PLANNING & ZONING COMMISSION

Wendy McClure
Commission Chair

p&z@ci.moscow.id.us

~Meeting Minutes~
February 28, 2018

Mike Ray
Staff Liaison

208.883.7008

http://www.ci.moscow.id.us/commissions/Pages/pz.aspx

The meeting was called to order at 7:00 PM.

MEMBERS PRESENT: Wendy McClure, Chair; Scott Gropp, Kurt Obermayr, Victoria Seever, Dennis Wilson.

MEMBERS ABSENT: Joel Hamilton, Robb Parish, Nels Reese

ALSO IN ATTENDANCE: Mike Ray, Staff Liaison; Anne Zabala, Council Liaison; Anne Peterson, Deputy City Clerk

1. Approval of minutes from February 14, 2018

RESULT:	**ACCEPTED [UNANIMOUS]**
MOVER:	Obermayr
SECONDER:	Gropp

Motion carried by acclamation.

2. Correspondence

Peterson demonstrated how to register for meeting notifications via the City's new website.

3. Transportation Commission Meeting Report

No report available. McClure encouraged Commissioners to sign up for Transportation Commission meeting notifications. She has discussed the communication concerns further with Community Development staff and they concluded that Joel Hamilton, as a Planning representative to the Transportation Commission, will help provide more thorough back-and-forth reporting between the P&Z and Transportation. Commissioners were also encouraged to sign up for Transportation Commission meeting notifications on the City's new website to keep abreast of what the Commission is currently discussing.

4. Public Comment

None.

5. Zoning Code Revisions – Agriculture/Forestry Zone

Ray reported the last step in completing the use table is updating the Ag/Forest zone. He said there are about nine AF properties within the city limits that city development has surrounded. The original intention had been to adopt Latah County's AF Zone but staff have found incompatible uses within the City. The Area of City Impact agreement with the County has not been renegotiated yet, so in the meantime staff recommend adding the existing AF zone into the use table, adopting the County's regulations *with some exceptions* and working with AF property owners within the City over the next several years to rezone to a more appropriate zoning district. He anticipates property owners will be amenable because the parcels are not being used as ag/forest anyway and if the City proposes the action the owner won't incur the rezone fees. Ray reviewed the differences between the current City and County AF zoning regulations and discussed with Commissioners the County uses that wouldn't be desired within the City.

6. Use Table Ordinance

Referring back to the question at the last meeting regarding grain elevators and agricultural storage, Ray showed the NAICS definitions which lists it as a subset of the primary "storage" category.

7. Shared Readings

McClure shared domestic migration statistics showing that Idaho is the fastest-growing state in the country, with the bulk of it being the Treasure Valley and retirees to the Kootenai County area. If this trend extends to Moscow it could likely affect the desired types of lots and housing. Quality of life issues can be facilitated with higher density development. Obermayr was interested in the factor of higher tax revenue over less infrastructure. He added that parking has typically been the issue with density discussions, but he thought autonomous car technology will affect future assumptions about parking space needs. Seever agreed with the article's point that densification must be done right or it can be very damaging to a neighborhood's character. She though the most positive development examples in the article of higher density included features that intentionally create a sense of community, but the infill in Moscow to date has typically been to simply cram in an apartment building behind an existing single family home. Obermayr agreed local projects probably tend to be driven by the student population that's looking for the lowest rents possible. It's important to have housing diversity and proximity to services to lessen the need for transportation. Ray said Tiempo Commons and Green Acres are two positive examples in Moscow of higher-density PUDs, but the question is whether to continue processing those types of developments as PUDs or to codify that type of higher density as allowed by right. The pros and cons of either route are the PUD route provides more control over the outcome and provides the opportunity for public input which may create better final products, but cons for the developer include increased costs and the risk that the project may not be approved. To better illustrate what various densities can look like, Ray presented photos of various Moscow subdivisions, both historic and newer, and how their density data compares.

The meeting adjourned at 8:50 p.m.

_____

Wendy McClure, Chair

ORDINANCE NO. 2018 -

AN ORDINANCE OF THE CITY OF MOSCOW, IDAHO, A MUNICIPAL CORPORATION OF THE STATE OF IDAHO; PROVIDING FOR THE AMENDMENT OF MOSCOW CITY CODE TITLE 4, CHAPTERS 1, 2, 3, 4, 6, 11 AND 12; PROVIDING FOR THE CONVERSION OF PORTIONS OF THE ZONING CODE FROM NARRATIVE TO TABLE FORMAT; PROVIDING FOR THE RESTRUCTURING OF CERTAIN CHAPTERS WITHIN THE ZONING CODE; PROVIDING FOR THE CONVERSION OF COMMERCIAL USE DEFINITIONS TO THE NORTH AMERICAN INDUSTRY CLASSIFICATION SYSTEM; PROVIDING FOR THE AMENDMENT OF THE SIGN REGULATIONS TO ACCOMMODATE LARGER PROPERTIES; PROVIDING FOR THE INSERTION OF DRIVE-THROUGH FACILITIES WITHIN THE SPECIFIC USE STANDARDS; PROVIDING FOR THE INSERTION OF ILLUSTRATIONS TO BETTER CONVEY REQUIREMENTS; PROVIDING THAT THE PROVISIONS OF THIS ORDINANCE BE DEEMED SEVERABLE; AND PROVIDING FOR THIS ORDINANCE TO BE IN FULL FORCE AND EFFECT FROM THE DATE OF ITS PASSAGE, APPROVAL AND PUBLICATION ACCORDING TO LAW.

TITLE 4, CHAPTER 1, RELATING TO GENERAL PROVISIONS OF MOSCOW ZONING CODE
TITLE 4, CHAPTER 2, RELATING TO ZONING DISTRICTS
TITLE 4, CHAPTER 3, RELATING TO PERMITTED LAND USES
TITLE 4, CHAPTER 4, RELATING TO BULK AND PLACEMENT REGULATIONS
TITLE 4, CHAPTER 6, RELATING TO MOSCOW SIGN CODE
TITLE 4, CHAPTER 11, RELATING TO ADMINISTRATION AND ENFORCEMENT

WHEREAS, the Zoning Code is currently in a narrative format and there are significant inconsistencies between zoning districts as well as inconsistencies with defined terms and use terms; and

WHEREAS, the City wishes to convert certain portions of the Zoning Code to table format for consistent use terms, side by side comparision of districts, a clean list of terms which are defined, and a more compact document due to the reduction of redundant language; and

WHEREAS, there is currently no correlation to outside reference to assist with determinations of use allowance or comparable uses; and

WHEREAS, the City wishes to convert the commercial uses to the North American Industry Classification System, which is the standard used by the United States and other countries to classify business establishments; and

WHEREAS, the City wishes to amend the sign regulations in order to provide greater opportunities for larger sized properties; and

WHEREAS, the City wishes to insert drive-through facility standards into the Zoning Code to ensure predicably and safety when developing such facilities; and

DRAFT

WHEREAS, the City wishes to insert illustrations be better explain certain requirements; and

WHEREAS, on _____, the Planning and Zoning Commission conducted a public hearing upon the amendments contained herein and recommended approval to the City Council; and

WHEREAS, on _____, the City Council conducted a public hearing and considered and adopted the amendments contained herein;

NOW, THEREFORE, BE IT ORDAINED BY THE MAYOR AND COUNCIL OF THE CITY OF MOSCOW, IDAHO, AS FOLLOWS:

SECTION 1: That Moscow City Code Title 4, Chapter 1 be amended as follows:

Sec. 1-1. Title.

Title 4, Land Use Regulations, of the Code, the Chapters and subparts contained therein, and its appurtenant maps shall be known as the "Moscow Zoning Code." The words "the Zoning Code" or "this Zoning Code" shall mean all or any part of the Moscow Zoning Code.

Sec. 1-2. Authority.

This Zoning Code is adopted pursuant to the authority conferred by Chapter 65, Title 67 and Chapter 13, Title 50 of the Idaho Code and to the home rule authority of Idaho cities granted by Article 12, Section 2 of the Idaho Constitution and Section 302 of Title 50, Idaho Code.

Sec. 1-3. Purpose.

The provisions of this Zoning Code shall be applied to fulfill the following purposes:

A. Promote the health, safety and general welfare of the Moscow community.
B. Encourage the most appropriate use of land within the City's jurisdiction to protect the natural and human environment.
C. Mitigate the effects of incompatible land uses upon neighborhoods, public facilities, and the community as a whole.
D. Provide for public improvements which are serviceable and durable and which provide for effective service delivery by all public agencies.
E. Preserve the positive aspects of existing neighborhoods while improving the neighborhoods which have fallen into disrepair.
F. Provide adequate public services and community amenities in newly developing neighborhoods.
G. Further the goals of the enabling statutes which grant authority to the City to enact ordinances regulating land use and development.

Sec. 1-4. Adoption of Comprehensive Plan.

The Comprehensive Plan of the City of Moscow is hereby adopted by reference as the policy guide for the application of the provisions of this Title. The words "the Plan" or "this Plan" shall mean the Comprehensive Plan of the City of Moscow throughout this Title. ~~Three~~One (1) copy~~ies~~ of the Plan, as it now exists and may be subsequently amended, shall be retained by the Clerk, available for public inspection during regular City business hours.

DRAFT

~~**Sec. 1-5. Establishment of Zoning Districts.**~~

~~Pursuant to the policies contained in this Zoning Code and the Plan, the City is divided into zoning districts as depicted upon the Moscow Zoning Map which is hereby adopted and made a part of this Title and Ordinance, as though fully set out herein. Zoning districts depicted on the Moscow Zoning Map shall correspond to the zoning districts established by this Zoning Code.~~

Sec. 1-5. Scope of Zoning Code.

This Zoning Code shall apply to buildings, structures, and lands situated within the City and to those buildings, structures and lands hereafter annexed to the City, and to those buildings, structures and lands situated within the Area of City Impact. The regulations set forth in this Zoning Code for each zoning district shall be minimum standards and shall be applied uniformly to each class or kind of structure or land, particularly as follows:

A. No building, structure, or land shall hereafter be used or occupied, and no building or structure or part thereof shall hereafter be erected, constructed, reconstructed, moved, or structurally altered except in conformity with all of the regulations herein specified for the zoning district in which it is located.

B. No building or other structure shall hereafter be erected or altered:
   1. to exceed the height or bulk as herein required; or
   2. to accommodate or house a greater number of families than herein allowed; or
   3. to have narrower or smaller rear yards, front yards, side yards, or other open spaces than herein required; or
   4. in any other manner contrary to the provisions of this Zoning Code.

C. No part of a yard, open space, or off-street parking or loading space required in connection with any building or use for the purpose of complying with this Zoning Code, shall be included as part of a yard, open space, or off-street parking or loading space similarly required for any other building or use, unless otherwise provided herein.

D. No yard or lot existing at the time of passage of this Zoning Code shall be reduced in dimension or area below the minimum requirements set forth herein. Yards or lots created after the effective date of this Zoning Code shall meet at least the minimum requirements established by this Zoning Code.

Sec. 1-6. Definitions.

For the purpose of this Zoning Code, certain words and terms used herein are defined as follows:

A. All words used in the present tense include the future tense; all words in the plural number include the singular number, and all words in the singular number include plural number; unless the natural construction of the wording indicates otherwise. The word "lot" includes the word "plot"; the word "building" includes the word "structure"; and the word "shall" is mandatory and not directory. The word "used" shall be deemed also to include "designed, intended or arranged to be used."

B. Where applicable, uses have been named and defined using the 2012 North American Industry Classification System (NAICS) which is the standard used by the Federal government in classifying business establishments. The uses that are defined by NAICS will have an associated NAICS code in parenthesis following the named use (i.e., *Bowling Centers (NAICS 713950)*). In many cases, this Code has used an abbreviated definition, which is further

DRAFT

defined using the 2012 NAICS Manual that is published on the United States Census Bureau website. Many NAICS subsectors include multiple industries that are included within the subsector. In some circumstances, certain industries have specifically been excluded from subsectors because of incompatibility with certain zoning districts.

C. Unless otherwise specified, all distances shall be measured horizontally.

1. *Accessory Dwelling Unit.* A secondary dwelling unit that is accessory to a single family dwelling on a single lot, containing complete housekeeping facilities and which is added to, created within, or detached from the principal dwelling unit and subject to the Specific Use Standards of this Code.

2. *Accessory Use.* A minor or second use for which a lot, structure or building is designed or employed in conjunction with but subordinate to its primary use. The term is synonymous with "secondary use."

3. *Affected Person.* A person who shows to the City, by a preponderance of evidence, that such person has an interest which may be adversely affected by the issuance or denial of a permit authorizing development or by a decision of the City.

4. *Agencies, Brokerages and Other Insurance Related Activities (NAICS 5242).* Establishments primarily engaged in (1) acting as agents (i.e., brokers) in selling annuities and insurance policies; or (2) providing other employee benefits and insurance related services, such as claims adjustment and third party administration.

5. *Agriculture, Animal Production and Aquaculture (NAICS 112).* Establishments that raise or fatten animals for the sale of animals or animal products and/or raise aquatic plants and animals in controlled or selected aquatic environments for the sale of aquatic plants, animals, or their products.

6. *Agriculture, Crop Production (NAICS 111).* Establishments such as farms, orchards, groves, greenhouses, and nurseries, primarily engaged in growing crops, plants, vines, or trees and their seeds.

7. *Alley.* A passageway open to public travel which affords generally a secondary means of vehicular access to abutting lots and is not intended for general traffic circulation.

8. *Alterations.* A change or rearrangement of the structural parts of existing facilities, or an enlargement by extending the sides or increasing the height or depth, or the moving from one (1) location to another. In buildings for business, commercial, industrial or similar uses, the installation or rearrangement of partitions affecting more than one-third (1/3) of a single floor area shall be considered an alteration.

9. *Animal Slaughtering and Processing (NAICS 31161).* Establishments primarily engaged in one (1) or more of the following: (1) slaughtering animals; (2) preparing processed meats and meat byproducts; and (3) rendering and/or refining animal fat, bones, and meat scraps. This industry includes establishments primarily engaged in assembly cutting and packing of meats (i.e., boxed meats) from purchased carcasses.

10. *Antenna Tower.* A structure to house or hold a device which transmits or receives television, radio, or telephone communications but excluding those which are used as accessory to a residential use.

11. *Amusement and Recreation Industries (NAICS 713990).* Establishments (except amusement parks and arcades; gambling industries; golf courses and country clubs; skiing facilities; marinas; fitness and recreational sports centers; and bowling centers) primarily engaged in providing recreational and amusement services.

DRAFT

12. *Archery/Shooting Ranges.* A controlled area of activity, located indoors, specifically designed for the discharging of projectiles at targets.

13. *Automobile and RV Dealers (NAICS 4411).* Establishments primarily engaged in retailing new and used automobiles and light trucks, such as sport utility vehicles, and passenger and cargo vans.

14. *Automotive Repair and Maintenance (NAICS 8111).* Establishments involved in providing repair and maintenance services for automotive vehicles, such as passenger cars, trucks, and vans, and all trailers. Establishments in this industry group employ mechanics with specialized technical skills to diagnose and repair the mechanical and electrical systems for automotive vehicles, repair automotive interiors, and paint or repair automotive exteriors.

15. *Basement.* That portion of a building partly underground and having at least one-half (1/2) of its height more than five feet (5') below the adjoining finish grade.

16. *Bed and Breakfast Inn.* A building occupied by its owner in which lodging and breakfast or meals are provided for not more than six (6) roomers for compensation on less than a weekly basis.

17. *Bedroom.* A room within an apartment unit other than a living room, kitchen, bathroom, eating area or utility room which may be used for sleeping purposes.

18. *Boarding House.* A building occupied by its owner in which not more than six (6) roomers, lodgers and/or boarders are housed or fed for compensation on a weekly or longer basis.

19. *Bowling Centers (NAICS 713950).* Establishments engaged in operating bowling centers. These establishments often provide food and beverage services.

20. *Broadcasting (NAICS 515).* Establishments that create content or acquire the right to distribute content and subsequently broadcast the content.

21. *Building Area.* The total ground coverage of a building or structure which provides shelter measured from the outside of its external walls or supporting members or from a point four feet (4') in from the outside edge of a cantilevered roof, whichever covers the greatest area.

22. *Building or Structure.* "Building" means any structure having a roof, but excluding all forms of vehicles even though immobilized. When a use is required to be within a building, or where special authority granted pursuant to this Zoning Code requires that a use shall be within an entirely enclosed building, then the term "building" means one so designed and constructed that all exterior walls of the structures shall be solid from the ground to the roof line, and shall contain no openings except for windows and doors which are designed so that they may be closed.

23. *Building or Structure, Accessory.* A subordinate building or structure, the use of which is incidental to the use of the main building on the same lot, attached to or located adjacent to a home, or on the same lot, including awnings, steps, porches, carports, garages, and storage buildings. Size limitations contained within this Code pertaining to accessory structures, such as private garages and workshops, shall apply to the building footprint (the land area occupied by such accessory structure).

24. *Building or Structure, Detached.* A building surrounded on all sides by open space and which is located more than two feet (2') from the principal/primary structure.

25. *Building Height.* The vertical distance measured from the average elevation of the proposed finished grade at the front of the building to the highest point on the roof or parapet wall.

DRAFT

26. *Building Line.* The line of that face or corner or part of a building nearest the property line.

27. *Building Material Sales and Garden Equipment/Supplies (NAICS 444).* Establishments that retail new building material and garden equipment and supplies from fixed point-of-sale locations. Establishments in this subsector have display equipment designed to handle lumber and related products and garden equipment and supplies that may be kept either indoors or outdoors under covered areas.

28. *Business, Professional, Political, Social Advocacy, Grantmaking, and Similar Organizations (NAICS 8132, 8133, 8139).* See individual NAICS sectors for definitions.

29. *Cemeteries and Crematories (NAICS 812220).* Establishments primarily engaged in operating sites or structures reserved for the interment of human or animal remains and/or cremating the dead.

30. *Child Care Facility.* Any business, place of business or establishment which provides Child Care. This definition includes any premises, location, play area, playground, organization, institution, partnership, school, home, residence, dwelling, group home, foster home, place or facility whether such business or concern calls itself a mini school, kindergarten, nursery, pre-school, club, cooperative, mother's-day-out, learning center or any other business whose activity is the same or substantially similar to a Child Care operation or concern.

a. The definition of Child Care Facility shall not include:

(1) Any institution, school or facility operated by or under the direction of the State of Idaho, by any agency or political subdivision of the State of Idaho, or by any other public body or public entity.

(2) Any elementary, junior high, or high school licensed and designated as such by the State of Idaho.

(3) Any medical or hospital facility operated pursuant to license issued by the State of Idaho.

b. There shall be four (4) classifications of Day Care Facility:

(1) Family Child Care Facility: A Child Care Facility providing Child Care for five (5) or fewer children;

(2) Group Child Care Facility: A Child Care Facility providing Child Care for six (6) to twelve (12) children;

(3) Small Child Care Facility: A Child Care Facility providing Child Care for thirteen (13) to twenty (20) children; and

(4) Large Child Care Facility: A Child Care Facility providing Child Care for twenty-one (21) or more children.

(5) The number of children in each of the above classifications (1) through (4) may be increased with the addition of school-aged children (first grade and up) from 3:00 p.m. until 6:00 p.m. on weekdays, on teacher work days, and on snow days, without affecting the classification level.

31. *Civic and Social Organizations (NAICS 813410).* Establishments primarily engaged in promoting the civic and social interests of their members. Establishments in this industry may operate bars and restaurants for their members.

32. *Coffee/Espresso Stand.* A beverage service establishment where drive-up window service is the primary customer access.

DRAFT

33. *Commercial and Industrial Machinery and Equipment Repair and Maintenance (NAICS 811310).* Establishments primarily engaged in the repair and maintenance of commercial and industrial machinery and equipment.

34. *Commercial Banking (NAICS 522110).* Establishments primarily engaged in accepting demand and other deposits and making commercial, industrial, and consumer loans. Commercial banks and branches of foreign banks are included in this industry.

35. *Community Center.* A building or group of buildings in which members of a community may gather for group activities, social support, educational activities, cultural activities, and other purposes. They may sometimes be open for the whole community or for a specialized group within the greater community.

36. *Conditional Use.* "Conditional use" means a use permitted in one (1) or more zoning district as defined by this Zoning Code but which, because of characteristics peculiar to such use, or because of size, technological processes or equipment, or because of the exact location with reference to surroundings, streets and existing improvements or demands upon public facilities, requires a special degree of control to make uses consistent with and compatible to other existing or permissible uses in the same zoning district(s).

37. *Conditional Use Permit.* "Conditional Use Permit" means the documented evidence of authority granted by the Board of Adjustment to locate a conditional use at a particular location.

38. *Construction Contractor Services (NAICS 238).* Establishments whose primary activity is performing specific activities (e.g., pouring concrete, site preparation, plumbing, painting, and electrical work) involved in building construction or other activities that are similar for all types of construction, but that are not responsible for the entire project.

39. *Consumer Goods Rental (NAICS 5322).* Establishments primarily engaged in renting personal and household-type goods. Establishments classified in this industry group generally provide short-term rental although in some instances, the goods may be leased for longer periods of time. These establishments often operate from a retail-like or store-front facility.

40. *Correctional Institutions (NAICS 922140).* Government establishments primarily engaged in managing and operating correctional institutions. The facility is generally designed for the confinement, correction, and rehabilitation of adult and/or juvenile offenders sentenced by a court.

41. *Credit Unions (NAICS 522130).* Establishments primarily engaged in accepting members' share deposits in cooperatives that are organized to offer consumer loans to their members.

42. *Dance Halls.* Establishments where amplified sound or music is provided for entertainment.

43. *Data Processing, Hosting, and Related Services (NAICS 518).* Establishments that provide the infrastructure for hosting and/or data processing services.

44. *Dormitory.* A building typically located at a college or university, containing a number of private or semiprivate rooms for residents, usually along with common bathroom facilities and recreation areas.

45. *Drinking Places (Alcoholic Beverages) (NAICS 722410).* Establishments known as bars, taverns, nightclubs, or drinking places primarily engaged in preparing and serving alcoholic beverages for immediate consumption. These establishments may also provide limited food services.

DRAFT

46. *Dwelling, Single Family.* A detached building or manufactured home designed for, and occupied exclusively by, one (1) family. The classification "single family dwelling" shall include any home in which eight (8) or fewer unrelated mentally and/or physically handicapped or elderly persons reside; and which is supervised. Resident staff, if employed, need not be related to each other or to any of the mentally or physically handicapped or elderly persons residing in the home. No more than two (2) such staff shall reside in the dwelling at any one (1) time.

47. *Dwelling, Townhouse.* A structure which contains three (3) or more attached single family dwelling units that share a single common wall and where each unit is located upon a separate platted lot to allow for individual sale.

48. *Dwelling, Twinhome.* A structure which contains two (2) attached single family dwelling units that share a single common wall and where each unit is located upon a separate platted lot to allow for individual sale.

49. *Dwelling, Two (2) Family.* A building containing two (2) kitchens and designed to be occupied by two (2) families living independently of each other.

50. *Dwelling, Multi-Family.* A building designed to house three (3) or more families living independently of each other and having one (1) yard in common.

51. *Dwelling Unit.* A building or portion thereof providing complete housekeeping facilities for one (1) family. The term "dwelling" shall not be deemed to include motel, hotel, tourist home, bed and breakfast inn, or boarding house.

52. *Educational Services (NAICS 611).* Establishments that provide instruction and training in a wide variety of subjects. The instruction and training is provided by specialized establishments, such as schools, colleges, universities, and training centers.

53. *Electronic and Precision Equipment Repair and Maintenance (NAICS 8112).* Establishments primarily engaged in repairing electronic equipment, such as computers and communications equipment, and highly specialized precision instruments.

54. *Established Grade.* The high point of the sidewalk at the front or side lot line as established by the City.

55. *Fairgrounds.* An area where outdoor fairs, circuses, exhibitions, etc. are held.

56. *Family.*

a. For purposes of this "family" definition:

(1) "related" shall mean persons related by blood, marriage, adoption, and/or guardianship or other duly authorized relationship, and

(2) "family" shall not mean any society, club, fraternity, sorority, association, lodge, federation, bed and breakfast inn, boarding house, residential rental unit, or other like use or organization, and

(3) there shall be no more than one (1) "family" per dwelling unit, unless otherwise permitted by this Code.

(4) "living together as a single housekeeping unit" shall mean where all occupants of the dwelling unit enjoy a common right to use the entire dwelling, despite informal arrangements among members to designate certain areas as individual sleeping spaces, and where such persons share household living arrangements, including, but not limited to, rental or mortgage payments, utility payments, groceries, chores, maintenance of the premises, and common sanitary, living, and cooking supplies and/or facilities.

(5) "related by blood" shall mean persons related in any combination of the following: parents, step-parents, children, step-children, siblings, step-siblings, half-siblings,

DRAFT

uncles, aunts, nephews, nieces, grandparents, grandchildren, great grandparents, great grandchildren, and first cousins.

b. One (1) or more related persons living together as a single housekeeping unit in a dwelling unit; or

c. not more than four (4) persons living together as a single housekeeping unit in a dwelling unit, when one (1) or more of them is not related to any other person in such dwelling unit; or

d. two (2) persons who are not related and any number of additional persons related to either of such two (2) unrelated persons, as long as all persons are living together as a single housekeeping unit in such dwelling unit; or

e. eight (8) or fewer unrelated mentally and/or physically handicapped or elderly persons reside; and which is supervised. Resident staff, if employed, need not be related to each other or to any of the mentally or physically handicapped or elderly persons residing in the home. No more than two (2) such staff shall reside in the dwelling at any one (1) time.

57. *Farm and Garden Machinery and Equipment Merchant Wholesalers (NAICS 423820).* Establishments primarily engaged in the merchant wholesale distribution of specialized machinery, equipment, and related parts generally used in agricultural, farm, and lawn and garden activities.

58. *Fitness Centers (NAICS 713940).* Establishments primarily engaged in operating fitness and recreational sports facilities featuring exercise and other active physical fitness conditioning or recreational sports activities, such as swimming, skating, or racquet sports.

59. *Floor Area.* The sum of the gross horizontal areas of the floors of a building or buildings, measured from the exterior faces of exterior walls and from the center line of division walls. Floor area shall include: basement space, elevator shafts and stairwells at each floor, mechanical equipment rooms or attic spaces with headroom of seven feet (7') six inches (6"), exterior steps or stairs, terraces, breezeways and open spaces.

60. *Fraternity, Sorority Or Student Cooperative.* A building occupied by and maintained exclusively for students affiliated with an academic or professional college or university, or other recognized institution of higher learning and regulated by such institution.

61. *Functional Open Space.* Land within a development which is permanently reserved as open space, free from permanent structures, useful for recreational or social use by the residents of the development, or others; such space shall not include streets, roadways or parking areas.

62. *Funeral Homes and Funeral Services (NAICS 812210).* Establishments primarily engaged in preparing the dead for burial or interment and conducting funerals (i.e., providing facilities for wakes, arranging transportation for the dead, selling caskets and related merchandise). Funeral homes combined with crematories are included in this industry.

63. *Garage and/or Workshop, Private.* An enclosed space for the storage of one (1) or more private vehicles for residents of the premises.

64. *Garden, Accessory.* The use of land for growing of produce and/or plants that is accessory to a permitted principal use, and where the produce from the garden is primarily grown for the consumption and use or donation by the person(s) residing or employed upon the subject property. Accessary Gardens may include the keeping of animals and fowl as permitted by this Code. On-site retail sales are not permitted in association with Accessary Gardens unless specifically permitted under this Code.

DRAFT

65. *Garden, Community*. The collective use of land for growing of produce and/or plants conducted by a group of people, where the site is commonly divided into plots that individuals may rent for the season, where the produce or plant materials grown upon the site are intended for consumption, use, or donation by the person(s) cultivating the land. On-site retail sales are not permitted in association with Community Gardens unless specifically permitted under this Code.

66. *Garden, Market*. The use of land for growing of produce and/or plants that is conducted by a single individual or a group of individuals where the produce or plant materials grown upon the site are intended to be sold for consumption by others. Market Gardens may include the keeping of animals and fowl as permitted by this Code. On-site retail sales are not permitted in association with Market Gardens unless specifically permitted under this Code.

67. *Gasoline Stations (NAICS 447)*. Establishments that retail automotive fuels (e.g., gasoline, diesel fuel, gasohol, alternative fuels) and automotive oils or retail these products in combination with convenience store items. These establishments have specialized equipment for the storage and dispensing of automotive fuels.

68. *General Freight Trucking (NAICS 4841)*. Establishments primarily engaged in providing general freight trucking.

69. *Golf Courses and Country Clubs (NAICS 713910)*. Establishments primarily engaged in operating golf courses (except miniature) which also may include dining facilities and other recreational facilities that are known as country clubs. These establishments often provide food and beverage services, equipment rental services, and golf instruction services.

70. *Golf Facilities, Miniature*. Establishments engaged in operating a novelty golf game played with a putter on a miniature course usually having tunnels, bridges, sharp corners, and obstacles. These establishments often provide food and beverage services.

71. *Government Office Buildings*. A building or rooms in which the business of a department of government administration is carried out. Government office buildings include, but are not limited to, courthouses, local city government offices, and libraries.

72. *Habitable Floor*. Any floor usable for living purposes, which includes working, sleeping, eating, cooking or recreation, or a combination thereof. A floor used only for storage purposes is not a "habitable floor."

73. *Health Care Services (Ambulatory) (NAICS 621)*. Establishments that provide health care services directly or indirectly to ambulatory patients and do not usually provide inpatient services. Health practitioners in this subsector provide outpatient services, with the facilities and equipment not usually being the most significant part of the production process.

74. *Hospitals (NAICS 622)*. Establishments that provide medical, diagnostic, and treatment services that include physician, nursing, and other health services to inpatients and the specialized accommodation services required by inpatients. Hospitals may also provide outpatient services as a secondary activity. Establishments in the Hospitals subsector provide inpatient health services, many of which can only be provided using the specialized facilities and equipment that form a significant and integral part of the production process.

75. *Hotels and Motels (NAICS 721110)*. Establishments primarily engaged in providing short-term lodging in facilities known as hotels, motor hotels, resort hotels, and motels. The establishments in this industry may offer food and beverage services, recreational services, conference rooms and convention services, laundry services, parking, and other services.

76. *Kitchen*. Any rooms used or intended or designed to be used for cooking and/or preparation of food.

DRAFT

77. *Large Retail Establishment.*

a. A single retail establishment; or any combination of retail establishments in a single building with shared private off-street parking (such as a shopping mall); or any combination of retail establishments in separate and abutting buildings which are planned, constructed, and/or managed as a single property with shared private off-street parking (such as a shopping center); and

b. Which is greater than forty thousand (40,000) square feet of gross floor area.

78. *Laundries and Drycleaners (NAICS 812310).* Establishments primarily engaged in (1) operating facilities with coin-operated or similar self-service laundry and dry cleaning equipment for customer use on the premises; and/or (2) supplying and servicing coin-operated or similar self-service laundry and dry cleaning equipment for customer use in places of business operated by others, such as apartments and dormitories.

79. *Lot.* A lot, in the meaning of this Zoning Code, is a single tract of land, no matter how legally described, whether by metes and bounds and/or by lot or lots and block designation as in a recorded plat, which at the time of applying for a building permit is designated by its owner or developer as the tract to be used, developed or built upon as a unit of land under single ownership or control and assigned to the particular use for which the building permit is being secured and having frontage on or access to a public street.

80. *Lot Area.* The total horizontal area within the boundary lines of a lot, excluding areas of dedicated and prescriptive public or railroad rights-of-way. The lot area shall include all utility easements and any flag pole portion of a flat lot.

81. *Lot, Corner.* A lot at the junction of and fronting on two (2) or more intersecting streets.

82. *Lot, Depth.* The mean dimension of the lot from the front street line to the rear line.

83. *Lot, Flag.* A lot with access provided to the part of the lot designated for use as a building site by a narrow corridor.

84. *Lot, Interior.* A lot fronting on one (1) street.

85. *Lot Line, Front.* The front lot line is the property boundary that abuts a public or private street; the front lot line for an undeveloped corner lot is either one (1) of the property boundaries that abuts a public or private street, as selected by the property owner.

86. *Lot Line, Rear.* The boundary line of a lot that is opposite and most distant from the front lot line.

87. *Lot Line, Side.* Any lot line not a rear lot line or a front lot line shall be considered a side lot line.

88. *Lot Line, Street Side.* The street side lot line is the property boundary on a corner lot that abuts a public or private street which is not considered the front lot line.

89. *Lot, Through.* A lot fronting on two (2) streets that do not intersect on the parcel's lot lines.

90. *Lot, Width.* The dimension of the lot line at the street, or in an irregular shaped lot the dimension across the lot at the building line, or in a corner lot the narrow dimension of the lot at a street or building line.

91. *Manufactured (Mobile) Home Dealers (NAICS 453930).* Establishments primarily engaged in retailing new and/or used manufactured homes (i.e., mobile homes), parts, and equipment.

92. *Manufactured Home.* A structure as defined by Idaho Code Section 39-4105(14) and which meets the following additional standards:

DRAFT

a. The manufactured home shall be multisectional and enclose a space of not less than one thousand (1,000) square feet; and

b. The manufactured home shall be placed on an excavated and backfilled foundation and enclosed at the perimeter such that the home is located not more than twelve inches (12") above grade; and

c. The manufactured home shall have a pitched roof of at least three feet (3') in vertical rise for each twelve feet (12') in horizontal run; and

d. The manufactured home shall have any exterior siding and roofing material which is approved by the City for site-built homes; and

e. The manufactured home shall not be permitted within an area defined as a historic district under Section 67-4607, Idaho Code.

93. *Manufacturing, Aerospace Product and Parts Manufacturing (NAICS 3364).* Establishments primarily engaged in one (1) or more of the following: (1) manufacturing complete aircraft, missiles, or space vehicles; (2) manufacturing aerospace engines, propulsion units, auxiliary equipment or parts; (3) developing and making prototypes of aerospace products; (4) aircraft conversion (i.e., major modifications to systems); and (5) complete aircraft or propulsion systems overhaul and rebuilding (i.e., periodic restoration of aircraft to original design specifications).

94. *Manufacturing, Beverage (NAICS 3121).* Establishments primarily engaged in manufacturing soft drinks, ice, and purifying and bottling water; manufacturing brewery products; winery products; and distillery products. Also included is (1) the artificially carbonating of water; (2) the brewing of beer, ale, malt liquors, and nonalcoholic beer; (3) growing of the grapes, and the manufacturing of wine and brandy, or making of wine or brandy from purchased materials, and the blending of wines and brandies; and (4) the distilling of potable liquors (except brandies) and the blending of liquors and other ingredients.

95. *Manufacturing, Computer and Electronic Product (NAICS 334).* Establishments that manufacture computers, computer peripherals, communications equipment, and similar electronic products, and establishments that manufacture components for such products.

96. *Manufacturing, Electrical Equipment, Appliance, and Component (NAICS 335).* Establishments that manufacture products that generate, distribute and use electrical power.

97. *Manufacturing, Light.* The manufacturing, compounding, treatment, processing, assembling, packaging, or testing of goods or equipment that is primarily indoors and which does not present any adverse effect upon surrounding property from smoke, noise, vibration, dust, glare, air pollution, or water pollution.

98. *Manufacturing, Medical Equipment and Supplies (NAICS 3391).* Establishments primarily engaged in manufacturing medical equipment and supplies.

99. *Manufacturing, Pharmaceutical and Medicine (NAICS 3254).* Establishments primarily engaged in one (1) or more of the following: (1) manufacturing biological and medicinal products; (2) processing (i.e., grading, grinding, and milling) botanical drugs and herbs; (3) isolating active medicinal principals from botanical drugs and herbs; and (4) manufacturing pharmaceutical products intended for internal and external consumption in such forms as ampoules, tablets, capsules, vials, ointments, powders, solutions, and suspensions.

100. *Manufacturing, Heavy.* The extraction, processing or treatment of raw materials, or the manufacturing, compounding, treatment, processing, assembling, packaging, testing, handling, or storage of explosive or radioactive materials or products.

DRAFT

101. *Motorized Vehicle.* A motor driven conveyance capable of carrying one (1) or more passengers.

102. *Movie Theaters (NAICS 512131).* Establishments primarily engaged in operating motion picture theaters (except drive-ins) and/or exhibiting motion pictures or videos at film festivals, and so forth.

103. *Museums and Art Galleries (NAICS 712110).* Establishments primarily engaged in the preservation and exhibition of objects of historical, cultural, and/or educational value.

104. *Nonconforming Building Use.* The use of a building or structure which was a lawful use at the time this Zoning Code was passed but which use, because of the passage of this Zoning Code, does not conform to the regulations of the zoning district in which the use exists.

105. *Nonconforming Use.* A use which lawfully occupied a building or land at the time this Zoning Code becomes effective and which does not conform with the use regulations of the zoning district in which it is located.

106. *Nursing and Residential Care Facilities (NAICS 623).* Establishments that provide residential care combined with either nursing, supervisory, or other types of care as required by the residents. In this subsector, the facilities are a significant part of the production process and the care provided is a mix of health and social services with the health services being largely some level of nursing services.

107. *Off-Street Parking.* Parking facilities for motor vehicles located on private property.

108. *Parking Lots and Garages (NAICS 812930).* Establishments primarily engaged in providing parking space for motor vehicles, usually on an hourly, daily, or monthly basis and/or valet parking services. For the purposes of this Code, a parking lot is an off-street parking facility designed for more than four (4) parking spaces.

109. *Personal and Household Goods Repair and Maintenance (NAICS 8114).* Establishments primarily engaged in home and garden equipment and appliance repair and maintenance; reupholstery and furniture repair; footwear and leather goods repair; and other personal and household goods repair and maintenance.

110. *Personal Care Services (NAICS 8121).* Establishments such as barber and beauty shops, that provide appearance care services to individual consumers.

111. *Parking Space.* A usable space for the storage of one (1) passenger automobile or commercial vehicle, exclusive of access drives, aisles, or ramps, within a public or private parking lot or a building that meets the parking standards of this Code.

112. *Pet Care Services (NAICS 812910).* Establishments primarily engaged in providing pet care services (except veterinary), such as boarding, grooming, sitting, and training pets.

113. *Planned Unit Development (PUD).* The PUD is characterized by a unified site design for a number of housing units and/or other buildings where clustering of buildings and utilization of open space will allow for enhanced land use. Through a PUD, a development may be planned as a unit and the density of use may be calculated on the basis of the entire project, rather than on a lot by lot basis. Individual uses and structures in a PUD need not comply with specific building locations, height, building size, floor area, lot size and open space requirements of the underlying basic zone provided that requirements set forth herein are complied with, and the development as a whole is harmonious with the community, particularly adjacent land uses.

114. *Principal Use.* The primary or predominant use(s) to which a property is or may be devoted.

DRAFT

115. *Professional, Scientific, and Technical Services (NAICS 541).* Establishments engaged in processes where human capital is the major input. These establishments make available the knowledge and skills of their employees, often on an assignment basis, where an individual or team is responsible for the delivery of services to the client. The individual industries of this subsector are defined on the basis of the particular expertise and training of the services provider.

116. *Public Service and Utility Facility.* Public facilities necessary to serve the neighborhood or community, including, but not limited to, fire stations, police stations, national guard armories, fire training facilities, pumping stations, electrical substations, and telephone switching facilities.

117. *Publishing Industries (except Internet) (NAICS 511).* Establishments engaged in the publishing of newspapers, magazines, other periodicals, and books, as well as directory and mailing list and software publishing.

118. *Public Utility.* A public service corporation performing some public service and subject to special governmental regulations, or a governmental agency performing similar public services, the services by either of which are paid for directly by the recipients thereof. Such services shall include, but are not limited to, water supply, electric power, gas and transportation for persons and freight.

119. *Railroad Yards (NAICS 488210).* Establishments primarily engaged in providing specialized services for railroad transportation, including servicing, routine repairing (except factory conversion, overhaul or rebuilding of rolling stock), and maintaining rail cars; loading and unloading rail cars; and operating independent terminals.

120. *Real Estate Services (NAICS 531).* Establishments that are primarily engaged in renting or leasing real estate to others; managing real estate for others; selling, buying, or renting real estate for others; and providing other real estate related services, such as appraisal services.

121. *Religious Facilities (NAICS 813110).* Establishments primarily engaged in (1) operating religious organizations, such as churches, religious temples, and monasteries; and/or (2) establishments primarily engaged in administering an organized religion or promoting religious activities.

122. *Rental and Leasing Services (NAICS 532).* Establishments that provide a wide array of tangible goods, such as automobiles, computers, consumer goods, and industrial machinery and equipment, to customers in return for a periodic rental or lease payment.

123. *Restaurants (NAICS 72251).* Establishments primarily engaged in one (1) of the following: (1) providing food services to patrons who order and are served while seated (i.e., waiter/waitress service), and pay after eating; (2) providing food services to patrons who generally order or select items (e.g., at a counter, in a buffet line) and pay before eating; or (3) preparing and/or serving a specialty snack (e.g., ice cream, frozen yogurt, cookies) and/or nonalcoholic beverages (e.g., coffee, juices, sodas) for consumption on or near the premises.

124. *Retail Sales (NAICS 44-45).* Establishments engaged in retailing merchandise, generally without transformation, and rendering services incidental to the sale of merchandise.

125. *Riding Stables.* Establishments where horses are kept for riding, driving, or stabling for compensation.

126. *RV (Recreational Vehicle) Parks and Campgrounds (NAICS 721211).* Establishments primarily engaged in operating sites to accommodate campers and their equipment, including tents, tent trailers, travel trailers, and RVs (recreational vehicles). These establishments may

DRAFT

provide access to facilities, such as washrooms, laundry rooms, recreation halls and playgrounds, stores, and snack bars.

127. *Savings Institutions (NAICS 522120).* Establishments primarily engaged in accepting time deposits, making mortgage and real estate loans, and investing in high-grade securities. Savings and loan associations and savings banks are included in this industry.

128. *Sawmills (NAICS 321113).* Establishments primarily engaged in sawing dimension lumber, boards, beams, timbers, poles, ties, shingles, shakes, siding, and wood chips from logs or bolts.

129. *Scrap Yards/Material Recycling (NAICS 423930).* Establishments primarily engaged in the merchant wholesale distribution of automotive scrap, industrial scrap, and other recyclable materials. Included in this industry are auto wreckers primarily engaged in dismantling motor vehicles for the purpose of wholesaling scrap.

130. *Securities, Commodity Contracts, and Other Financial* Investments *and Related Activities (NAICS 523).* Establishments that are primarily engaged in one (1) of the following: (1) underwriting securities issues and/or making markets for securities and commodities; (2) acting as agents (i.e., brokers) between buyers and sellers of securities and commodities; (3) providing securities and commodity exchange services; and (4) providing other services, such as managing portfolios of assets; providing investment advice; and trust, fiduciary, and custody services.

131. *Self-Storage Facilities (NAICS 531130).* Establishments primarily engaged in renting or leasing space for self-storage. These establishments provide secure space (i.e., rooms, compartments, lockers, containers, or outdoor space) where clients can store and retrieve their goods.

132. *Setback.* The distance that buildings or uses must be removed from their lot lines. Setbacks shall be measured, where applicable, from proposed or actual public or private street right-of-way lines. When measuring front and street side yard setbacks for lots that abut a Local Residential Street, as designated upon the Thoroughfare Plan within the City's Comprehensive Plan, the front and street side setbacks shall be measured from the building lot side of the public sidewalk to the nearest point of the wall of the main building on the lot. In such cases where sidewalks do not exist in the front or street side of a building lot, the Zoning Administrator shall determine the point of measurement based upon the location of adjacent principal structures, the likelihood of future sidewalk installation, and the anticipated location of such future sidewalk.

133. *Sign.* A presentation, display, or representation of words or letters, or of a figure, design, picture, painting, color pattern, logo, emblem, symbol, trademark or other representation so as to give notice, advertise, call attention to, or identify an entity.

134. *Software Publishers (NAICS 5112).* Establishments primarily engaged in computer software publishing or publishing and reproduction. Establishments in this industry carry out operations necessary for producing and distributing computer software, such as designing, providing documentation, assisting in installation, and providing support services to software purchasers. These establishments may design, develop, and publish, or publish only.

135. *Stadiums and Sports Arenas (NAICS 713940).* Establishments primarily engaged in operating fitness and recreational sports facilities featuring exercise and other active physical fitness conditioning or recreational sports activities, such as swimming, skating, or racquet sports.

DRAFT

136. *Street.* A public thoroughfare which affords the principal means of access to abutting properties.

137. *Telecommunications Services (NAICS 517).* Establishments that provide telecommunications and the services related to that activity (e.g., telephony, including Voice over Internet Protocol (VoIP); cable and satellite television distribution services; Internet access; telecommunications reselling services). The Telecommunications subsector is primarily engaged in operating, and/or providing access to facilities for the transmission of voice, data, text, sound, and video.

138. *Temporary Use.* A land use established for a limited duration which does not require permanent site improvements. Temporary Uses include, but are not limited to, the erection of temporary structures for activities such as fruit and vegetable sales, Christmas tree sales, fireworks sales, art sales, and other retail sales permitted in the zoning district within which the proposed use is to be located.

139. *Use.* The purpose land, a building or a structure now serves or for which it is occupied, maintained, arranged, designed or intended.

140. *Use District.* A portion or portions of the City designated on the Moscow Zoning Map as one (1) or more of the categories listed and described in this Zoning Code.

141. *Variance.* A modification of the bulk and placement requirements of the ordinance as to lot size, lot coverage, width, depth, front yard, side yard, rear yard, setbacks, parking space, height of buildings, or other ordinance provision affecting the size or shape of a structure or the placement of the structure upon lots, or the size of lots.

142. *Veterinary Services (NAICS 541940).* Establishments of licensed veterinary practitioners primarily engaged in the practice of veterinary medicine, dentistry, or surgery for animals; and establishments primarily engaged in providing testing services for licensed veterinary practitioners.

143. *Warehousing and Storage (NAICS 493).* Establishments that are primarily engaged in operating warehousing and storage facilities for general merchandise, refrigerated goods, and other warehouse products. These establishments provide facilities to store goods. They do not sell the goods they handle. These establishments take responsibility for storing the goods and keeping them secure. They may also provide a range of services, often referred to as logistics services, related to the distribution of goods.

144. *Wholesale Uses (NAICS 423).* Establishments that sell capital or durable goods to other businesses.

145. *Yard.* An open unoccupied space, except as otherwise permitted in this Code, in the front, rear or side on the same lot with a building or proposed building, which extends along a lot line and at right angles to the lot line to a depth or width specified in the setback requirements of the zoning district where the property is located.

~~Sec. 1-6. Adoption of Moscow Zoning Map.~~

~~The original of the Moscow Zoning Map, signed by the Mayor, attested by the Clerk, and kept in the office of the City Engineer, shall serve as the true record of zoning district boundaries of the City. A copy shall be retained by the Clerk. Provisions shall be made on the Moscow Zoning Map for notation of changes to zoning district boundaries. Change notations shall be initialed by the Mayor upon the original Moscow Zoning Map.~~

DRAFT

Sec. 1-7.~~Sec. 1-8.~~ Nonconformities.

A. Intent:

1. Within the zoning districts established by this Zoning Code or amendments thereto, there exist lots, structures, uses of land and structures, and characteristics of uses and structures which were lawful before this Zoning Code was enacted or amended, but which would be prohibited, regulated, or restricted under the terms of this Zoning Code or future amendment. It is the intent of this Zoning Code to permit these nonconformities to continue until they are removed, destroyed or lost by time, but not to encourage their survival. Further it is the intent of this Zoning Code that nonconformities shall not be enlarged, expanded or extended, nor be used as grounds for adding other structures or uses prohibited elsewhere in the same zoning district.

2. Nonconforming uses are declared by this Zoning Code to be incompatible with permitted uses in the same zoning district. A nonconforming use of a structure, a nonconforming use of land, or a nonconforming use of a structure and land in combination shall not be extended or enlarged after passage of this Zoning Code by attachment to a building or by the addition of other uses, of a nature which would otherwise be prohibited in the same zoning district.

3. To avoid undue hardship, nothing in this Zoning Code shall be deemed to require a change in the City-approved plans, construction, or designated use of any building on which actual construction was lawfully begun prior to the effective date of adoption or amendment of this Zoning Code and upon which actual building construction has since been diligently pursued. Actual construction includes the placing of construction materials in permanent position and fastening in a permanent manner. Where excavation, demolition, or removal of an existing building has been substantially begun in preparation for rebuilding, such excavation, demolition or removal shall be deemed to be actual construction, provided that work shall be diligently carried on.

B. Nonconforming Lots of Record: In any zoning district in which single family dwellings are permitted, where any single lot of record existing as of the effective date of adoption of this Zoning Code has been previously approved by the City, a single family dwelling and customary accessory buildings may be erected on such lot.

This provision shall apply even if such lot otherwise fails to meet the requirements for area or width, or both, which are generally applicable in the district. Such lot shall conform to yard dimensions and requirements other than those applying to lot area or width for the zoning district in which such lot is located.

Variance of yard requirements may be granted only pursuant to the procedure set forth in this Zoning Code.

C. Nonconforming Use of Land (or land with minor structures only): Where at the time of passage of this Zoning Code, or of an amendment thereto, lawful use of land exists which would not be permitted by the regulations imposed by this Zoning Code or an amendment, and where such use involves no individual structure with a replacement cost exceeding Two Thousand Dollars ($2,000), such use may be continued as long as it remains otherwise lawful, provided:

1. No such nonconforming use shall be enlarged or increased, nor extended to occupy a greater area of land than was occupied at the effective date of adoption or amendment of this Zoning Code; and

DRAFT

2. No such nonconforming use shall be moved in whole or in part to any portion of the lot or parcel other than that physically occupied by such use on the effective date of adoption or amendment of this Zoning Code; and

3. If any such nonconforming use of land ceases for any reason for a period of more than thirty (30) days, any subsequent use of such land shall conform to the regulations specified by this Zoning Code for the zoning district in which such land is located. This provision shall not apply when the discontinuance or abandonment is caused by government action impeding access to the premises; and

4. No additional structure not conforming to the requirements of this Zoning Code shall be erected in connection with such nonconforming use of land.

D. Nonconforming Structures: Where a lawful structure exists on the effective date of adoption or amendment of this Zoning Code that could not be built under the terms of this Zoning Code by reason of standards for area, lot coverage, height, yards, the structure's location on the lot, or other requirements concerning the structure, such structure may be retained if it remains otherwise lawful, subject to the following provisions:

1. No such nonconforming structure may be enlarged or altered in any manner which increases its nonconformity, except as provided in M.C.C. 4-1-8(D)(4) below; and

2. Should such nonconforming structure or nonconforming portion of structure be destroyed by no fault of the owner (fire, flood, natural disaster, etc.), it may be reconstructed having the same zoning nonconformities, but no more than as existed before the damage occurred;

3. Should such structure be moved for any reason for any distance whatsoever, it shall thereafter conform to the regulations for the zoning district in which it is located after it is moved; and

4. A nonconforming structure may be enlarged or altered with the same zoning nonconformities through the issuance of a Conditional Use Permit.

E. Nonconforming Uses of Structures or of Structures and Premises in Combination: If lawful use of individual structures with a replacement cost of Two Thousand Dollars ($2,000) or more, or of such structures and land in combination, exists on the effective date of adoption or amendment of this Zoning Code that would not be allowed in the zoning district under the terms of this Zoning Code, the lawful use may be continued so long as it remains otherwise lawful, subject to the following provisions:

1. No existing structure devoted to a use not permitted by this Zoning Code in the zoning district in which it is located shall be enlarged, extended, constructed, reconstructed, moved, or structurally altered except in changing the use of the structure to a use permitted in the zoning district in which it is located. An exception would be when destruction of an existing structure and use in combination occurs by no fault of the owner (fire, flood, natural disaster, etc.), the structure and use in combination may be replaced to its original size and use prior to the destruction; and

2. Any nonconforming use may be extended throughout any part of a building which was manifestly arranged or designed for such use at the time of adoption or amendment of this Zoning Code, but no such use shall be extended to occupy any land outside such building; and

3. Any structure, or structure and land in combination, in or on which a nonconforming use is replaced by a permitted use, shall thereafter conform to the regulations for the zoning district in which it is located. The nonconforming use shall not thereafter be resumed; and

4. When a nonconforming use of a structure, or of a structure and premises in combination, is discontinued or abandoned for six (6) consecutive months or for eighteen (18) months

DRAFT

during any three (3) year period, the structure, or structure and premises in combination, shall not thereafter be used except in conformity with the regulations of the zoning district in which the structure is located. This provision shall not apply when the discontinuance or abandonment is caused by government action impeding access to the structure or premises;

F. Repairs and Maintenance:

1. Ordinary repairs and maintenance may be done on any nonconforming structure or nonconforming portion of a structure.

2. Further, upon order of any official charged with protecting the public safety, any building or part thereof declared to be unsafe by such official may be strengthened or restored to a safe condition.

DRAFT

SECTION 2: That Moscow City Code Title 4, Chapter 2 be amended as follows:

Sec. 2-1. Establishment of Zoning Districts.

Pursuant to the policies contained in this Zoning Code and the Plan, the City is divided into zoning districts as depicted upon the Moscow Zoning Map which is hereby adopted and made a part of this Title and Ordinance, as though fully set out herein. Zoning districts depicted on the Moscow Zoning Map shall correspond to the zoning districts established by this Zoning Code.

Sec. 2-2. Adoption of Moscow Zoning Map.

The original of the Moscow Zoning Map, signed by the Mayor, attested by the Clerk, and kept in the office of the City Engineer, shall serve as the true record of zoning district boundaries of the City. A copy shall be retained by the Clerk. Provisions shall be made on the Moscow Zoning Map for notation of changes to zoning district boundaries. Change notations shall be initialed by the Mayor upon the original Moscow Zoning Map.

Sec. 2-3. Rules for Determination of Zoning Districts.

Where uncertainty exists as to the classification or boundaries of zoning districts as shown on the Moscow Zoning Map, the following rules shall apply:

A. Boundaries indicated as approximately following the center lines of streets, highways, or alleys shall be construed to follow such center lines;
B. Boundaries indicated as approximately following lot lines shall be construed as following such lot lines;
C. Boundaries indicated as approximately following City limits shall be construed as following such City limits;
D. Boundaries indicated as parallel to or extensions of features indicated in subsections A through C herein shall be so construed.
E. Distances not specifically indicated on the Moscow Zoning Map shall be determined by the scale of the map.
F. When physical or cultural features existing on the ground are at variance with those shown on the Moscow Zoning Map, or in other circumstances not covered by subsections A through E herein, the zoning district boundaries shall be determined in a manner consistent with the purposes of this Zoning Code.
G. Where a district boundary line appearing on the Moscow Zoning Map divides a platted lot which was in single ownership at the time of passage of this Chapter, the requirements of the less restrictive zoning district shall apply to the whole thereof, provided that such extension shall not include any part of such lot more than thirty (30) feet beyond a zoning district boundary line.
H. If the zoning district of any property as indicated on the Moscow Zoning Map should conflict with a textual description, the Moscow Zoning Map shall prevail.
I. If the zoning of a parcel of land is not shown on the Moscow Zoning Map, the parcel of land shall be deemed to be zoned FR, Farm, Ranch, Outdoor Recreation Zoning District.
J. All land hereafter annexed to the City shall be classified FR, Farm, Ranch, Outdoor Recreation Zoning District, pending study, public hearing and specific zoning district classification.

Sec. 2-4. District Purposes.

A. Agriculture/Forestry Zoning District (AF).

DRAFT

~~Intent~~Purpose: The purpose of the Agriculture/Forestry (AF) zoning district is to foster agriculture and forestry land uses while providing for limited, low-density residential land uses which will not conflict with farm and forest practices nor place inappropriate demands on rural public services nor promote the indiscriminate conversion of farm and forest land to other uses.

B. Farm, Ranch, and Outdoor Recreation Zoning District (FR).

~~Intent~~Purpose: This classification is intended to permit current agricultural, outdoor recreation and other open land uses to be maintained and at the same time to set minimum standards for the development of similar new uses in order that this open zoning district be protected against spasmodic, disorderly and indiscriminate development until such time as another appropriate use of the land in this zoning district has been determined. It is also intended that newly annexed areas of the City be placed in this classification until land use studies determine the character and appropriate use of such areas.

C. Suburban Residential Zoning District (SR).

~~Intent~~Purpose: This classification is to create and protect a permanent single family residential neighborhood at a very low density. Where properly located and controlled, specified rural uses, including pasturage of livestock, may be allowed. Because large areas are contained within lots in this zoning district, the demand for parking is to be satisfied by spaces located entirely on private property. Public improvements are to be designed to serve the rural, low intensity uses permitted in this zoning district; for this reason and because some uses permitted in the SR zoning district may not be compatible with more intensive zoning districts, the following conditions shall apply to the designation of land in the SR zoning district.

1. Local streets developed to a reduced standard specially applicable in the SR zoning district shall not provide primary access to development with a higher density than permitted in the SR zoning district.
2. The minimum size of an SR zoning district shall be ten (10) acres.
3. The SR zoning district shall be located only in areas specifically designated A or A/LR on the Comprehensive Plan Map. Because the SR zoning district may interfere with higher density, more efficient land use, it should be applied where such interference would be unlikely, such as in areas primarily rural in character and not close to schools, public facilities and shopping areas. The SR zoning district should not be applied where the reduced street standards permitted would interfere with present or future transportation needs for the area in which the SR zoning district is proposed.
4. After zoning and development of land in the SR zoning district occurs, changes from this zoning district can only take place concurrently with or after redevelopment of streets and utilities to standards applicable in the proposed zoning district for which the person is applying.

D. Low Density, Single Family Residential Zoning District (R-1).

~~Intent~~Purpose: The R-1 zoning district is a low density residential zone appropriate where the following circumstances are present:

1. Single family dwellings predominate in the area.
2. The physical character of the area does not lend it to more intense development, either by virtue of irregular topography, restricted access, division of the land into subdivision lots of a size greater than the minimum lot size required by this zoning district, or the application of the Plan policies to the land in question.

E. Moderate Density, Single Family Residential Zoning District (R-2).

~~Intent~~Purpose: The R-2 zoning district is a moderate density residential zone appropriate where the following circumstances are present:

DRAFT

1. Single family dwellings predominate.
2. The terrain is not harshly irregular and smaller lot sizes can be accommodated without extensive earthwork.
3. Utilities and other public facilities are adequate for the densities allowed.
4. Existing lot development patterns and policies embodied in the Plan will also guide application of this zoning district.

F. Medium Density Residential Zoning District (R-3).

~~Intent~~Purpose: The R-3 zoning district provides for an increase over the density allowed by the R-2 zoning district by permitting different types of housing construction. It is appropriate where activity levels are moderate, terrain permits construction of somewhat larger structures, and where public systems and neighborhood facilities can accommodate a greater intensity of land use as guided by the Comprehensive Plan.

G. Multiple Family Residential Zoning District (R-4).

~~Intent~~Purpose: The R-4 zoning district provides for the most intense residential land uses permitted in the community. It is to be applied where activity levels are high and adequate public facilities are available, especially near the University of Idaho campus or the City Central Business Zoning District. Adequate transportation access should be given high priority in determining the appropriate location for R-4 zoning districts.

H. Residential/Office Zoning District (RO).

Purpose: The RO Zoning District is a moderately intensive zone including both offices and high density housing. It serves as a transitional Zoning District between residential Zoning Districts and commercial or industrial Zoning Districts. The RO Zoning District is appropriately applied in the following circumstances:

1. On the perimeter of commercial or industrial districts where they abut residential land uses;
2. Where transportation network use is greater than desirable for lower density residential uses;
3. Where landforms create sites which are reasonably accessible by transportation systems and which are buffered from nearby residential areas; and
4. Where the development patterns in a neighborhood will allow development of moderate intensity to occur without producing adverse visual impact or harm to the transportation network.

I. Neighborhood Business Zoning District (NB).

Purpose: The NB Zoning District is the lowest intensity commercial Zoning District permitted within the City. It is intended to apply to areas of less than two (2) acres, where commercial services may be provided in convenient locations serving adjoining residential neighborhoods rather than the community as a whole. The commercial services permitted are those where traffic generation, access requirements, impacts of lighting, neighborhood need for services, and noise production will be compatible with residential uses. The NB Zoning District is appropriately applied in the following circumstances:

1. Where local commercial facilities will serve the everyday needs of a limited neighborhood area;
2. Where activity levels associated with small scale office development can be accommodated or tolerated by surrounding land uses and existing public services;
3. Where a neighborhood core is identified which is easily accessible by pedestrian or vehicular circulation; and

DRAFT

4. Where such commercial development will result in minimal interference with residential uses in the vicinity of the NB Zoning District.

J. Research, Technology and Office Zoning District (RTO).

Purpose: The RTO Zoning District is intended to create a high quality professional environment for research, technology, office and other primary job industries to be established within the City of Moscow. This Zoning District is appropriate where adequate infrastructure is available and where neighboring land uses will enhance, or not detract from, the intent and uses of the RTO Zoning District. The RTO Zoning District should be located adjacent to or in close proximity to arterial or collector streets.

K. Central Business Zoning District (CB).

Purpose: The principal purpose of the CB Zoning District is to provide a location for groups of compatible commercial uses having the common characteristic of not involving more than incidental and minimal assembly, fabrication or storage of commodities; for example, establishments dispensing retail commodities, and those providing professional and personal services to the individual. The CB Zoning District is the most intensive commercial Zoning District. To promote pedestrian use, unbroken, street-level, commercial frontage is encouraged in this Zoning District.

L. General Business Zoning District (GB).

Purpose: The principal purpose of the GB Zoning District is to provide for the location and grouping of compatible retail enterprises having the common characteristics of dispensing commodities, providing professional services or providing personal services to the individual, but which do not involve more than incidental or limited assembly, fabrication or storage of commodities. The GB Zoning District is appropriately applied in the following circumstances:

1. On the periphery of the CB Zoning District where retail uses are appropriate yet the distance to community parking facilities indicates a need for on-site parking.

2. At dispersed commercial centers where the grouping of retail and office uses is appropriate to serve community or regional needs.

M. Motor Business Zoning District (MB).

Purpose: The MB Zoning District is intended to provide for the location and grouping of compatible uses having similar operation as they involve enterprises which depend primarily on the transient motor vehicle-based trade. By concentrating such uses the City intends to increase public convenience when utilizing such services and, within the regulation, to allow such activities to render the maximum service.

N. Industrial Zoning District (I).

Purpose: The I Zoning District is designed to encourage sound industrial development in the City by providing a protective environment primarily for such development.

O. Urban Mixed Commercial Zoning District (UMC).

Purpose: The principal purpose of the UMC Zoning District is to provide a location for urban mixed development including a range of compatible commercial uses such as retail, eating and drinking, and hospitality establishments, professional and personal service uses, as well as residential uses. The UMC Zoning District is intended to promote the urban development form, promote a mixture of commercial and residential land uses. This Zoning District is appropriately applied in close proximity to the Central Business District and the downtown area where the urban form of development is appropriate and intensity of allowed commercial land uses can be accommodated.

P. University Zoning District (U).

DRAFT

Purpose: The purpose of the University Zoning District is to create a district that will protect and maintain the university environment, and provide for the location and grouping of compatible uses found on or in close proximity to the University of Idaho Campus.

(Ords. 97-12, 04/07/97; 97-14, 04/07/97; 97-33, 11/03/97; 98-15, 04/20/98; 98-13, 04/20/98; 98-18, 06/01/98; 2003-24, 11/17/2003; 2005-07, 02/07/2005; 2005-27, 08/15/2005; 2005-33, 12/19/2005; 2006-03, 02/07/2006; 2006-20, 11/06/2006; 2007-11, 09/17/2007; 2008-22, 10/20/2008; 2010-10, 06/07/2010; 2010-24, 11/15/2010; 2011-11, 08/15/2011; 2011-15, 09/19/2011; 2013-05, 04/01/2013; 2013-15, 08/19/2013; 2013-16, 10/21/2013; 2014-06, 05/19/2014; 2014-16, 10/06/2014; 2014-19, 11/17/2014; 2015-04, 03/02/2015; 2015-06, 04/06/2015; 2015-07, 05/04/2015; 2015-11, 07/06/2015; 2015-12, 08/03/2015)

Sec. 2-5. Overlay and Specific Plan Districts.

A. General Provisions.

Overlay and Specific Plan Districts. All land within the City shall be assigned a base zoning district established in Section 4-2-1. In addition, some lands may be designated one or more overlay district. Where a property is assigned an overlay district, both sets of regulations apply, with those of overlay controlling in case of conflict between the two. An overlay district may apply additional requirements or allow exceptions to the standard regulations of the base zone.

B. Legacy Crossing Overlay Zoning District (LCO).

1. Purpose. With the retraction of historic agricultural industrial uses from the downtown area and in special consideration of its unique and sensitive characteristics, the City finds that redevelopment within the LCO area requires an increased level of review to ensure the logical and orderly redevelopment and provision of public services within the LCO area.

2. Relationship to Underlying Zoning. It is the intent of the LCO that the underlying zoning district designation shall specify the permitted land uses within the LCO and the LCO review process shall be contained to the review of design of proposed development within the LCO.

3. Development Review. Prior to the issuance of any building permit for a new principal structure, or for a substantial improvement (as defined by this Code) to any existing principal structure, all development proposals within the LCO shall be reviewed for conformance with the LCO Design Guidelines, as duly adopted by Resolution of the Council, in accordance with the provisions of this Section.

4. Development Review Process. Review of a proposed LCO development shall consist of three (3) stages: a Pre-application Meeting; a Preliminary LCO Development Review; and a Final LCO Development Review.

a. Pre-application Meeting. The pre-application meeting is intended to provide the opportunity to identify and discuss the conformance of the proposed development concept with the underlying zoning designation and the intents, purposes and requirements of the LCO Design Guidelines, and to provide an informal review opportunity of a proposed development prior to substantial design investment by the applicant.

i. Required Pre-application Meeting Materials. The applicant shall provide concept plans which show the proposed development, including a concept site plan, building elevations, and the number, floor area, and proposed use of all proposed structures and land areas of the development site. Such plans shall be of adequate scale, resolution and detail to provide the Zoning Administrator with adequate information to assess the conformance of proposed development to the LCO Design Guidelines.

ii. Upon completion of the Pre-application Meeting, the Zoning Administrator shall provide the applicant with comments and suggestions for any recommended amendments and/or modifications to the development concept for use in further development of the application.

DRAFT

b. Preliminary Development Review.

i. Preliminary LCO Development Application Materials. Prior to review by the Planning and Zoning Commission, the applicant shall submit five (5) copies the following development application materials to the Zoning Administrator:

(a) A development site plan that includes all the following:

(i) Property boundary lines and individual lot lines of each parcel which is to be created for separate ownership;

(ii) Existing and proposed grade plan in two foot (2') maximum contour intervals of the development site and extending a minimum of twenty feet (20') outside the development site;

(iii) The location of all buildings and all off-street parking areas;

(iv) The location of all planned and existing thoroughfares and walks, their widths and nature of their improvements, and whether they are to be public or private;

(v) The location of easements for water lines, fire hydrants, sewer and storm sewer lines, and other utilities;

(vi) Areas to be conveyed, dedicated, reserved or used for parks, playgrounds or any other public use;

(vii) Landscaping and tree planting plans including the location of existing trees and shrubs which are to be retained;

(viii) Any other details deemed necessary during the Pre-application Meeting to demonstrate conformance with the LCO Design Guidelines.

(b) Elevation drawings of all proposed structures including a description of proposed building materials and all proposed land uses including a computation of total square footages dedicated to the proposed uses; and

(c) Lighting and signage plans.

iv. All submitted plans shall be drawn to a standard engineer's or architect's scale and may contain multiple categories of the above-listed information on any one (1) plan drawing, provided that such plan drawing represents all information in an accurate and readily identifiable manner. Plans shall contain information and detail as necessary to determine compliance with applicable codes, and to determine conformance with the LCO Design Guidelines and intent of this Section.

v. Determination of Completeness. Upon receipt of the Preliminary Review submission from Applicant, the Zoning Administrator shall distribute the proposed development plans to the appropriate development review parties for review and comment upon the proposed development plans. Upon determination that the application materials are complete and in substantial conformance with applicable City standards and requirements, the Zoning Administrator shall schedule the Preliminary LCO Development Application for review by the Planning and Zoning Commission.

vi. Preliminary Review Public Comment Period. Prior to the Preliminary Review by the Commission, notice of the proposed development shall be published in the paper of record and posted upon the subject property. Such notice shall describe the nature of the proposed development, the location where materials relating to the proposed development may be viewed, and provide fifteen (15) calendar days from the date of publication and posting for written comments regarding the proposed development to be submitted to the Zoning Administrator. All written comments received by the Zoning Administrator shall be included with the preliminary review materials for the Commission's consideration.

DRAFT

vii. Preliminary Development Review Process. The Preliminary Review shall be conducted by the Commission as a regular agenda item. The Commission shall evaluate the conformance of the proposed development with the LCO Design Guidelines and may give approval of the proposed development, or approval subject to required modifications or conditions, or may deny the development proposal. All decisions of the Commission shall be based upon the criteria established within the LCO Design Guidelines. If the proposed development will include Conditionally Permitted Uses or require a Variance, the Commission shall serve as the hearing body for the proposed Conditional Use or Variance in conjunction with the Preliminary Review.

viii. Appeal of the Preliminary Decision. The decision of the Commission relative to a proposed LCO development may be appealed to the Council by the applicant or by any affected person, as defined by this Code, in accordance with this Code.

ix. Duration of Preliminary Approval. Preliminary approval of a LCO development proposal shall expire eighteen (18) months following the date of approval by the Commission and shall be automatically null and void on such date unless final approval has been granted prior to such time.

c. Final Review. The final review process is intended to provide an opportunity to review the final development plans for conformance with the intent of the Preliminary Development Review approval.

i. Final LCO Development Application Review Materials. The applicant shall provide five (5) copies of the proposed final LCO development plans to the Zoning Administrator not less than twenty one (21) days in advance of the meeting of the Commission at which the proposed final development plans shall be reviewed. The final LCO development plan submission shall include final version of all materials required for the Preliminary development review, in addition to the following items:

(a) Evidence of clear title to any lands to be conveyed or reserved for parks, scenic ways, playgrounds, schools, public buildings, or other public purposes;

(b) Final plans for location of water, sewer, drainage and all other utilities, and plans for street improvements and grading;

(c) A final phasing plan; and

(d) Any proposed development agreements, deed restrictions, or other commitments necessary to assure compliance with the proposed final LCO development plan.

ii. Final LCO Development Review Process. If the proposed final LCO development plan is substantially similar to the LCO development plan application submitted to the Commission for preliminary approval and, if it adequately incorporates all required conditions or modifications, it may be considered as a regular agenda item at a meeting of the Commission. The Commission may grant final approval, may grant final approval with minor modifications or conditions, or may deny the application if it is not in substantial conformance with the preliminary approval and/or conditions of preliminary review approval. Phased building permits and construction shall be allowed in accordance to phasing plans presented and approved within the original approval.

iii. Appeal of the Final Decision. The decision of the Commission relative to a proposed LCO development final approval may be appealed to the Council by the applicant or by any affected person, as defined by this Code, in accordance with this Code.

iv. Duration of Final LCO Development Approval. If building permits required for the approved LCO development are not obtained within twenty four (24) months following the

DRAFT

date of final approval by the Commission, such LCO development final approval shall be immediately revoked and shall be automatically null and void on such date. Within twenty four (24) months following the date of LCO development final approval by the Commission, the applicant of such LCO development may request one (1) extension of not more than twelve (12) months from the date of the request for extension. The request for extension shall be reviewed and approved or denied by the Commission. No further extension shall be granted.

d. LCO Project Amendment. After final approval of a LCO Development, the Zoning Administrator shall administer the permitting and development review process for the project. The Zoning Administrator shall be allowed to approve minor amendments to the project that do not substantively alter the intent and considerations, or specific conditions of the Commission's project approval. If the Zoning Administrator finds that the proposed amendment substantively alters the intent and considerations, or specific conditions of the Commission's approval, the proposed amendment shall be consider by the Commission as a regular agenda item.

(Ord. 2012-09, 06/04/2012)

SECTION 3: That Moscow City Code Title 4, Chapter 3 be amended as follows:

Sec. 3-1. Introduction of Land Use Table.

The Land Use Table within Section 3.4 below lists the uses allowed within all base zoning districts. Each of the listed uses is defined in City Code Section 4-1-6, *Definitions*.

Sec. 3-2. Interpretation of Land Use Table.

A. Permitted Uses. "P" in a cell indicates that the use is allowed by right, without special conditions other than those imposed upon other uses by right in the district. Permitted uses are subject to all other applicable regulations of this Code.

B. Permitted Accessory Uses. "PA" in a cell indicates that the use is allowed only as accessory or incidental to a permitted principal use. An accessory use is generally designed or employed in conjunction with but subordinate to its primary use.

C. Conditional Uses. "C" in a cell indicates that in the respective zoning district the use is allowed only if reviewed and approved in accordance with the procedures in City Code Section 4-8-4, Conditional Uses. Conditional Uses are subject to all other applicable regulations of this Code. A "C" designation does constitute an authorization or assurance that such use will be permitted. Rather, each Conditional Use Permit application shall be evaluated against the relevant criteria and standards contained within City Code Section 4-8-4(B), and may be approved or denied as the findings indicate appropriate.

D. Uses Subject to Specific Requirements. "P^x", "PA^x", or "C^x" in a cell indicates that the use is subject to specific requirements contained within footnotes at the end of the use table.

E. Prohibited Uses. A blank cell indicates that the use is not permitted in the respective zoning district.

Sec. 3-3. Authorized Uses.

This Zoning Code is an exclusive zoning ordinance wherein the stated uses are the only uses which are permitted in each zoning district. Those uses not listed as permitted or conditionally permitted are not authorized. The question whether a specific use is encompassed by a listed use shall be subject to the Zoning Administrator's or designee's reasonable discretion. Further, ~~when,~~

DRAFT

~~as a result of subsequent changes in technology, business practice, or lifestyle,~~ if a proposed use is not specifically listed within the Land Use Table, the Zoning Administrator or designee shall make a determination as to the zoning classification into which such use should be placed, based upon the most comparable use listed within the table. ~~a use has not been mentioned in this Zoning Code, the Zoning Administrator or designee may permit such use if it is clear that the use is comparable to listed uses for a particular zoning district. Alternatively, the Zoning Administrator or designee may refer such proposed use to the Board of Adjustment for review as a conditional use. Any other use not listed may only be permitted upon amendment of this Zoning Code to include such use in the appropriate zoning district.~~

Sec. 3-4. Land Use Table.

DRAFT

LAND USE TABLE

P = Permitted Use PA = Permitted Accessory Use C = Conditional Use Permit Blank = Not Permitted

RESIDENTIAL USES	NAICS 2012 Code No.	AF	FR	SR	R-1	R-2	R-3	R-4	RO	NB	RTO	CB	GB	MB	I	UMC	U
Dwellings in Residential Zones[2]																	
Single Family (up to 4 unrelated individuals)		P	P	P	P	P	P	P	See below, *Dwellings in Commercial Zones*								
Two Family							P	P									
Twinhome							P	P									
Townhouse[1]							P	P									
Single Family (up to 6 unrelated individuals)		C	C	C	C	C	C	P									
Multiple Family (3 or more units)								P									
Mobile Home Parks								P									
Dwellings in Commercial Zones																	
Above or behind a commercial use or on a secondary street frontage		See above, *Dwellings in Residential Zones*							P	P		P/C[3]	P	P	PA[4]	P/C[3]	P
On the ground floor on primary street frontage									P	C		C	C	C	PA[4]	C	P
Group Living																	
Boarding House (occupied by owner, up to 6 boarders)		P	C	C	C	C	C	P	See above, Dwellings in Commercial Zones								
Dormitories																	P
Fraternity, Sorority, and Cooperative Houses	721310							C									P
Accessory Uses																	
Accessory Dwelling Unit[1]		PA	PA	PA	PA	PA	PA	PA									
Accessory Home Occupations Type I[1]		PA	PA	PA	PA	PA	PA	PA	PA	PA		PA	PA	PA	PA	PA	PA
Accessory Home Occupations Type II[1]		C	C	C	C	C	C	C	PA	PA		PA	PA	PA	PA	PA	PA
Gardens (Accessory)		PA	PA	PA	PA	PA	PA	PA	PA	PA	PA	PA	PA	PA	PA	PA	PA
Garages or workshops, private (<1,000 sq ft)		PA	PA	PA	PA	PA	PA[15]	PA[15]	PA								
Garages or workshops, private (1,000-1,500 sq ft)		C	C	C	C	C	C	C									
NON-RESIDENTIAL USES	**NAICS 2012 Code No.**	**AF**	**FR**	**SR**	**R-1**	**R-2**	**R-3**	**R-4**	**RO**	**NB**	**RTO**	**CB**	**GB**	**MB**	**I**	**UMC**	**U**
Agricultural Uses																	
Agriculture, Animal Production	112	P/C[18]	C[5]														P
Agriculture, Crop Production	111	P															P
Animals and Fowl (as permitted by City Code Title 10)		PA	PA	PA	PA	PA	PA	PA	PA								
Animal Slaughtering and Processing	31161	C													P		P
Gardens (Market and Community) no on-site retail sales[1]		P	P	P	P	P	P	P	P	P		P	P	P	P	P	P
With on-site retail sales[1]		P	P	C	C	C	C	C	P	P		P	P	P	P	P	P
Sawmills	321113	C													C		
Amusement and Recreation Facilities																	
Archery/Shooting Ranges (indoor only)	713990											P	P	P	P	P	P
Bowling Centers	713950											P	P	P		P	P
Dance Halls	713990											P	P	P		P	P
Fitness Centers	713940									P		P	P	P		P	P
Golf Courses and Country Clubs	713910	C	C	C	C	C	C	C	C								P
Miniature Golf Facilities	713990											P	P	P		P	P
Movie Theaters	512131											P	P	P		P	P
Riding Stables	713990	C										P	P	P	P	P	P
Stadiums and Sports Arenas (Ice/Roller Rinks, Gymnasiums, Ballfields)	713940						C	C				P	P	P		P	P
Animal-Related Business																	
Veterinary Services	541940	C	C						P	P			P	P	P		
Pet Care Services[1]	812910	C	C							P[10]				P	P		
Financial, Technology, and Professional Services																	
Agencies, Brokerages and Other Insurance Related Activities	5242							P[6]	P	P	P	P	P	P		P	
Broadcasting Studios	515										P	P	P	P		P	
Business, Professional, Political, Social Advocacy, Grantmaking, and Similar Organizations	8132/8133/8139							P[6]	P	P	P	P	P	P		P	
Commercial Banking, Credit Unions, and Savings Institutions	522110/120/130											P	P	P			
Construction Contractor Services	238											P	P	P	P	P	
Data Processing, Hosting, and Related Services	518								P	P	P	P	P	P	P	P	P
Professional, Scientific, and Technical Services	541							P[6]	P	P	P[11]	P[11]	P	P	P	P[11]	P
Publishing Industries (except Internet)	511										P	P	P	P	P	P	P
Real Estate Services	531							P[6]	P	P	P	P	P	P		P	
Securities, Commodity Contracts, and Other Financial Investments	523							P[6]	P	P	P	P	P	P		P	
Software Publishers	5112							P[6]	P	P	P	P	P	P	P	P	
Food and Beverage Service																	
Coffee/Espresso Stand										P		C	C	P		C	P
Drinking Places (Alcoholic Beverages)	722410											P	P	P		P	P
Restaurants	72251								P[9]	P		P	P	P		P	P

NON-RESIDENTIAL USES	NAICS 2012 Code No.	AF	FR	SR	R-1	R-2	R-3	R-4	RO	NB	RTO	CB	GB	MB	I	UMC	U
Manufacturing																	
Beverage Manufacturing	3121									C		P	P	P	P	P	
Manufacturing, Heavy															C		
Manufacturing, Light													C	P	P	C	
Aerospace Product and Parts Manufacturing	3364										P		C	P	P	C	
Computer and Electronic Product Manufacturing	334										P		C	P	P	C	
Electrical Equipment, Appliance, and Component Manufacturing	335										P		C	P	P	C	
Medical Equipment and Supplies Manufacturing	3391										P		C	P	P	C	
Pharmaceutical and Medicine Manufacturing	3254										P		C	P	P	C	
Public/Institutional Uses																	
Antenna Towers *(new)*		C	C	C	C	C	C	C	C	C		C	C	C	C	C	C
Co-Location[14]		P	P	P	P	P	P	P	P	P		P	P	P	P	P	P
Cemeteries	812220	C	C	C	C	C	C	C	C					C			
Child Day Care Services[1]																	P
Family, 5 or fewer children		PA	PA	PA	PA	PA	PA	PA	PA	PA	PA	PA	PA	PA	PA	P	
Group, 6 to 12 children		P	P	P	P	P	P	P	P	P	C	C	C	C	C	P	
Small, 13 to 20 children		C	C	C	C	C	P	P	P	P	C	C	C	C	C	P	
Large, 21 or more children		C	C	C	C	C	C	C	C	P	C	C	C	C	C	C	
Civic and Social Organizations	813410											P	P	P		C	P
Community/Neighborhood Center		C	C	C	C	C	C	C	P	P		P	P	P			P
Correctional Institutions	922140													C	C		
Educational Services[1]	611	C	C	C	C	C	C	C	C	C	C[16]	C	C	C	C	C	P
Fairgrounds		C	C	C	C	C	C	C	C					C			
Funeral Homes and Funeral Services	81221							C	C	P		C	P	P			
Government Office Buildings		C	C	C	C	C	C	C	C	P		P	P	P	P	P	P
Health Care Services (Ambulatory) (excluding 624410)	621								P	P	P[8]	P	P	P	P	P	P
Hospitals	622											C	P	C			P
Museums and Art Galleries	712110							C	C	P		P	P	P		P	P
Nursing and Residential Care Facilities	623			C	C	C	C	C	C				P	P			
Public Parks & Recreational Facilities (operated by local government)[7]		P	P	P	P	P	P	P	P	P	P	P	P	P	P	P	P
Public Service and Utility Facilities		C	C	C	C	C	C	C	C	C	C	C	C	C	P	C	P
Religious Facilities	813110	C	C	C	C	C	C	C	C	P		P	P	P		C	P
Telecommunications Services[1]	517							P[6]	P	P	P	P	P	P	P	P	
Retail and Personal Services																	
Consumer Goods Rental	5322									P		P	P	P	P	P	P
Laundries and Drycleaners	812310/ 812320									P		P	P	P	P	P	P
Personal Care Services	8121								P	P		P	P	P	P	P	P
Retail Sales (excluding 4411, 444, 447, & 453930)	44-45								PA	P	PA	P	P	P	P	P	P
Large Retail Establishment[1]														P	P		
NON-RESIDENTIAL USES	**NAICS 2012 Code No.**	**AF**	**FR**	**SR**	**R-1**	**R-2**	**R-3**	**R-4**	**RO**	**NB**	**RTO**	**CB**	**GB**	**MB**	**I**	**UMC**	**U**
Storage Services																	
Self-Storage Facilities	531130	C	C											C	P		
Warehousing and Storage	493										PA[12]			C	P		
Wholesale Uses	423										PA[12]			C	P		
Temporary Uses[1]												P	P	P	P	P	
Vehicles and Equipment																	
Automobile and RV Dealers	4411											C	C	P	P		
Automotive Repair and Maintenance	8111											C	C	P	P		
Building Material Sales & Garden Equipment/Supplies	444													P	P		
Commercial and Industrial Machinery and Equipment Repair and Maintenance	811310														P		
Electronic and Precision Equipment Repair and Maintenance	8112								P	P		P	P	P	P		
Gasoline Stations	447											C	C	P	P		
Heavy Equipment Sales (manufactured home dealers, farm and garden equipment)	453930 423820													C	P		
Parking Lots and Garages	812930	PA	PA	PA	PA	PA	PA	PA	P	P	PA	P	P	P	P	P	P
Personal and Household Goods Repair and Maintenance	8114									P		P	P	P	P	P	
Railroad Yards and General Freight Trucking	488210/4841														P		
Rental and Leasing Services (excluding 5322)	532											C	C	P	P		
Scrap Yards/Material Recycling	423930														C		
Visitor Accommodations																	
Bed and Breakfast	721191	P	P	C	C	C	C	P	P	P		P	P	P		P	
Hotels and Motels	721110											P	P	P		P	P
RV Parks and Campgrounds	721211	C	C					C					P	P	P		P
USE ELEMENTS & EXCEEDANCES TO BULK & DIMENSIONAL REQUIREMENTS		**AF**	**FR**	**SR**	**R-1**	**R-2**	**R-3**	**R-4**	**RO**	**NB**	**RTO**	**CB**	**GB**	**MB**	**I**	**UMC**	**U**
Drive-Through Facilities[1]												P/C[13]	C	P		C	
Exceedance of maximum building height (for permitted non-residential uses)		C	C	C	C	C	C	C	C	C	C	C	C			C[17]	

NOTES
[1] Subject to Specific Use Standards within Section 4-3-4 of this Zoning Code
[2] Only one principal dwelling permitted per building lot in AF, FR, SR, R-1, and R-2 Zones
[3] Residential dwellings located on ground floor on secondary street frontages require a Conditional Use Permit in CB and UMC Zone
[4] One dwelling unit per lot is allowed where accessory to a permitted principal use
[5] Feedlots must be on at least 20 acres of land and associated buildings must be set back at least 500 ft from the nearest property line
[6] Use shall not exceed 2,000 sq ft of office space
[7] Including all public facilities operated by local government (including but not limited to parks, recreational facilities, and recycling centers)
[8] Excluding Outpatient Care Centers, Home Health Care Services, and Other Ambulatory Health Care Services (NAICS 6214, 6216, and 6219)
[9] Restaurants shall not exceed 1,500 sq ft in the RO Zone
[10] Indoor kennels only
[11] Excluding Veterinary Services
[12] Indoor storage only
[13] Drive-up windows permitted for financial institutions only, Conditional Use Permit is required for drive-up windows associated with all other uses in the CB Zone
[14] Antenna shall not extend more than 18 ft above, and shall not project more than 8 ft horizontally away from the existing tower or support structure
[15] Or 600 sq ft per dwelling unit in R-3 and R-4 Zones
[16] Business Schools and Computer and Management Training, and Technical and Trade Schools Only, as defined by NAICS code number 6114 and 6115, and excluding aviation and flight training instruction schools, modeling schools, nursing schools, cosmetology schools, and truck driving schools
[17] Residential or commercial uses may obtain a Conditional Use Permit for exceedance of the maximum building height in the UMC Zone
[18] Feedlots with up to 20 animals are permitted by right. Feedlots between 20 and 200 animals require a Conditional Use Permit.

Sec. 3-5. Specific Use Standards.

A. Accessory Dwelling Units:

1. Applicability and Purpose. These standards shall apply to Accessory Dwelling Units which are permitted by this Code. These standards are intended to help promote the benefits of Accessory Dwelling Units, while also preserving neighborhood character and creating predictability and certainty for established neighborhoods.

2. Specific Standards.

a. General. Accessory Dwelling Units must meet all applicable regulations for the zoning district in which they are located, except as otherwise expressly stated within this Section. Lots that currently do not meet the minimum lot size for a single family dwelling shall be ineligible for an Accessory Dwelling Unit.

b. Size. The floor area of the Accessory Dwelling Unit may not exceed six hundred (600) square feet or forty percent (40%) of the gross floor area of the principal dwelling, whichever is less.

c. Maximum Occupancy. The number of persons allowed to reside within an Accessory Dwelling Unit shall be limited to two (2).

d. Owner Occupancy.

i. Prior to the issuance of a building permit for an Accessory Dwelling Unit, the property owner must record a deed restriction upon the property which states that the property owner will reside on the property, within either the principal dwelling or Accessory Dwelling Unit. The deed restriction must be approved by the City Attorney and shall be binding upon the heirs, assigns, and subsequent purchasers of the property.

ii. Owner occupancy means a property owner, as reflected in real property records, who makes his or her legal residence at the property, as evidenced by voter registration or similar means and actually resides at the property for more than six (6) months out of any given year. Owner occupancy may also include a named natural person with an ownership or benefit in a private trust, but shall not extend to corporate trusts.

iii. The Community Development Director may waive this requirement for temporary absences of greater than six (6) months for military service, employment sabbatical, or family medical leave qualified absences. Temporary leave waivers for other reasons must be reviewed and approved by the City Council.

iv. In the event the owner is unable to reside on the property as required herein, only one (1) of the dwelling units on the property may be occupied.

DRAFT

e. Off-street parking. One (1) off-street parking space shall be required for the Accessory Dwelling Unit, in addition to that required for the principal dwelling.

B. Accessory Home Occupations.

1. Purpose.

Accessory home occupations are uses that occur within dwellings and which are accessory and incidental to the principal use of the subject property for residential purposes. It is the intent of this Section to allow accessory home occupations that are compatible with the surrounding neighborhood and land use where the nature of the accessory home occupation use is and remains secondary to the principal use of the subject property as a dwelling. This Section recognizes that many types of accessory home occupations can be conducted within a residential dwelling with little or no adverse effect(s) on the surrounding neighborhood.

2. Description of Accessory Home Occupation Types.

For the purposes of this Section there shall be two (2) classifications of accessory home occupations as follows:

a. Type I Accessory Home Occupation. A Type I Accessory Home Occupation is a non-residential use conducted solely by the inhabitants of the dwelling within such dwelling unit, or allowable accessory structure thereto; where there are no on-site employees or customer services provided; and where the conduct of the use does not change the character or nature of the dwelling or surrounding area. Examples include, but are not limited to, artists, crafts people, writers, graphic artists, computer programmers and software developers, consultants and similar uses. Private instruction (such as music instruction, private tutoring, other and similar uses) involving no more than four (4) students upon the premises at any one time shall be deemed to be a Type I Accessory Home Occupation.

b. Type II Accessory Home Occupation. A Type II Accessory Home Occupation is a non-residential use conducted by the inhabitants of the dwelling with up to one (1) additional on-site employee, and/or with on-site customer service provided upon the subject property, and where the conduct of the use does not change the character or nature of the dwelling or surrounding area.

3. Accessory Home Occupation Use Regulations.

a. Allowed Uses. Type I Accessory Home Occupations shall be an allowed use in all residential Zoning Districts, but shall be subject to the performance standards included herein. Type II Accessory Home Occupations shall be a Conditionally Permitted Use in all residential Zoning Districts and shall also be subject to the performance standards included herein.

b. Prohibited Accessory Home Occupation Uses. The following uses shall not be allowed as either a Type I or Type II Accessory Home Occupation, but may otherwise be permitted under this Code:

i. Animal clinics or kennels;

ii. Bed and breakfast;

iii. Boarding house;

iv. Daycares;

v. Dispatch centers, where employees come to the site and are dispatched to other locations;

vi. Manufacturing utilizing power tools or similar equipment such as furniture refinishing or building, cabinet making, metal fabrication or cutting, employing welding or

DRAFT

cutting, or other similar uses, except for minor and incidental use of such equipment deemed allowable by the Zoning Administrator;

vii. Medical clinics;

viii. On-site retail sales involving on-premises customer service, except as may be permitted as an accessory use to a Type II Accessory Home Occupation;

ix. Repair or assembly of vehicles or equipment with internal combustion engines (such as automobiles, lawnmowers, motorcycles, snow-mobiles and other similar equipment);

x. Restaurants;

xi. Schools;

xii. Towing services; and

xiii. Other uses with similar operating characteristics as determined by the Zoning Administrator.

4. Accessory Home Occupation Performance Standards.

a. Outdoor Activities. All activities shall be conducted wholly within the principal structure or a permitted accessory structure thereto. External storage or display of goods or equipment shall be prohibited.

b. Appearance of Structure and Site. The dwelling and subject property shall remain residential in character and the Accessory Home Occupation use shall not be discernable from the exterior of the principal structure or permitted accessory structure thereto. No alterations of the structure or subject property which would change the residential appearance of the dwelling and subject property shall be permitted. Examples of such prohibited alterations include construction of parking lots, paving of setbacks, external signage not otherwise permitted by this Code, or adding commercial exterior lighting.

c. Vehicles. No more than one (1) vehicle shall be discernable as being used in association with the Accessory Home Occupation. The maximum size of such vehicle used in association with the Accessory Home Occupation shall be no more than one (1) ton capacity and shall not include any trailer.

d. Deliveries. Deliveries and/or pick-ups of supplies or products associated with the Accessory Home Occupation shall be allowed only between 8:00 a.m. and 6:00 p.m. local time.

e. Nuisances. Unless otherwise permitted by law, no Accessory Home Occupation shall produce any detectable fumes, odors, dust, heat, noise, vibration, glare, electro-magnetic field, electrical interference, or other effects outside the dwelling which is incompatible with the characteristics of the residential Zoning District or is otherwise a violation of this Code.

C. Child Care Facilities.

The following standards are required for approval of Child Care Facilities when such uses are classified as permitted uses within zoning districts and shall serve as guidelines to which additional conditions may be added when Child Care Facilities require conditional use permits to operate within a zoning district:

1. Parking and Loading Facilities:

a. Child Care Facilities shall provide off-street parking adequate to meet the requirements of City Code Section 4-6-5.

b. Child Care Facilities shall provide loading spaces in accordance with the following standards:

DRAFT

i. Quantity of Loading Spaces required:

(a) Group Child Care: one (1).

(b) Small and Large Child Care: two (2).

ii. Required loading spaces may be provided in one of the following ways:

(a) On-street, subject to the approval of the City Engineer, when the space is reserved or otherwise generally available, and which is located on the same side of the street as the Child Care Facility. On-street loading space shall be at least thirty feet (30') from any street intersection.

(b) Off-street where the travel path from the loading space(s) to the Facility entrance does not cross vehicle maneuvering and travel areas.

2. Play Area and Screening. Child Care Facilities shall provide a contained or fenced outdoor play area sufficient to comply with the spatial standards required by City Code. Sight-proof fencing or sight-proof landscaping shall be provided on perimeters of such outdoor play areas where necessary to protect the privacy of neighbors' yards.

3. Additional Large Child Care Facility Standards. To ensure that traffic generated by a large Child Care Facility will not disrupt a residential neighborhood characterized by low volumes of vehicular traffic, such Facilities shall be:

a. Located on City street that has an average daily traffic (ADT) of at least five hundred (500) vehicles per day; or

b. Located within three hundred feet (300') of a school and provide after school service for school age children; or

c. Permitted when the facility is located in a church, grange hall, social center or other large public assembly building; or

d. Upon issuance of a Conditional Use Permit.

4. Site Plan Required. To ensure compliance with these standards, a site plan shall be submitted for all Child Care Facilities indicating parking, loading, traffic flow characteristics and related signage.

5. Use of public right-of-way for Child Care loading is discretionary and subject to the approval of City Engineer in consideration of the availability and demand of on-street parking in the subject area and the proximity of the proposed loading space to intersections, current and future traffic conditions, and other similar considerations.

D. Drive-Through Facilities.

1. Applicability and Purpose. These standards shall apply to establishments that utilize drive-through windows as part of their business operations. These standards are intended to ensure that the design and operation of drive-through facilities provide functional and safe traffic circulation, access, and vehicle queuing. The standards are also meant to ensure that drive-through facilities are compatible with the surrounding area and minimize their impacts on adjacent uses.

2. Development Standards. Drive-Through Facilities shall comply with the following design standards and requirements.

a. Number of Spaces Required. Drive-Through Facilities with one (1) service window shall provide room for five (5) queuing spaces. When there are two (2) or more service windows provided, there shall be room for four (4) queuing spaces per service window.

b. Size of Space. The dimensions of a vehicle queuing space shall be a minimum of twelve feet (12') in width and twenty feet (20') in length.

DRAFT

c. Turning Radius. The minimum drive-through lane inside turning radius shall be twenty feet (20').

d. Demarcation. Drive-through lanes shall be clearly demarcated with striping or curbing.

e. Additional Queuing. The design, signage or operational characteristics of the Drive-Through Facility shall prevent or discourage vehicles from waiting for service on public sidewalks or streets.

f. Landscaping. Drive-through lanes adjacent to public streets shall provide a landscape buffer of a minimum of three feet (3') in width and shall contain one (1) tree of one and a half inch (1.5") caliper every forty (40) lineal feet and one (1) shrub every six feet (6').

E. Educational Services (Schools).

1. Purpose. The following standards are required to ensure the safety and placement of loading spaces that are intended to serve as student pick-up and drop-off locations.

2. Loading Standards. Schools shall provide off-street turn-out areas for student pick-up and drop-off, in addition to the required off-street parking found within Section 4-6-5(E). Loading space shall be provided for at least two (2) vehicles provided in a manner that would not result in a safety hazard to children being picked up or delivered. Such space may be provided in one of the following ways:

a. On-street, when the space is reserved or otherwise generally available, and which is located on the same side of the street as the School. On-street loading space shall be at least thirty feet (30') from any intersection.

b. Off-street, where ingress and egress would not require backing movements by vehicles.

c. Other loading space determined to be safe by the City Engineer considering existing street and traffic conditions and anticipated use of the loading facility.

F. Gardens Market, Community and Accessory.

1. Applicability and Purpose. These standards shall apply to Market Garden and Community Garden uses where such uses are located within SR, R-1, R-2, R-3, and R-4 Zoning Districts, and shall serve as guidelines where such uses are considered as a Conditionally Permitted Use. These standards are intended to reduce the potential for adverse impacts to adjacent residential uses and to mitigate potential nuisances.

2. Specific Standards.

a. Permitted Accessory Structures. Hoop houses, green houses, shed and other minor accessory structures without permanent foundations and of less than one thousand (1,000) square feet in size shall be permitted in association with the operation of a permitted Market or Community Garden use. If the associated Market or Community Garden use ceases, such structures shall be removed from the property.

b. Hours of Operation.

i. Operation of Market and Community Gardens shall be limited to sunrise or 7:00 a.m. local time, whichever is earlier, and must end at sunset or 9:00 p.m. local time, whichever is later. Operation shall be defined as people engaged in the operation of the use present upon the site.

ii. Where permitted, retail sales shall be limited to the hours of 8:00 a.m. to 7:00 p.m. local time.

DRAFT

iii. Use of motorized equipment shall be limited to 7:00 a.m. to 9:00 p.m. local time.

iv. The pickup of produce by those who have purchased shares, such as a Community Supported Agriculture (CSA), shall be permitted during daylight hours and shall not be considered retail sales.

c. Lighting. Exterior and interior lighting use associated with the operation of a Market or Community Garden shall be limited and shall not result in light trespass or glare upon adjacent residential uses.

d. Use of Machinery. The use of motorized equipment and machinery shall be limited to typical residential scale equipment, except that larger equipment may be used on an infrequent basis during spring and fall preparation activities.

e. General Nuisance Prohibition. Operation of Market and Community Gardens shall be conducted in a manner so as to limit dust, noise, drainage, overspray of chemicals, or smells that would constitute a public nuisance.

f. Signage. Signage advertising and/or identifying a permitted Market or Community Garden use shall be allowed as provided within the City Sign Code.

g. Keeping of Animals. The keeping of animal and fowl in association with a Market Garden shall be permitted per the animal regulations of City Code.

h. Off-Street Parking. In order to preserve the residential character of neighborhoods, no Off-Street Parking shall be required for Market and Community Gardens. Any Off-Street Parking provided for Market and Community Gardens shall be limited in nature and shall not be fully improved or paved. Grassed or small graveled seasonal parking areas shall be permitted.

i. Exceedance of Standards. These standards may be exceeded with approval of a Conditional Use Permit.

G. Large Retail Establishments.

Large Scale Establishments.

a. New Large Retail Establishments. Every new Large Retail Establishment shall comply with the provisions of this Section and the City of Moscow Large Retail Establishment Design Manual (Design Manual), as adopted or amended by Resolution of the Council. Any substantive deviation from a standard required by the Design Manual shall require a Variance.

b. Expansion of Existing Large Retail Establishments. The following is required for expansion(s) of a Large Retail Establishment:

i. Any one (1) time expansion of an existing Large Retail Establishment shall comply with Subsection (4)(d) Stormwater Management (for any proposed additional impervious surface areas). Additionally, the provisions of the Design Manual shall apply to the greatest extent feasible in consideration of the existing site development, as determined by the reviewing body.

ii. Conditions of Reconstruction. If any existing Large Retail Establishment should be destroyed by any means to an extent of more than seventy (70%) percent of the replacement cost of the whole structure at the time of destruction, it shall not be reconstructed except in conformity with the provisions of the Design Manual (to the greatest extent feasible in consideration of the existing site development, as determined by the Zoning Administrator).

DRAFT

c. Large Retail Establishments that includes less than one hundred forty (140) parking stalls shall not be subject to Section 2.2, Parking Lots, of the Design Manual.

d. Large Retail Establishments Greater Than Sixty Five Thousand (65,000) Square Feet. In addition to other requirements contained in the Design Manual, every application for a new Large Retail Establishment of greater than sixty five thousand (65,000) square feet of gross floor area or any application for the expansion of more than thirty percent (30%) of any existing Large Retail Establishment, where such expansion would result in the creation of a Large Retail Establishment of greater than sixty five thousand (65,000) square feet of the gross floor area, shall address and include all of the following items:

i. Site location and existing and future streets and pathways. The applicant shall show, as part of the application, that the proposed development does not preclude the logical and orderly extension of existing public streets and pathways and does not preclude the development of future planned streets and pathways, as generally identified within the City's Comprehensive Plan.

ii. Multimodal Traffic Study. The applicant shall provide a Traffic Impact Study (including pedestrian, bicycle, transit and motorized travel) in accordance with City Traffic Impact Study Standards. Such Traffic Impact Study shall include an assessment of the impacts of the proposed development upon vehicular, pedestrian, bicycle and transit transportation systems and services anticipated in the vicinity of the development for twenty (20) years from the anticipated date of completion of the proposed development. Such Traffic Impact Study shall include an analysis of all proposed measures to mitigate impacts of the proposed development. All Traffic Impact Studies shall be reviewed and approved by the City Engineer.

iii. City Services and City Infrastructure Impact Assessment. The applicant shall provide a public utility service impact analysis of the proposed use and its anticipated impacts upon the City's physical infrastructure and the service delivery of essential City services including water, sanitary sewer, storm sewer, police, fire and sanitation services. Such assessment shall include an analysis of the proposed development's anticipated service demand, adequacy of existing service infrastructure, and an assessment of the impacts the proposed use may have upon other users and the service provider. Such analysis shall also include any potential and proposed measures necessary to mitigate such impacts. Payment of costs for increasing service capability and/or over-sizing or upgrading of service infrastructure, as necessary to mitigate the impacts of the proposed development, shall be the responsibility of the applicant. All City services impact studies shall be reviewed and approved by the City Engineer.

iv. Stormwater Management. Stormwater runoff shall not be discharged into the public storm sewer system or into any natural drainage system, without being detained in accordance with this Code and without being treated to the most current quality standards, as prescribed by the Idaho Department of Environmental Quality in the catalog of Stormwater Best Management Practices for Cities and Counties. Stormwater facilities shall be designed to detain and release stormwater at a rate that shall not exceed the pre-development stormwater discharge rates for the two (2) year storm, ten (10) year storm, and twenty five (25) year storm events and shall be designed as treatment train systems (i.e. multiple devices and/or methods to improve water quality and increase evaporation). Treatment trains shall include a vegetative primary treatment component, such as a bio-filtration swale, filter strips, or other similar devices. The level of water quality treatment

DRAFT

shall be designed for two (2) year storm event post development flows. Stormwater facilities shall be aesthetically pleasing amenities consistent with Design Manual Central Features and Community Spaces Guidelines and Standards. Regionally viable vegetation shall be planted inside open earthen detention ponds. Above ground detention vaults or ponds with slopes greater than three to one (3:1) or those containing vertical walls shall be provided with a six foot (6') high fence or wall at the top of the slope for security and safety purposes. A type "B" landscape buffer yard, as described in this Zoning Code, shall be required around the outside perimeter of the fence or wall. Storage, display, or sale of chemicals, pesticides, fertilizers, liquid petroleum and any product containing any chemical listed in the Code of Federal Regulations Title 40, Chapter 1, Subpart d, Part 131.369, as amended, shall be prohibited in areas not protected from weather (such as parking lots) and from areas not located or designed to prevent contamination of stormwater runoff. All stormwater management plans shall be reviewed and approved by the City Engineer.

v. Standards for Materials Submitted. Each study, report, analysis, certification, or assessment required by the City or offered by the applicant shall be paid for by the applicant and shall be conducted by professionals educated, trained and experienced in the appropriate field and shall be mutually agreed upon by the applicant and the City.

e. Community Meeting Required. All proposed new Large Retail Establishments and expansions of existing Large Retail Establishments greater than thirty percent (30%) of the existing gross floor area shall require a community meeting in accordance with the following requirements:

i. Meeting Purpose. The purpose of the community meeting is to allow the applicant for a Large Retail Establishment to present the proposed development to the community and other members of the public prior to consideration by the City so that the parties can discuss and consider neighborhood and community impacts, mitigation, design and construction elements, and the like. Conduct by all participating in the community meeting should be respectful, should avoid personal attack, and should be directed toward gathering and exchanging information regarding the proposal(s).

ii. Meeting Notice and Location. Notice of a community meeting shall be given to all property owners within six hundred feet (600') of the subject property, shall be posted upon the subject property of a size and location that renders such notice visible and legible to persons in the vicinity of the subject property, published in the local newspaper and provided to local media. Such notice shall be provided at least fourteen (14) days before the community meeting. Mailed notice shall be made by U.S. mail to the current or last known property owners of record as determined by review of the records in possession of Latah County. Alternatively, the City may provide a list of property owners to the applicant upon request and receipt of the appropriate fee.

The community meeting shall be set at a date, time, and place reasonably calculated to facilitate the attendance of the public. Evening meetings during the work week are encouraged.

iii. Meeting Content and Conduct. The applicant or applicant's representative shall chair and conduct the meeting according to orderly procedures. The chair should provide the participants in the community meeting a fair chance to be heard. The chair will have the authority to recognize participants in the meeting and to maintain order in the conduct of the meeting. Formal rules of evidence will not apply during the meeting but the chair may limit the duration of comments or presentation where necessary to give the

DRAFT

broadest number of participants the opportunity to express their views. Each meeting shall be conducted so that those in attendance can discuss the project/proposal which is the subject of the application(s) to be filed. Where more than one (1) application is to be considered, the meeting shall include discussion of all related matters. For example, where there is to be a submittal for a rezoning along with the Large Retail Establishment, both shall be thoroughly discussed in the community meeting and shall satisfy any Neighborhood Meeting requirement of this Code.

iv. Submission of Meeting Materials Required. Where community meetings are required, the following community meeting materials shall be submitted with the application(s).

(a) Time, date and location of the community meeting,

(b) Names and addresses of property owners to whom notice was sent,

(c) Names and addresses of all attendees,

(d) Summary of comments, suggestions and discussion,

(e) Applicant's response to comments, suggestions and discussion, including any modifications made or intended to be made to the project proposal/application as a result of the community meeting comments,

(f) Materials utilized or submitted (including plans, proposals, designs, power point presentations, maps, handouts, petitions, letters, studies, etc.) shall be submitted with the application for the related project(s).

A verbatim transcript is not required nor is a video and/or audio tape (unless the applicant wishes to submit it). The summary of comments, suggestions and discussion should be extensive enough to allow the reader to understand what occurred.

f. Design Manual Review. All applications for new Large Retail Establishments and expansions of existing Large Retail Establishments shall be reviewed by the Zoning Administrator for conformance to the standards and requirements of the Design Manual. The Zoning Administrator shall review the site plan, landscape plan, and architectural building plans and building elevations for conformance with the requirements of the Design Manual.

i. Alternate Compliance Methods. The Zoning Administrator shall be authorized to approve alternate compliance methods to meet the purposes and intents of the specific requirements of the Design Manual where the Zoning Administrator finds such alternate compliance methods are in keeping with the intents and purposes of the Design Manual and where such alternate compliance methods will achieve equivalent or superior mitigation of impacts of the proposed Large Retail Establishment or its expansion.

ii. Design Review Decision. Upon completion of the design review, the Zoning Administrator may approve the proposed development, approve the proposed development with conditions of approval related to specific requirements of the Design Manual, or deny the proposed plans with specific direction to the applicant regarding what specific elements of the development plans must be modified to comply with the Design Manual.

iii. Design Review Decision Appeal. Appeals or design review decisions by the Zoning Administrator shall be made to the Council.

H. Telecommunications Facilities.

1. Applicability.

This Section shall apply to antenna towers, antenna support structures, antennas and their ancillary facilities (telecommunications facilities) any of which are used to provide

DRAFT

commercial telecommunications services. This Section shall not apply to noncommercial antenna towers exclusively used as accessory to a residential use on the same lot.

2. Purpose.

The provisions of this Section are intended to ensure that telecommunications facilities are located, installed, maintained and removed in a manner that:

a. Minimizes the number of antenna towers throughout the community;

b. Encourages the co-location of telecommunications facilities;

c. Encourages the use of existing buildings, light or utility poles, water towers or other structures for antenna mounting and discourages construction of new antenna towers;

d. Ensures that telecommunications facilities are located and designed to minimize visual impact on the surroundings.

e. Ensures that regulation of telecommunications facilities does not have the effect of prohibiting the provision of telecommunications services, does not unreasonably discriminate among functionally equivalent providers of such services, and allows the provision of adequate area coverage by such services.

3. Definitions.

a. *Anc*illary Facilities. Buildings, cabinets, vaults, enclosures, equipment, and the like required for operation of telecommunications systems.

b. Antenna. Any device that transmits and/or receives radio waves, microwaves, or other electro-magnetic radiation for voice, data or video communications purposes including, but not limited to, television, AM/FM radio, micro-wave, cellular telephone and similar forms of communications.

c. Antenna Support Structure. Any structure or building not constructed primarily for the purpose of supporting an antenna but that supports an antenna as a secondary or accessory use.

d. Antenna *Tower*. Any structure or pole erected primarily for the purpose of supporting one or more antennas that are used to provide commercial wireless communications or telecommunications services.

e. *Antenna Tower Height.* The overall vertical length of the antenna tower above ground level.

f. Co-location. Placement of one or more antenna(s) on an antenna support structure or the placement of an antenna on an antenna tower on which one or more antennas are already located.

g. Lattice Tower. An antenna tower characterized by a framework of lateral or diagonal cross members that stabilize the tower.

h. Monopole. An antenna tower that consists of a single upright pole, which is self-supporting and without supports or guys.

i. Telecommunications facilities. Antenna towers, antenna support structures, antennas and their ancillary facilities that are used to provide commercial wireless communications or telecommunications services.

j. Temporary Antenna Tower. An antenna tower established for the purpose of providing tele-communications services on a temporary basis for a special event or to temporarily replace an antenna tower while it is being repaired.

4. Use Regulations

a. The installation of lattice towers is prohibited except lattice towers that qualify and are permitted as temporary antenna towers. Replacement, relocation or alteration of non-

DRAFT

conforming lattice towers shall be subject to the Nonconformity Regulations in Section 4-1-6 of this Zoning Code.

b. A Conditional Use Permit shall be required before the installation, relocation, replacement, and/or alteration of an antenna tower that exceeds thirty-five feet (35') in height.

c. Co-location shall be a permitted use if the property upon which such antenna is located is within one of the following Zoning Districts: U, RO, NB, RTO, CB, GB, MB, or I. An antenna may be co-located as a permitted use on existing antenna towers and antenna support structures in all zoning districts if the antenna extends no more than eighteen feet (18') above, and projects no more than eight feet (8') horizontally away from the existing tower or support structure. Co-location shall also be a permitted use on nonconforming antenna towers if the antenna extends no more than eighteen feet (18') above, and projects no more than eight feet (8') horizontally away from, the nonconforming antenna tower.

d. A temporary antenna tower as defined herein shall be a permitted use in all zoning districts, subject to site plan approval by the Zoning Administrator. The duration of the temporary antenna tower at the site shall not exceed the special event time or the time reasonably needed to repair the antenna tower in need of repair.

5. Development Standards

a. Antenna Tower Setback from Highway Right-of-Way.

No antenna tower that exceeds sixty feet (60') in height shall be permitted within five hundred feet (500') of US Highway 95 and/or State Highway 8 rights-of-way unless the proposed site is in the U, MB, or I Zoning District, in which case the antenna tower shall be set back a minimum of one hundred feet (100') from said right-of-way.

b. Security.

Every telecommunications facility shall be protected from unauthorized access by appropriate security measures.

c. Lighting.

Every antenna and antenna tower shall not be lighted unless required by the Federal Aviation Administration or other state or federal agency having such authority, and such lighting shall not be more than the minimum required by such agency.

d. Noise Reduction.

In any SR, R-1, R-2, R-3, or R-4 Zoning District, and in all other Zoning Districts when the adjacent property is zoned SR, R-1, R-2, R-3, or R-4 or occupied by a dwelling, hospital, school, library, or nursing home or similar use, noise generating equipment shall be sound-buffered by means of baffling, barriers, or other suitable means to reduce sound level measured at the property line to forty five decibels (45 dB).

e. Signage.

The placement of signage on antenna towers is prohibited, except for the placement of security signage, which shall not exceed six (6) square feet on each side of the antenna tower and shall not be located higher than six feet (6') above grade. Additionally, one security sign not to exceed one (1) square foot may be provided on each fifty feet (50') of wall or fence enclosing the facility.

f. Antenna towers shall be separated from the property line of any adjacent property zoned SR, R-1, R-2, R-3, or R-4 at least a distance equal to the height of the antenna tower, and shall be separated from all other adjacent property lines at least a distance equal to one-half (1/2) the height of the antenna tower.

DRAFT

g. Aesthetic Considerations.

i. Antenna towers shall be painted a neutral color consistent with the natural or built environment of the subject site and the surrounding area unless otherwise required by the Federal Aviation Administration or any other state or federal agency having such authority.

ii. Equipment shelters or cabinets shall have an exterior finish compatible with the natural or built environment of the subject site and the surrounding area and shall also comply with any design guidelines applicable to the particular zoning district in which the facility is located.

iii. Antennas and cables shall be of a color identical to or closely compatible with that of the structure to which they are attached unless otherwise required by the Federal Aviation Administration or any applicable state or federal agency. Telecommunications facilities located above ground in or directly adjacent to any SR, R-1, R-2, R-3, and R-4 Zoning Districts shall be surrounded by a minimum six-foot (6') high decorative wall constructed of brick, stone, or textured concrete block. Said wall shall be surrounded by a Type "A" Landscape Buffer Yard planted adjacent to said wall or fence or at an alternate location providing equal or better buffering. Telecommunications facilities in all other Zoning Districts shall be surrounded by a minimum six-foot (6') high wall or solid or slatted fence. Said fence or wall shall be surrounded by a Type "A" Landscape Buffer Yard planted adjacent to said wall or fence or at an alternate location providing equal or better buffering.

iv. Vehicle or outdoor storage on any antenna tower site is prohibited unless otherwise permitted by the Zoning District in which the tower is located.

v. At least one (1) on-site parking stall with a vehicle turnaround area shall be provided at each antenna tower site. The parking area and driveway to it shall consist of asphalt, concrete, or gravel.

vi. Ancillary facilities located above ground for antennas in or directly adjacent to any SR, R-1, R-2, R-3, or R-4 Zoning District shall be set back a minimum of twenty-five feet (25') from any SR, R-1, R-2, R-3, or R-4 zoned property, unless the applicant can demonstrate that the specific proposal will present no greater adverse visual and audio impacts to surrounding properties. Above ground ancillary facilities in any other Zoning District shall be located a minimum of fifty feet (50') from any SR, R-1, R-2, R-3, or R-4 zoned property, unless the applicant can demonstrate that the specific proposal will present no greater adverse visual and audio impacts to surrounding properties.

6. Co-Location

a. Existing Antenna Towers.

Prior to the issuance of any permit to relocate, alter or modify any antenna tower, the tower owner shall provide to the City a notarized written commitment to make said antenna tower available for use by others subject to technical and structural limitations and reasonable financial terms. The failure of an antenna tower owner to agree to shared use or to negotiate in good faith with potential users shall be unlawful and, among other remedies of the City, shall be just cause for the withholding of the issuance of future antenna tower permits to such an owner as well as revocation of antenna tower permits for any antenna tower on which co-location is refused or unreasonably hindered.

b. New Antenna Towers.

Any new or relocated antenna tower eighty feet (80') or greater in height shall be designed and constructed to accommodate at least two (2) additional users unless a larger

DRAFT

number of users needs to be accommodated as indicated by the response to the Notice provisions herein. As an alternative, a smaller tower may be approved if the tower owner commits in writing to "swap out" to a larger tower when needed to allow co-location space for additional service providers. A notarized written commitment to shared use as specified in Subsection 6.a. above shall be submitted to the Zoning Administrator by the antenna tower applicant. The failure of the owner of an antenna tower built with a capacity for shared use to negotiate in good faith with potential users shall be unlawful and shall be a violation of this Ordinance and, among other remedies of the City, shall be just cause for the withholding of the issuance of future antenna tower permits to such an owner as well as revocation of antenna tower permits for any antenna tower on which co-location is refused or unreasonably hindered.

c. Antenna Tower Inventories.

Prior to the issuance of any permit to install, relocate, replace or alter any antenna tower, the tower owner shall furnish the Zoning Administrator an inventory of all of the owner's antennas and antenna towers in the City of Moscow and the Area of City Impact. The inventory shall include the reference name or number, or other description of location including a site map(s), structure type, height, type of antenna tower(s) or antenna support structure(s) and height of all existing antennas and an assessment of available ground space for the placement of additional equipment shelters for potential future users.

` d. Notice of Antenna Tower Permit Applications.

The applicant for any antenna tower permit shall have a copy of the application and a summary containing the height, design, location, type and frequency of antennas delivered by certified mail to all known and potential antenna tower users as identified by a list maintained by the Community Development Department. Proof of such delivery of the summary shall be submitted with the permit application to the City. Such notification shall be so mailed no less than sixty (60) days prior to Zoning Administrator decision or Board of Adjustment public hearing and shall specifically solicit co-location discussion between the applicant and recipients of the notice. The Zoning Administrator may establish a form required to be used for such notifications. Upon request, the Zoning Administrator shall place on a list the name and address of any user or prospective user of antenna towers to receive notification of applications. The failure of the party receiving such Notice to use this process or respond to any such Notice may be considered cause for denying requests by such party for antenna tower permits. Such response shall be provided in writing to the Zoning Administrator within forty five (45) days of mailing and shall contain a statement specifying desire to co-locate on the applicant's proposed tower and a statement regarding the responder's ability to accommodate the needs of the applicant on an existing tower or support structure owned or operated by the responder. Additionally, the Zoning Administrator shall cause notice of any required public hearing for a proposed antenna tower to be mailed to owners of property within six hundred feet (600') of the permit application site not less than sixty (60) days prior to the public hearing.

7. Permits Required

A building permit shall be required to construct, install, relocate, replace, or alter any antenna tower. An administrative zoning permit shall be required to locate or replace any antenna on an antenna tower or antenna support structure. A Conditional Use Permit shall be required as specified in Section 4 herein.

DRAFT

An application for any of the above-mentioned permits shall include or be accompanied by all of the information necessary to determine and document compliance with the regulations established herein. Where no application or permit form exists, the application shall be in the form of a letter signed and dated by the applicant, and the permit issuance shall be in the form of a letter of approval signed and dated by the Zoning Administrator or a dated signature by the Zoning Administrator on the applicable site plan.

Specific permit application submittal requirements shall be determined by the Zoning Administrator and may include, but are not limited to, the following:

a. Permit application.

b. Site plan.

c. Elevation drawing(s) of the antenna tower or antenna support structure, antenna(s) and ancillary facilities.

d. Description of proposed and required lighting including light locations. Documentation of required lighting, as specified in Section 5.c. herein, may be deferred until prior to issuance of building permit if not available at time of application submittal.

e. Any plans necessary to depict structural requirements.

f. Description of the number and types of antennas being proposed, as well as the expected or known capacity of the antenna tower in terms of the number of antennas the antenna tower can accommodate.

g. Antenna tower or antenna location study specifying the search process by which the proposed site was chosen.

h. Antenna tower inventory as specified in Section 6.c. herein.

i. Notarized written commitment to allow co-location/shared use as specified in Section 6. herein.

j. Documentation demonstrating compliance with non-ionizing electromagnetic radiation (NIER) or radio frequency (RF) emissions standards as established by the Federal Communications Commission (FCC). Such documentation may be deferred until prior to issuance of building permit if not available at time of application submittal.

k. Current FCC license to operate.

l. Documentation of a review by the Federal Aviation Administration (FAA) and/or the Aviation Division of the Idaho Transportation Department (ITD). Such documentation may be deferred until prior to issuance of building permit if not available at time of application submittal.

m. Name and address of the property owner, telecommunications service provider, and owner of the telecommunications facility on the permit application, and a written statement of approval of the application by the property owner.

n. Description of proposed security measures as required in Section 5.b. herein.

8. Findings for Conditional Use Permit.

Before a Conditional Use Permit for an antenna tower may be issued, the applicant must demonstrate, and the Zoning Board of Adjustment must find, compliance with all of the following:

a. No existing antenna towers or antenna support structures within the necessary geographic area for the applicant's antenna tower meet the applicant's requirements considering (a) height, (b) structural integrity, or (c) that there are other prohibitive conditions that render existing antenna towers or antenna support structures within the applicant's required geographic area unsuitable.

DRAFT

b. That the design of the antenna tower, including the antennas and ancillary facilities, minimizes visual impact and otherwise complies with provisions and intent of this Section.

c. That the proposed antenna tower location minimizes the number and/or size of antenna towers or antenna support structures that will be required in the area.

d. That the applicant has not previously failed to take advantage of reasonably available shared use opportunities or procedures provided by this Ordinance or otherwise.

These findings shall be required in addition to those required for the Reasoned Statement of Relevant Criteria and Standards provided in Section 4-8-4 of the Zoning Code.

9. Abandonment and Removal.

All telecommunications facilities shall be removed by the owner of the facility, by the operator of the facility, and/or by the property owner within six (6) months of the time that the facility has substantially ceased being used to provide telecommunications services to the public. Removal shall not be required when the owner or operator of the facility has, within the aforementioned six (6) months, filed with the City a written request to reuse the antenna tower and the City has approved such request. Such written request shall detail the circumstances that justify why the antenna tower should not be removed, why it will be unused for six (6) months or more, and shall commit to a date certain, not to exceed twelve (12) months from the date of last use, by which time the antenna tower will again provide telecommunications services to the public. Before issuance of an antenna tower permit, the applicant for any antenna tower permit shall provide to the City financial security, such as but not limited to an open-ended bond, to ensure removal of the antenna tower and ancillary facilities after the facility is no longer being used to provide telecommunications services to the public.

10. Affirmative Duty to Keep City Informed.

All telecommunications service providers having telecommunications facilities in the jurisdiction of the City shall be required to report in writing to the Zoning Administrator any change in the status of their operations. Change in status shall include, but is not limited to, the following:

a. Change in or loss of license from the FCC to operate.

b. Receipt of notice of failure to comply with the regulations of any other authority having jurisdiction over the business or facility.

c. Change in ownership of the company that owns the telecommunications facilities or that provides telecommunications services.

d. Loss or termination of lease with the property owner or the owner of the telecommunications facilities.

e. Abandonment of a facility or non-use of a facility for a period of six (6) months or longer.

All telecommunications service providers having facilities in the jurisdiction of the City shall file with the Zoning Administrator an annual written statement verifying continued use of each of their facilities in the City's jurisdiction as well as continued compliance with state and federal agency regulations.

I. Temporary Uses.

1. Applicability and Purpose. It is the intent of this Section to allow Temporary Uses upon developed or undeveloped commercial property within the City, subject to the following standards. These standards are intended to reduce the potential traffic, parking, safety, and nuisance issues associated with the short term nature of Temporary Uses.

DRAFT

2. Specific Standards.

a. Site Access. Vehicular ingress and egress from the subject property shall be from an established vehicular approach or a temporary approach as approved by the City Engineer. Approaches shall be clearly identified and delineated and shall not present a traffic hazard to the adjacent roadway as determined by the City Engineer.

b. Site Circulation. Vehicular circulation shall be delineated and maintained on the subject property in order to reduce the risk of vehicular conflicts and ensure orderly circulation.

c. Setbacks. All temporary structures shall meet the minimum yard setback requirements of the underlying zoning district.

d. Vision Triangle. All temporary structures shall be located outside of street intersection sight triangles. All displays, goods, or objects placed within street intersection sight triangles shall be in accordance with the City Standard Construction Specifications and drawings as adopted by the Council.

e. Duration. Each Temporary Use may not exceed forty-five (45) days per calendar year,

f. Nuisances. A Temporary Use shall not result in dust, noise, tracking of dirt in the public right-of-way, or other nuisances generated upon the subject property.

3. Permit Required. A Temporary Use Permit shall be required for any Temporary Use conducted on an undeveloped property or a property which does not have an existing developed parking area.

J. Townhouses.

1. Building Development Standards.

a. Building Orientation and Front Entry Feature. The front and main entrance of all townhouse units shall be oriented toward and shall face the adjacent public street.

b. Front Entry Feature. Townhouse units shall include a porch or stoop entry feature that clearly establishes the location of the principal entry of the townhouse unit and the orientation of the unit to the adjacent public street. This shall be accomplished through the provision of one of the following elements:

i. covered front porch feature of no less than four feet (4') in depth and six feet (6') in width;

ii. covered front stoop of no less than four feet (4') in depth and four feet (4') in width; or

iii. any other significant entry feature deemed equivalent by the Zoning Administrator.

c. Façade and Roof Line Articulation. Townhouses should be designed as a unified building mass with common architectural styling and details. The building mass shall be varied by material and color variations, shifts in roof profiles and variation at corner units. Individual units shall be expressed through façade articulation or vertical divisions between individual units and through roof structure variation that expresses the individuality of each unit.

d. Fenestration. Townhouse units shall include door and/or window openings upon all front and exterior side walls to provide adequate natural light, provide architectural detailing, and to enhance security upon adjacent sidewalks and streets. Windows and doors shall occupy no less than ten percent (10%) of front wall and exterior side wall areas.

DRAFT

e. Building Height. Maximum building height shall be as specified within the applicable Zoning District.

f. Unit Grouping and Spacing. Townhouse buildings shall contain no more than eight (8) contiguous units. Spacing between townhouse buildings shall be no less than sixteen feet (16'). Spacing between townhouse buildings shall include a four foot (4') wide pedestrian easement and sidewalk joining the alley, or rear of the townhouse development, to the public sidewalk adjacent to the front public street.

2. Parking and Access.

a. Street Access. Rear vehicular access to townhouse developments via an existing public alley or a private drive within the townhouse development is preferred; however, front vehicular access can be allowed in accordance with the standards herein.

b. Curb Cut Minimum Spacing. Curb cut spacing shall be no less than twenty four feet (24') apart, as measured from the two closest points of the curb cuts. Front loaded townhouse units curb cuts shall be no more than twenty feet (20') in width and such curb cuts shall be used to serve the two (2) adjacent units. Curb cuts for private drives that provide access to rear loaded townhouse units shall be no more than twenty four feet (24') in width.

c. Garage Design. The garage door on front loaded townhouse units shall occupy no more than sixty percent (60%) of the townhouse unit width. Front loaded garage doors shall be recessed from the surrounding structure and shall include design features and windows that complement the townhouse design and shall be painted to match the townhouse unit served by such garage.

d. Guest Parking. Townhouse developments of more than twenty four (24) units shall provide off-street guest parking at the rate of one (1) stall per each four (4) townhouse units. Such guest parking shall be located within the required spacing between townhouse buildings or at the rear of the townhouse buildings.

3. Open Space Requirements. Open space shall be provided as follows:

a. Private Open Space Requirement. Each townhouse unit shall provide a minimum of one hundred eighty (180) square feet of functional open space which may be provided via a private yard, balcony, deck, roof garden or patio area. The smallest dimension of such open space shall not be less than eight feet (8') and fencing or other privacy screening shall be provided between adjacent private open space areas. The required front entry feature and required front yard area shall not be used to satisfy the private open space requirement.

b. Common Open Space Requirement. Townhouse developments of more than twenty four (24) units shall provide functional common open space of seventy five (75) square feet per unit. Such common open space shall be of a functional size, the smallest dimension of which shall not be less than thirty feet (30') and shall include landscaped and turf areas and shall include at least two (2) different furnishings such as benches, picnic tables, children's play equipment or other similar items.

4. Landscaping. All townhouse projects shall include aesthetically pleasing landscaping material within the required front and street side yard areas of sufficient quantity to buffer and soften the building massing. Such landscaping shall include a combination of trees, shrubs and other landscaping materials. Plans for such landscaping shall be required as part of the building permit application and shall be subject to approval of the Zoning Administrator.

(Ord. 2010-24, 11/15/2010; 2011-15, 09/19/2011; 2012-23, 12/03/2012; 2013-15, 08/19/2013; 2015-06, 04/06/2015; 2015-07, 05/04/2015).

DRAFT

Sec. 3-6. Limitations on Uses Table.

LIMITATIONS ON USES

	FR	SR	R-1	R-2	R-3	R-4	RO	NB	RTO	CB	GB	MB	I	UMC	U
All uses other than dwellings:															
No more than 35% of lot area shall be covered by buildings			X	X	X	X									
Off-street parking shall not be located in required front or street side yards			X	X	X	X									
Type-A landscape buffer shall be provided along any property line abutting property zoned SR, R-1, R-2, or R-3			X	X	X	X									
All uses shall be conducted wholly and entirely within enclosed buildings, except:								X	X			X			
Building material yards												X			
Car washes												X			
Drive-in theaters, miniature golf courses, commercial amusement parks and similar uses												X			
Gasoline service stations												X			
Kennels												X			
Landscape supply yards												X			
Market Garden, Community Garden, Accessory Garden								X	X			X			
Movable displays incidental to the major usage, except that such displays shall be confined to privately owned property												X			
Outdoor advertising structures												X			
Outdoor dining areas for restaurants								X	X			X			
Outdoor play areas necessary for schools or daycares								X	X						
Parking and loading areas								X	X			X			
Public utility installations												X			
Sales display areas for automobiles, mobile homes, trailers, boats and heavy duty equipment												X			
Temporary uses, as permitted by this Code												X			
All products made incident to a permitted use which are manufactured, fabricated, processed or treated on the premises shall be sold primarily on the premises	X									X	X				
Uses, buildings and structures that utilize electricity and/or water and are accessory to a single family or duplex residence shall be serviced by the same electrical and/or water meter as the single family or duplex residence. The Zoning Administrator may allow seperate meters in the event that the distance between the principal use and the accessory use is determined to be exceptionally long.	X	X	X	X	X	X									
	FR	SR	R-1	R-2	R-3	R-4	RO	NB	RTO	CB	GB	MB	I	UMC	U
Off-street parking areas associated with a principal structure on a lot shall be located behind or to the side of the principal structure that it serves. No off-street parking shall be located between the principal structures and the adjacent principal public street or pedestrian walkway.														X	
Operations conducted on the premises shall not constitute a nuisance beyond the property lines by reason of smoke, fumes, odor, steam, gasses, vibration, noise, hazards, or other causes									X	X	X			X	
Gasoline stations: pump islands shall not be closer than fifteen feet (15') to any street, property line, or public right-of-way												X	X		
Accessory buildings customarily incident to any of the permitted uses shall be located on the same site with the principal building												X	X		
Accessory structures encroaching into the minimum rear yard setback shall not occupy more than fifty percent (50%) of the area of the required rear yard for the parcel	X	X	X	X	X	X	X	X	X						
Uses specifically not permitted:															
Uses involving the use of machinery out of doors that generate significant noise, dust or odors									X						

Sec. 3-7 Performance Standards. Any dissemination incident to a permitted use shall comply with the standards established in this Section.

A. Unless otherwise permitted by Title 10, Section 11 of this Code, the noise emanating from a premise used for industrial activities shall be muffled so as to not become objectionable due to intermittent beat, frequency or shrillness, and where an industrial use adjoins a residential zoning district, the noise loudness measured at the boundary line shall not exceed forty (40) decibels between the hours of eleven thirty (11:30) p.m. and six (6:00) a.m. and sixty (60) decibels at other hours.

B. Arc welding, acetylene torch cutting or similar processes shall be performed so as not to be seen from any point beyond the outside of the property.

C. In terms of fire and safety hazards, the storage and handling of inflammable liquids, liquefied petroleum, gases and explosives shall comply with rules and regulations falling under the jurisdiction of the City Fire Chief, the laws of the State and other local ordinances.

Bulk storage of inflammable liquids below ground shall be permitted, and the tank shall be located not closer to the property line than the greatest dimension (diameter, length or height) of the tank.

D. Provisions must be made for necessary shielding or other preventative measures against interferences occasioned by mechanical, electrical, electronic and nuclear equipment, uses or processes with electrical apparatus in nearby buildings or land uses.

E. The emission of obnoxious odors of any kind shall not be permitted nor the emission of any toxic or corrosive fumes or gases. Dust created by an industrial operation shall not be exhausted or wasted into the air.

F. The emission of smoke or particulate matter of a density equal to or greater than number three (3) of the Ringelmann Chart as currently published and used by the U.S. Bureau of Mines, is prohibited at all times.

Dust and other types of air pollution borne by the wind from such sources as storage areas and roads, shall be minimized by appropriate landscaping, paving, oiling or other acceptable means. Emission of particulate matter in excess of two-tenths (0.2) grain per cubic foot of conveying gas or air measured at any property line, is prohibited.

G. Smoke or emission rates: The rate of emission of particulate matter from all sources on any property shall not exceed a net weight of one (1) pound per acre of property during any one (1) hour.

H. Liquid and solid wastes: Storage of animal or vegetable waste which attract insects or rodents or otherwise create a health hazard, shall be prohibited. No waste products shall be exposed to view from eye level from any property line.

I. Open storage: All storage of building materials, tires, wheels, fencing or other similar items which are stacked or which must be moved by forklift, front-end loader or a similar method shall be located within an area not closer than ten feet (10') from the street right-of-way line or shall be enclosed with a heavy wire fence or of a similar type, with the top of said fence not less than six feet (6') in height, or by an attractive hedge or board fence at least six feet (6') in height. In case of the open storage of lumber, coal or other combustible material, a roadway shall be provided, graded, surfaced and maintained from the street to the rear of the property, to permit free access of fire trucks at any time.

(Ord. 97-33, 11/3/97; 2005-07, 02/07/2005)

~~**Sec. 3-1. Purpose.**~~

DRAFT

~~The commercial Zoning Districts created by this Chapter are established to promote the orderly development and maintenance of commercial and industrial areas that are compatible with adjacent residential land uses and supplied with adequate existing or potential public services and facilities. The zoning regulations contained herein recognize that commercial and industrial land uses can have substantial impacts on the community as a whole and upon the public services and facilities which are used by City residents and residents of other communities. Zoning for commercial and industrial uses shall be based on the following factors:~~

~~1. The physical character of the site;~~

~~2. Quality of existing public facilities and utilities;~~

~~3. Costs and feasibility of expanding or modifying existing public facilities;~~

~~4. Current land use in the vicinity of the site;~~

~~5. Capacity of the community transportation network within the vicinity of the site and throughout the community;~~

~~6. Community development policies as stated in the Comprehensive Plan; and~~

~~7. The need for more commercial or industrial zoned land in the City or the neighborhood of the site.~~

~~Sec. 3-2. Residential/Office Zoning District (RO).~~

~~A. Intent: The RO Zoning District is a moderately intensive zone including both offices and high density housing. It serves as a transitional Zoning District between residential Zoning Districts and commercial or industrial Zoning Districts. The RO Zoning District is appropriately applied in the following circumstances:~~

~~1. On the perimeter of commercial or industrial districts where they abut residential land uses;~~

~~2. Where transportation network use is greater than desirable for lower density residential uses;~~

~~3. Where landforms create sites which are reasonably accessible by transportation systems and which are buffered from nearby residential areas; and~~

~~4. Where the development patterns in a neighborhood will allow development of moderate intensity to occur without producing adverse visual impact or harm to the transportation network.~~

~~B. Permitted Principal Uses and Structures:~~

~~1. Single family dwelling.~~

~~2. Two family dwelling.~~

~~3. Twinhome dwelling.~~

~~4. Townhouse dwelling, subject to the Specific Use Standards of Chapter 12 of this Code.~~

~~5. Multiple family dwelling.~~

~~6. Establishments that provide clerical, professional, or other skilled services and which do not involve substantial fabrication, repair, or sale of goods. Examples of such uses include, but are not limited to, the offices of professionals such as doctors, lawyers, accountants, counselors, architects, and engineers; insurance and business consultant offices; lending and financial institutions; administrator's offices; beauty and barber shops; and graphic artist and photographic studios.~~

~~7. Bed and breakfast inn.~~

~~8. Boarding house.~~

~~9. Public parks and recreation facilities; provided, however, that any service yard located within said park shall be maintained no closer than fifty feet (50') to a property line of an adjoining residence or a street frontage.~~

~~10. Noncommercial, private recre-ation facilities, including golf courses.~~

~~11. Group day care facility, small day care facility, or large day care facility.~~

~~12. Parking lots serving uses permitted in the RO Zoning District and uses in adjacent commercial Zoning Districts.~~

~~13. Residential Rental Unit.~~

~~14. Market Garden, Community Garden, Accessory Garden, including retail sales.~~

~~C. Permitted Accessory Uses and Structures:~~

DRAFT

1. Attached or detached private garages and workshops not to exceed one thousand (1,000) square feet or six hundred (600) square feet per dwelling unit.

2. Retail sales, provided the commodities sold are a normal incidental function of the principal use and are sold within a building on the premises. Examples of such permitted retail sales include but are not limited to the sale of glasses at an optometrist's office and hair care products at a hair salon.

3. Family day care facility.

4. Uses, buildings and structures that utilize electricity and/or water and are accessory to a single family or duplex residence shall be serviced by the same electric and/or water meter as the single family or duplex residence.

5. Keeping of animals and fowl as permitted by this Code.

D. Conditional Uses

1. Schools, commercial schools and educational institutions with specific consideration given to traffic, parking, safety and nuisance issues, as well as cumulative impacts of and proximity to existing schools, commercial schools and educational institutions in the vicinity.

2. Churches, convents, monasteries, synagogues, mosques and other similar places of worship and religious practice.

3. Libraries, galleries and museums that are open to visitation by the general public during regular, established business hours.

E. Special Uses:

1. Public service and utility facilities not listed as permitted uses in this Zoning District such as fire stations, police stations, telephone switching facilities, fair grounds, cemeteries, national guard armories, fire training facilities, pumping stations, electric substations, hospitals, and similar public service facilities necessary to serve the neighborhood and community, including signage and other necessary accessory structures.

2. Public oriented commercial services such as nursing homes, convalescent and rest homes for the aged, retirement homes and hospitals, except alcoholic, mental and penal hospitals.

F. Limitations On Uses: None specified.

G. Lot Requirements:

1. Residential Uses:

a. Minimum Lot Area:

i. Single family, two (2) family, and multiple family dwellings – five thousand (5,000) square feet or eight hundred (800) square feet of lot area per dwelling, whichever is greater.

ii. Twinhome dwellings – two thousand two hundred fifty (2,250) square feet.

iii. Townhouse dwellings – one thousand eight hundred (1,800) square feet.

b. Minimum Lot Width:

i. Single family, two (2) family and multiple family dwellings - fifty feet (50').

ii. Twinhome dwellings – twenty five feet (25').

iii. Townhouse dwellings – eighteen feet (18').

2. Non-Residential Uses:

a. Minimum Lot Area - none specified.

b. Minimum Lot Width - none specified.

H. Minimum Yard Requirements:

1. Residential Uses:

a. Front - ten feet (10').

b. Side - five feet (5'); the sum of the two (2) side yards shall be at least fifteen feet (15') for lots greater than fifty-five feet (55') in width and ten feet (10') for lots fifty-five feet (55') or less in width. Eight feet (8') for twinhome and townhouse exterior side yards.

c. Rear - twenty feet (20').

d. Street side - ten feet (10').

e. Twinhome dwelling and Townhouse dwelling interior side – none.

2. Non-Residential Uses:

DRAFT

a. Front - ten feet (10').
b. Side - five feet (5').
c. Rear - ten feet (10'); twenty feet (20') when rear yard abuts residentially zoned land.
d. Street side - ten feet (10').

I. Required Open Space: A minimum of seventy-five (75) square feet of functional open space shall be provided per dwelling unit; a minimum of four hundred (400) square feet of functional open space shall be provided for each lot on which a residential use is located.

J. Maximum Height of Structures: forty feet (40').

K. Signs: Pursuant to the Moscow Sign Code.

Sec. 3-3. Neighborhood Business Zoning District (NB).

A. Intent: The NB Zoning District is the lowest intensity commercial Zoning District permitted within the City. It is intended to apply to areas of less than two (2) acres, where commercial services may be provided in convenient locations serving adjoining residential neighborhoods rather than the community as a whole. The commercial services permitted are those where traffic generation, access requirements, impacts of lighting, neighborhood need for services, and noise production will be compatible with residential uses. The NB Zoning District is appropriately applied in the following circumstances:

1. Where local commercial facilities will serve the everyday needs of a limited neighborhood area;
2. Where activity levels associated with small scale office development can be accommodated or tolerated by surrounding land uses and existing public services;
3. Where a neighborhood core is identified which is easily accessible by pedestrian or vehicular circulation; and
4. Where such commercial development will result in minimal interference with residential uses in the vicinity of the NB Zoning District.

B. Permitted Principal Uses and Structures:

1. Residential uses, including Residential Rental Unit, provided that any dwellings located on the ground floor shall be located behind commercial uses in a manner that will not interrupt commercial frontage on the primary street, except as otherwise authorized herein. Residential uses may be allowed on the ground floor on secondary street frontages of corner lots.
2. Retail sales and personal services, including restaurants, but limited to sale of goods and services are to the household consumer. Excluded from this Zoning District are dealers in large commodities such as automobiles, appliances, furniture, and other goods of similar nature or character.
3. Establishments that provide clerical, professional, or other skilled services which do not involve substantial fabrication. Examples of such uses include, but are not limited to, the offices of professionals such as doctors, lawyers, accountants, counselors, architects, and engineers; insurance and business consultant offices; administrator's offices; beauty and barber shops; and graphic and photographic studios.
4. Group day care facility or small day care facility.
5. Community or neighborhood center operated by an agency of local government.
6. Parking facilities for uses permitted within the NB Zoning District.
7. Churches, convents, monasteries, synagogues and mosques.
8. Market Garden, Community Garden, Accessory Garden, including retail sales.
9. Mortuaries.

C. Permitted Accessory Uses and Structures: Family day care facility.

D. Conditional Uses:

1. Large day care facility.
2. Uses involving the assembly, treatment, processing, or fabrication of consumer products to be sold at retail on the premises. Such uses shall not utilize a structure which exceeds one thousand (1,000) square feet of gross floor area. No operation conducted on the premises shall constitute a public nuisance beyond the property lines by reason of smoke, fumes, odor, steam, gasses, vibration, noise, hazards or other causes.

DRAFT

3. Schools, commercial schools and educational institutions, with specific consideration given to traffic, parking, safety and nuisance issues, as well as cumulative impacts of and proximity to existing schools, commercial schools and educational institutions in the vicinity.

4. Residential uses, including Residential Rental Unit, located on the ground floor which are not located behind commercial uses or otherwise authorized herein.

E. Limitations On Uses:

All uses shall be conducted wholly and entirely within enclosed buildings, except:

1. Market Garden, Community Garden, Accessory Garden, including retail sales;
2. Outdoor dining areas for restaurants;
3. Outdoor play areas necessary for schools or daycares;
4. Parking and loading areas.

F. Lot Requirements:

1. Residential Uses:
   a. Minimum Lot Area - five thousand (5,000) square feet; eight hundred (800) square feet per dwelling unit, whichever is greater.
   b. Minimum Lot Width - fifty feet (50').
2. Non-Residential Uses:
   a. Minimum Lot Area - none specified.
   b. Minimum Lot Width - none specified.

G. Minimum Yard Requirements:

1. Front - twenty feet (20').
2. Side - ten feet (10').
3. Rear - twenty feet (20').

H. Required Open Space: A minimum of seventy-five (75) square feet of functional open space shall be provided per dwelling unit; a minimum of four hundred (400) square feet of functional open space shall be provided for each lot on which a residential use is located.

I. Maximum Height of Structures: forty feet (40').

J. Signs: Pursuant to the Moscow Sign Code.

Sec. 3-4. Research, Technology and Office Zoning District (RTO).

A. Intent: The RTO Zoning District is created to take advantage of technology developed and expertise available at the University of Idaho and the transfer of technology to the private sector. It is intended that a high quality environment which is conducive to the successful operation and attraction of research and technology-based businesses be established in this Zoning District compatible with the University of Idaho campus and the City Central Business Zoning District. This Zoning District is appropriate where adequate infrastructure is available and where neighboring land uses will enhance, or not detract from, the intent and uses of the RTO Zoning District. The RTO Zoning District should be located adjacent to or in close proximity to arterial or collector streets. Permitted uses include but are not limited to those directly involved in research and development; manufacture of prototype goods or goods from prototype machinery or processes; limited light manufacturing beyond prototype compatible with a research and development environment; and a limited range of office uses that could provide services to the research and development functions or could be converted to research and development uses as the market for such space warrants.

B. Permitted Principal Uses and Structures: In an RTO Zoning District, only the following are permitted as hereinafter specifically provided and allowed in this Chapter, and are subject to the off-street parking requirements and general provisions and exceptions set forth in this Zoning Code:

1. Research and development establishments that offer support to the research and technology purposes of the Zoning District, including the manufacture or creation of prototype products or processes.
2. Light manufacturing (as defined in the Zoning Code) that offers support to the research and technology purposes of the Zoning District.
3. Professional, executive and clerical offices that offer support to the research and technology purposes of the Zoning District. "Professional" as used in this subsection, includes, but is not limited to:

DRAFT

~~attorneys, accountants, tax consultants, engineers, architects and other professional enterprises and offices which can support the research and technology purposes and uses of the Zoning District. Medical offices engaged primarily in the provision of health care to patients are excluded from this Zoning District.~~

~~4. Financial services that offer support to the research and technology purposes of the Zoning District, except full-service banks and savings and loan institutions. Financial services shall include, but not be limited to, brokerage firms, investment firms, and insurance firms.~~

~~5. Publishing houses that offer support to the research and technology purposes of the Zoning District.~~

~~6. One (1) commercial eating and drinking establishment shall be permitted in an RTO Zoning District with less than twenty five (25) acres; two such establishments shall be permitted in an RTO Zoning District with twenty five (25) to fifty (50 acres; and three such establishments shall be permitted in an RTO Zoning District with more than (50) acres.~~

~~7. Family day care facilities, group daycare facilities, small and large day care facilities as defined by this Code that offer support to the research and technology purposes of the Zoning District.~~

~~C. Permitted Accessory Uses and Structures: In an RTO Zoning District, only the following uses are permitted as accessory uses and as hereinafter specially provided and allowed by this Chapter:~~

~~1. Off street parking lots and structures providing parking for uses within the RTO Zoning District.~~

~~2. Indoor storage of products produced in the RTO Zoning District.~~

~~3. Cafeterias.~~

~~4. Retail sales in support of the intent, purposes and permitted uses of the RTO Zoning District.~~

~~5. Accessory Gardens.~~

~~D. Conditional Uses:~~

~~Commercial schools directly associated with a research and technology business. Specific consideration shall be given to cumulative impacts of and proximity to existing commercial schools in the vicinity.~~

~~E. Special Uses:~~

~~Retail sales directly related to a permitted use in the RTO Zoning District conducted at a higher level of intensity than an accessory use.~~

~~F. Limitations On Uses:~~

~~1. The following standards are or will be met:~~

~~a. Noise. At the property line the sound pressure level of noise radiated from a facility shall conform to the requirements of the Code.~~

~~b. All uses and related commercial activities shall be conducted wholly and entirely within an enclosed building, except for parking and loading areas, outdoor dining areas for eating and drinking establishments, and outdoor play areas necessary for day care facilities.~~

~~2. Uses specifically not permitted within the RTO Zoning District, include, but are not limited to, the following:~~

~~a. Automotive wrecking, repair, sales or storage.~~

~~b. Concrete mixing plants.~~

~~c. Drive-up windows.~~

~~d. Residential uses.~~

~~e. Uses involving the use of machinery out-of-doors that generate significant noise, dust or odors.~~

~~f. Motels, hotels and recreational vehicle parks.~~

~~g. Self-service storage, ware-houses, except as a secondary use for the storage of products produced in the RTO Zoning District only.~~

~~h. Bulk storage or sale of fertilizers, chemicals, or petroleum products.~~

~~i. Rock crushing and extraction.~~

~~j. Medical offices engaged primarily in the delivery of health care.~~

~~k. Sale of building materials, hay, grain and bulk garden supplies.~~

~~l. Sanitary landfill, composting or incineration.~~

DRAFT

~~m. Slaughterhouse, animal rendering plant.~~
~~n. Bulk storage of fireworks or other explosive materials.~~
~~o. Tannery.~~
~~p. Transit or trucking terminal.~~
~~q. Construction businesses.~~
~~r. Laundry businesses.~~
~~s. All other heavy manu-facturing uses not previously specified.~~
~~t. Residential Rental Unit.~~

~~G. Lot Requirements: None specified.~~

~~H. Minimum Yard Requirements:~~

~~1. Front - Every lot in the RTO Zoning District shall have a front yard of not less than twenty-five feet (25') which shall be landscaped with trees, shrubs and ground cover.~~

~~2. Side and Rear - When adjacent to R-1, R-2, R-3 or R-4 Zoning Districts, twenty feet (20') or equivalent to the height of the building, whichever is greater.~~

~~I. Required Open Space: None specified.~~

~~J. Maximum Height of Structures: Sixty-five feet (65').~~

~~K. Signs: Pursuant to Moscow Sign Code.~~

~~Sec. 3-5. Central Business Zoning District (CB).~~

~~A. Intent: The principal purpose of the CB Zoning District is to provide a location for groups of compatible commercial uses having the common characteristic of not involving more than incidental and minimal assembly, fabrication or storage of commodities; for example, establishments dispensing retail commodities, and those providing professional and personal services to the individual. The CB Zoning District is the most intensive commercial Zoning District. To promote pedestrian use, unbroken, street-level, commercial frontage is encouraged in this Zoning District.~~

~~B. Permitted Principal Uses and Structures:~~

~~1. Retail establishments excluding firms selling bulky items, such as building materials, mobile homes, trailers, boats and heavy equipment and excluding Large Retail Establishments, Categories 1 and 2.~~

~~2. Professional, financial, business and medical offices, and any enterprise rendering professional or personal services.~~

~~3. Repair shops for commodities, such as household appliances, bicycles, and shoes.~~

~~4. Eating and drinking establishments catering primarily to on-premises consumers; entertainment, dancing and recreation establishments, including restaurants, bars, theaters, video arcades, dance halls and physical fitness centers.~~

~~5. Printing and publishing houses, including newspaper publishing.~~

~~6. Lodges, private clubs, and fraternal societies.~~

~~7. Churches, synagogues, mosques, governmental offices, libraries, museums, art galleries, police and fire stations, and similar public or private institutions.~~

~~8. Residential uses, including Residential Rental Unit, provided that dwellings located on the ground floor are located behind commercial uses in a manner that they will not interrupt commercial frontage.~~

~~9. Public utility installations relating directly to local distribution of services, including switching and transmission stations, but not including warehouses and service yards.~~

~~10. Publicly and privately owned and operated off-street parking facilities if open to the public; however, any such area shall not be used as a sales or storage area for mobile homes, trailers, boats or heavy-duty equipment.~~

~~11. Drive-up windows associated with financial institutions.~~

~~12. Farmers' Markets.~~

~~13. Market Garden, Community Garden, Accessory Garden, including retail sales.~~

~~14. Temporary Uses, subject to the Specific Use Standards of Chapter 12 of this Zoning Code.~~

~~C. Permitted Accessory Uses and Structures:~~

DRAFT

~~Family day care facility.~~

~~D. Conditional Uses:~~

~~1. Hotels and motels.~~

~~2. Mortuaries.~~

~~3. Drive-up windows other than those permitted under Code Section 4-3-5(B)(11).~~

~~4. Automobile sales.~~

~~5. Establishments providing prepared food primarily for take-out or delivery.~~

~~6. Gasoline service stations and car washes. These uses shall be subject to detailed review of traffic access and circulation plans.~~

~~7. Group day care facility, small day care facility, or large day care facility.~~

~~8. Commercial schools and educational institutions, with specific consideration given to traffic, parking, safety and nuisance issues, as well as cumulative impacts of and proximity to existing commercial schools and educational institutions in the vicinity and impact on availability of retail and office space, especially at street level. Applications for educational institutions shall be accompanied by a detailed, written description of plans, including present student enrollment, staff on site, site development and future enrollment growth and any phasing thereof.~~

~~9. Residential uses located on the ground floor which are not located behind commercial uses, with specific consideration given to preservation of retail frontage(s) and/or suitability of building for ground floor commercial use.~~

~~E. Limitations On Uses:~~

~~1. All products made incident to a permitted use which are manufactured, fabricated, processed or treated on the premises shall be sold primarily on the premises.~~

~~2. Operations conducted on the premises shall not constitute a nuisance beyond the property lines by reason of smoke, fumes, odor, steam, gasses, vibration, noise, hazards, or other causes.~~

~~3. Permitted uses in the CB Zoning District are not subject to the off-street parking schedule of Code Section 4-6-5; however, all other provisions of Code Section 4-6-5 shall apply.~~

~~F. Minimum Lot Requirements: None specified.~~

~~G. Minimum Yard Requirements: None specified.~~

~~H. Required Open Space: None specified.~~

~~I. Maximum Height of Structures: sixty-five feet (65').~~

~~J. Signs: Pursuant to the Moscow Sign Code.~~

~~Sec. 3-6. General Business Zoning District (GB).~~

~~A. Intent: The principal purpose of the GB Zoning District is to provide for the location and grouping of compatible retail enterprises having the common characteristics of dispensing commodities, providing professional services or providing personal services to the individual, but which do not involve more than incidental or limited assembly, fabrication or storage of commodities. The GB Zoning District is appropriately applied in the following circumstances:~~

~~1. On the periphery of the CB Zoning District where retail uses are appropriate yet the distance to community parking facilities indicates a need for on-site parking.~~

~~2. At dispersed commercial centers where the grouping of retail and office uses is appropriate to serve community or regional needs.~~

~~B. Permitted Principal Uses and Structures:~~

~~1. Retail sales enterprises, excluding firms selling bulky items such as building materials, mobile homes, trailers, boats and heavy equipment.~~

~~2. Professional, financial, business and medical offices, and any enterprise rendering professional or personal services.~~

~~3. Repair shops for commodities such as household appliances, bicycles, and shoes.~~

~~4. Eating and drinking establishments catering primarily to on-premises consumers, entertainment, dancing and recreation establishments, including restaurants, bars, theaters, video arcades, dance halls and physical fitness centers.~~

DRAFT

~~5. Printing and publishing houses, including newspaper publishing.~~

~~6. Lodges, private clubs, and fraternal societies.~~

~~7. Churches, synagogues, mosques, governmental offices, libraries, museums, art galleries, mortuaries, police and fire stations, and similar public or private institutions.~~

~~8. Public utility installations relating directly to local distribution of services including switching and transmission stations, but not including warehouses and service yards.~~

~~9. Public off-street parking facilities, whether publicly or privately owned or operated; provided that any such area shall not be used as a sales or storage area for mobile homes, trailers, boats or heavy duty equipment.~~

~~10. Health care facilities, including hospitals and nursing homes.~~

~~11. Hotels and motels.~~

~~12. Recreational vehicle parks and campgrounds subject to the approval process and development standards of City Code Title 6, Chapter 4.~~

~~13. Market Garden, Community Garden, Accessory Garden, including retail sales.~~

~~14. Residential uses, including Residential Rental Unit, provided that any dwellings located on the ground floor shall be located behind commercial uses in a manner that will not interrupt commercial frontage, except as otherwise authorized herein. Residential uses may be allowed on the ground floor on secondary street frontages of corner lots.~~

~~15. Temporary Uses, subject to the Specific Use Standards of Chapter 12 of this Zoning Code.~~

~~C. Permitted Accessory Uses and Structures:~~

~~1. Business offices and storage facilities incident to any of the permitted uses shall be located on the same site with the principal building.~~

~~2. Family day care facility.~~

~~D. Conditional Uses:~~

~~1. Drive-up windows.~~

~~2. Automobile sales.~~

~~3. Residential uses, including Residential Rental Unit, located on the ground floor which are not located behind commercial uses or otherwise authorized herein.~~

~~4. Establishments providing pre-pared food primarily for take-out or delivery.~~

~~5. Gasoline service stations and car washes. These uses shall be subject to detailed review of traffic access and circulation plans.~~

~~6. Group day care facility, small day care facility, or large day care facility.~~

~~7. Schools, commercial schools and educational institutions, with specific consideration given to traffic, parking, safety and nuisance issues, as well as cumulative impacts of and proximity to existing schools, commercial schools and educational institutions in the vicinity.~~

~~8. Light Manufacturing with specific consideration given to traffic and circulation.~~

~~E. Limitations On Uses:~~

~~1. All products made incident to a permitted use which are manufactured, fabricated, processed or treated on the premises shall be sold primarily on the premises.~~

~~2. Operations conducted on the premises shall not constitute a nuisance beyond the property lines by reason of smoke, fumes, odor, steam, gasses, vibration, noise, hazards or other causes.~~

~~F. Lot Requirements:~~

~~1. Non-residential uses - none specified~~

~~2. Residential uses:~~

~~a. Minimum area - five thousand (5,000) square feet; or eight hundred (800) square feet of lot area per dwelling unit, whichever is greater.~~

~~b. Minimum width - fifty feet (50').~~

~~G. Minimum Yard Requirements:~~

~~1. Non-residential uses - none specified.~~

~~2. Residential uses:~~

~~a. Front - twenty feet (20').~~

DRAFT

~~b. Side - five feet (5'); the sum of the two (2) side yards shall be at least fifteen feet (15').~~

~~c. Rear - twenty feet (20'), or a rear yard equal to the height of the structure measured at the rear of the structure, whichever is greater.~~

~~d. Street side yard - thirteen feet (13').~~

~~H. Required Open Space:~~

~~1. Non-residential uses - none specified.~~

~~2. Residential uses - a minimum of seventy-five (75) square feet of functional open space shall be provided per dwelling unit; a minimum of four hundred (400) square feet of functional open space shall be provided for each lot.~~

~~I. Maximum Height Of Structures: sixty-five feet (65').~~

~~J. Signs: Pursuant to the Moscow Sign Code.~~

~~Sec. 3-7. Motor Business Zoning District (MB).~~

~~A. Intent: The MB Zoning District is intended to provide for the location and grouping of compatible uses having similar operation as they involve enterprises which depend primarily on the transient motor vehicle-based trade. By concentrating such uses the City intends to increase public convenience when utilizing such services and, within the regulation, to allow such activities to render the maximum service.~~

~~B. Permitted Principal Uses and Structures:~~

~~1. Retail enterprises dispensing food or commodities including on-premises sales, sales requiring delivery of goods, and drive-up facilities such as shopping centers and malls, grocery stores, gasoline service stations, sales lots for automobiles, mobile homes, trailers, boats and heavy duty equipment, and building and landscape material stores and yards (except concrete or asphalt batch or mixing plants).~~

~~2. Professional, financial, business and medical offices, and any enterprise rendering professional or personal services.~~

~~3. Repair shops.~~

~~4. Eating, drinking, entertainment, dancing and recreation establishments, including restaurants, bars, theaters, video arcades, dance halls and physical fitness center.~~

~~5. Printing and publishing houses, including newspaper publishing.~~

~~6. Lodges, private clubs, and fraternal societies.~~

~~7. Churches, synagogues, mosques, governmental offices, libraries, parks, museums, art galleries, mortuaries, police and fire stations and similar public or private institutions.~~

~~8. Residential uses, including Residential Rental Unit, provided that any dwellings located on the ground floor shall be located behind commercial uses in a manner that will not interrupt commercial frontage, except as otherwise authorized herein. Residential uses may be allowed on the ground floor on secondary street frontages of corner lots.~~

~~9. Public utility installations relating directly to local distribution of services including switching and transmission stations and accessory warehouse and service yards.~~

~~10. Public off-street parking facilities, whether publicly or privately owned or operated.~~

~~11. Hotels and motels.~~

~~12. Kennels, commercial and noncommercial, provided that all run areas shall be paved with one and one-half inches (1 ½") of concrete or other impervious material and completely surrounded by an eight foot (8') solid wall or architectural fence.~~

~~13. Laundries, laundromats and dry cleaning services.~~

~~14. Administrative or research establishments.~~

~~15. Self-service storage facilities.~~

~~16. Recreational vehicle parks and campgrounds subject to the approval process and development standards of City Code Title 6, Chapter 4.~~

~~17. Large Scale Establishments, subject to the Specific Use Standards of Chapter 12 of this Zoning Code.~~

~~18. Market Garden, Community Garden, Accessory Garden, including retail sales.~~

~~19. Light Manufacturing.~~

DRAFT

~~20. Temporary Uses, subject to the Specific Use Standards of Chapter 12 of this Zoning Code.~~

~~C. Permitted Accessory Uses and Structures:~~

~~Business offices and storage facilities incident to any of the permitted uses shall be located on the same site with the principal building.~~

~~D. Conditional Uses:~~

~~1. Family day care facility, group day care facility, small day care facility, or large day care facility.~~

~~2. Warehouses (that are not accessory to a permitted use) and wholesale uses. In evaluating a proposal, the applicant must demonstrate to the Board of Adjustment that anticipated levels of traffic from heavy vehicles and potential noise, dust, and odors are compatible with uses located in the vicinity of the proposal.~~

~~3. Schools, commercial schools and educational institutions, with specific consideration given to traffic, parking, safety and nuisance issues, as well as cumulative impacts of and proximity to existing commercial schools and educational institutions in the vicinity and impact to availability of retail and office space. Applications for educational institutions shall be accompanied by a detailed, written description of plans, including present student enrollment, staff on site, site development and future enrollment growth and any phasing thereof.~~

~~4. Residential uses, including Residential Rental Unit, located on the ground floor which are not located behind commercial uses or otherwise authorized herein.~~

~~E. Special Uses:~~

~~1. Public service and utility facilities not listed as permitted uses in the district, such as fire stations, police stations, courthouses, jails, telephone switching facilities, fairgrounds, cemeteries, national guard armories, fire training facilities, pumping stations, electric substations, and similar public service facilities necessary to the neighborhood or community, including signage and other necessary accessory structures.~~

~~2. Public oriented commercial services such as nursing homes, convalescent and rest homes for the aged, retirement homes, and hospitals.~~

~~F. Limitations On Uses:~~

~~1. Pump islands of gasoline service stations shall not be closer than fifteen feet (15') to any street, property line, or public way.~~

~~2. All uses shall be conducted wholly and entirely within enclosed buildings except:~~

~~a. Sales display areas for automobiles, mobile homes, trailers, boats and heavy duty equipment.~~

~~b. Gasoline service stations.~~

~~c. Building materials yards.~~

~~d. Kennels.~~

~~e. Outdoor advertising structures.~~

~~f. Parking and loading areas.~~

~~g. Public utility installations.~~

~~h. Drive-in theaters, miniature golf courses, commercial amusement parks and similar uses.~~

~~i. Movable displays incidental to the major usage, except that such displays shall be confined to privately owned property.~~

~~j. Car washes.~~

~~k. Outdoor dining areas for restaurants.~~

~~l. Market Garden, Community Garden, Accessory Garden, including retail sales.~~

~~m. Landscape Supply Yards.~~

~~n. Temporary Uses, as permitted by this Code.~~

~~3. Accessory buildings and uses customarily incident to any of the permitted uses shall be located on the same site with the principal buildings.~~

~~G. Minimum Lot Requirements:~~

~~1. Non-residential uses - none specified.~~

~~2. Residential uses.~~

~~a. Area - five thousand (5,000) square feet; eight hundred (800) square feet of lot area per dwelling unit.~~

DRAFT

~~b. Width - fifty feet (50').~~

~~H. Minimum Yard Requirements:~~

~~1. Front - ten feet (10').~~

~~2. Side Street - ten feet (10').~~

~~I. Required Open Space: A minimum of seventy-five (75) square feet of functional open space shall be provided per dwelling unit; a minimum of four hundred (400) square feet of functional open space shall be provided for each lot.~~

~~J. Maximum Height of Structures: None specified.~~

~~K. Signs: Pursuant to the Moscow Sign Code.~~

~~Sec. 3-8. Industrial Zoning District (I).~~

~~A. Intent: The I Zoning District is designed to encourage sound industrial development in the City by providing a protective environment primarily for such development.~~

~~B. Permitted Principal Uses and Structures:~~

~~1. Any manufacturing, processing, assembling, research, wholesale or storage use, excepting those uses listed as conditional or special uses in City Code Section 4-3-8(D) or City Code Section 4-3-8(E).~~

~~2. Railroad yard and freight stations, trucking and motor freight stations and facilities.~~

~~3. Public and public utility service buildings, structures and uses.~~

~~4. Automobile, truck, and heavy equipment service stations and garages.~~

~~5. Gasoline service stations.~~

~~6. Building and landscape material stores and yards.~~

~~7. Public off-street parking facilities, whether publicly or privately owned or operated.~~

~~8. Large Retail Establishment, subject to the Specific Use Standards of Chapter 12 of this Zoning Code.~~

~~9. Market Garden, Community Garden, Accessory Garden, including retail sales.~~

~~10. Temporary Uses, subject to the Specific Use Standards of Chapter 12 of this Zoning Code.~~

~~C. Permitted Accessory Uses and Structures:~~

~~1. Business offices incident to any of the permitted uses.~~

~~2. One (1) dwelling unit per lot where accessory to a permitted principal use.~~

~~D. Conditional Uses:~~

~~1. Retail establishment, office, or service uses.~~

~~2. Family day care facility, group day care facility, small day care facility, or large day care facility, provided the facility provides day care services only to children of persons employed at the site.~~

~~3. Commercial schools related to or supportive of industrial uses, with specific consideration given to cumulative impacts of and proximity to existing commercial schools in the vicinity.~~

~~E. Special Uses:~~

~~1. Junk yards, auto wrecking, salvage, and scrap yards, provided all storage and salvage operations are screened from public view.~~

~~2. Concrete or asphalt batch or mixing plants.~~

~~3. Chemical plants.~~

~~4. Meat packing plants.~~

~~5. Heavy manufacturing.~~

~~F. Limitations On Uses:~~

~~1. Pump islands of gasoline service stations shall not be closer than fifteen feet (15') to any street property line or public way, nor shall any gasoline service station signs extend over the property boundary line, street property line or public way.~~

~~2. Accessory buildings and uses customarily incident to any of the permitted uses shall be located on the same site with the principal building.~~

~~G. Minimum Lot Requirements: None specified.~~

~~H. Minimum Yard Requirements:~~

~~1. Front yard - ten feet (10').~~

DRAFT

2. Side - none specified.
3. Rear - none specified.

I. Required Open Space: None specified.

J. Maximum Height of Structures: None specified.

Signs: Pursuant to the Moscow Sign Code.

Sec. 3-9. Urban Mixed Commercial Zoning District (UMC).

A. Intent: The principal purpose of the UMC Zoning District is to provide a location for urban mixed development including a range of compatible commercial uses such as retail, eating and drinking, and hospitality establishments, professional and personal service uses, as well as residential uses. The UMC Zoning District is intended to promote the urban development form, promote a mixture of commercial and residential land uses. This Zoning District is appropriately applied in close proximity to the Central Business District and the downtown area where the urban form of development is appropriate and intensity of allowed commercial land uses can be accommodated.

B. Permitted Principal Uses and Structures:

1. Retail establishments excluding firms selling bulky items, such as building materials, mobile homes, trailers, boats and heavy equipment and large retail establishments.
2. Professional, financial, business and medical offices, administrative, and any enterprise rendering professional or personal services.
3. Research and development establishments including limited associated light manufacturing that is conducted entirely within an enclosed building and which does not constitute a nuisance to adjacent properties.
4. Vertically mixed-use develop-ment, where residential uses are located above or behind ground floor commercial uses.
5. Eating and drinking establishments including wineries, breweries, bakeries and other food product production with on-site retail sales.
6. Entertainment, dancing and recreation establishments, including restaurants, bars, theaters, video arcades, art studios, dance halls and physical fitness centers.
7. Hotels and motels.
8. Public parks, plazas and similar public community and recreation facilities.
9. Printing and publishing houses, including newspaper publishing.
10. Governmental offices, libraries, museums, art galleries, police and fire stations, and similar public or private institutions.
11. Family day care facility, group day care facility, small day care facility.
12. Public utility installations relating directly to local distribution of services, including switching and transmission stations, but not including warehouses and service yards.
13. Publicly and privately owned and operated off-street parking facilities; however, any such area shall not be used as a sales or storage area for mobile homes, trailers, boats or heavy-duty equipment.
14. Market Garden, Community Garden, Accessory Garden, including retail sales.
15. Temporary Uses, subject to the Specific Use Standards of Chapter 12 of this Zoning Code.

C. Permitted Accessory Uses and Structures:

None.

D. Conditional Uses:

1. Churches, synagogues, mosques, lodges, private clubs, and fraternal societies.
2. Drive-up windows.
3. Light manufacturing.
4. Large day care facility.
5. Commercial schools and educational institutions, with specific consideration given to traffic, parking, safety and nuisance issues, as well as cumulative impacts of and proximity to existing commercial schools and educational institutions in the vicinity and impact on availability of retail and office space, especially at street level. Applications for educational institutions shall be accompanied by a detailed,

DRAFT

~~written description of plans, including present student enrollment, staff on site, site development and future enrollment growth and any phasing thereof.~~

~~6. Residential uses located on the ground floor which are not located behind commercial uses.~~

~~7. Structures over sixty-five feet (65') in height.~~

~~E. Limitations On Uses:~~

~~1. Required Off-Street Parking:~~

~~a. Minimum Required.~~

~~**Use of Building or Site**~~	~~**Minimum Number of Parking Spaces Required**~~
~~Residential Uses~~	~~Fifty percent (50%) of the minimum parking required by this Code~~
~~Hotel~~	~~One (1) stall per room~~
~~Convention / Meeting Space~~	~~One (1) per ten (10) fixed seats and one (1) per each one hundred (100) sq. ft. of assembly space without fixed seating~~
~~Office, Retail, and Other Uses~~	~~No minimum parking specified~~

~~b. Maximum Allowed Off-Street Parking. The maximum allowed off-street surface parking shall be limited to no more than one hundred percent (100%) of the minimum parking required as specified within the minimum required parking table of Section 4-6-5(E)(5) of this Code. Parking within parking structures or placed under structures shall not be counted toward the maximum allowed off-street parking limitation.~~

~~2. Off-street parking facilities associated with a principal structure on a lot shall be located behind or to the side of the principal structure that it serves. Off-street parking shall not be located between principal structures and the adjacent principal public street or pedestrian walkways.~~

~~3. Operations conducted on the premises shall not constitute a nuisance beyond the property lines by reason of smoke, fumes, odor, steam, gasses, vibration, noise, hazards, or other causes.~~

~~F. Minimum Lot Requirements: None specified.~~

~~G. Yards:~~

~~1. Minimum Yard Requirements: None specified.~~

~~2. Maximum Yard Limitation: five feet (5') from property lines adjacent public streets or public walkways, except for building recess features designed to provide expanded outdoor seating areas, or building entrance features which may be allowed to be set back a maximum of fifteen feet (15').~~

~~H. Required Open Space: None specified.~~

~~I. Maximum Height of Structures: sixty-five feet (65'), except as otherwise allowed by this Code.~~

~~J. Signs: Pursuant to the Moscow Sign Code.~~

DRAFT

SECTION 4: That Moscow City Code Title 4, Chapter 4 be amended as follows:

Sec. 4-1. Introduction.

This section establishes parcel and building standards for developments within all zoning districts. The standards vary depending upon the zone in which the development is located within as well as the building type. All residential and non-residential development must comply with the standards contained within the Bulk and Placement Regulations Table below. General exceptions to parcel and building standards as well as standards of how to measure setback requirements can also be found within this section.

Sec. 4-2. Bulk and Replacement Regulations Table.

DRAFT

BULK & PLACEMENT REGULATIONS TABLE

	AF	FR	SR	R-1	R-2	R-3	R-4	RO	NB	RTO	CB	GB	MB	I	UMC	U
Minimum Lot Requirements																
Minimum lot area *(expressed in square feet unless otherwise noted, no minimum lot area for non-residential uses)*																
Single family detached	40 acres [13]	3 acres	1 acre	9,600	7,000	6,000	5,000 [1]	5,000 [1]	5,000 [1]	-				-		
Twinhome	-	-	-	-	-	3,250	2,250	2,250	2,250	-				-		
Townhouse	-	-	-	-	-	2,000 [2]	1,800	1,800	1,800	-				-		
Two family dwelling	-	-	-	-	-	7,000	5,000 [1]	5,000 [1]	5,000 [1]	-				-		
Multiple family dwelling	-	-	-	-	-	-	5,000 [1]	5,000 [1]	5,000 [1]	-				-		
Minimum lot width *(in feet, no minimum lot width for non-residential uses)*																
Single family detached	150	125	100	80 [3]	60 [3]	60 [3]	50	50	50	-				-		
Twinhome	-	-	-	-	-	30	25	25	25	-				-		
Townhouse	-	-	-	-	-	20	18	18	18	-				-		
Two family dwelling	-	-	-	-	-	60 [3]	50	50	50	-				-		
Multiple family dwelling	-	-	-	-	-	-	50	50	50	-				-		
Minimum Setbacks [9] *(in feet)*																
Front [10]	30	25	25	25	20	15	15	10	20	25			10	10		
Rear	35	30	30	20	20	20	20	20	20	20 [4]						
Side Yard Minimum	35	20	20	5	5	5	5 [5/6]	5 [5/6]	10	20 [4]						
Side Yard Combined Minimum				15	15 [5]	15 [5]	15 [5/6]	15 [5/6]								
Street Side	20	17	17	17	15	13	13	10	10	20			10			
Exceptions to Minimum Setbacks Listed Above																
Twinhome and Townhouse Exterior Side Setback	-	-	-	-	-	8	8	8	8	-						
Garage Door Front Setback (when door faces said street)	20	40	40	25	20	20	20	20	20	25						
Garage Door Street-Side Setback (when door faces said street)	20	20	20	20	20	20	20	20	20	20						
Accessory Structure Side & Rear Setback *(detached, 200 sq ft or less)* [11]	0	0	0	0	0	0	0	0	0	0						
Accessory Structure Rear Setback *(detached, greater than 200 sq ft)* [12]	5	5	5	5	5	5	5	5	5	5						
Common Open Space *(minimum 400 square feet per lot or as required below, whichever is greater, residential uses only)*																
							75/du	75/du	75/du			75/du	75/du			
	AF	FR	SR	R-1	R-2	R-3	R-4	RO	NB	RTO	CB	GB	MB	I	UMC	U
Maximum Building Height [8] *(in feet)*																
Principal Structure	35	35	35	35	35	35	40	40	40	65	65	65			65	
Accessory Structure *(detached, GREATER than 200 sq ft, and encroaching into required rear yard setback for the parcel)*																
Building Height	35	35	35	35	35	35	40	40	40	65	65	65				
Wall Height [7]	14	14	14	14	14	14	14	14	14	14	-	-				
Accessory Structure *(detached, 200 sq ft OR LESS, and encroaching into principal structure side or rear yard setbacks)*																
Building Height	12	12	12	12	12	12	12	12	12	12	-	-				

Notes

where space is blank there is no minimum/maximum requirement, " - " = not applicable, use not permitted in that zone

du = dwelling unit

[1] Or 800 square feet per dwelling, whichever is greater

[2] Average net density of a townhouse development shall not be more than fourteen and one-half (14.5) units per acre

[3] Minimum lot width for lots that have rear alley access is reduced by 10 feet

[4] Or equal to the height of the building, whichever is greater, when adjacent to R-1, R-2, R-3, or R-4 Zones

[5] Side yard combined minimum of 15 feet only applies to lots 55 feet or more in width

[6] Minimum side yard setback for multiple family developments on lots greater than 20,000 square feet shall be no less than 10 feet

[7] Dormers may be allowed to exceed 14 feet provided they do not occupy more than fifty percent (50%) of the length of the wall, each wall measured separately

[8] Building height is defined in Section 4-1-6 of this Code. For exceptions to maximum building height regulations refer to Section 4-3-3 and Section 4-5-3 of this Code.

[9] Minimum setbacks as specified on this table are for building walls. For permitted projections into minimum setback areas, refer to Section 4-5-4(C) of this Code

[10] Where established front setbacks are less than the minimum required for such Zone, refer to Section 4-5-4(E) of this Code for an alternate front setback requirement

[11] Roof drainage must be contained on-site

[12] The accessory structure shall not occupy more than fifty percent (50%) of the area of the required rear yard for the parcel

[13] Exception to minimum forty (40) acre lot size: No more than one (1) parcel of land less than forty (40) acres may be divided from an existing parcel of forty (40) acres or more in the AF zoning district (a 1/4-1/4 section or full Government Lot shall be treated as a forty (40) acre parcel for the purposes of this Zoning Code). The small parcel shall be at least one (1) acre in area and must be registered with the Office of the Latah County Clerk and the City Community Development Department. Such exceptions must be reviewed and approved by the Council and the Board of Latah County Commissioners.

Sec. 4-3. Exceptions to Height Regulations.

The height limitations contained in the district regulations do not apply to spires, belfries, cupolas, antennas, water tanks, ventilators, chimneys, solar panels, or other appurtenances usually required to be placed above the roof level and not intended for human occupancy.

Sec. 4-4. Setbacks.

A. Definition. A setback is the distance that buildings or uses must be removed from their property lines. Every lot typically has front, rear, and side setbacks that are determined by the underlying zoning district and the building type upon the lot.

B. Setbacks Measurement. Setbacks are measured from the property line unless otherwise indicated. When measuring front and street side yard setbacks for lots that abut a Local Residential Street, as designated upon the Thoroughfare Plan within the City's Comprehensive Plan, the front and street side setbacks shall be measured from the building lot side of the public sidewalk to the nearest point of the wall of the main building on the lot, as shown in Figure 1 below. In such cases where sidewalks do not exist in front or street side of a building lot, the Zoning Administrator shall determine the point of measurement based upon the location of adjacent principal structures, the likelihood of future sidewalk installation, and the anticipated location of such future sidewalk.

C. Permitted Projections into Required Setbacks. Architectural features that do not provide indoor floor space, including eaves, bay windows, decks, carports, and unwalled porches, may project up to twenty-four inches (24") into required side yards and up to forty-eight inches (48") into required front, street side and rear yards.

D. Exceptions to Required Setbacks: Structures of thirty inches (30") or less in height from grade to the top of the structure are exempt from setback requirements. Deck railings are not to be included when measuring the height of structures for the purposes of this setback exemption so long as they do not exceed forty-two inches (42") in height and where the rails and material constitute not more than seventy percent (70%) of the railing area.

E. Alternate Front Setback Requirement. In any zoning district where established front yards are less than the minimum required front yard for such district, the Zoning Administrator may grant modifications to the front yard setback of new principal buildings on the subject property provided:

1. The minimum front yard setback is at least equal to the average setback of the principal buildings located on the lots abutting said subject property; or

2. Sixty percent (60%) or more of the principal buildings, within a numbered block on the same side of the street as the subject property, are set back less than the required zoning front yard setback; the average setback of the existing nonconforming structures may be used to establish the minimum front yard of all properties fronting on that side of the street.

F. Setbacks for Flag Lots. The setback requirements for flag lots are determined by the underlying zoning district the lot is within. The front setback requirement shall be measured by drawing a radius of the front setback distance from the center of the flagpole portion of the lot where it enters the main portion of the lot as shown in Figure 2 below.

(Ord. 98-14, 4/20/98; 2010-24, 11/15/2010; 2014-18, 10/20/2014)

DRAFT

FIGURE 1

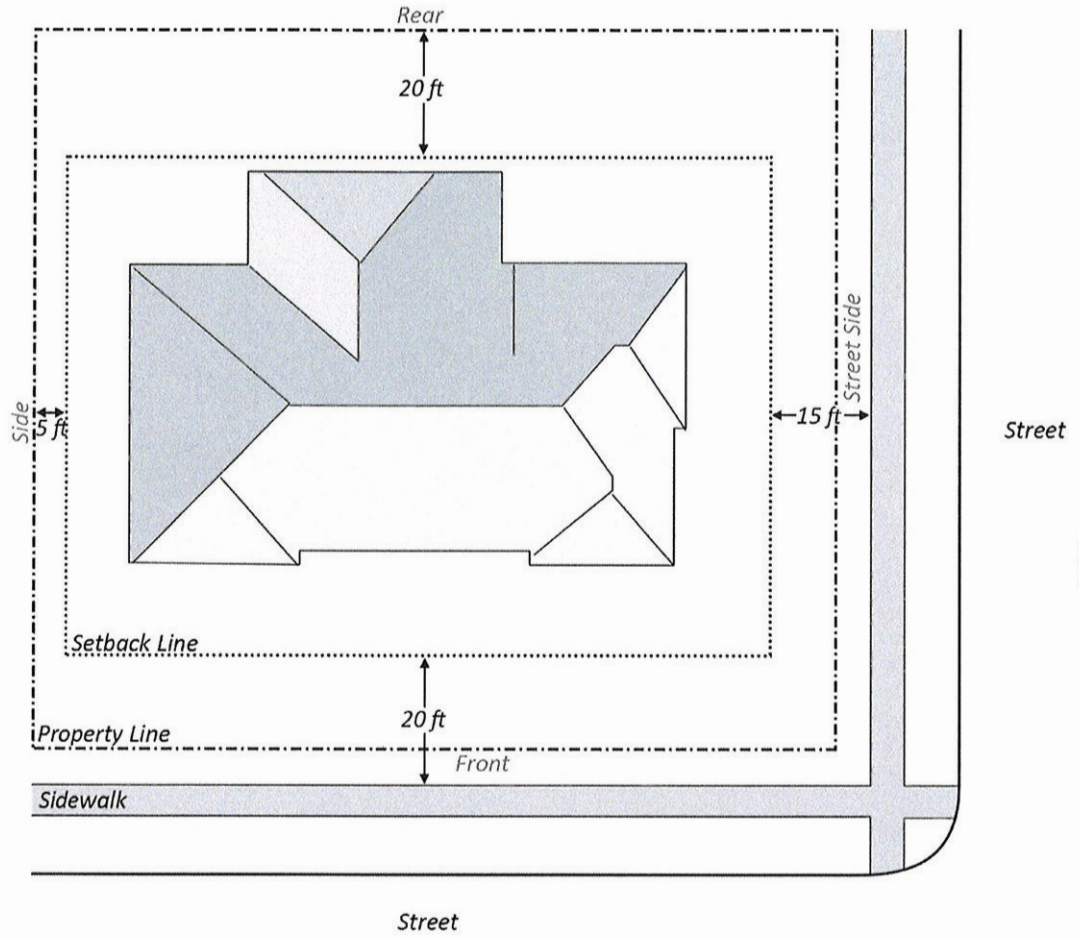

FIGURE 2

DRAFT

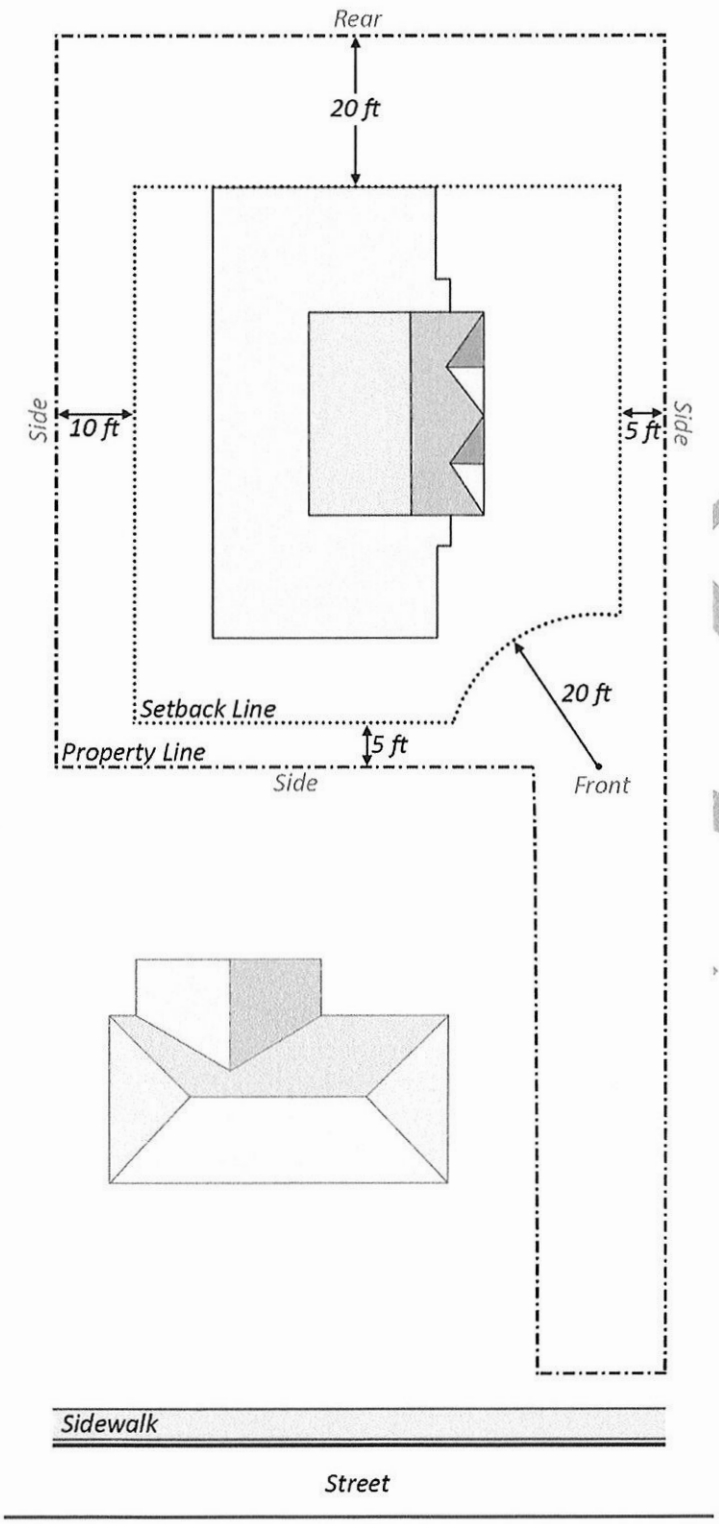
Rear
20 ft
Side
10 ft
5 ft
Side
Setback Line
20 ft
Property Line
5 ft
Side
Front
Sidewalk
Street

DRAFT

Sec. 4-5. Access to Lots and Buildings.

Except as provided below, every lot shall abut a public street right-of-way (other than an alley) for a minimum distance of forty feet (40').

1. Lots on cul-de-sacs and vehicle turnarounds shall abut a public street right-of-way for a minimum distance of twenty feet (20').
2. Approved flag lots shall abut a public street right-of-way for a minimum distance of twenty feet (20'), and the flagpole portion of flag lots shall not exceed one hundred fifty feet (150') in length and shall not be less than twenty feet (20') in width at any point.
3. Approved twinhome lots shall abut a public street right-of-way for a minimum distance of twenty feet (20'). Approved townhouse lots shall abut a public street right-of-way for a minimum distance equal to the minimum lot width of the applicable Zoning District.
4. Legal lots of record that have been approved by the City Council prior to the adoption of this Zoning Code and which do not abut a public street right-of-way shall be excepted from this requirement where sufficient permanent legal access is available (via public right-of-way, private access easement, or other legal means) to provide safe and convenient access for servicing, fire protection, and required off-street parking.

(Ord. 98-14, 4/20/98; 2010-24, 11/15/2010; 2014-18, 10/20/2014)

~~**Sec. 4-7. Curb Cuts.**~~

~~The cut in a curb line for the passage of vehicles shall require the approval of the City Engineer and be subject to the following standards:~~

~~A. Curb cuts shall be located at least thirty feet (30') from the intersection of the curb line with the curb line of an intersecting street.~~

~~B. The width of a curb cut providing access to residential uses shall be a maximum of twenty feet (20'). Curb cuts providing two-way access to commercial uses shall be a maximum of thirty feet (30') in width unless a wider width is deemed appropriate by the City Engineer.~~

~~C. Curb cuts shall be limited to one (1) per street frontage for each lot, with the following exceptions:~~

~~1. Two (2) twenty foot (20') curb cuts may be permitted to commercial uses where ingress only will be permitted through one curb cut and egress only will be permitted through the other curb cut.~~

~~2. Additional curb cuts may be authorized by the City Engineer where, in his opinion, an exceptionally long street frontage or traffic conditions in the area justify such curb cuts.~~

~~D. Approaches to lots from streets where curbs have not been established shall be constructed in a manner such that widths of approaches are consistent with the above standards for curb cuts.~~

~~**Sec. 4-1. University Zoning District (U).**~~

~~A. Intent: The purpose of the U zoning district is to create a zoning district that will protect and maintain the university environment, and provide for the location and grouping of compatible uses found at a university, college or institute of higher learning. The unique activities and wide range of uses found on a university, college or institute of higher learning campus require a special, designated zoning district for this unique set of land uses. Land in the University zoning district must be owned by the University of Idaho (hereinafter "University"). Also provided in this Chapter is a provision for notice to the City for those new or expanded uses in this zoning district where there is a major impact on the water resources, the air quality, the visual environment, the public utilities, the streets or arterials, the surrounding land uses and~~

DRAFT

~~parking in and surrounding the University zoning district. The intent of the notice is to provide sufficient time for the City to identify potential problems resulting from the proposed new or expanded uses, and to be able to work in conjunction with the University toward the alleviation of these problems.~~

~~B. Permitted Uses: In the University zoning district, the following types of uses are permitted as hereinafter provided and allowed by this Chapter and are subject to the general provisions and exceptions set forth in this Zoning Code:~~

~~1. Schools, commercial schools and educational institutions.~~

~~2. Dormitories, fraternity and sorority houses on University owned land, and apartment and other residences that are owned by the University.~~

~~3. Bookstores, student unions, theaters, recreation facilities for participatory and spectator recreation, both indoor and outdoor, that are the normal part of the University and are subject to the rules and regulations of the University administration. Commercial activities shall be prohibited from locating in this zoning district except those directly related to the University, the University's technology transfer mission, or the operation of Student Union Buildings; commercial uses incident to public events such as athletic events, performances and the like, occurring on or in University facilities; commercial uses incident to operation of the University golf course; and commercial events, such as trade shows, fairs or exhibitions, of one week or less duration.~~

~~4. College University administration offices, teaching facilities, research facilities, technology transfer facilities, libraries, farm and farm buildings, that are a part of the University and subject to the rules and regulations of the University administration.~~

~~5. Warehouses, maintenance buildings, utility structures, and other similar facilities that are the normal part of the University and are subject to the rules and regulations of the University and the University administration.~~

~~6. Recreational vehicle parks and campgrounds subject to the approval process and development standards of Code Title 6, Chapter 4.~~

~~C. Notification of New or Expanded Uses: The University will notify the City, in a timely fashion, of any proposed new or expanded use to be established in the University zoning district having a major impact upon the water resources, air quality, visual environment, the public utilities including sewage facilities, the surrounding land uses, streets and arterials and parking facilities.~~

~~D. Bulk and Dimensional Regulations:~~

~~1. Minimum lot area - none specified.~~

~~2. Minimum lot width - none specified.~~

~~3. Building height - none specified.~~

~~4. Minimum setback requirements - none specified except rear yards where abutting a Residential zoning district shall be twenty (20) feet in depth, measured from rear property line to rear of structure.~~

~~E. Use After Sale: University land sold or leased for non-University uses must be rezoned before a new use can be established.~~

~~F. Recreational Vehicle Parks: In evaluating a proposal, the applicant must demonstrate to the Planning and Zoning Commission that the recreational vehicle park will not generate traffic volumes that would be a nuisance to the neighborhood in which it is located.~~

~~G. Signs: Pursuant to the Moscow Sign Code.~~

~~(Ords. 97-33, 11/3/97; 2005-33, 12/19/2005)~~

DRAFT

~~**Sec. 4-2. Legacy Crossing Overlay (LCO) Zoning District.**~~

~~A. Intents and Purposes. With the retraction of historic agricultural industrial uses from the downtown area and in special consideration of its unique and sensitive characteristics, the City finds that redevelopment within the LCO area requires an increased level of review to ensure the logical and orderly redevelopment and provision of public services within the LCO area.~~

~~B. Relationship to Underlying Zoning. It is the intent of the LCO that the underlying zoning district designation shall specify the permitted land uses within the LCO and the LCO review process shall be contained to the review of design of proposed development within the LCO.~~

~~C. Development Review. Prior to the issuance of any building permit for a new principal structure, or for a substantial improvement (as defined by this Code) to any existing principal structure, all development proposals within the LCO shall be reviewed for conformance with the LCO Design Guidelines, as duly adopted by Resolution of the Council, in accordance with the provisions of this Section.~~

~~D. Development Review Process. Review of a proposed LCO development shall consist of three (3) stages: a Pre-application Meeting; a Preliminary LCO Development Review; and a Final LCO Development Review.~~

~~1. Pre-application Meeting. The pre-application meeting is intended to provide the opportunity to identify and discuss the conformance of the proposed development concept with the underlying zoning designation and the intents, purposes and requirements of the LCO Design Guidelines, and to provide an informal review opportunity of a proposed development prior to substantial design investment by the applicant.~~

~~a. Required Pre-application Meeting Materials. The applicant shall provide concept plans which show the proposed development, including a concept site plan, building elevations, and the number, floor area, and proposed use of all proposed structures and land areas of the development site. Such plans shall be of adequate scale, resolution and detail to provide the Zoning Administrator with adequate information to assess the conformance of proposed development to the LCO Design Guidelines.~~

~~b. Upon completion of the Pre-application Meeting, the Zoning Administrator shall provide the applicant with comments and suggestions for any recommended amendments and/or modifications to the development concept for use in further development of the application.~~

~~2. Preliminary Development Review.~~

~~a. Preliminary LCO Development Application Materials. Prior to review by the Planning and Zoning Commission, the applicant shall submit five (5) copies the following development application materials to the Zoning Administrator:~~

~~i. A development site plan that includes all the following:~~

~~(a) Property boundary lines and individual lot lines of each parcel which is to be created for separate ownership;~~

~~(b) Existing and proposed grade plan in two foot (2') maximum contour intervals of the development site and extending a minimum of twenty feet (20') outside the development site;~~

~~(c) The location of all buildings and all off-street parking areas;~~

~~(d) The location of all planned and existing thoroughfares and walks, their widths and nature of their improvements, and whether they are to be public or private;~~

DRAFT

~~(e) The location of easements for water lines, fire hydrants, sewer and storm sewer lines, and other utilities;~~

~~(f) Areas to be conveyed, dedicated, reserved or used for parks, playgrounds or any other public use;~~

~~(g) Landscaping and tree planting plans including the location of existing trees and shrubs which are to be retained;~~

~~(h) Any other details deemed necessary during the Pre-application Meeting to demonstrate conformance with the LCO Design Guidelines.~~

~~ii. Elevation drawings of all proposed structures including a description of proposed building materials and all proposed land uses including a computation of total square footages dedicated to the proposed uses; and~~

~~iii. Lighting and signage plans.~~

~~b. All submitted plans shall be drawn to a standard engineer's or architect's scale and may contain multiple categories of the above-listed information on any one (1) plan drawing, provided that such plan drawing represents all information in an accurate and readily identifiable manner. Plans shall contain information and detail as necessary to determine compliance with applicable codes, and to determine conformance with the LCO Design Guidelines and intent of this Section.~~

~~c. Determination of Completeness. Upon receipt of the Preliminary Review submission from Applicant, the Zoning Administrator shall distribute the proposed development plans to the appropriate development review parties for review and comment upon the proposed development plans. Upon determination that the application materials are complete and in substantial conformance with applicable City standards and requirements, the Zoning Administrator shall schedule the Preliminary LCO Development Application for review by the Planning and Zoning Commission.~~

~~d. Preliminary Review Public Comment Period. Prior to the Preliminary Review by the Commission, notice of the proposed development shall be published in the paper of record and posted upon the subject property. Such notice shall describe the nature of the proposed development, the location where materials relating to the proposed development may be viewed, and provide fifteen (15) calendar days from the date of publication and posting for written comments regarding the proposed development to be submitted to the Zoning Administrator. All written comments received by the Zoning Administrator shall be included with the preliminary review materials for the Commission's consideration.~~

~~e. Preliminary Development Review Process. The Preliminary Review shall be conducted by the Commission as a regular agenda item. The Commission shall evaluate the conformance of the proposed development with the LCO Design Guidelines and may give approval of the proposed development, or approval subject to required modifications or conditions, or may deny the development proposal. All decisions of the Commission shall be based upon the criteria established within the LCO Design Guidelines. If the proposed development will include Conditionally Permitted Uses or require a Variance, the Commission shall serve as the hearing body for the proposed Conditional Use or Variance in conjunction with the Preliminary Review.~~

~~f. Appeal of the Preliminary Decision. The decision of the Commission relative to a proposed LCO development may be appealed to the Council by the applicant or by any affected person, as defined by this Code, in accordance with this Code.~~

DRAFT

~~g. Duration of Preliminary Approval. Preliminary approval of a LCO development proposal shall expire eighteen (18) months following the date of approval by the Commission and shall be automatically null and void on such date unless final approval has been granted prior to such time.~~

~~3. Final Review. The final review process is intended to provide an opportunity to review the final development plans for conformance with the intent of the Preliminary Development Review approval.~~

~~a. Final LCO Development Application Review Materials. The applicant shall provide five (5) copies of the proposed final LCO development plans to the Zoning Administrator not less than twenty one (21) days in advance of the meeting of the Commission at which the proposed final development plans shall be reviewed. The final LCO development plan submission shall include final version of all materials required for the Preliminary development review, in addition to the following items:~~

~~i. Evidence of clear title to any lands to be conveyed or reserved for parks, scenic ways, playgrounds, schools, public buildings, or other public purposes;~~

~~ii. Final plans for location of water, sewer, drainage and all other utilities, and plans for street improvements and grading;~~

~~iii. A final phasing plan; and~~

~~iv. Any proposed development agreements, deed restrictions, or other commitments necessary to assure compliance with the proposed final LCO development plan.~~

~~b. Final LCO Development Review Process. If the proposed final LCO development plan is substantially similar to the LCO development plan application submitted to the Commission for preliminary approval and, if it adequately incorporates all required conditions or modifications, it may be considered as a regular agenda item at a meeting of the Commission. The Commission may grant final approval, may grant final approval with minor modifications or conditions, or may deny the application if it is not in substantial conformance with the preliminary approval and/or conditions of preliminary review approval. Phased building permits and construction shall be allowed in accordance to phasing plans presented and approved within the original approval.~~

~~c. Appeal of the Final Decision. The decision of the Commission relative to a proposed LCO development final approval may be appealed to the Council by the applicant or by any affected person, as defined by this Code, in accordance with this Code.~~

~~d. Duration of Final LCO Development Approval. If building permits required for the approved LCO development are not obtained within twenty four (24) months following the date of final approval by the Commission, such LCO development final approval shall be immediately revoked and shall be automatically null and void on such date. Within twenty four (24) months following the date of LCO development final approval by the Commission, the applicant of such LCO development may request one (1) extension of not more than twelve (12) months from the date of the request for extension. The request for extension shall be reviewed and approved or denied by the Commission. No further extension shall be granted.~~

~~4. LCO Project Amendment. After final approval of a LCO Development, the Zoning Administrator shall administer the permitting and development review process for the project. The Zoning Administrator shall be allowed to approve minor amendments to the project that do not substantively alter the intent and considerations, or specific conditions of the Commission's project approval. If the Zoning Administrator finds that the proposed amendment substantively alters the intent and considerations, or specific conditions of the~~

DRAFT

~~Commission's approval, the proposed amendment shall be consider by the Commission as a regular agenda item.~~
~~(Ord. 2012-09, 06/04/2012)~~

SECTION 5: That Moscow City Code Title 4, Chapter 6 be amended as follows:

. . .

Sec. 6-5. Off-Street Parking Requirements.

. . .

E. Off-Street Parking Schedule: Parking spaces required for designated uses in all zoning districts, except within Section 4-6-5(E)(4) below, are established as follows:

1. Compact Spaces: An allowance of thirty five percent (35%) of the total number of spaces required may be identified and used as compact car spaces. These spaces shall be conveniently located and provided with adequate signage.

2. Fractional Requirements: Fractional requirements shall require one (1) space.

3. Area Calculation: Except as otherwise indicated, area measurements are given in gross floor area. Restroom facilities and areas used for storage may be excluded from the floor area calculation.

4. Specific Zone Exemptions: The following zoning districts have off-street parking requirements specific to each respective zone and are not required to meet Section 4-6-5(E)(6) below; however, all other provisions of Section 4-6-5 shall apply.

a. Central Business (CB) Zoning District: Off-street parking is not required within the CB Zoning District.

b. Urban Mixed Commercial Zoning District Required Off-Street Parking:

i. Minimum Required.

Use of Building or Site	Minimum Number of Automobile Parking Spaces Required
Residential Uses	50% of the minimum parking required by this Code
Hotels	1 per room
Convention/Meeting Spaces	1 per 10 fixed seats and 1 per each 100 sf of assembly space without fixed seating
Office, Retail, and Other Uses	No minimum parking specified

ii. Maximum Allowed Off-Street Parking. The maximum allowed off-street surface parking shall be limited to no more than one hundred percent (100%) of the minimum parking required as specified within the minimum required parking table of Section 4-6-5(E)(6) of this Code. Parking within parking structures or placed under structures shall not be counted toward the maximum allowed off-street parking limitation.

c. University Zoning District. Off-street parking is not required within the U Zoning District since the University of Idahomanages parking on campus through the Parking and Transportation Services Department.

5. Accessibility: Where off-street parking is required for multi-family residential, commercial, or institutional uses, accessible parking and access shall be provided in accordance with the most recent standards promulgated by the American National Standards

DRAFT

Institute (ANSI) and the most recently adopted building code. The van accessible space detail, standard accessible space detail, accessible sign detail, and the number of accessible spaces required are shown in Figure 2 below. The most recently adopted ANSI and building code requirements shall take precedence over Figure 2 in the circumstance where there are differing standards.

6. Minimum Number of Automobile Parking Spaces Required by use of building or site:

RESIDENTIAL USES	Minimum Number of Automobile Parking Spaces Required[2]
Dwellings in Residential Zones	
Single Family (up to 4 unrelated individuals)	2 per du, plus 1 per bedroom in excess of 4 bedrooms
Two Family	2 per du, plus 1 per bedroom in excess of 4 bedrooms
Twinhome	2 per dwelling unit
Townhouse	2 per dwelling unit
Single Family (up to 6 unrelated individuals)	2 per du, plus 1 per bedroom in excess of 4 bedrooms
Multiple Family (3 or more units)	Studio or one bedroom: 1.25 per du Two bedroom: 1.75 per du Three or more bedroom: 0.75 per bedroom
Mobile Home Parks	2 per mobile home
Group Living	
Boarding House (occupied by owner, up to 6 boarders)	2 per du, plus 1 per bedroom in excess of 4 bedrooms
Dormitories	1 per 2 occupants based upon anticipated max occupancy
Fraternity, Sorority, and Cooperative Houses	1 per 2 occupants based upon anticipated max occupancy
Accessory Uses	
Accessory Dwelling Unit	1 in addition to principal structure requirements
NON-RESIDENTIAL USES	**Minimum Number of Automobile Parking Spaces Required[2]**
Agricultural Uses	
Agriculture, Animal Production	None Required
Agriculture, Crop Production	None Required
Animals and Fowl (as permitted by City Code Title 10)	None Required
Animal Slaughtering and Processing	None Required
Gardens (Market and Community) no on-site retail sales	None Required
With on-site retail sales	None Required
Sawmills	None Required
Amusement and Recreation Facilities	
Archery/Shooting Ranges (indoor only)	1.5 per firing lane
Bowling Centers	6 per lane
Dance Halls	1 per 100 sf
Fitness Centers	1 per 300 sf
Golf Courses and Country Clubs	4 per hole
Miniature Golf Facilities	4 per hole

Movie Theaters	1 per 4 seats
Riding Stables	1 per 3 stalls
Stadiums and Sports Arenas (Ice/Roller Rinks, Gymnasiums, Ballfields)	1 per 8 seats, plus 1 per 100 sf of assembly space without fixed seats[3]
Animal-Related Business	
Veterinary Services	1 per 200 sf
Pet Care Services	1 per 400 sf
Financial, Technology, and Professional Services	
Agencies, Brokerages and Other Insurance Related Activities	1 per 400 sf
Broadcasting Studios	1 per 400 sf
Business, Professional, Political, Social Advocacy, Grantmaking, and Similar Organizations	1 per 400 sf
Commercial Banking, Savings Institutions, and Credit Unions	1 per 400 sf
Construction Contractor Services	1 per 400 sf of office space
Data Processing, Hosting, and Related Services	1 per 400 sf
Professional, Scientific, and Technical Services	1 per 400 sf
Publishing Industries (except Internet)	1 per 400 sf
Real Estate Services	1 per 400 sf
Securities, Commodity Contracts, and Other Financial Investments	1 per 400 sf
Software Publishers	1 per 400 sf
Food and Beverage Service	
Coffee/Espresso Stand	1 per 200 sf
Drinking Places (Alcoholic Beverages)	1 per 200 sf
Restaurants	1 per 200 sf
Manufacturing	
Beverage Manufacturing	1 per 1,000 sf
Manufacturing, Heavy	
Manufacturing, Light	
Aerospace Product and Parts Manufacturing	
Computer and Electronic Product Manufacturing	
Electrical Equipment, Appliance, and Component Manufacturing	
Medical Equipment and Supplies Manufacturing	
Pharmaceutical and Medicine Manufacturing	
Public/Institutional Uses	
Antenna Towers *(new)*	1 stall per site
Co-Location	None Required
Cemeteries	None Required
Child Day Care Services	
Family, 5 or fewer children	2 per child care facility

Group, 6 to 12 children	2 per child care facility plus the loading zone requirements of Section 4-3-4. D.
Small, 13 to 20 children	3 per facility plus the loading zone requirements of Section 4-3-4. D.
Large, 21 or more children	4 per facility plus the loading zone requirements of Section 4-3-4. D.
Civic and Social Organizations	1 per 4 seats or 100 inches of bench seating, plus 1 per 100 square feet of open assembly area
Community/Neighborhood Center	1 per 4 seats or 100 inches of bench seating, plus 1 per 100 square feet of open assembly area
Correctional Institutions	1 per each 6 beds
Educational Services	Kindergarten, Elementary & Middle Schools: 2 spaces per classroom and 1 for every 8 seats in largest assembly area; High Schools: 5 spaces per classroom and 1 for every 8 seats in largest assembly area;
Fairgrounds	1 per 8 seats and 1 per 100 sf of assembly space without fixed seats
Funeral Homes and Funeral Services	1 per 75 sf used for assembly
Government Office Buildings	1 per 400 sf
Health Care Services (Ambulatory)	1 per 200 sf
Hospitals	1 per bed
Museums and Art Galleries	1 per 500 sf
Nursing and Residential Care Facilities	1 per 3 beds
Public Parks & Recreational Facilities (operated by local government)	1 per 8 seats and 1 per 100 sf of assembly space without fixed seats[3]
Public Service and Utility Facilities	None Required
Religious Facilities	1 per 4 seats or 100 inches of bench seating, plus 1 per 100 square feet of open assembly area
Telecommunications Services	1 per 400 sf
Retail and Personal Services	
Consumer Goods Rental	1 per 400 sf
Laundries and Drycleaners	1 per 400 sf
Personal Care Services	1 per 400 sf
Retail Sales (excluding 4411 & 444)	1 per 400 sf; 1 per 800 sf for retail stores handling bulky merchandise (furniture, appliances, etc.)
Large Retail Establishment	
Storage Services	
Self-Storage Facilities	1 per 300 sf of sales or office area
Warehouses/Wholesale Uses	1 per 2,000 sf
Temporary Uses[1]	None Required
Vehicles and Equipment	
Automobile and RV Dealers	1 per 800 sf
Automotive Repair and Maintenance	
Building Material Sales & Garden Equipment/Supplies	
Commercial and Industrial Machinery and Equipment Repair and Maintenance	

Electronic and Precision Equipment Repair and Maintenance	
Gas Stations	
Heavy Equipment Sales (mobile homes, farm equipment)	
Parking Lots and Garages	None Required
Personal and Household Goods Repair and Maintenance	1 per 800 sf
Railroad Yards and General Freight Trucking	1 per 2 employees on maximum work shift, but not less than 1 per 1,000 sf
Rental and Leasing Services	1 per 800 sf
Scrap Yards/Material Recycling[1]	1 per 300 sf of sales or office area
Visitor Accommodations	
Bed and Breakfast	0.5 per bedroom
Hotels and Motels	1 per sleeping room
RV Parks and Campgrounds	1 per each trailer/tent or RV space

NOTES
[1] Or applicant provide parking survey and summary to document peak on-street parking demand for the neighborhood for Zoning Administrator and/or Board of Adjustment determination that adequate parking is available. [2] Exemptions to minimum off-street parking requirements in CB, UMC, and U Zones. See Section 4-6-5(E)(4) [3] Or as determined by the Zoning Administrator, in consideration of operating characteristics of the use

~~*Use of Building or Site*~~	~~*Minimum Number of Parking Spaces Required*~~
~~**Residential:**~~	
~~Single family dwelling~~	~~2 per dwelling unit~~
~~Two family dwelling~~	~~2 per dwelling unit or 1 per bedroom for any two family dwelling containing three or more bedrooms and providing direct vehicular access between the parking and a designated arterial or collector street~~
~~Multi-family dwelling (3 or more units)~~	
~~One bedroom or studio apt.~~	~~1.25 per dwelling unit~~

DRAFT

~~Two bedroom~~	~~1.75 per dwelling unit~~
~~Three or more bedroom~~	~~.75 per bedroom or 1 per bedroom for any multifamily dwelling containing three or more bedrooms and providing direct vehicular access between the parking and a designated arterial or collector street~~
~~Elderly housing project~~	~~1 per 2 dwelling units~~
~~Fraternities & Sororities~~	~~1 per 2 occupants~~
~~**Commercial**~~	
~~Retail uses not otherwise specified and personal services:~~	
~~If less than 5,000 sq. ft.~~	~~1 per 400 sq. ft.~~
~~If 5,000 to 25,000 sq. ft.~~	~~10 plus 1 per 400 sq. ft. in excess of 5,000 sq. ft.~~
~~If over 25,000 sq. ft.~~	~~60 plus 1 per 300 sq. ft. in excess of 25,000 sq. ft.~~
~~Retail stores handling bulky merchandise (furniture, appliances, farm machinery, and plumbing, heating and building supplies) and other services and repair~~	~~1 per 800 sq. ft.~~
~~**Restaurants, bars and lounges**~~	
~~If less than 4,000 sq. ft.~~	~~1 per 200 sq. ft.~~
~~If 4,000 sq. ft. or more~~	~~20 plus 1 per 100 sq. ft. in excess of 4,000 sq. ft.~~

DRAFT

~~Dance Halls~~	~~1 per 100 sq. ft.~~
~~Auto courts, motels and hotels~~	~~1 per unit~~
~~Theaters~~	~~1 per 4 seats~~
~~Bowling Alleys~~	~~6 per lane~~
~~Medical and dental clinics~~	~~1 per 200 sq. ft.~~
~~Banks, business and professional offices with on-site customer services~~	~~1 per 400 sq. ft.~~
~~Offices not providing on-site customer service~~	~~1 per employee or 1 per 800 s. ft., whichever is greater~~
~~Warehouses and storage~~	~~1 per two employees on maximum work shift~~
~~Wholesale establishments~~	~~1 per 2 employees on maximum work shift plus 1 per 500 s. ft. of sales or office area~~
~~Manufacturing, research, assembling, all industries~~	~~1 per 2 employees on maximum testing and processing, work shift, but not less than 1 per each 800 sq. ft.~~
~~Churches, auditoriums and similar enclosed assembly places~~	~~1 per 3 seats or 60 inches of pew, or 40 sq. ft. for assembly~~
~~Mortuaries~~	~~1 per 75 sq. ft. used for assembly~~
~~Stadiums, sports arenas and similar open assembly areas~~	~~1 per 8 seats and 1 for each 100 sq. ft. of assembly space without fixed seats~~
~~Hospitals~~	~~1 per bed~~
~~Nursing homes, convalescent homes, sanitariums, rest homes~~	~~1 per 3 beds~~
~~Libraries~~	~~1 per 500 sq. ft.~~
~~Day care facilities~~	~~1.25 per employee or staff member~~
~~**Schools:**~~	

DRAFT

~~Kindergarten, elementary and junior high~~	~~1 per employee and faculty member~~
~~** High schools~~	~~1 per employee and faculty member, and support staff plus 1 per each 8 students~~
~~** Commercial schools~~	~~1 per employee, faculty member and support staff plus 1 per each 5 students~~
~~** Educational Institutions, except where located in the University (U) Zoning District~~	~~1 per employee, faculty member, and support staff plus 1 per each 5 students~~

** Exempt from having to meet minimum number of off-street parking spaces, if requirement would result in five (5) or fewer such spaces.

7. Bicycle Parking Incentive: The total number of required automobile parking spaces for all uses other than single family and two (2) family dwellings may be reduced by ten percent (10%) if bicycle parking is provided in accordance with the following standards:

a. Required Bicycle Spaces: The total number of bicycle parking spaces must be equal to four (4) times the total number of reduced automobile parking spaces.

b. Approved Bicycle Rack Types. All required bicycle parking support racks shall be of the 'A', inverted 'U' or modified 'U' (or equivalent) style, or a bicycle locker or other storage device which;

i. support[s] the bicycle in an upright position by the bicycle frame in a minimum of two (2) locations;

ii. prevent[s] the wheel of the bicycle from tipping over; and

iii. enable[s] the locking of the frame and one (1) or both wheels.

All bike racks or bike lockers shall be securely anchored in the ground. Nothing within this Section is intended to preclude opportunities for creative and artistic bicycle racks that meet the bicycle support and locking requirements contained herein.

c. Bicycle Rack Location and Lighting. Bicycle racks shall be placed as close to the primary building entrance(s) as possible in a convenient location that is clearly visible and well lit for ease of use and to provide protection against vandalism and theft. Bicycle racks should not be placed so as to block an entrance or inhibit pedestrian flow in or out of a building.

d. Bicycle Rack Sheltering. No less than twenty-five percent (25%) of bicycle racks serving commercial or institutional uses, and no less than fifty percent (50%) of bicycle racks serving multi-family residential uses, shall be placed under building overhangs, awnings, free-standing shelter structures, or similar structures that protect the entire bicycle parking space from precipitation.

e. Bicycle Rack Spacing and Area. The minimum bicycle parking space shall be twenty four inches (24") wide by seventy two inches (72") long. Spacing between bicycle racks shall be no less than forty eight inches (48"). Where multiple rows of bicycle racks are installed, a center access aisle of no less than forty eight inches (48") shall be provided. Bicycle racks

DRAFT

shall be placed no closer than twenty four (24") from any adjacent building wall or other obstruction.

• • •

Sec. 6-13. Moscow Sign Code.

• • •

O. Permitted Signs in the SR, R-1, R-2 and R-3 Zoning Districts.

~~1. A maximum of thirty-two (32) square feet of total sign area per lot identifying a permitted institutional, public service or utility facility use located on the lot. Said signage must be compatible with the neighborhood.~~

~~2. A maximum of four (4) square feet of total sign area per lot identifying a permitted commercial use located on the lot. Said signage must be compatible with the neighborhood.~~

1~~3~~. ~~No more than~~ A maximum of one (1) monument or freestanding sign per lot street frontage.

2. No monument or freestanding sign shall exceed twenty (20) square feet in size, nor ten feet (10') in height identifying a permitted institutional, public service, or utility facility located on the lot.

3. No monument or freestanding sign shall exceed four (4) square feet in size identifying a permitted commercial use located on the lot.

4. Signs may be externally illuminated only; no strobe lights, flashing lights, rotary lights, or beacons shall be permitted, and the source of illumination shall not be visible from any adjoining street or property.

5. The total area of wall signs on a building wall shall not exceed one (1) square foot times the length in feet of the wall; each wall calculated separately.

6~~5~~. No ~~free standing,~~ roof sign or portable sign shall be permitted.

7~~6~~. A projecting or suspended sign shall maintain a minimum clearance of eight feet (8') to the ground below or fourteen feet (14') if over a driveway.

8~~7~~. No projecting signs shall exceed a height of thirty inches (30") above the building wall.

P. Permitted signs in the R-4, RO and NB Zoning Districts.

~~1. A maximum of thirty-two (32) square feet of total sign area per lot, identifying a permitted institutional, public service or utility facility, or commercial use located on the lot. Said signage must be compatible with the neighborhood.~~

1~~2~~. A maximum of one (1) monument or ~~F~~freestanding sign on each lot street frontage.

2~~3~~. No monument or freestanding sign shall exceed thirty two~~twenty~~ (~~20~~32) square feet in size nor ten feet (10') in height.

3. The total area of wall signs on a building wall shall not exceed one (1) square foot times the length in feet of the wall; each wall calculated separately.

4. Signs may be externally illuminated only; no strobe lights, flashing lights, rotary lights, or beacons shall be permitted, and the source of any illumination shall not be visible from any adjoining street or property.

5. No roof sign or portable sign shall be permitted.

6. A projecting or suspended sign shall maintain a minimum clearance of eight feet (8') to the ground below or fourteen feet (14') if over a driveway.

7. No projecting sign shall exceed a height of thirty inches (30") above the building wall.

~~8. No more than one (1) monument sign per lot street frontage.~~

Q. Permitted Signs in the RTO and "U" Zoning Districts.

DRAFT

~~1. A maximum or sixty-four (64) square feet of total sign area per lot identifying a permitted institutional, public service, utility facility, or commercial use located on the lot.~~

1~~2~~. A maximum of one (1) monument or f~~F~~reestanding sign on each lot street frontage.

2~~3~~. No monument or freestanding sign shall exceed ~~thirty-two~~sixty four (64~~32~~) square feet in size nor ten feet (10') in height.

3. The total area of wall signs on a building wall shall not exceed one (1) square foot times the length in feet of the wall; each wall calculated separately.

4. Signs may be externally illuminated only; no strobe lights, flashing lights, rotary lights, or beacons shall be permitted, and the source of illumination shall not be visible from any adjoining street or property.

5. No roof sign or portable sign shall be permitted.

6. A projecting or suspended sign shall maintain a minimum clearance of eight feet (8') to the ground below or fourteen feet (14') if over a driveway.

7. No projecting sign shall exceed a height of thirty inches (30") above the building wall.

R. Permitted Signs in the CB, UMC and GB Zoning Districts.

~~1. A maximum of two hundred fifty (250) square feet of total sign area per lot.~~

1~~2~~. A maximum of either one (1) freestanding sign or one monument sign on each lot street frontage.

2~~3~~. No freestanding sign shall exceed one hundred twenty (120) square feet in size not twenty-five feet (25') in height.

3~~4~~. Any freestanding sign erected over a driveway shall maintain a minimum clearance of fourteen feet (14') to the driveway surface.

4~~5~~. A maximum of one (1) projecting sign and one (1) suspended sign per business, profession, institution, organization or enterprise on each lot street frontage. No projecting sign shall exceed fifty (50) square feet in size, nor shall it exceed a height of thirty inches (30") above the building wall.

5~~6~~. No suspended sign shall exceed twelve (12) square feet in size.

6~~7~~. A projecting or suspended sign shall maintain a minimum clearance of eight feet (8') to the ground below or fourteen feet (14') if over a driveway.

7~~8~~. No projecting sign shall exceed a height of thirty inches (30") above the building wall.

8~~9~~. The total area of wall signs on a building wall shall not exceed three (3) square feet times the length in feet of the wall, each wall calculated separately.

9~~10~~. Signs may be internally or externally illuminated, however, no strobe lights, flashing lights, rotary lights, or beacons shall be permitted and the source of illumination shall not be visible from any adjoining street or property.

10~~11~~. No roof sign shall be permitted.

11~~12~~. Portable Signs as permitted in Section T of this Sign Code.

. . .

SECTION 6: That Moscow City Code Title 4, Chapter 11 be amended as follows:

Sec. 11-1. Zoning Administrator Responsibilities.

A. A Zoning Administrator shall administer and enforce this Zoning Code. The Zoning Administrator is authorized to use any and all lawful means available to fairly administer and

DRAFT

enforce this Zoning Code. The Zoning Administrator may be provided with the assistance of such other persons as is necessary to administer and enforce this Zoning Code.

B. If the Zoning Administrator shall find that any of the provisions of this Zoning Code are being violated, the Zoning Administrator or designee shall notify in writing the person responsible for such violations, indicating the nature of the violation and ordering the action necessary to correct it. The Zoning Administrator or designee shall order discontinuance of illegal use of land, buildings, or structures; removal of illegal additions, alterations, or structural changes; discontinuance of illegal work being done; or shall take other action authorized by this Zoning Code to insure compliance with or to prevent violation of its provisions.

Sec. 11-2. Zoning Certificates.

A. Zoning Certificates Required:

1. It shall be unlawful to use or occupy or permit the use or occupancy of any building or premises, or both, or part thereof hereafter located, erected, constructed, reconstructed, enlarged, or changed in its use or structure until a zoning certificate has been issued therefor by the Zoning Administrator stating that the proposed use of the building or land conforms to the requirements of this Zoning Code.

2. A temporary Zoning Certificate may be issued by the Zoning Administrator for a period not to exceed one (1) year during alterations or partial occupancy of a building pending its completion, provided that such temporary certificate may include such conditions and safeguards as will protect the safety of the occupants and the public.

B. Expiration of Zoning Certificates:

1. If the work described in any zoning certificate has not begun within one (1) year from the date of issuance thereof, said permit shall automatically expire.

2. If the work described in any zoning certificate requires a building permit, and the building permit expires, then the zoning certificate shall automatically expire. If the work described in any zoning certificate that does not require a building permit has not been substantially completed within two (2) years of the date of issuance thereof, said certificate shall automatically expire. Six (6) month extensions may be granted by the Board of Adjustment at its discretion.

Sec. 11-3. Interpretation.

A. It is not the intention of this Zoning Code to interfere with any more strict requirements which may be imposed by a covenant, deed restriction, city, county, state or federal health officer, that has jurisdiction in the City.

B. Where this Zoning Code imposes a greater restriction upon the use of buildings, the provisions of this Zoning Code shall govern.

C. None of the provisions of this Zoning Code is intended to provide the basis for a claim or create a cause of action against the City, or its officials or employees, for the performance or failure to perform any duty or obligation running to a specific individual. Any duty or obligation created by this Zoning Code is intended to be a general duty or obligation running in favor of the general public.

D. It is the intent of this Zoning Code that all questions of interpretation and enforcement shall first be presented to the Zoning Administrator, and that such questions shall be presented to the Board of Adjustment only on appeal from the decision of the Zoning Administrator, as set forth in Code Section 4-8-2.

DRAFT

Sec. 11-4. Provisions of Title Declared to be Minimum Requirements.

In their interpretation and application, the provisions of this Zoning Code shall be held to be minimum requirements, adopted for the promotion of the public health, safety, morals and general welfare. Whenever the requirements of this Zoning Code are at variance with the requirements of any other lawfully adopted rules, regulations, resolutions, deed restrictions, or covenants, the most restrictive or that imposing the higher standards, shall govern.

~~**Sec. 11-5. Authorized Uses.**~~

~~This Zoning Code is an exclusive zoning ordinance wherein the stated uses are the only uses which are permitted in each zoning district. Those uses not listed as permitted or conditionally permitted are not authorized. The question whether a specific use is encompassed by a listed use shall be subject to the Zoning Administrator's or designee's reasonable discretion. Further, when, as a result of subsequent changes in technology, business practice, or lifestyle, a use has not been mentioned in this Zoning Code, the Zoning Administrator or designee may permit such use if it is clear that the use is comparable to listed uses for a particular zoning district. Alternatively, the Zoning Administrator or designee may refer such proposed use to the Board of Adjustment for review as a conditional use. Any other use not listed may only be permitted upon amendment of this Zoning Code to include such use in the appropriate zoning district.~~

~~**Sec. 11-6. Rules for Determination of Zoning Districts.**~~

~~Where uncertainty exists as to the classification or boundaries of zoning districts as shown on the Moscow Zoning Map, the following rules shall apply:~~

~~A. Boundaries indicated as approximately following the center lines of streets, highways, or alleys shall be construed to follow such center lines;~~

~~B. Boundaries indicated as approximately following lot lines shall be construed as following such lot lines;~~

~~C. Boundaries indicated as approximately following City limits shall be construed as following such City limits;~~

~~D. Boundaries indicated as parallel to or extensions of features indicated in subsections A through C herein shall be so construed.~~

~~E. Distances not specifically indicated on the Moscow Zoning Map shall be determined by the scale of the map.~~

~~F. When physical or cultural features existing on the ground are at variance with those shown on the Moscow Zoning Map, or in other circumstances not covered by subsections A through E herein, the zoning district boundaries shall be determined in a manner consistent with the purposes of this Zoning Code.~~

~~G. Where a district boundary line appearing on the Moscow Zoning Map divides a platted lot which was in single ownership at the time of passage of this Chapter, the requirements of the less restrictive zoning district shall apply to the whole thereof, provided that such extension shall not include any part of such lot more than thirty (30) feet beyond a zoning district boundary line.~~

~~H. If the zoning district of any property as indicated on the Moscow Zoning Map should conflict with a textual description, the Moscow Zoning Map shall prevail.~~

~~I. If the zoning of a parcel of land is not shown on the Moscow Zoning Map, the parcel of land shall be deemed to be zoned FR, Farm, Ranch, Outdoor Recreation Zoning District.~~

~~J. All land hereafter annexed to the City shall be classified FR, Farm, Ranch, Outdoor Recreation Zoning District, pending study, public hearing and specific zoning district classification.~~

Sec. ~~11-7~~11-5. Complaints Regarding Violations.

Whenever- a violation of this Zoning Code occurs, or is alleged to have occurred, any person may file a written complaint. Such complaint stating fully the causes and basis thereof shall be

filed with the Zoning Administrator, who shall record properly such complaint, immediately investigate, and take action thereon as provided by this Zoning Code.

Sec. ~~11-8~~11-6. Penalties for Violations.

A. Any person or corporation, whether owner, lessee, principal, agent, employee, or otherwise, who violates any of the provisions of this Zoning Code, or permits any such violation or fails to comply with any of the requirements thereof, or who erects, constructs, reconstructs, alters, enlarges, converts, moves or uses any building or uses any land in violation of any detailed statement or plans submitted by him or her and approved under the provisions of this Title, shall be guilty of a misdemeanor and, upon conviction thereof in a court of competent jurisdiction shall be punished pursuant to this Code and the Idaho Code. Each seven (7) consecutive day's continued violation shall constitute a separate additional violation of this Code.

B. In case any building or structure is erected, constructed, reconstructed, altered, converted or maintained, or any building, structure or land is used in violation of this Zoning Code, the proper legal authorities of the City, in addition to other remedies, may institute any appropriate action or proceedings to prevent such unlawful erection, construction, reconstruction, alteration, conversion, maintenance or use, to restrain, correct, or abate such violation, to prevent any illegal act, conduct, business or use in or about such building, structure or land; and upon the failure or refusal of the proper local officer, board or body of the City to institute any such appropriate action or proceeding, any person aggrieved by such violation may institute such appropriate action or proceeding in like manner as such local officer, board or body of the City is authorized to do.

~~**Sec. 11-9. Definitions.**~~

~~For the purpose of this Zoning Code, certain words and terms used herein are defined as follows:~~

~~A. All words used in the present tense include the future tense; all words in the plural number include the singular number, and all words in the singular number include plural number; unless the natural construction of the wording indicates otherwise. The word "lot" includes the word "plot"; the word "building" includes the word "structure"; and the word "shall" is mandatory and not directory. The word "used" shall be deemed also to include "designed, intended or arranged to be used."~~

~~B. Unless otherwise specified, all distances shall be measured horizontally.~~

~~1. *Accessory Building.* A subordinate building, the use of which is incidental to the use of the main building on the same lot.~~

~~2. *Accessory Dwelling Unit.* A secondary dwelling unit that is accessory to a single family dwelling on a single lot, containing complete housekeeping facilities and which is added to, created within, or detached from the principal dwelling unit and subject to the Specific Use Standards of this Code.~~

~~3. *Accessory Structure.* Any structure attached to or located adjacent to a home, or on the same lot, including awnings, steps, porches, carports, garages, and storage buildings. An accessory structure shall be considered "detached" if located more than two feet (2') from the principal/primary structure. Size limitations contained within this Code pertaining to accessory structures, such as private garages and workshops, shall apply to the building footprint (the land area occupied by such accessory structure).~~

~~4. *Accessory Use.* A minor or second use for which a lot, structure or building is designed or employed in conjunction with but subordinate to its primary use. The term is synonymous with "secondary use."~~

~~5. *Affected Person.* A person who shows to the City, by a preponderance of evidence, that such person has an interest which may be adversely affected by the issuance or denial of a permit authorizing development or by a decision of the City.~~

DRAFT

6. *Alley.* A passageway open to public travel which affords generally a secondary means of vehicular access to abutting lots and is not intended for general traffic circulation.

7. *Alterations.* A change or rearrangement of the structural parts of existing facilities, or an enlargement by extending the sides or increasing the height or depth, or the moving from one (1) location to another. In buildings for business, commercial, industrial or similar uses, the installation or rearrangement of partitions affecting more than one-third (1/3) of a single floor area shall be considered an alteration.

8. *Antenna Tower.* A structure to house or hold a device which transmits or receives television, radio, or telephone communications but excluding those which are used as accessory to a residential use.

9. *Automobile Service Station* (See Gasoline Station).

10. *Basement.* That portion of a building partly underground and having at least one-half (1/2) of its height more than five feet (5') below the adjoining finish grade.

11. *Bed and Breakfast Inn.* A building occupied by its owner in which lodging and breakfast or meals are provided for not more than six (6) roomers for compensation on less than a weekly basis.

12. *Bedroom.* A room within an apartment unit other than a living room, kitchen, bathroom, eating area or utility room which may be used for sleeping purposes.

13. *Billboard* (See Sign).

14. *Boarding House.* A building occupied by its owner in which not more than six (6) roomers, lodgers and/or boarders are housed or fed for compensation on a weekly or longer basis.

15. *Building Area.* The total ground coverage of a building or structure which provides shelter measured from the outside of its external walls or supporting members or from a point four feet (4') in from the outside edge of a cantilevered roof, whichever covers the greatest area.

16. *Building.* "Building" means any structure having a roof, but excluding all forms of vehicles even though immobilized. When a use is required to be within a building, or where special authority granted pursuant to this Zoning Code requires that a use shall be within an entirely enclosed building, then the term "building" means one so designed and constructed that all exterior walls of the structures shall be solid from the ground to the roof line, and shall contain no openings except for windows and doors which are designed so that they may be closed.

17. *Building Height.* The vertical distance measured from the average elevation of the proposed finished grade at the front of the building to the highest point on the roof or parapet wall.

18. *Building Line.* The line of that face or corner or part of a building nearest the property line.

19. *Building Site.* The total horizontal area within the property lines excluding external streets, public or private.

20. *Carport.* A structure to house or protect motor vehicles owned or operated by the occupants of the main building which is open to the weather for at least forty percent (40%) of the total area of its sides.

21. *Clinic.* A building designed and used for the medical, dental and surgical diagnosis and treatment of patients under the care of doctors and nurses.

22. *Club.* An incorporated or unincorporated association of persons organized for a social, educational, literary or charitable purpose. Property occupied by a club shall be deemed to be semi-private in character and shall be subject to the regulations governing public buildings and places, excluding groups organized primarily to render a service which is normally considered a business.

23. *Commercial Use.* An activity maintaining a display of goods, merchandise or services, for sale or involving a rental fee.

24. *Commercial Vehicle.* A motor vehicle used for purposes other than a family car, such as a taxi, delivery or service vehicle.

25. *Conditional Use.* "Conditional use" means a use permitted in one (1) or more zoning district as defined by this Zoning Code but which, because of characteristics peculiar to such use, or because of size, technological processes or equipment, or because of the exact location with reference to surroundings, streets and existing improvements or demands upon public facilities, requires a special

DRAFT

~~degree of control to make uses consistent with and compatible to other existing or permissible uses in the same zoning district(s).~~

~~26. *Conditional Use Permit.* "Conditional Use Permit" means the documented evidence of authority granted by the Board of Adjustment to locate a conditional use at a particular location.~~

~~27. *Court.* An open, unoccupied space other than a yard, on the same lot with a building or buildings and which is bounded on two (2) or more sides by such buildings or building, including the open space in a house, court or apartment, providing access to the units thereof.~~

~~28. *Day Care Facility.* Any business, place of business or establishment which provides Day Care. This definition includes any Premises, location, play area, playground, organization, institution, partnership, school, home, residence, dwelling, group home, foster home, place or facility whether such business or concern calls itself a mini school, kindergarten, nursery, pre-school, club, cooperative, mother's-day-out, learning center or any other business whose activity is the same or substantially similar to a Day Care operation or concern.~~

~~a. The definition of Day Care Facility shall not include:~~

~~(1) Any institution, school or facility operated by or under the direction of the State of Idaho by any agency or political subdivision of the State of Idaho or by any other public body or public entity.~~

~~(2) Any elementary, junior high, or high school licensed and designated as such by the State of Idaho.~~

~~(3) Any medical or hospital facility operated pursuant to license issued by the State of Idaho.~~

~~b. There shall be four (4) classifications of Day Care Facility:~~

~~(1) Family Day Care Facility: A Day Care Facility providing Day Care for five (5) or fewer children;~~

~~(2) Group Day Care Facility: A Day Care Facility providing Day Care for six (6) to twelve (12) children;~~

~~(3) Small Day Care Facility: A Day Care Facility providing Day Care for thirteen (13) to twenty (20) children; and~~

~~(4) Large Day Care Facility: A Day Care Facility providing Day Care for twenty-one (21) or more children.~~

~~(5) The number of children in each of the above classifications (1) through (4) may be increased with the addition of school-aged children (first grade and up) from 3:00 p.m. until 6:00 p.m. on weekdays, and on teacher work-days, and on snow days, without affecting the classification level.~~

~~29. *Detached Building.* A building surrounded on all sides by open space.~~

~~30. *Dwelling, Single Family.* A detached building or manufactured home designed for, and occupied exclusively by, one (1) family. The classification "single family dwelling" shall include any home in which eight (8) or fewer unrelated mentally and/or physically handicapped or elderly persons reside; and which is supervised. Resident staff, if employed, need not be related to each other or to any of the mentally or physically handicapped or elderly persons residing in the home. No more than two (2) such staff shall reside in the dwelling at any one (1) time.~~

~~31. *Dwelling, Townhouse.* A structure which contains three (3) or more attached single family dwelling units that share a single common wall and where each unit is located upon a separate platted lot to allow for individual sale.~~

~~32. *Dwelling, Twinhome.* A structure which contains two (2) attached single family dwelling units that share a single common wall and where each unit is located upon a separate platted lot to allow for individual sale.~~

~~33. *Dwelling, Two (2) Family.* A building containing two (2) kitchens and designed to be occupied by two (2) families living independently of each other.~~

~~34. *Dwelling, Multi-Family.* A building designed to house three (3) or more families living independently of each other and having one (1) yard in common.~~

DRAFT

35. *Dwelling Unit.* A building or portion thereof providing complete housekeeping facilities for one (1) family. The term "dwelling" shall not be deemed to include motel, hotel, tourist home, bed and breakfast inn, or boarding house.

36. *Established Grade.* The high point of the sidewalk at the front or side lot line as established by the City.

37. *Family.*

a. For purposes of this "family" definition:

(1) "related" shall mean persons related by blood, marriage, adoption, and/or guardianship or other duly authorized relationship, and

(2) "family" shall not mean any society, club, fraternity, sorority, association, lodge, federation, bed and breakfast inn, boarding house, residential rental unit, or other like use or organization, and

(3) there shall be no more than one (1) "family" per dwelling unit, unless otherwise permitted by this Code.

(4) "living together as a single housekeeping unit" shall mean where all occupants of the dwelling unit enjoy a common right to use the entire dwelling, despite informal arrangements among members to designate certain areas as individual sleeping spaces, and where such persons share household living arrangements, including, but not limited to, rental or mortgage payments, utility payments, groceries, chores, maintenance of the premises, and common sanitary, living, and cooking supplies and/or facilities.

(5) "related by blood" shall mean persons related in any combination of the following: parents, step-parents, children, step-children, siblings, step-siblings, half-siblings, uncles, aunts, nephews, nieces, grandparents, grandchildren, great grandparents, great grandchildren, and first cousins.

b. One (1) or more related persons living together as a single housekeeping unit in a dwelling unit; or

c. not more than four (4) persons living together as a single housekeeping unit in a dwelling unit, when one (1) or more of them is not related to any other person in such dwelling unit; or

d. two (2) persons who are not related and any number of additional persons related to either of such two (2) unrelated persons, as long as all persons are living together as a single housekeeping unit in such dwelling unit; or

e. eight (8) or fewer unrelated mentally and/or physically handicapped or elderly persons reside; and which is supervised. Resident staff, if employed, need not be related to each other or to any of the mentally or physically handicapped or elderly persons residing in the home. No more than two (2) such staff shall reside in the dwelling at any one (1) time.

38. *Floor Area.* The sum of the gross horizontal areas of the floors of a building or buildings, measured from the exterior faces of exterior walls and from the center line of division walls. Floor area shall include: basement space, elevator shafts and stairwells at each floor, mechanical equipment rooms or attic spaces with headroom of seven feet (7') six inches (6"), exterior steps or stairs, terraces, breezeways and open spaces.

39. *Fraternity, Sorority Or Student Cooperative.* A building occupied by and maintained exclusively for students affiliated with an academic or professional college or university, or other recognized institution of higher learning and regulated by such institution.

40. *Functional Open Space.* Land within a development which is permanently reserved as open space, free from permanent structures, useful for recreational or social use by the residents of the development, or others; such space shall not include streets, roadways or parking areas.

41. *Garage, Private.* An enclosed space for the storage of one (1) or more private vehicles for residents of the premises.

42. *Garage, Public.* A building or portion thereof designed and used for the storage, rental, repair or servicing of motor vehicles or boats, as a business.

DRAFT

43. *Garden, Accessory.* The use of land for growing of produce and/or plants that is accessory to a permitted principal use, and where the produce from the garden is primarily grown for the consumption and use or donation by the person(s) residing or employed upon the subject property. Accessary Gardens may include the keeping of animals and fowl as permitted by this Code. On-site retail sales are not permitted in association with Accessary Gardens unless specifically permitted under this Code.

44. *Garden, Community.* The collective use of land for growing of produce and/or plants conducted by a group of people, where the site is commonly divided into plots that individuals may rent for the season, where the produce or plant materials grown upon the site are intended for consumption, use, or donation by the person(s) cultivating the land. On-site retail sales are not permitted in association with Community Gardens unless specifically permitted under this Code.

45. *Garden, Market.* The use of land for growing of produce and/or plants that is conducted by a single individual or a group of individuals where the produce or plant materials grown upon the site are intended to be sold for consumption by others. Market Gardens may include the keeping of animals and fowl as permitted by this Code. On-site retail sales are not permitted in association with Market Gardens unless specifically permitted under this Code.

46. *Gasoline Station.* Any area of land, including the structures thereon, that is used for the sale of gasoline or other motor fuels, oils, lubricants, and auto accessories and which may or may not include washing, lubricating, or other minor servicing, but no painting operation.

47. *Habitable Floor.* Any floor usable for living purposes, which includes working, sleeping, eating, cooking or recreation, or a combination thereof. A floor used only for storage purposes is not a "habitable floor."

48. *Home (Rest, Convalescent, Guest, For The Aged).* "Rest home," "convalescent home," "guest home" and "home for the aged" mean a home operated similarly to a boarding house but not restricted to any number of guests or guest rooms and the operator of which is licensed by the State to give special care and supervision to his or her charges, and in which nursing, dietary and other personal services are furnished to convalescents, invalids and aged persons, but in which homes are kept no persons suffering from a mental sickness, mental disease, disorder or ailment, or from a contagious or communicable disease, and in which homes are performed no surgery, maternity or other primary treatments such as are customarily provided in sanitariums or hospitals, and in which no persons are kept or served who normally would be admitted to a mental hospital.

49. *Home, Retirement.* A place of residence for several families or individuals in apartment like quarters, rented or condominium, which may feature services to retired persons such as limited nursing facilities, minimum maintenance living accommodations, and recreation programs and facilities.

50. *Hospital.* An establishment which provides accommodations, facilities and services over a continuous period of twenty-four (24) hours or more, for observation, diagnosis and care, of two (2) or more individuals, not related by blood or marriage to the operator, who are suffering from illness, injury, deformity or abnormality, or from any condition requiring obstetrical, medical or surgical services.

51. *Hotel.* Any building or portion thereof containing six (6) or more rooms that are rented, or hired out to be occupied or which are occupied for sleeping purposes for compensation, whether the compensation be paid directly or indirectly. A central kitchen and dining room and accessory shops and services catering to the general public can be provided. Not included are institutions housing persons under legal restraint or requiring medical attention or care.

52. *Institution, Educational.* A college or university supported by public or private funds, tuitions, contributions or endowments, giving advanced academic instructions as approved by the State Board of Education or by a recognized accrediting agency, excluding pre-school, elementary and junior or senior high schools, and trade and commercial schools; including fraternity and sorority houses.

53. *Junk Yard.* A lot, land or structure, or part thereof, used for the collecting, storage and sale of waste paper, rags, glass, plastic, scrap metal or discarded material, or for the collecting, dismantling, storage, salvaging or sale of parts of machinery or vehicles not in running condition.

DRAFT

54. *Kennel, Commercial.* Any lot or building in which four (4) or more dogs and/or cats are kept commercially for board or propagation or treatment.

55. *Kitchen.* Any rooms used or intended or designed to be used for cooking and/or preparation of food.

56. *Large Retail Establishment.*

a. A single retail establishment; or any combination of retail establishments in a single building with shared private off-street parking (such as a shopping mall); or any combination of retail establishments in separate and abutting buildings which are planned, constructed, and/or managed as a single property with shared private off-street parking (such as a shopping center); and

b. Which is greater than forty thousand (40,000) square feet of gross floor area.

57. *Lot.* A lot, in the meaning of this Zoning Code, is a single tract of land, no matter how legally described, whether by metes and bounds and/or by lot or lots and block designation as in a recorded plat, which at the time of applying for a building permit is designated by its owner or developer as the tract to be used, developed or built upon as a unit of land under single ownership or control and assigned to the particular use for which the building permit is being secured and having frontage on or access to a public street.

58. *Lot Area.* The total horizontal area within the boundary lines of a lot, excluding areas of dedicated and prescriptive public or railroad rights-of-way. The lot area shall include all utility easements and any flag pole portion of a flat lot.

59. *Lot, Corner.* A lot at the junction of and fronting on two (2) or more intersecting streets.

60. *Lot, Depth.* The mean dimension of the lot from the front street line to the rear line.

61. *Lot, Flag.* A lot with access provided to the part of the lot designated for use as a building site by a narrow corridor.

62. *Lot, Interior.* A lot fronting on one (1) street.

63. *Lot, Through.* A lot fronting on two (2) streets that do not intersect on the parcel's lot lines.

64. *Lot, Width.* The dimension of the lot line at the street, or in an irregular shaped lot the dimension across the lot at the building line, or in a corner lot the narrow dimension of the lot at a street or building line.

65. *Manufactured Home.* A structure as defined by Idaho Code Section 39-4105(14) and which meets the following additional standards:

a. The manufactured home shall be multisectional and enclose a space of not less than one thousand (1,000) square feet; and

b. The manufactured home shall be placed on an excavated and backfilled foundation and enclosed at the perimeter such that the home is located not more than twelve inches (12") above grade; and

c. The manufactured home shall have a pitched roof of at least three feet (3') in vertical rise for each twelve feet (12') in horizontal run; and

d. The manufactured home shall have any exterior siding and roofing material which is approved by the City for site-built homes; and

e. The manufactured home shall not be permitted within an area defined as a historic district under Section 67-4607, Idaho Code.

66. *Manufacturing, Light.* The manufacturing, compounding, treatment, processing, assembling, packaging, or testing of goods or equipment that is primarily indoors and which does not present any adverse effect upon surrounding property from smoke, noise, vibration, dust, glare, air pollution, or water pollution.

67. *Manufacturing, Heavy.* The extraction, processing or treatment of raw materials, or the manufacturing, compounding, treatment, processing, assembling, packaging, testing, handling, or storage of explosive or radioactive materials or products.

68. *Mean Depth.* The mean depth of a lot is the depth of such lot measured on a line approximately perpendicular to the fronting street and midway between the side lines of such lot.

DRAFT

69. *Motel.* A motel is a building or buildings, detached or in connected units or designed as a single structure, the units of which are used as individual sleeping or dwelling units, each having its own private toilet facilities and may or may not have its own kitchen facilities, and are designed primarily for the accommodation of transient travelers. Accommodations for trailers are not included. This term includes tourist court, motor hotel, motor lodge, cabin court, motor inn and similar names.

70. *Motorized Vehicle.* A motor driven conveyance capable of carrying one (1) or more passengers.

71. *Nonconforming Building Use.* The use of a building or structure which was a lawful use at the time this Zoning Code was passed but which use, because of the passage of this Zoning Code, does not conform to the regulations of the zoning district in which the use exists.

72. *Nonconforming Use.* A use which lawfully occupied a building or land at the time this Zoning Code becomes effective and which does not conform with the use regulations of the zoning district in which it is located.

73. *Off Street Parking.* Parking facilities for motor vehicles on other than a public street or alley.

74. *Open Space.* Any part of a lot unobstructed from the ground upward.

75. *Parking Area Or Lot.* An off-street parking facility designed for more than four (4) parking spaces.

76. *Parking Space.* Any use authorized or permitted along or in conjunction with another use in a specified district and subject to the limitations or the regulations of such use district.

77. *Planned Unit Development (PUD).* The PUD is characterized by a unified site design for a number of housing units and/or other buildings where clustering of buildings and utilization of open space will allow for enhanced land use. Through a PUD, a development maybe planned as a unit and the density of use may be calculated on the basis of the entire project, rather than on a lot by lot basis. Individual uses and structures in a PUD need not comply with specific building locations, height, building size, floor area, lot size and open space requirements of the underlying basic zone provided that requirements set forth herein are complied with, and the development as a whole is harmonious with the community, particularly adjacent land uses.

78. *Principal Use.* The primary or predominant use(s) to which a property is or may be devoted.

79. *Professional Offices.* Offices maintained and used as a place of business conducted by persons engaged in the healing arts for human beings, such as doctors and dentists (but wherein no overnight care for patients is given), and by engineers, attorneys, architects, accountants and other persons providing services utilizing training in and knowledge of the mental discipline as distinguished from training in occupations requiring mere skill or manual dexterity or the handling of commodities.

80. *Public Utility.* A public service corporation performing some public service and subject to special governmental regulations, or a governmental agency performing similar public services, the services by either of which are paid for directly by the recipients thereof. Such services shall include, but are not limited to, water supply, electric power, gas and transportation for persons and freight.

81. *Recreation Facilities, Community and/or Noncommercial.* Facilities such as rod and gun clubs and shooting ranges, swimming pools, athletic clubs, golf and country clubs, for the use of the general public or provided for and by members of semi-private corporations.

82. *Residential Rental Unit.* A residential dwelling unit not occupied by its owner(s) in which no more than six (6) roomers are housed for compensation on a weekly or longer basis and which is not a fraternity, sorority, student cooperative or tourist home.

83. *Retail Establishment.* A commercial establishment or enterprise engaged in the sale of goods or products which may include in-person purchase by the consumer at the location at which the goods or products are stored, or any other purchase and pick-up/delivery arrangement whereby the purchaser is the intended consumer and where the purchase is not made intentionally for the purpose of resale or distribution.

84. *Riding Academy.* Any establishment where horses are kept for riding, driving or stabling for compensation or as an accessory use in the operation of a club, association, ranch or similar establishment.

85. *Roomer.* Lodger or boarder occupying a rented room in private home or rooming house.

DRAFT

86. *Rooming House.* Same as "Boarding House."

87. *School.* An institution of learning which offers instruction in several branches of learning and study required to be taught in the public schools by the Idaho State Board of Education including elementary, junior or senior high, including public, private and parochial and also including preschool and kindergarten.

88. *School, Commercial.* A program whereby instruction is given to pupils in arts, crafts or trades and operated as a commercial enterprise.

89. *Self-Service Storage Facility.* A building or buildings consisting of individual, small, self-contained units, and the majority of the units being less than five hundred (500) square feet in area, that are leased or owned for the storage of business or household goods.

90. *Setback, Yard Requirements.* The distance that buildings or uses must be removed from their lot lines. Setbacks shall be measured, where applicable, from proposed or actual public or private street right-of-way lines.

91. *Sign.* A presentation, display, or representation of words or letters, or of a figure, design, picture, painting, color pattern, logo, emblem, symbol, trademark or other representation so as to give notice, advertise, call attention to, or identify an entity.

92. *Service Building.* A building housing communal toilet, laundry and other sanitary facilities necessary for the health and convenience of trailer court occupants.

93. *Special Use.* "Special use" means a use permitted in one (1) or more zones as defined by this Zoning Code but which, because of characteristics peculiar to such use, or because of size, technological processes or equipment, or because of the exact location with reference to surroundings, streets and existing improvements or demands upon public facilities, requires a special degree of control to make uses consistent with and compatible to other existing or permissible uses in the same zoning district(s). Special uses are distinguished from conditional uses by their potential impact on the entire community as opposed to a specific neighborhood, and are therefore judged for compliance with the Moscow Comprehensive Plan by Board of Adjustment.

94. *Special Use Permit.* "Special Use Permit" means the documented evidence of authority granted by the Board of Adjustment to locate a Special use at a particular location.

95. *Street.* A public thoroughfare which affords the principal means of access to abutting properties.

96. *Structure.* A combination of materials constructed and erected permanently on the ground or attached to something having a permanent location on the ground. Not included are residential fences three feet (3') or less in height, retaining walls, rockeries and similar improvements of a minor character three feet (3') or less in height.

97. *Structure, Temporary.* Not having or requiring permanent attachment to the ground, or involving structures which have no required permanent attachment to the ground.

98. *Studio Apartment.* A zero (0) bedroom apartment with a separate kitchenette and with a bathroom.

99. Temporary Use. A land use established for a limited duration which does not require permanent site improvements. Temporary Uses include, but are not limited to, the erection of temporary structures for activities such as fruit and vegetable sales, Christmas tree sales, fireworks sales, art sales, and other retail sales permitted in the zoning district within which the proposed use is to be located.

100. *Use.* The purpose land, a building or a structure now serves or for which it is occupied, maintained, arranged, designed or intended.

101. *Use District.* A portion or portions of the City designated on the Moscow Zoning Map as one (1) or more of the categories listed and described in this Zoning Code.

102. *Use Mixed.* Two (2) or more different uses of the same land, buildings or structures. When a development of land, buildings or structures has mixed use the less restrictive requirements will apply, unless the requirements are especially stated.

103. *Used Car Lot.* Any place outside a building where two (2) or more automobiles are offered for sale or are displayed.

DRAFT

~~104. *Variance.* A variance is the means by which an adjustment is made in the application of the specific regulations of this Zoning Code to a particular piece of property which, because of special circumstances applicable to it, is deprived of privileges commonly enjoyed by other properties in the same zoning district or vicinity, and which adjustment remedies disparity in privileges.~~

~~105. *Warehouse.* A building used primarily for the storage of goods and materials.~~

~~106. *Yard.* An open unoccupied space in front, rear or side on the same lot with a building or proposed building.~~

~~107. *Yard, Front.* An open unoccupied space extending from thirty inches (30") above the general ground level at the principal street line to the nearest point of the wall of the main building on the lot and including the full width of the lot to its side lines. For front yards that abut a Local Residential Street, as designated upon the Thoroughfare Plan within the City's Comprehensive Plan, the front yard shall be measured from the building lot side of the public sidewalk to the nearest point of the wall of the main building on the lot. In such cases where sidewalks do not exist in front of a building lot, the Zoning Administrator shall determine the point of measurement of the front yard based upon the location of adjacent principal structures, the likelihood of future sidewalk installation, and the anticipated location of such future sidewalk.~~

~~108. *Yard, Rear.* An open unoccupied space extending from thirty inches (30") the general level of the ground at the rear lot line to the nearest point of the wall of the main building and including the full width of the lot to its side lines.~~

~~109. *Yard, Service.* An open area, usually paved, with access to a street to allow vehicular access to a building or use for purposes of loading or unloading equipment, freight, livestock or people.~~

~~110. *Yard, Side.* An open unoccupied space extending from thirty inches (30") above the general ground level on the lot from the side yard line to the nearest point of the wall of the main building and extending from the front yard to the rear yard. Any lot line not a rear lot line or a front lot line shall be considered a side lot line.~~

~~111. *Yard, Street Side.* On a corner lot, an open unoccupied space extending from thirty inches (30") above the general ground level at the secondary street line to the nearest point of the wall of the main building on the lot and including the full length of the lot from the principal street line to the rear lot line.~~

~~(Ords. 96-09, 04/15/19969; 97-10, 04/07/1997; 97-13, 04/07/1997; 97-33, 11/03/1997; 99-33, 10/18/1999; 99-37, 12/06/1999; 99-38, 12/20/1999; 2004-08, 02/17/04; 2005-27, 08/15/05; 2006-03, 02/07/06; 2006-11, 08/07/06; 2007-10, 09/17/2007; 2007-11, 09/17/2007; 2008-22, 10/20/2008; 2010-09, 05/17/2010; 2010-10, 06/06/2010; 2010-24, 11/15/2010; 2011-11, 08/15/2011; 2011-15, 09/19/2011; 2013-15, 08/19/2013; 2013-16, 10/21/2013; 2015-04, 03/02/2015; 2015-06, 04/06/2015; 2015-07, 05/04/2015)~~

(Ord. 2017-xxxxxxxx, xx/xx/xxxx)

SECTION 7: SEVERABILITY. Provisions of this Ordinance shall be deemed severable and the invalidity of any provision of this Ordinance shall not affect the validity of remaining provisions. The remaining sections of Title 4 shall be in full force and effect.

SECTION 8: EFFECT ON OTHER ORDINANCES. Where the definitions contained in this Ordinance are in conflict with relevant portions of the City of Moscow, Idaho, Municipal Code, the definitions contained within those portions of the Moscow Municipal Code will be unaffected until such time, if any, as they are amended to be consistent with this Ordinance.

SECTION 9: EFFECTIVE DATE. This Ordinance shall be effective upon its passage, approval, and publication according to law.

DRAFT

PASSED by the City Council and APPROVED by the Mayor this _____ day of _____, 2018.

_____
Bill Lambert, Mayor

ATTEST:

_____
Laurie M. Hopkins, City Clerk

DRAFT