Moscow City Council

Regular Meeting
~Agenda~

www.ci.moscow.id.us

Laurie M. Hopkins
City Clerk

208.883.7015

Monday **May 2, 2022**	**7:00 PM**	**Council Chambers** **206 E. Third St.**

The Moscow Mayor, City Council and Staff welcome you to tonight's meeting. This meeting is open to the public. We appreciate and encourage public participation. For regular agenda items, an opportunity for public comment is sometimes provided after the staff report. However, the formality of procedures varies with the purpose and subject of the agenda item; therefore, the Mayor may exercise discretion in deciding when to allow public comment during the course of the proceedings and limitations may be placed on the time allowed for comments. Citizens wishing to comment on business that is not on the agenda will be provided the opportunity to do so during the public comment item on the agenda. If you plan to address the Council, you will find a list of "Tips for Addressing the Council" in the door pocket outside the City Council Chambers. Please note that Moscow City Council meetings are televised, videotaped and/or recorded. Links to view the City Council meeting live can be found on the City website, YouTube, Facebook and Spectrum Cable 1301. Thank you for your interest in City government.

PLEDGE OF ALLEGIANCE

PROCLAMATION

Bike Month

Public Service Recognition Week

CONSENT AGENDA

1. All Consent Items (ACTION ITEM)

A. Approval of Moscow City Council April 25, 2022 Minutes - Laurie M. Hopkins

B. Booster Station Replacement Phase II - Bid Results - Scott Bontrager

The Community Development Team will provide a summary of the bid results for phase two of the Booster Station Replacement project. Two responsive bids were received, with the lowest exceeding the engineer's estimate by approximately 46%. The Public Works/Finance Committee recommended rejection of all bids on April 25, 2022.

ACTION: Reject the low bid from Razz Construction, Inc.

C. Sixth Street Crossing Over Paradise Creek - Bid Results - Scott Bontrager

The Community Development Team will provide a summary of the bid results for the Sixth Street Crossing over Paradise Creek. The City received one bid, at $1,997,216.00, exceeding the engineer's estimate of $1,189,538.50. A complete bid analysis was included in the Public Works/Finance Committee packet. They recommended acceptance of the bid on April 25, 2022.

ACTION: Accept the low bid from Razz Construction, Inc., award the contract for $1,997,216.00, and authorize staff approval of construction change orders in an amount not to exceed 10% of the contract amount.

D. Latah County Broadband Coalition Pledge - Bill Belknap

Latah County is working to form a coalition made up of stakeholders throughout the County who are pledging to participate in information sharing and gathering to identify opportunities for broadband projects within the County and has approached the City to participate in this process. The following is a list of current coalition members: City of Potlatch, City of Bovill, City of Genesee, City of Kendrick, City of Juliaetta, City of Deary, City of Troy, Latah County Library District, Moscow School District, Kendrick Joint School District, Genesee Joint School District, Potlatch School District, Troy School District, University of Idaho, Gritman Medical Center, Senator David Nelson. There is no financial obligation to participate in the coalition and, instead, will serve to share information and coordinate efforts to expand broadband service within Latah County. This was reviewed by the Public Works/Finance Committee on April 25, 2022 and recommended for approval.

ACTION: Approve the Mayor's signature upon the Latah County Broadband Coalition Pledge.

E. Artwalk Season Finale Alcohol Use Request in Entertainment District - Amanda Argona

The City of Moscow Arts Department is hosting the Artwalk Season Finale on Thursday, June 16th, from 4 pm to 8 pm on Main Street between 3rd and 6th Streets. This annual event concludes the 2021-2022 Artwalk Season in an artistic and festive manner. As a City-hosted event, the Arts Department has facilitated the registration of Main Street vendors and demonstrators, as well as business and non-profit host locations. No more than 5 (five) beer/wine vendors will be authorized for beer/wine sales, and a variety of activities will take place including live music, Kidwalk, food sales, art demonstrations, and more. The event has been reviewed and approved as of April 14, 2022 . Following standard operating procedures for events with alcohol that are within the Entertainment District boundaries, Artwalk is requesting a temporary suspension of the open container law by resolution. Per Moscow City Code, Section 10-1-12; a draft resolution has been prepared for Council's consideration. This was reviewed by the Public Works/Finance Committee on April 25, 2022 and recommended for approval.

ACTION: Approve the resolution allowing for the temporary suspension of the open container law within the event footprint of the Artwalk Season Finale for the duration of the event.

REGULAR AGENDA

2. Mayors Appointments (ACTION ITEM)

3. Public Comment and Mayor's Response Period (limit 15 minutes)

4. Citizen Commission Report - Moscow Pathways Commission - David Schott / Tanya Denison

5. Downtown Streetscape Professional Services Agreement (ACTION ITEM) - Cody Riddle

The Community Development Team will present the results of a recent Request for Qualifications (RFQ) for design, engineering, and community engagement services for the Downtown Streetscape Design Project. Staff will seek Council approval to enter into a professional services agreement with the consultant team.

PROPOSED ACTIONS: Approval of the Professional Services Agreement with Welch Comer; or take other action deemed appropriate.

REPORTS

City Council

Mayor

Staff

ADJOURN

NOTICE: Moscow City Council and committee meetings are televised, videotaped and/or recorded. Individuals attending the meeting who require special assistance to accommodate physical, hearing, or other impairments, please contact the City Clerk, at (208) 883-7015 or TDD 883-7019, as soon as possible so that arrangements may be made.

BIKE MONTH PROCLAMATION

WHEREAS, National Bike Month began in May 1956; and

WHEREAS, bicycling has been an affordable, environmentally-sound mode of transportation, excellent form of exercise, and fun recreation since the first pedal-propelled bicycle appeared in the 1860s; and

WHEREAS, bicycling contributes to retail sales, tourism dollars, infrastructure, and policies that support community livability; and

WHEREAS, bicycle commuting benefits both employees and employers through better health and fitness, lower costs, and reduced parking space; and

WHEREAS, bicycling reduces heart disease, obesity, diabetes, and hypertension, and improves mental health and cardio-vascular fitness; and

WHEREAS, Bike to Work Week 2022 will take place May 16th through May 22nd; and

WHEREAS, to celebrate Bike to Work Day, the City of Moscow and the Moscow Pathways Commission will be on the corner of Sixth and Main Streets on Friday, May 20th from 7:00 a.m. to 9:00 a.m. The public is welcome to stop by and enjoy coffee donated by One World Café and light refreshments donated by the Moscow Food Co-op; and

WHEREAS, to celebrate Bike Month, the City of Moscow and the Moscow Pathways Commission will host the Annual Bike Tour on Saturday, May 21st, 2022, from 1:30 p.m. to 3:30 p.m., following the Moscow Farmers Market. The Annual Bike Tour will begin at the Ghormley Park shelter and ride out to the Idaho state line and back along the Paradise Pathway. Light refreshments will be served following the Annual Bike Tour.

NOW, THEREFORE, I, Art Bettge, Mayor for the City of Moscow, do hereby proclaim May 2022 to be

Bike Month

in Moscow, and I urge everyone who can cycle to work, school, shopping, and errands, or simply for pleasure.

DATED this 2nd day of May, 2022

_____

Arthur Bettge, Mayor

PUBLIC SERVICE RECOGNITION WEEK

In honor of the millions of public employees at the federal, state, county, and city levels:

WHEREAS, Americans are served every single day by public servants at the city, county, state, and federal levels. These unsung heroes do the work that keeps our nation working; and

WHEREAS, **p**ublic employees take not only jobs but oaths; and

WHEREAS, Moscow's public servants include public safety, public works, culture and recreation, community development, and administration professionals that support the delivery of quality municipal services and ensure the responsible use of the communities resources to build public trust and enhance Moscow's sense of community; and

WHEREAS, day in and day out, public servants provide the diverse services demanded by our local community with efficiency and integrity; and

WHEREAS, public servants at every level of service provide continuity to support the regular changes of leaders and elected officials in their communities; and

NOW, THEREFORE, I, Art Bettge, Mayor for the City of Moscow, do hereby proclaim May 1 – 7, 2022 as

Public Service Recognition Week

in the City of Moscow, and I encourage all citizens to recognize the accomplishments and contributions of government employees at all levels – city, county, state, and federal.

DATED this 18th day of April, 2022.

_____

Arthur D. Bettge, Mayor

Moscow City Council

Regular Meeting
~Minutes~

www.ci.moscow.id.us

Laurie M. Hopkins
City Clerk

208.883.7015

Monday, April 18, 2022 | **7:00 PM** | **Council Chambers 206 E. Third St.**

The meeting was called to order at 7:00 p.m.
PRESENT: Mayor Art Bettge, Sandra Kelly, Maureen Laflin, Hailey Lewis, Julia Parker, Gina Taruscio, Anne Zabala
STAFF: Bill Belknap, Mia Bautista, Cody Riddle, Nichole Baker, Kelli Cooper, Steve Schulte, Kyle Steele, Ty Thompson, Ryan DeBaum, Calvin Macy, Laurie M. Hopkins

PLEDGE OF ALLEGIANCE
Parker led the Pledge of Allegiance.

PROCLAMATION

Arbor Day
Mayor Bettge read the Arbor Day proclamation and presented it to Jen Pfiffner.

Earth Day
Mayor Bettge read the Earth Day proclamation and presented it to Steve McGeehan.

CONSENT AGENDA

1. All Consent Items (ACTION ITEM)

A. Approval of Moscow City Council April 4, 2022 Minutes - Laurie M. Hopkins

B. Disbursement Report March 2022 - Sarah Banks
Staff presented the March 2022 Accounts Payable Report to Public Works / Finance Committee on April 11, 2022. The Committee received the report and approved the disbursements as presented.
ACTION: Receive the Disbursements Report for the month of March 2022.

C. Second Quarter Financial Report January 1 ,2022 to March 31, 2022 for FY2022 - Sarah Banks
Staff presented the financial report for the second quarter of Fiscal Year 2022 to the Public Works / Finance Committee on April 11, 2022. The Committee received the report.
ACTION: Receive the FY2022 Second Quarter Report

D. Asphalt Rubber Chip - 2022 Bid Results and Contract Award - Todd Drage
The planned Pavement Preservation Program for FY2022 includes Asphalt Rubber (AR) Chip Seal road treatments to address multiple locations throughout the City. An AR chip seal is a proven method of road preservation, which uses recycled tire crumb in the asphalt binder to make chip seals more effective and longer lasting on heavily cracked and deteriorated streets. AR chip seals are primarily applied on residential and collector streets with heavy cracking and moderate distress to help preserve

DRAFT

and protect the surface and underlying pavement structure. The City published an advertisement for bids for the project on March 14, 2022 for the 2022 Asphalt Rubber Chip Seal road treatment project. The base bid for the project includes 32,730 square yards of Type II Asphalt Rubber Chip Seal. The engineer's estimate for the project was $360,030. Bids were opened on Tuesday, March 29, 2022. One responsive bid was received from Doolittle Construction LLC of Snoqualmie Washington for the amount of $327,300. A bid tabulation sheet is attached. The Public Works/Finance Committee recommended approval of this item on April 11, 2022.

ACTION: Approve the low responsive bid from Doolittle Construction, award the contract in the amount of $327,300, and, authorize staff approval for construction change orders in an amount not to exceed 10% of the contract amount.

E. Ridgeview Estates 2nd Addition Development Agreement Amendment - Todd Drage

The developer of Ridgeview Estates is requesting an amendment to the development agreement to modify the phasing associated with improvements required in the subdivision. This was reviewed by the Public Works/Finance Committee on April 11, 2022 and recommended for approval.

ACTION: Approve the Amended Development Agreement with Blum Enterprises - 3 LLC for Ridgeview Estates 2nd Addition.

Taruscio moved and Laflin seconded to approve the consent agenda as presented. Roll Call Vote: Ayes: Unanimous. Nays: None. Abstentions: None. Motion carried.

REGULAR AGENDA

2. Staff Recognition Report - Bill Belknap

Steele said he is recognizing Kelli Cooper who was honored as the 2021 Public Works employee of the year. The award is determined by employee nominations. She has been with the City since 2016 and is actively involved with the City initiatives. He read one of the nominations and honored Cooper with a plaque.

3. Mayors Appointments (ACTION ITEM)

Mayor Bettge presented the appointment of Catherine Harner to the Parks and Recreation Commission to the City Council for consideration. Taruscio moved and Kelly seconded the approval of the appointment. Roll Call Vote: Ayes: Unanimous. Nays: None. Abstentions: None. Motion carried.

4. Public Comment and Mayor's Response Period (limit 15 minutes)

No comment offered.

5. Earth Day Awards Presentation

Mayor Bettge and Cooper presented the awards to the following:

- City of Moscow for the Police Services Facility Project
- Climate Action Working Group in the organization category
- Nancy Chaney for Individual category
- Nicole Xiao in the Youth category
- Climate Justice League in the Student category
- Pollinator Summit in the Event category
- Parks Department for the City Department category
- Kelli Cooper in the City employee category

DRAFT

6. Annual Snow Season Update - Steve Schulte

Schulte said Moscow has received six inches of snow in April. From mid-December to the first week of January, Moscow received just under 40 inches and 54 inches total for this winter. The average annual amount is 50 inches. Plowing is critical and if not done, the city shuts down. Staff reviews weather and the ITD cameras. Every fall staff has pre-meeting to go over the snow removal program, do a dry run, and talk about safety and different scenarios. Moscow has 196 lane miles of road which includes the highways and can take up to 72 hours to plow. There are 188 cul-de-sacs and dead-ends and 9 miles of alleys. This year, 11,000 miles was put on the equipment. During a snow event there are 24 pieces of equipment. The berminator has helped tremendously in removing the snow in a day and average 2 removals a year. This year staff removed snow six times. Schulte said the City has a paint plow program where staff paints the plows white then take them to the schools so the kids paint the plows and then see their work around town. The Streets Division overtime line item is estimated in the middle. Staff continues to review processes to make snow removal better.

7. ARPA Small Business and Nonprofit COVID-19 Assistance Grant Program Resolution Update (ACTION ITEM) - Cody Riddle

Staff will present an amendment to Resolution 2021-30, previously approved by Council in December of 2021. If approved, the amendment will establish discretionary authority for the City Council to award more than the twenty-five thousand dollars ($25,000) that was allowed in the original resolution for Community and Social Service Non-Profits.

PROPOSED ACTIONS: Approve the updated Resolution; or take other action as deemed appropriate.

Riddle gave a brief background on the resolution saying the discretionary language was not included in the non-profit section of the resolution. The monies need to be obligated by 2024 and spent by 2026.

Lewis stated the intention of the program is good providing enough relief as possible but the requirement of 25% loss and details of the reports and volume of documents is excessive, not to mention the workload on staff. If there is money left over after the first set of applications, she would like to consider lowering the loss to 20% and provide funds to as many businesses and non-profits as possible. Lewis moved, Laflin seconded, to adopt the updated resolution.

Taruscio stated she has been torn. She wants to be sure by adding the words less to fund a specific agency, and more to be clear and specific in the resolution. She doesn't want to put staff through revising the resolution two or three more times.

Laflin said this edit makes the business section the same language as the non-profit so that they are consistent between the two.

Roll Call Vote: Ayes: Five (5). Nays: One (Taruscio). Abstentions: None. Motion carried.

Staff will reach out to the original applicants and notify them the Council has discretion on the amount granted but staff can still only recommend the $25,000.

REPORTS

City Council

Moscow Arts Commission – Laflin said the Commission discussed the third Thursday Artwalk and the last event will be about activities for children.

Transportation Commission - Laflin reported discussions included intercity transit funding, downtown street scape project, and a vacation of right-of-way.

Moscow Volunteer Fire Department - Zabala reported the Department is still working on the incentive

DRAFT

program.
Fair and Affordable Housing Commission – Parker said the Commission was updated on the 59 surveys that were returned; ARPA rental relief went to 145 renters; planning a tour of the Appaloosa mobile home park; and scheduling a joint meeting with the SEC regarding housing.
Farmers Market Commission – Lewis said the first market is May 7, 2022.
Planning and Zoning Commission – Lewis said the Commission has had lots of discussions about incentivizing developments and mixed use developments in a useful way.

Mayor

He attended the open houses at Haddock and Paul Mann buildings; met with local mayor's and Speaker of the House Bettge and other representatives and discussed issues facing the municipalities and interfacing with the Idaho Legislature.

Staff

The downtown clean-up is on April 22 and AIC district workshop takes place April 19.

ADJOURN TO EXECUTIVE SESSION PER IDAHO CODE 74-206 (1)(F) - THE MEETING WILL NOT RECONVENE.

Lewis moved, Parker seconded to adjourn to executive session per Idaho Code 74-206 (1)(F) at 8:18 p.m. Roll Call Vote: Ayes: Unanimous. Nays: None. Abstentions: None. Motion carried.

_____
Arthur D. Bettge, Mayor

ATTEST:

_____
Laurie M. Hopkins, City Clerk

DRAFT

CITY COUNCIL STAFF REPORT

DATE: Monday, May 2, 2022

AGENDA ITEM TITLE

Booster Station Replacement Phase II - Bid Results - Scott Bontrager

RESPONSIBLE STAFF	REVIEWED BY
Scott Bontrager, City Engineer	The Public Works/Finance Committee recommended rejection of all bids on April 25, 2022.

ADDITIONAL PRESENTER(S)	OTHER RESOURCES

DESCRIPTION

The Booster Station Replacement - Phase II project includes the construction of two (2) new booster pump stations located near the Indian Hills and Ponderosa Sub-divisions. The work will include new Concrete Masonry Units (CMU) block buildings, site improvements, piping, pumps, electrical components, and controls. The City published an advertisement for bids on March 12, 2022 and the Engineer's Estimate for construction is $2,909,100.00.

Bids were opened on Friday, April 15, 2022. Two responsive bids were received, with bids ranging from $4,248,950.00 to $4,867,933.00. Of those, the lowest responsive bid was submitted by Razz Construction, Inc. with a bid of $4,248,950. A bid analysis is included in the Committee packet.

STAFF RECOMMENDATION

Reject all bids and rebid at a later time to accumulate additional funds and seek an improved bid climate.

PROPOSED ACTIONS

ACTION: Reject the low bid from Razz Construction, Inc.

FISCAL IMPACT

Funds for the Booster Station Replacement - Phase II project would be expended from the Booster Stations Program 320-220-770-54.

PERSONNEL IMPACT

None if rejected

ATTACHMENTS

1. Booster Station Replacement Phase II - Bid Review

April 19, 2022

Scott Bontrager
City of Moscow, Idaho
206 E Third Street
Moscow, ID 83843

RE: BOOSTER STATION REPLACEMENT – PHASE II – BID REVIEW

Dear Scott:

On April 15, 2022, the City of Moscow received two bids for the Booster Station Replacement – Phase II project. The apparent low bid was submitted by Interstate Razz Construction, Inc. with a total Bid price of $4,248,950.00. For comparison, the Engineer's Opinion of Probable Cost for the project is $2,909,300.00 with contingency. A summary of the bids is included below:

Bidder	Base Bid Total
Razz Construction, Inc.	$4,248,950.00
McClure & Sons, Inc.	$4,867,933.00

We focused our review on the base bid cost and the contents of the bid packets to ensure that the required information was present. The required information was outlined in the Advertisement to Bid, Bidder's Checklists, Instructions to Bidders, and Bid Form, which were all provided in Volume I of the Contract Documents. We have reviewed the bids to determine general compliance with the administrative requirements of the bidding phase (i.e., whether each bid received was responsive) based on the following:

- Bid received on time in a properly sealed envelope.
- Addenda properly acknowledged.
- Bid Form was completed in general conformance with the Instructions to Bidders.
- Bid Security signed and included.
- Bidder's Idaho Contractor License number included.
- Bid signed.
- Statutory Naming of Subcontractors Form completed (Plumbing, Electrical, HVAC are listed).
- Non-Collusion, and Anti-Discrimination completed.
- SRF AIS documentation included/acknowledged? (Form AIS-1).

Our review did not include the following:

- Verification of the Bidder's business legal status,
- The signatory's authority to sign, and
- Other possible legal reasons for considering the bids unresponsive.

The bid documents for the lowest bid, from Razz Construction, Inc., appear to be complete and responsive. The next lowest bid also appears to be complete and responsive.

J-U-B verified the status of the Idaho Public Works license for both Bidders. We reviewed the license status on the Idaho Division of Building Safety (DBS) Public Works Contractor License Search (eTRAKiT) website on April 19, 2022 for all listed contractors and subcontractors.

We additionally looked up the bidders on the System for Award Management (SAM) website and confirmed they are Active and they have no active exclusions. Registration summaries from the SAM website for each are attached.

Based on this evaluation, it is our opinion that Razz Construction, Inc. is the lowest responsive bidder, and we recommend that they be considered for award of the contract. Based on our review of the contract documents, and upon completion of further review and concurrence by City legal staff and Idaho Department of Environmental Quality, we recommend the City consider awarding the project to Razz Construction, Inc. for a total contract price of Four Million Two Hundred Forty-Eight Thousand Nine Hundred Fifty and No/100 Dollars ($4,248,950.00). A copy of the bid from Razz Construction, Inc. and the Bid Evaluation are enclosed for reference.

Please conduct any additional review deemed necessary and provide your authorization of Award and we will move forward with the preparation of the Notice of Award and Contract Documents for Razz Construction, Inc.

If you would like to discuss our review or have additional questions, please do not hesitate to contact me at (208) 762-8787.

Sincerely,

Michelle L. Johnson, P.E.
Project Manager
J-U-B ENGINEERS, Inc.

Cc: Hannah Erickson, IDEQ – Hannah.Erickson@deq.idaho.gov

Enclosures

Client: City of Moscow Project: Booster Station Replacement - Phase II Bid Opening: April 15, 2022				ENGINEER'S ESTIMATE (Including contingencies)		Razz Construction, Inc. 4055 Hammer Drive Bellingham, WA 98226		McClure & Sons, Inc. 1517 Country Club Drive Mill Creek, WA 98012	
Item No.	**Item Description**	**Qty**	**Unit**	**Unit Price**	**Total Price**	**Unit Price**	**Total Price**	**Unit Price**	**Total Price**
Base Bid									
1	Indian Hills Booster Pump Station	1	LS	1,494,100.00	$ 1,494,100.00	$ 2,119,450.00	$ 2,119,450.00	$ 2,500,000.00	$ 2,500,000.00
2	Ponderosa Booster Pump Station	1	LS	1,415,200.00	$ 1,415,200.00	$ 2,129,500.00	$ 2,129,500.00	$ 2,367,933.00	$ 2,367,933.00
				TOTAL	**$ 2,909,300.00**	**TOTAL**	**$ 4,248,950.00**	**TOTAL**	**$ 4,867,933.00**

ARTICLE 1 – BID RECIPIENT

1.01 This Bid is submitted to:

City of Moscow Attn: City Clerk
504 S. Washington Street
Moscow, Idaho 83843

1.02 The undersigned Bidder proposes and agrees, if this Bid is accepted, to enter into an Agreement with Owner in the form included in the Bidding Documents to perform all Work as specified or indicated in the Bidding Documents for the prices and within the times indicated in this Bid and in accordance with the other terms and conditions of the Bidding Documents.

ARTICLE 2 – BIDDER'S ACKNOWLEDGEMENTS

2.01 Bidder accepts all of the terms and conditions of the Invitation to Bid and Instructions to Bidders, including without limitation those dealing with the disposition of Bid security. This Bid will remain subject to acceptance for 60 days after the Bid opening, or for such longer period of time that Bidder may agree to in writing upon request of Owner.

ARTICLE 3 – BIDDER'S REPRESENTATIONS

3.01 In submitting this Bid, Bidder represents that:

A. Bidder has examined and carefully studied the Bidding Documents, other related data identified in the Bidding Documents, and the following Addenda, receipt of ~~all~~ which is hereby acknowledged:

Addendum No.	Addendum Date
1	3/23/22
2	3/29/22
3	4/6/22
4	4/11/22

B. Bidder has visited the Site and become familiar with and is satisfied as to the general, local, and Site conditions that may affect cost, progress, and performance of the Work.

C. Bidder is familiar with and is satisfied as to all Laws and Regulations that may affect cost, progress, and performance of the Work.

D. Bidder has carefully studied all: (1) reports of explorations and tests of subsurface conditions at or contiguous to the Site and all drawings of physical conditions relating to existing surface or subsurface structures at the Site (except Underground Facilities) that have been identified in SC-4.02 as containing reliable "technical data," and (2) reports and drawings of Hazardous Environmental Conditions, if any, at the Site that have been identified in SC-4.06 as containing reliable "technical data."

E. Bidder has considered the information known to Bidder; information commonly known to contractors doing business in the locality of the Site; information and observations obtained from visits to the Site; the Bidding Documents; and the Site-related reports and drawings identified in the Bidding Documents, with respect to the effect of such information, observations, and documents on (1) the cost, progress, and performance of the Work; (2) the means, methods, techniques, sequences, and

procedures of construction to be employed by Bidder, including applying the specific means, methods, techniques, sequences, and procedures of construction expressly required by the Bidding Documents; and (3) Bidder's safety precautions and programs.

F. Bidder has obtained and carefully studied (or assumes responsibility for having done so) all additional or supplementary examinations, investigations, explorations, test, studies and data concerning conditions (surface, subsurface and Underground Facilities) at or contiguous to the Site which may affect cost, progress, or performance of the Work or which relate to any aspect of the means, methods, techniques, sequences, and procedures of construction to be employed by Bidder, including applying the specific means, methods, techniques, sequences, and procedures of construction expressly required by the Bidding Documents to be employed by Bidder safety precautions and programs incident thereto.

G. Based on the information and observations referred to in Paragraph 3.01.E above, Bidder does not consider that further examinations, investigations, explorations, tests, studies, or data are necessary for the determination of this Bid for performance of the Work at the price(s) bid and within the times required, and in accordance with the other terms and conditions of the Bidding Documents.

H. Bidder is aware of the general nature of work to be performed by Owner and others at the Site that relates to the Work as indicated in the Bidding Documents.

I. Bidder has given Engineer written notice of all conflicts, errors, ambiguities, or discrepancies that Bidder has discovered in the Bidding Documents, and the written resolution thereof by Engineer is acceptable to Bidder.

J. The Bidding Documents are generally sufficient to indicate and convey understanding of all terms and conditions for the performance of the Work for which this Bid is submitted.

ARTICLE 4 – BIDDER'S CERTIFICATION

4.01 Bidder certifies that:

A. This Bid is genuine and is not made in the interest of or on behalf of any undisclosed individual or entity and is not submitted in conformity with any collusive agreement or rules of any group, association, organization, or corporation;

B. Bidder has not directly or indirectly induced or solicited any other Bidder to submit a false or sham Bid;

C. Bidder has not solicited or induced any individual or entity to refrain from bidding; and

D. Bidder has not engaged in corrupt, fraudulent, collusive, or coercive practices in competing for the Contract. For the purposes of this Paragraph 4.01.D:

1. "corrupt practice" means the offering, giving, receiving, or soliciting of anything of value likely to influence the action of a public official in the bidding process;

2. "fraudulent practice" means an intentional misrepresentation of facts made (a) to influence the bidding process to the detriment of Owner, (b) to establish bid prices at artificial non-competitive levels, or (c) to deprive Owner of the benefits of free and open competition;

3. "collusive practice" means a scheme or arrangement between two or more Bidders, with or without the knowledge of Owner, a purpose of which is to establish bid prices at artificial, non-competitive levels; and

4. "coercive practice" means harming or threatening to harm, directly or indirectly, persons or their property to influence their participation in the bidding process or affect the execution of the Contract.

ARTICLE 5 – BASIS OF BID

5.01 Bidder will complete the Work in accordance with the Contract Documents for the following price(s):

BASE BID – BOOSTER STATION REPLACEMENT– PHASE II

Item No.	Item Description	Estimated Quantity	Unit	Unit Price	Total Price
1	Indian Hills Booster Pump Station	1	LS	$ 2,119,450.00	$ 2,119,450.00
2	Ponderosa Booster Pump Station	1	LS	$ 2,129,500.00	$ 2,129,500.00
				BASE BID TOTAL	$ 4,248,950.00

BASE BID TOTAL PRICE FOUR MILLION TWO HUNDRED FORTY-EIGHT THOUSAND NINE HUNDRED AND FIFTY AND 00/100
(use words)

5.02 Major Equipment Items: Certain items of major equipment to be provided under this Contract are tabulated in the Schedule of Manufacturers and Suppliers of Major Equipment and Material Items. In connection with the tabulation of major items of equipment included in the lump sum base bid, the following shall apply:

A. The lump sum bid shall include the installed prices from those manufacturers listed by the Owner as "Base Bid."

B. Bidder may include prices for listed alternate manufacturers or add additional manufacturers with corresponding prices, but only the manufacturers listed by the Owner as "Base Bid" will be considered in determining the low bid. Listing of alternate equipment is optional and will not result in submitting a non-responsible bid if none is entered.

C. The Owner may select the Base Bid equipment or items of equipment of any alternate manufacturer listed, at Owner's discretion.

D. After the Date of Agreement and prior to the selection of the major equipment items, the Contractor, if requested by the Engineer, shall provide information in sufficient detail to allow the Owner and the Engineer to determine whether or not the proposed alternate equipment is equivalent to that specified. The selection of any alternate equipment by the Owner does not relieve the Contractor of his/her responsibility to meet the requirements of the Contract Documents and Specifications.

E. Items of equipment selected by the Owner shall be installed at a contract price equal to the Base Bid lump sum adjusted by the add or deduct shown for the items selected by the Owner if

different from the Base Bid items. The Owner will select major equipment items within thirty (30) days after the date of the Notice to Proceed, provided Contractor has provided sufficient information to Owner/Engineer as noted above.

F. *The Bidder understands that equipment of a proposed alternate manufacturer must meet or exceed the requirements of the Contract Documents and Specifications, be of equal or better quality, and be of equal function to the base bid equipment.*

G. The price add/deduct for all items of equipment other than base bid items shall include the preparation and submission to the Owner of complete submittals, including detailed drawings showing all modifications, if any, necessary to accommodate such equipment.

H. The price add/deduct for all items of equipment other than base bid items shall cover a complete operating installation, including any and all buildings, mechanical and electrical work, controls and accessories necessary to accommodate the selected equipment.

I. The Bidder further understands that the Engineer will review said detailed Drawings or modifications and either approve them or indicate thereon changes necessary to comply with the project requirements in accordance with Article 6.05 of the General Conditions. Detailed drawings which are not approved will be revised and then resubmitted to the Engineer. The deduct and add amounts listed are "installed" prices and take into consideration and include any cost of the design or construction changes that may be required as a result of using the alternate equipment. Unless listed separately, the amount listed shall apply to the additive items also if they are awarded by the Owner.

ARTICLE 6 – TIME OF COMPLETION

6.01 Bidder agrees that the Work will be substantially complete and will be completed and ready for final payment in accordance with Paragraph 14.07 of the General Conditions on or before the dates or within the number of calendar days indicated in the Agreement.

6.02 Bidder accepts the provisions of the Agreement as to liquidated damages.

6.03 Bidder agrees to comply with Idaho Code 44-1001 through 44-1005, regarding employment of Idaho residents.

ARTICLE 7 – ATTACHMENTS TO THIS BID

7.01 The following documents are submitted with and made a condition of this Bid:

A. Required Bid security in accordance with Article 8 of the Instructions to Bidders;

B. Evidence of Authority to Sign;

C. Bidder shall include in their Bid the name, or names and address, or addresses, and Idaho Public Works Contractor License Numbers of the Subcontractors who shall, in the event the Bidder secures the Contract, subcontract the plumbing, heating and air-conditioning work, and electrical work under the general Contract;

D. Bidder's State of Idaho Public Works Contractor's License No. ;

E. Contractor's Non-Collusion Affidavit;

F. Anti-Discrimination Affidavit;

G. Required forms from IDEQ Idaho Drinking Water State Revolving Fund (DWSRF) Specifications Insert (Section 4).

1. FORM AIS-1 – Bidder's Certification of Compliance with the Current SRF Assistance American Iron and Steel (AIS) Provisions.

ARTICLE 8 – DEFINED TERMS

8.01 The terms used in this Bid with initial capital letters have the meanings stated in the Instructions to Bidders, the General Conditions, and the Supplementary Conditions.

ARTICLE 9 – BID SUBMITTAL

9.01 This Bid is submitted by:

If Bidder is:

An Individual

Name (typed or printed): N/A

By: _____
(Individual's signature)

Doing business as: _____

A Partnership

Partnership Name: N/A

By: _____
(Signature of general partner -- attach evidence of authority to sign)

Name (typed or printed): _____

Date of Qualification to do business in Idaho is ____/____/____.

A Corporation

Corporation Name: Razz Construction, Inc (SEAL)

State of Incorporation: Washington

Type (General Business, Professional, Service, Limited Liability): General

By: Donald A Rasmussen

(Signature -- attach evidence of authority to sign) - See Attached

Name (typed or printed): Donald A. Rasmussen

Title: President

(CORPORATE SEAL)

Attest Michelle Butler

Date of Qualification to do business in Idaho is 3 / 1 / 10.

A Joint Venture

Name of Joint Venture: N/A

First Joint Venturer Name: _____ (SEAL)

By: _____

(Signature of first joint venture partner -- attach evidence of authority to sign)

Name (typed or printed): _____

Title: _____

Date of Qualification to do business in Idaho is ____/____/____.

Second Joint Venturer Name: _____(SEAL)

By: _____

(Signature of second joint venture partner -- attach evidence of authority to sign)

Name (typed or printed): _____

Title: _____

Date of Qualification to do business in Idaho is ____/____/____.

Construction Inc

Authority to sign
pg. 1 of 2

Statement of Appointment- C.E.O. for RAZZ Construction, Inc.

On the date of Incorporation of RAZZ Construction, Inc., Donald A. Rasmussen was elected as Chief Executive Officer for the company. This appointment is detailed in the By-Laws of RAZZ Construction, Inc.

Signed: Donald A. Rasmussen
Donald A. Rasmussen- President

Date: May 19, 2005

4055 Hammer Drive Bellingham, WA 98226-7665
Ph: (360) 752-0011 Fx: (360) 752-0099 Email: donaldrazz@qwest.net

Authority to sign
Pg. 2 of 2

CORPORATE AUTHORIZATION RESOLUTION

Banner Bank

By: Razz Construction Inc
4055 Hammer Dr
Bellingham WA 98226

Referred to in this document as "Financial Institution"

Referred to in this document as "Corporation"

I, Donald Rasmussen, certify that I am Secretary (clerk) of the above named corporation organized under the laws of Washington, Federal Employer I.D. Number 20-2868525, engaged in business under the trade name of Razz Construction Inc, and that the resolutions on this document are a correct copy of the resolutions adopted at a meeting of the Board of Directors of the Corporation duly and properly called and held on _____ (date). These resolutions appear in the minutes of this meeting and have not been rescinded or modified.

AGENTS Any Agent listed below, subject to any written limitations, is authorized to exercise the powers granted as indicated below:

	Name and Title or Position	Signature	Facsimile Signature (if used)
A.	Donald Rasmussen	X Donald A. Rasmussen	N/A
B.	Karen Rasmussen	X Karen S. Rasmussen	X N/A
C.		X	X
D.		X	X
E.		X	X
F.		X	X

POWERS GRANTED (Attach one or more Agents to each power by placing the letter corresponding to their name in the area before each power. Following each power indicate the number of Agent signatures required to exercise the power.)

Indicate A, B, C, D, E, and/or F		Description of Power	Indicate number of signatures required
N/A	(1)	Exercise all of the powers listed in this resolution.	N/A
	(2)	Open any deposit or share account(s) in the name of the Corporation.	
	(3)	Endorse checks and orders for the payment of money or otherwise withdraw or transfer funds on deposit with this Financial Institution.	
N/A	(4)	Borrow money on behalf and in the name of the Corporation, sign, execute and deliver promissory notes or other evidences of indebtedness.	N/A
N/A	(5)	Endorse, assign, transfer, mortgage or pledge bills receivable, warehouse receipts, bills of lading, stocks, bonds, real estate or other property now owned or hereafter owned or acquired by the Corporation as security for sums borrowed, and to discount the same, unconditionally guarantee payment of all bills received, negotiated or discounted and to waive demand, presentment, protest, notice of protest and notice of non-payment.	N/A
N/A	(6)	Enter into a written lease for the purpose of renting, maintaining, accessing and terminating a Safe Deposit Box in this Financial Institution.	N/A
A	(7)	Other The Corporation designates this single agent as their Customer Administrator with full rights and authorities as described in Banner Bank's Online Cash Managment Agreement.	N/A

LIMITATIONS ON POWERS The following are the Corporation's express limitations on the powers granted under this resolution.

EFFECT ON PREVIOUS RESOLUTIONS This resolution supersedes resolution dated _____. If not completed, all resolutions remain in effect.

CERTIFICATION OF AUTHORITY
I further certify that the Board of Directors of the Corporation has, and at the time of adoption of this resolution had, full power and lawful authority to adopt the resolutions on page 2 and to confer the powers granted above to the persons named who have full power and lawful authority to exercise the same. (Apply seal below where appropriate.)

☐ If checked, the Corporation is a non-profit corporation.

In Witness Whereof, I have subscribed my name to this document and affixed the seal of the Corporation on October 13, 2010 (date).

Donald A. Rasmussen — Attest by One Other Officer

Donald A. Rasmussen — Secretary

Express © 1985, 1997 Bankers Systems, Inc., St. Cloud, MN Form CA-1 5/1/2003

(page 1 of 2)

Brad Little
Governor

State of Idaho

Division of Building Safety

PUBLIC WORKS CONTRACTORS LICENSING

CONTRACTOR

005083 - UNLIMITED - 1- 2
License Number

03/01/2010
Original License Issued

This is to certify that

RAZZ CONSTRUCTION, INC.

has fulfilled the requirements of the law relating to licensing in Idaho Code, Title 54, Chapter 19 & 45
and is hereby granted this certificate.

This license expires: 03/31/2023

Licensee Signature

Ron Whitney, Administrator

(Each joint venturer must sign. The manner of signing for each individual, partnership, and corporation that is a party to the joint venture should be in the manner indicated above.)

Bidder's Business Address 4055 Hammer Drive

Bellingham, WA 98226

Phone No. (360) 752-0011 Fax No. (360) 752-0099

E-mail donr@razzconstruction.com

SUBMITTED on April 12, 2022.

Idaho Public Works Contractor License No. 005083-unlimited-1-2

THIS PAGE WAS INTENTIONALLY LEFT BLANK

City of Moscow
Booster Station Replacement – Phase II

Contractor's Non-Collusion Affidavit

State of Washington

) SS

County of Whatcom

Bid for Donald A. Rasmussen, being first duly sworn, deposes, and says that he is President [sole owner, a partner, president, secretary, etc.] of, Razz Construction, Inc [Bidder],

the party making the foregoing Bid; that such Bid is not made in the interest of or on behalf of any undisclosed person, partnership, company, association, organization or corporation; that such Bid is genuine and not collusive or sham; that said Bidder has not directly or indirectly induced or solicited any other Bidder to put in a false or sham Bid and has not directly or indirectly colluded, conspired, connived or agreed with any Bidder or anyone else to put in a sham Bid, nor that anyone shall refrain from bidding; that said Bidder has not in any manner, directly or indirectly, sought by agreement, communication or conference with anyone to fix the Bid Price of said Bidder or of any other Bidder, nor to fix any overhead, profit or cost element of such Bid Price, nor of that of any other Bidder, nor to secure any advantage against the public body awarding the Contract or anyone interested in the proposed Contract; that all statements contained in such Bid are true; and, further, that said Bidder has not directly or indirectly submitted his Bid Price or any breakdown thereof, nor the contents thereof, nor divulged information or data relative thereto, nor paid and will not pay any fee in connection therewith to any corporation, partnership, company, association, organization, bid depository, nor to any member or agent thereof, nor to any other individual except to such person(s) as has/have a partnership or other financial interest with said Bidder in his general business.

Signed: Donald A Rasmussen
Donald A. Rasmussen

Title: President

Subscribed and sworn to before me this 12th day of April, 2022

YVETTE S MURPHY
MY COMM. EXP. 06/20/2023
NOTARY PUBLIC
COMM. NO. 34528
STATE OF WASHINGTON
(SEAL)

Notary Public Yvette S. Murphy
State of Washington
My Commission Expires 06/20/2023

THIS PAGE WAS INTENTIONALLY LEFT BLANK

City of Moscow
Booster Station Replacement – Phase II

Anti-Discrimination Affidavit

STATE OF Washington

COUNTY OF Whatcom;

The Bidder hereby covenants, stipulates, and agrees that no person shall be discriminated against in the bidding of the services and/or materials herein under and that the Bidder shall not refuse to hire any person therefore because of such person's race, creed, sex, color, or national origin, unless based on a bona fide occupational qualification. Also, the Bidder will in no manner discriminate against any person because of such person's race, creed, sex, color, or national origin. Any such discrimination shall be deemed a violation of this Bid and shall render this Bid subject to forfeiture.

Donald A Rasmussen

Contractor's Signature Donald A. Rasmussen - President

Subscribed and sworn to before me this 12 day of April, 2022

YVETTE S MURPHY
MY COMM. EXP. 06/20/2023
NOTARY PUBLIC
COMM. NO. 34528
STATE OF WASHINGTON

Yvette S. Murphy

Notary Public

State of WASHINGTON

Residing at Bellingham, WA.

My Commission Expires 06/20/2023

THIS PAGE WAS INTENTIONALLY LEFT BLANK

BID BOND

Any singular reference to Bidder, Surety, Owner or other party shall be considered plural where applicable.

BIDDER *(Name and Address)*:
Razz Construction, Inc.
4055 Hammer Drive
Bellingham, WA 98226

SURETY *(Name and Address of Principal Place of Business)*:
Old Republic Surety Company
P.O. Box 1635
Milwaukee, WI 53201

OWNER *(Name and Address)*:
City of Moscow
206 E Third Street
Moscow, ID 83843

BID
Bid Due Date: April 12, 2022
Description *(Project Name and Include Location)*: Booster Station Replacement - Phase II

BOND
Bond Number: CSBA-20439
Date *(Not earlier than Bid due date)*:
Penal sum Five Percent of Amount Bid (Written in Words) $ 5% (Figures)

Surety and Bidder, intending to be legally bound hereby, subject to the terms set forth below, do each cause this Bid Bond to be duly executed by an authorized officer, agent, or representative.

Signed, Sealed and Dated: April 6, 2022

BIDDER	SURETY
Razz Construction, Inc. (Seal)	Old Republic Surety Company (Seal)
Bidder's Name and Corporate Seal	Surety's Name and Corporate Seal
By: Donald A Rasmussen	By:
Signature	Signature (Attach Power of Attorney)
Donald A. Rasmussen	Daniel Huckabay
Print Name	Print Name
President	Attorney-in-Fact
Title	Title
Attest: Michelle Biles	Attest:
Signature Michelle Biles	Signature
Contract Administrator	
Title	Title

CONSTRUCTION INC. CORPORATE SEAL 05/2005 WASHINGTON

Note: Above addresses are to be used for giving any required notice. Provide execution by any additional parties, such as joint venturers, if necessary.

1. Bidder and Surety, jointly and severally, bind themselves, their heirs, executors, administrators, successors, and assigns to pay to Owner upon default of Bidder the penal sum set forth on the face of this Bond. Payment of the penal sum is the extent of Bidder's and Surety's liability. Recovery of such penal sum under the terms of this Bond shall be Owner's sole and exclusive remedy upon default of Bidder.

2. Default of Bidder shall occur upon the failure of Bidder to deliver within the time required by the Bidding Documents (or any extension thereof agreed to in writing by Owner) the executed Agreement required by the Bidding Documents and any performance and payment bonds required by the Bidding Documents.

3. This obligation shall be null and void if:

3.1 Owner accepts Bidder's Bid and Bidder delivers within the time required by the Bidding Documents (or any extension thereof agreed to in writing by Owner) the executed Agreement required by the Bidding Documents and any performance and payment bonds required by the Bidding Documents, or

3.2 All Bids are rejected by Owner, or

3.3 Owner fails to issue a Notice of Award to Bidder within the time specified in the Bidding Documents (or any extension thereof agreed to in writing by Bidder and, if applicable, consented to by Surety when required by Paragraph 5 hereof).

4. Payment under this Bond will be due and payable upon default of Bidder and within 30 calendar days after receipt by Bidder and Surety of written notice of default from Owner, which notice will be given with reasonable promptness, identifying this Bond and the Project and including a statement of the amount due.

5. Surety waives notice of any and all defenses based on or arising out of any time extension to issue Notice of Award agreed to in writing by Owner and Bidder, provided that the total time for issuing Notice of Award including extensions shall not in the aggregate exceed 120 days from Bid due date without Surety's written consent.

6. No suit or action shall be commenced under this Bond prior to 30 calendar days after the notice of default required in Paragraph 4 above is received by Bidder and Surety and in no case later than one year after Bid due date.

7. Any suit or action under this Bond shall be commenced only in a court of competent jurisdiction located in the state in which the Project is located.

8. Notices required hereunder shall be in writing and sent to Bidder and Surety at their respective addresses shown on the face of this Bond. Such notices may be sent by personal delivery, commercial courier, or by United States Registered or Certified Mail, return receipt requested, postage pre-paid, and shall be deemed to be effective upon receipt by the party concerned.

9. Surety shall cause to be attached to this Bond a current and effective Power of Attorney evidencing the authority of the officer, agent, or representative who executed this Bond on behalf of Surety to execute, seal, and deliver such Bond and bind the Surety thereby.

10. This Bond is intended to conform to all applicable statutory requirements. Any applicable requirement of any applicable statute that has been omitted from this Bond shall be deemed to be included herein as if set forth at length. If any provision of this Bond conflicts with any applicable statute, then the provision of said statute shall govern and the remainder of this Bond that is not in conflict therewith shall continue in full force and effect.

11. The term "Bid" as used herein includes a Bid, offer, or proposal as applicable.

THIS PAGE WAS INTENTIONALLY LEFT BLANK

ACKNOWLEDGMENT

A notary public or other officer completing this certificate verifies only the identity of the individual who signed the document to which this certificate is attached, and not the truthfulness, accuracy, or validity of that document.

State of California
County of Orange)

On 04/06/2022 before me, Shaunna Rozelle Ostrom, Notary Public
(insert name and title of the officer)

personally appeared Daniel Huckabay,
who proved to me on the basis of satisfactory evidence to be the person(s) whose name(s) is/are subscribed to the within instrument and acknowledged to me that he/she/they executed the same in his/her/their authorized capacity(ies), and that by his/her/their signature(s) on the instrument the person(s), or the entity upon behalf of which the person(s) acted, executed the instrument.

I certify under PENALTY OF PERJURY under the laws of the State of California that the foregoing paragraph is true and correct.

WITNESS my hand and official seal.

FRS3 SHAUNNA ROZELLE OSTROM
COMM. #2332742
Notary Public-California
ORANGE COUNTY
My Comm. Expires Aug 31, 2024 FRS3

Signature _____ (Seal)
Shaunna Rozelle Ostrom

OLD REPUBLIC SURETY COMPANY

Bond No. CSBA-20439

POWER OF ATTORNEY

KNOW ALL MEN BY THESE PRESENTS: That OLD REPUBLIC SURETY COMPANY, a Wisconsin stock insurance corporation, does make, constitute and appoint:

Daniel Huckabay, Arturo Ayala, Shaunna Rozelle Ostrom, Frank Morones,

Michael D. Stong, Ben Stong of Orange, CA

its true and lawful Attorney(s)-in-Fact, with full power and authority for and on behalf of the company as surety, to execute and deliver and affix the seal of the company thereto (if a seal is required), bonds, undertakings, recognizances or other written obligations in the nature thereof, ***(other than bail bonds, bank depository bonds, mortgage deficiency bonds, mortgage guaranty bonds, guarantees of installment paper and note guaranty bonds, self-insurance workers compensation bonds guaranteeing payment of benefits, asbestos abatement contract bonds, waste management bonds, hazardous waste remediation bonds or black lung bonds),*** as follows:

ALL WRITTEN INSTRUMENTS

and to bind OLD REPUBLIC SURETY COMPANY thereby, and all of the acts of said Attorneys-in-Fact, pursuant to these presents, are ratified and confirmed. This appointment is made under and by authority of the board of directors at a special meeting held on February 18, 1982.

This Power of Attorney is signed and sealed by facsimile under and by the authority of the following resolutions adopted by the board of directors of the OLD REPUBLIC SURETY COMPANY on February 18,1982.

RESOLVED that, the president, any vice-president or assistant vice president, in conjunction with the secretary or any assistant secretary, may appoint attorneys-in-fact or agents with authority as defined or limited in the instrument evidencing the appointment in each case, for and on behalf of the company to execute and deliver and affix the seal of the company to bonds, undertakings, recognizances, and suretyship obligations of all kinds; and said officers may remove any such attorney-in-fact or agent and revoke any Power of Attorney previously granted to such person.

RESOLVED FURTHER, that any bond, undertaking, recognizance, or suretyship obligation shall be valid and binding upon the Company

(i) when signed by the president, any vice president or assistant vice president, and attested and sealed (if a seal be required) by any secretary or assistant secretary; or

(ii) when signed by the president, any vice president or assistant vice president, secretary or assistant secretary, and countersigned and sealed (if a seal be required) by a duly authorized attorney-in-fact or agent; or

(iii) when duly executed and sealed (if a seal be required) by one or more attorneys-in-fact or agents pursuant to and within the limits of the authority evidenced by the Power of Attorney issued by the company to such person or persons.

RESOLVED FURTHER that the signature of any authorized officer and the seal of the company may be affixed by facsimile to any Power of Attorney or certification thereof authorizing the execution and delivery of any bond, undertaking, recognizance, or other suretyship obligations of the company; and such signature and seal when so used shall have the same force and effect as though manually affixed.

IN WITNESS WHEREOF, OLD REPUBLIC SURETY COMPANY has caused these presents to be signed by its proper officer, and its corporate seal to be affixed this 13th day of May, 2020.

OLD REPUBLIC SURETY COMPANY

Karen J. Haffner
Assistant Secretary

OLD REPUBLIC SURETY COMPANY CORPORATE SEAL 1981

Alan Pavlic
President

STATE OF WISCONSIN, COUNTY OF WAUKESHA - SS

On this 13th day of May, 2020, personally came before me, Alan Pavlic and Karen J Haffner, to me known to be the individuals and officers of the OLD REPUBLIC SURETY COMPANY who executed the above instrument, and they each acknowledged the execution of the same, and being by me duly sworn, did severally depose and say: that they are the said officers of the corporation aforesaid, and that the seal affixed to the above instrument is the seal of the corporation, and that said corporate seal and their signatures as such officers were duly affixed and subscribed to the said instrument by the authority of the board of directors of said corporation.

KATHRYN R. PEARSON NOTARY PUBLIC STATE OF WISCONSIN

Kathryn R. Pearson
Notary Public

My Commission Expires: September 28, 2022

(Expiration of notary's commission does not invalidate this instrument)

CERTIFICATE

I, the undersigned, assistant secretary of the OLD REPUBLIC SURETY COMPANY, a Wisconsin corporation, CERTIFY that the foregoing and attached Power of Attorney remains in full force and has not been revoked; and furthermore, that the Resolutions of the board of directors set forth in the Power of Attorney, are now in force.

74 7242

OLD REPUBLIC SURETY COMPANY CORPORATE SEAL 1981

Signed and sealed at the City of Brookfield, WI this 6th day of April, 2022.

Karen J. Haffner
Assistant Secretary

ORSC 22262 (3-06)

CSBA

City of Moscow
Booster Station Replacement – Phase II

Naming of Subcontractors Form

Per Idaho Code, §67-2310, Bidder shall include in his or her Bid the names and address, and Idaho Public Works Contractor License Number of the Subcontractors who shall, in the event the Bidder secures the Contract, subcontract the plumbing, heating and air-conditioning work, and electrical work under the general Contract. Failure to name Subcontractors as required shall render any Bid submitted by the Bidder unresponsive and void.

Subcontractor Name and Address	Classification	License Number
RAZZ CONSTRUCTION 4055 HAMMER DR. BELLINGHAM, WA. 98226	Plumbing	005083-UNLIMITED-1-2
AIR TECH MECHANICAL CO. 7820 FRANKLIN ST. COEUR D'ALENE, ID 83814	HVAC	12273-A-4
KME SPECIALTIES LLC PO BOX 99 TROY, ID 83871	Electrical	030727-CC-1-3-4

NOTES TO USER

1. This form must be included for all bids.

City of Moscow
Booster Station Replacement – Phase II

Naming of Subcontractors Form

Per Idaho Code, §67-2310, Bidder shall include in his or her Bid the names and address, and Idaho Public Works Contractor License Number of the Subcontractors who shall, in the event the Bidder secures the Contract, subcontract the plumbing, heating and air-conditioning work, and electrical work under the general Contract. Failure to name Subcontractors as required shall render any Bid submitted by the Bidder unresponsive and void.

Subcontractor Name and Address	Classification	License Number
	Plumbing	
	HVAC	
	Electrical	

NOTES TO USER

1. This form must be included for all bids.

THIS PAGE WAS INTENTIONALLY LEFT BLANK

To be submitted as part of the sealed bid; Recipient forwards a copy to DEQ

FORM AIS-1
Bidder's Certification of Compliance
With the Current SRF Assistance American Iron and Steel (AIS) Provisions

(To be submitted as part of the sealed bid)

Bidder's Statement of Certification

The Bidder acknowledges to and for the benefit of the ("Owner") for the ("Project") that the Bidder understands the project is being funded in part with SRF Assistance. "AIS" requirements specify that all iron and steel products used in the project shall be produced in the United States. Consistent with the terms of the Owner's bid solicitation and the provisions of SRF Assistance, the Bidder hereby represents and warrants to and for the benefit of the Owner that:

1. The Bidder has reviewed and understands the AIS requirements.

2. The Bidder certifies that the iron and steel goods used in the project will be produced in the United States in a manner that complies with the AIS requirements unless a waiver of the requirements is requested by the Owner and approved by the EPA.

3. The Bidder agrees to provide to the Owner reasonable, sufficient, and timely information, certification, or verification of the United States production of each component contained in Attachment 6 as a prior condition for approval of - and reimbursement for - materials received.

4. The undersigned hereby acknowledges that the iron and steel products utilized in this project will meet the current SRF Assistance AIS requirements, and that all required Manufacturer/Supplier Certification Statements or waivers from EPA will be obtained to document compliance with the AIS requirements.

Bidder Signature: Donald A Rasmussen Date: 4/12/22
Donald A. Rasmussen

Title: President

Organization: Razz Construction, Inc.

To Be Submitted Prior to Authorization to Award; Recipient forwards a copy to DEQ

ATTACHMENT A

SWORN STATEMENT OF COMPLIANCE WITH DISADVANTAGED BUSINESS ENTERPRISE (DBE) UTILIZATION REQUIREMENTS

To be eligible for award of this contract, each successful bidder must execute, and submit, as part of their proposal, and together with their bid, the following certification relating to DBE participation. The certification below shall be deemed a part of the resulting contract.

The bidder has taken the following "Good Faith Efforts" in awarding subcontracts:

1. Ensure DBEs are made aware of contracting opportunities to the fullest extent practicable through outreach and recruitment activities. For Indian Tribal, State and Local Government recipients, this will include placing DBEs on solicitation lists and soliciting them whenever they are potential sources.
2. Make information on forthcoming opportunities available to DBEs and arrange time frames for contracts and establish delivery schedules, where the requirements permit, in a way that encourages and facilitates participation by DBEs in the competitive process. This includes, whenever possible, posting solicitations for bids or proposals for a minimum of 30 calendar days before the bid or proposal closing date.
3. Consider in the contracting process whether firms competing for large contracts could subcontract with DBEs. For Indian Tribal, State and local Government recipients, this will include dividing total requirements when economically feasible into smaller tasks or quantities to permit maximum participation by DBEs in the competitive process.
4. Encourage contracting with a consortium of DBEs when a contract is too large for one of these firms to handle individually.
5. Use the services and assistance of the Idaho Transportation Department, Idaho Department of Environmental Quality's Fiscal Office, SBA and the Minority Business Development Agency of the Department of Commerce, as appropriate.
6. If the prime contractor awards subcontracts, require the prime contractor to take the above steps.

Donald A Rasmussen 4/12/22

Signature Date

Name and title of Signer: Donald A. Rasmussen - President

Email Address: donr@razzconstruction.com

* see Attached Razz Supplier List

Booster Station Replacement - Phase II

Contract No.

RAZZ CONSTRUCTION
SUPPLIERS LIST
BSRII

Start date:
ending Award dat

			Subcontractors						
			SURVEYING						
SUB-05		01340	Surveyor	Sawtooth Land Survey, LLC	560 W. Canfield Ave., Ste 200	Coeur d'Alene	ID	83815	208-572-7028
		01340	Surveyors	Silver Valley Engineering	46270 Golcconda Rd	Wallace	ID	83873	(208) 753-3812
				Garcia Land Surveying LLC-**DBE**					
				O'Bunco Engineering Inc-**DBE**					
				Nemec Engineering LLC- **DBE**					
			QUALITY CONTROL	ALLWEST TESTING	MERIDIAN	ID			208-895-7898
		02000	Division 2 - Site Construction						
		02055	Soil Materials						
		02060	Aggregate Materials						
				North Idaho Crushing					(208) 882-3573
				Atlas Sand & Rock					(509) 332-7004
		02110	Site Clearing						
		02300	Driveways						
		02311	Rough Grading						
		02315	Excavation						
		02320	Backfilling and Compacting for Structures						
		02324	Backfill and Compacting for Utilities						
		02677	Disinfection and Iron Bacteria Prevention						

		02830	Chain Link Fencing						
				Burly Products					(208) 262-9531
				Idaho Fence					(208) 687-2296
				Boise River Fence Inc.- **DBE**					
				Eagle Rock Blasting-**DBE**					
				All Rail Construction LLC-**DBE**					
		02890	Underground Irrigation System						
		02891	Planting						
				LC Landscape and Irrig.					(509) 758-5296
				Aqua Lawn					(509) 334-1745
				K&K Construction Supply- **DBE**					
		03000	Division 3 - Concrete						
		03100	Concrete Forms and Accessories						
		03200	Concrete Reinforcement						
				Harris Rebar (supply/install)		Boise	ID		509-547-2471
									509-220-3404
				Western Rebar (supply only)					509-487-2250
				Farwest					509-866-7999
				Tri-states		Auburn	WA		509-922-5901
				Western Coatings					253-735-1070
		03300	Cast-In-Place Concrete						
				Premix, Inc					509-872-2200
				Atlas Sand & Rock					509-332-7004
		03346	Concrete Floor Finishing						
		03390	Concrete Curing						
		03600	Non Shrink Grout						
		03930	Concrete Rehabilitation						

		04000	Division 4 - Masonry						
		04010	Maintenance of Masonry						
		04100	Mortar and Grout						
		04200	Reinforced Unit Masonry						
		04270	Glass Unit Masonry						
				Great Northern Masonry, Inc.					(509) 484-6877
				Spilker Masonry					(509) 489-7311
				R&R Masonry, Inc.					(509) 981-3874
		05000	Metals						
		05500	Metal Fabrications						
		06000	Divison 6 - Wood and Plastics						
		06100	Rough Carpentry						
		06160	Wood Sheathing						
		06175	Shop Fabricated Wood Trusses						
		07000	Division 7 - Thermal and Moisture Protection						
		07141	Cold Fluid-Applied Water proofing & Drainage Mat System						
		07191	Vertical Water Repellants						
		07210	Building Insulation						
		07214	Foamed-In-Place Masonry Wall Insulation						
		07275	Weather Barrier						
		07400	Metal Roof and Soffit Panels						
		07411	Metal Wall Panels						
		07461	Composite Trim						
		07620	Sheet Metal Flashing and Trim						
				ICON Roofing		Spokane	WA		805-458-0316
				Flynn BEC LP		Spokane	WA		509-455-4043

		07720	Snow Retention System						
		07920	Joint Sealants						
		08000	Division 8 - Doors and Windows						
		08110	Metal Doors and Frames						
		08710	Door Hardware						
		09000	Division 9 - Finishes						
		09900	High Performance Coatings						
		09910	Arhitectural Paints and Coatings						
				Extreme Coatings, Inc.					509-545-0570
				Moutain Dove Construction- **DBE**					
				Gary Hansen Painting Inc-**DBE**					
		10000	Division 10 - Specialties						
		10520	Fire Protection						
				AIR TECH	7820 FRANKLIN STREET	COEUR D'ALENE	ID	83814	208-772-6096
		11000	Divison 11 - Equipement						
		11000	General Requirments for Equipemtent						
		11103	Vertical Multistage Pump						
		11111	Horizontal End Suction Pump						
				R.C. Worst & Co.					208-664-2133
		15000	Division 15 - Mechanical						
		15060	Pipe and Pipe Fittings						
		15100	Valves						
				Core and Main					509-893-1055
				HD Fowler					208-772-9060
				Contech					509-496-7424
		16000	Division 16 Electrical						
				Strom Electric					208-835-2331
				BCL Electric		Moscow	ID		208-882-0136
				Gropp Heating and Electric LLC		Moscow	ID		208-882-7672
				Appollo Electric		Spokane	WA		509-467-8430
				Merit Electric		Spokane	WA		509-535-3930

				Power City Electric		Spokane	WA		509-535-4665
				Tork Electrical -**DBE**					(208) 290-2793
				Pacific Source Electrical-**DBE**					
				Thorco Inc-**DBE**					
				Fuse Electric-**DBE**					

SAM.GOV

RAZZ CONSTRUCTION, INC.

Unique Entity ID	CAGE / NCAGE	Purpose of Registration
NLGCVMENKT35	**5A7N0**	**All Awards**
Registration Status	Expiration Date	
Active Registration	**Oct 25, 2022**	
Physical Address	Mailing Address	
4055 Hammer DR **Bellingham, Washington 98226-7665** **United States**	**4055 Hammer Drive** **Bellingham, Washington 98226-7665** **United States**	

Business Information

Doing Business as	Division Name	Division Number
(blank)	**(blank)**	**(blank)**
Congressional District	State / Country of Incorporation	URL
Washington 02	**Washington / United States**	**www.razzconstruction.com**

Registration Dates

Activation Date	Submission Date	Initial Registration Date
Oct 27, 2021	**Oct 25, 2021**	**Jan 2, 2009**

Entity Dates

Entity Start Date	Fiscal Year End Close Date
May 19, 2005	**Dec 31**

Immediate Owner

CAGE	Legal Business Name
(blank)	**(blank)**

Highest Level Owner

CAGE	Legal Business Name
(blank)	**(blank)**

Executive Compensation

Registrants in the System for Award Management (SAM) respond to the Executive Compensation questions in accordance with Section 6202 of P.L. 110-252, amending the Federal Funding Accountability and Transparency Act (P.L. 109-282). This information is not displayed in SAM. It is sent to USAspending.gov for display in association with an eligible award. Maintaining an active registration in SAM demonstrates the registrant responded to the questions.

Proceedings Questions

Registrants in the System for Award Management (SAM) respond to proceedings questions in accordance with FAR 52.209-7, FAR 52.209-9, or 2.C.F.R. 200 Appendix XII. Their responses are not displayed in SAM. They are sent to FAPIIS.gov for display as applicable. Maintaining an active registration in SAM demonstrates the registrant responded to the proceedings questions.

Exclusion Summary

Active Exclusions Records?

No

SAM Search Authorization

I authorize my entity's non-sensitive information to be displayed in SAM public search results:

Yes

Entity Types

Business Types

Entity Structure	Entity Type	Organization Factors
Corporate Entity (Not Tax Exempt)	**Business or Organization**	**Subchapter S Corporation**
Profit Structure		
For Profit Organization		

Socio-Economic Types

Check the registrant's Reps & Certs, if present, under FAR 52.212-3 or FAR 52.219-1 to determine if the entity is an SBA-certified HUBZone small business concern. Additional small business information may be found in the SBA's Dynamic Small Business Search if the entity completed the SBA supplemental pages during registration.

Financial Information

Accepts Credit Card Payments	Debt Subject To Offset
No	**No**

EFT Indicator	CAGE Code
0000	**5A7N0**

Points of Contact

Electronic Business

Janessa Murphy, Contract Admin.

4055 Hammer Drive
Bellingham, Washington 98226
United States

Government Business

Janessa Murphy, Contract Admin.

4055 Hammer Drive
Bellingham, Washington 98226
United States

Service Classifications

NAICS Codes

Primary	NAICS Codes	NAICS Title
Yes	**237310**	**Highway, Street, And Bridge Construction**
	237990	**Other Heavy And Civil Engineering Construction**

Disaster Response

Yes, this entity appears in the disaster response registry.

Yes, this entity require bonding to bid on contracts.

Bonding Levels	Dollars
Construction Aggregate	**$10,000,000.00**
Construction Per Contract	**$6,000,000.00**

States	Counties	Metropolitan Statistical Areas
Idaho	**(blank)**	**(blank)**
Montana		
Washington		

SAM.GOV

MCCLURE AND SONS INC.

Unique Entity ID	CAGE / NCAGE	Purpose of Registration
Y66MVNWCY127	**0T054**	**All Awards**
Registration Status	Expiration Date	
Active Registration	**Jan 4, 2023**	
Physical Address	Mailing Address	
15714 Country Club DR **Mill Creek, Washington 98012-1737** **United States**	**15714 Country Club Drive** **Mill Creek, Washington 98012-1279** **United States**	

Business Information

Doing Business as	Division Name	Division Number
(blank)	**(blank)**	**(blank)**
Congressional District	State / Country of Incorporation	URL
Washington 01	**Washington / United States**	**(blank)**

Registration Dates

Activation Date	Submission Date	Initial Registration Date
Jan 6, 2022	**Jan 4, 2022**	**Dec 28, 2001**

Entity Dates

Entity Start Date	Fiscal Year End Close Date
Jun 15, 1990	**Dec 31**

Immediate Owner

CAGE	Legal Business Name
(blank)	**(blank)**

Highest Level Owner

CAGE	Legal Business Name
(blank)	**(blank)**

Executive Compensation

Registrants in the System for Award Management (SAM) respond to the Executive Compensation questions in accordance with Section 6202 of P.L. 110-252, amending the Federal Funding Accountability and Transparency Act (P.L. 109-282). This information is not displayed in SAM. It is sent to USAspending.gov for display in association with an eligible award. Maintaining an active registration in SAM demonstrates the registrant responded to the questions.

Proceedings Questions

Registrants in the System for Award Management (SAM) respond to proceedings questions in accordance with FAR 52.209-7, FAR 52.209-9, or 2.C.F.R. 200 Appendix XII. Their responses are not displayed in SAM. They are sent to FAPIIS.gov for display as applicable. Maintaining an active registration in SAM demonstrates the registrant responded to the proceedings questions.

Exclusion Summary

Active Exclusions Records?

No

SAM Search Authorization

I authorize my entity's non-sensitive information to be displayed in SAM public search results:

Yes

Entity Types

Business Types

Entity Structure	Entity Type	Organization Factors
Corporate Entity (Not Tax Exempt)	**Business or Organization**	**Subchapter S Corporation**
Profit Structure		
For Profit Organization		

Socio-Economic Types

Check the registrant's Reps & Certs, if present, under FAR 52.212-3 or FAR 52.219-1 to determine if the entity is an SBA-certified HUBZone small business concern. Additional small business information may be found in the SBA's Dynamic Small Business Search if the entity completed the SBA supplemental pages during registration.

Financial Information

Accepts Credit Card Payments	Debt Subject To Offset
No	**No**

EFT Indicator	CAGE Code
0000	**0T054**

Points of Contact

Electronic Business

LES McClure

15714 Country Club Drive
Mill Creek, Washington 98012
United States

JUDY McClure

15714 Country Club Dirve
Mill Creek, Washington 98012
United States

Government Business

LES McClure

15714 Country Club Drive
Mill Creek, Washington 98012
United States

Les McClure

15714 Country Club Drive
Mill Creek, Washington 98012
United States

Past Performance

LES McClure

15714 Country Club Drive
Mill Creek, Washington 98012
United States

Judy McClure

15714 Country Club Drive
Mill Creek, Washington 98012
United States

Service Classifications

NAICS Codes

Primary	NAICS Codes	NAICS Title
Yes	**237110**	**Water And Sewer Line And Related Structures Construction**
	237990	**Other Heavy And Civil Engineering Construction**
	238120	**Structural Steel And Precast Concrete Contractors**

Disaster Response

Yes, this entity appears in the disaster response registry.

Yes, this entity require bonding to bid on contracts.

Bonding Levels	Dollars
Construction Aggregate	**$100,000,000.00**
Construction Per Contract	**$40,000,000.00**

States	Counties	Metropolitan Statistical Areas
Oregon	**(blank)**	**(blank)**
Washington		

CITY COUNCIL STAFF REPORT

DATE: Monday, May 2, 2022

AGENDA ITEM TITLE

Sixth Street Crossing Over Paradise Creek - Bid Results - Scott Bontrager

RESPONSIBLE STAFF	REVIEWED BY
Scott Bontrager, City Engineer	This was reviewed by the Public Works/Finance Committee on April 25, 2022 and recommended for approval.

ADDITIONAL PRESENTER(S)	OTHER RESOURCES

DESCRIPTION

The Sixth Street Crossing Over Paradise Creek project includes the demolition and removal of the existing
culvert system, relocation of the water mains, and the construction of a new 24ft single-span multi-modal bridge that includes sidewalks, bike lanes, and will be elevated to reduce future flooding in the area. The City published an advertisement for bids on February 26, 2022 and the Engineer's Estimate for construction is $1,189,538.50.

Bid opening for the project took place on April 15, 2022, at which one (1) bid was received. The responsive bid received was submitted by Razz Construction with a bid of $1,997,216.00. A bid analysis is included in the Committee packet.

STAFF RECOMMENDATION

Accept the low bid from Razz Construction, Inc., award the contract for $1,997,216.00, and authorize staff approval of construction change orders in an amount not to exceed 10% of the contract amount.

PROPOSED ACTIONS

ACTION: Accept the low bid from Razz Construction, Inc., award the contract for $1,997,216.00, and authorize staff approval of construction change orders in an amount not to exceed 10% of the contract amount.

FISCAL IMPACT

Funds for the Sixth Street Crossing Over Paradise Creek project would be expended from the Water Improvements 320-220-770-73 and the Streets Roadway Improvement Program 350-150-770-83. Expenditure of $1,997,216.00 plus an additional 10% allocated for possible change orders to fund contract with Razz Construction, Inc. for the construction of the project.

PERSONNEL IMPACT

City staff will administer the construction contract and inspection.

ATTACHMENTS

1. Sixth Street Crossing Over Paradise Creek - Bid Review
2. Sixth Street Bridge Over Paradise Creek ConstructionAgreement_final

April 21, 2022

Scott Bontrager
City of Moscow, Idaho
206 E Third Street
Moscow, ID 83843

RE: SIXTH STREET CROSSING OVER PARADISE CREEK – BID REVIEW

Dear Scott:

On April 15, 2022, the City of Moscow received one bid for the Sixth Street Crossing Over Paradise Creek project. The apparent low bid was submitted by Razz Construction, Inc. with a total Bid price of $1,997,216.00. For comparison, the Engineer's Opinion of Probable Cost for the project is $1,189,538.50 with contingency. A summary of the bids is included below:

Bidder	Base Bid Total
Razz Construction, Inc.	$1,997,216.00

We focused our review on the base bid cost and the contents of the bid packets to ensure that the required information was present. The required information was outlined in the Advertisement to Bid, Bidder's Checklists, Instructions to Bidders, and Bid Form, which were all provided in Volume I of the Contract Documents. We have reviewed the bids to determine general compliance with the administrative requirements of the bidding phase (i.e., whether each bid received was responsive) based on the following:

- Bid received on time in a properly sealed envelope.
- Addenda properly acknowledged.
- Bid Form was completed in general conformance with the Instructions to Bidders.
- Bid Security signed and included.
- Bidder's Idaho Contractor License number included.
- Bid signed.
- Statutory Naming of Subcontractors Form completed (Plumbing, Electrical, HVAC are listed).
- Non-Collusion, and Anti-Discrimination completed.

Our review did not include the following:

- Verification of the Bidder's business legal status,

- The signatory's authority to sign, and
- Other possible legal reasons for considering the bids unresponsive.

The bid documents for the lowest bid, from Razz Construction, Inc., appear to be complete and responsive.

J-U-B verified the status of the Idaho Public Works license for Razz Construction, Inc. We reviewed the license status on the Idaho Division of Building Safety (DBS) Public Works Contractor License Search (eTRAKiT) website on April 21, 2022 for all listed contractors and subcontractors.

We additionally looked up the bidder on the System for Award Management (SAM) website and confirmed they are Active and they have no active exclusions. The registration summary from the SAM website is attached.

Based on this evaluation, it is our opinion that Razz Construction, Inc. is the lowest responsive bidder, and we recommend that they be considered for award of the contract. Based on our review of the contract documents, and upon completion of further review and concurrence by City legal staff and funding agency, we recommend the City consider awarding the project to Razz Construction, Inc. for a total contract price of One Million Nine Hundred Ninety-Seven Thousand Two Hundred Sixteen Dollars ($1,997,216.00). A copy of the bid from Razz Construction, Inc. and the Bid Evaluation are enclosed for reference.

Please conduct any additional review deemed necessary and provide your authorization of Award and we will move forward with the preparation of the Notice of Award and Contract Documents for Razz Construction, Inc.

If you would like to discuss our review or have additional questions, please do not hesitate to contact me at (208) 746-9010.

Sincerely,

David Watkins, P.E.
Area Manager
J-U-B ENGINEERS, Inc.

Enclosures:
Bid Analysis (1 page)
Razz Bid (30 pages)
Razz SAM Printout (2 pages)

PROJECT: 6TH STREET BRIDGE OVER PARADISE CREEK
CLIENT: CITY OF MOSCOW
KEY #: N/A

DATE: 18-Apr-22
PREPARED BY: J-U-B ENGINEERS INC.
PROJECT #: 21-20-010

BID ITEM #	ITEM NO.	DESCRIPTION	QUANTITY	UNIT	PS&E ENGINEERS ESTIMATE UNIT PRICE	PS&E ENGINEERS ESTIMATE TOTAL COST	BID AMOUNT - RAZZ CONSTRUCTION UNIT PRICE	BID AMOUNT - RAZZ CONSTRUCTION TOTAL COST	BID MINUS ESTIMATE
		ROADWAY ITEMS							
1	201.4.1.A.1	CLEARING AND GRUBBING	0.14	AC	$ 15,000.00	$ 2,100.00	$ 60,000.00	$ 8,400.00	$ 6,300.00
2	201.4.1.C.1	REMOVAL OF OBSTRUCTIONS	1	LS	$ 10,000.00	$ 10,000.00	$ 10,000.00	$ 10,000.00	$ -
3	201.4.1.D.1	REMOVAL OF BITUMINOUS SURFACE	715	SY	$ 4.50	$ 3,217.50	$ 10.00	$ 7,150.00	$ 3,932.50
4	202.4.1.A.1	EXCAVATION	558	CY	$ 22.00	$ 12,276.00	$ 30.00	$ 16,740.00	$ 4,464.00
5	202.4.5.A.1	UNSUITABLE MATERIAL EXCAVATION	100	CY	$ 45.00	$ 4,500.00	$ 100.00	$ 10,000.00	$ 5,500.00
6	202.4.8.A.1	DUST ABATEMENT WATER	100	MG	$ 50.00	$ 5,000.00	$ 115.00	$ 11,500.00	$ 6,500.00
7	206.4.1.A.1	SEEDBED PREPARATION	0.05	AC	$ 3,800.00	$ 190.00	$ 53,000.00	$ 2,650.00	$ 2,460.00
8	206.4.1.B.1	SEEDING	0.05	AC	$ 1,800.00	$ 90.00	$ 22,300.00	$ 1,115.00	$ 1,025.00
9	206.4.1.C.1	MULCHING	0.05	AC	$ 5,000.00	$ 250.00	$ 22,300.00	$ 1,115.00	$ 865.00
10	206.4.1.H.3	LOOSE RIPRAP	220	CY	$ 150.00	$ 33,000.00	$ 79.00	$ 17,380.00	$ (15,620.00)
11	601.4.1.A.5	12" STORM DRAIN PIPE, CLASS C-900 PVC	157	LF	$ 75.00	$ 11,775.00	$ 133.00	$ 20,881.00	$ 9,106.00
12	602.4.1.A.1	STORM DRAIN MANHOLE - TYPE A	2	EA	$ 3,500.00	$ 7,000.00	$ 4,800.00	$ 9,600.00	$ 2,600.00
13	602.4.1.F.1	CATCH BASIN - TYPE I	2	EA	$ 3,000.00	$ 6,000.00	$ 2,800.00	$ 5,600.00	$ (400.00)
14	706.4.1.A.3	6 INCH VERTICAL CURB (NO GUTTER), TYPE "A"	143	LF	$ 40.00	$ 5,720.00	$ 72.00	$ 10,296.00	$ 4,576.00
15	706.4.1.A.5	STANDARD 6 INCH VERTICAL CURB AND GUTTER	314	LF	$ 42.00	$ 13,188.00	$ 78.00	$ 24,492.00	$ 11,304.00
16	706.4.1.E.1	CONCRETE SIDEWALKS, THICKNESS 5"	287	SY	$ 75.00	$ 21,525.00	$ 101.00	$ 28,987.00	$ 7,462.00
17	706.4.1.F.1	CONCRETE DRIVEWAY APPROACH (6" THICK)	25	SY	$ 85.00	$ 2,125.00	$ 200.00	$ 5,000.00	$ 2,875.00
18	802.4.1.B.1	CRUSHED AGGREGATE FOR BASE TYPE I	436	TON	$ 45.00	$ 19,620.00	$ 37.00	$ 16,132.00	$ (3,488.00)
19	802.4.1.B.2	CRUSHED AGGREGATE FOR BASE TYPE II	580	TON	$ 35.00	$ 20,300.00	$ 31.00	$ 17,980.00	$ (2,320.00)
20	806.4.1.B.1	DILUTED EMULSIFIED ASPHALT FOR TACK COAT	30	GAL	$ 50.00	$ 1,500.00	$ 19.00	$ 570.00	$ (930.00)
21	810.4.1.A.1	PLANT MIX PAVEMENT	225	TON	$ 130.00	$ 29,250.00	$ 205.00	$ 46,125.00	$ 16,875.00
22	1001.4.2.B.1	STABILIZED CONSTRUCTION ENTRANCE	2	EA	$ 3,500.00	$ 7,000.00	$ 2,500.00	$ 5,000.00	$ (2,000.00)
23	1003.4.1.A.1	STRAW BALES	100	LF	$ 3.25	$ 325.00	$ 10.00	$ 1,000.00	$ 675.00
24	1003.4.1.C.1	SILT FENCE	250	LF	$ 10.00	$ 2,500.00	$ 7.00	$ 1,750.00	$ (750.00)
25	1103.4.1.B.1	TRAFFIC CONTROL SIGNS, CLASS B	262	SF	$ 20.00	$ 5,240.00	$ 30.00	$ 7,860.00	$ 2,620.00
26	1103.4.1.C.1	TRAFFIC CONTROL BARRICADES, TYPE III	4	EA	$ 450.00	$ 1,800.00	$ 250.00	$ 1,000.00	$ (800.00)
27	1103.4.1.J.1	TRAFFIC CONTROL MAINTENANCE	120	MNHR	$ 50.00	$ 6,000.00	$ 72.00	$ 8,640.00	$ 2,640.00
28	2050.4.1.B.1	RIPRAP/EROSION CONTROL GEOTEXTILE	192	SY	$ 7.50	$ 1,440.00	$ 6.00	$ 1,152.00	$ (288.00)
29	2050.4.1.C.1	SUBGRADE SEPARATION GEOTEXTILE	1397	SY	$ 4.00	$ 5,588.00	$ 3.00	$ 4,191.00	$ (1,397.00)
30	SP-3001	CONTRACTOR FURNISHED CONSTRUCTION SURVEYING AND STAKING	1	LS	$ 15,000.00	$ 15,000.00	$ 20,000.00	$ 20,000.00	$ 5,000.00
					SUBTOTAL ROADWAY ITEMS	**$ 253,519.50**		**$ 322,306.00**	**$ 68,786.50**
		WATERLINE ITEMS							
31	201.4.1.E.1	REMOVAL OF EXISTING WATER MAIN - SIZE 8"	384	LF	$ 25.00	$ 9,600.00	$ 35.00	$ 13,440.00	$ 3,840.00
32	201.4.1.E.3	REMOVAL OF EXISTING WATER MAIN - SIZE 24"	163	LF	$ 60.00	$ 9,780.00	$ 63.00	$ 10,269.00	$ 489.00
33	201.4.1.F.3	REMOVAL OF EXISTING HYDRANT	3	EA	$ 2,500.00	$ 7,500.00	$ 1,200.00	$ 3,600.00	$ (3,900.00)
34	307.4.1.A.7	MISC. SURFACE RESTORATION (NATURAL GROUND)	443	LF	$ 8.00	$ 3,544.00	$ 7.00	$ 3,101.00	$ (443.00)
35	308.4.1.C.1	STEEL CASING SLEEVE - SIZE 18" (0.375" THICK)	20	LF	$ 150.00	$ 3,000.00	$ 300.00	$ 6,000.00	$ 3,000.00
36	308.4.1.C.3	STEEL CASING SLEEVE - SIZE 36" (0.375" THICK)	40	LF	$ 250.00	$ 10,000.00	$ 500.00	$ 20,000.00	$ 10,000.00
37	401.4.1.A.1	WATER MAIN PIPE - SIZE 10" - TYPE C900, CLASS 235 PVC (DR18)	384	LF	$ 60.00	$ 23,040.00	$ 230.00	$ 88,320.00	$ 65,280.00
38	401.4.1.A.3	WATER MAIN PIPE - SIZE 24" - TYPE C900, CLASS 235 PVC (DR18)	179	LF	$ 185.00	$ 33,115.00	$ 580.00	$ 103,820.00	$ 70,705.00
39	401.4.1.C.1	CONNECT TO EXISTING WATER MAIN	4	EA	$ 1,600.00	$ 6,400.00	$ 4,700.00	$ 18,800.00	$ 12,400.00
40	402.4.1.A.1	GATE VALVE - SIZE 10"	3	EA	$ 4,500.00	$ 13,500.00	$ 3,600.00	$ 10,800.00	$ (2,700.00)
41	403.4.1.A.1	HYDRANT	2	EA	$ 6,200.00	$ 12,400.00	$ 12,000.00	$ 24,000.00	$ 11,600.00
42	SP-3004	AIR RELEASE VALVE ASSEMBLY	3	EA	$ 3,500.00	$ 10,500.00	$ 6,100.00	$ 18,300.00	$ 7,800.00
					SUBTOTAL WATERLINE ITEMS	**$ 142,379.00**		**$ 320,450.00**	**$ 178,071.00**
		BRIDGE ITEMS							
43	201.4.1.F.1	REMOVAL OF CULVERTS	3	EA	$ 8,000.00	$ 24,000.00	$ 500.00	$ 1,500.00	$ (22,500.00)
44	202.4.6.A.1	BORROW	150	CY	$ 28.00	$ 4,200.00	$ 55.00	$ 8,250.00	$ 4,050.00
45	204.4.1.A.1	STRUCTURAL EXCAVATION SCHEDULE 1	400	CY	$ 25.00	$ 10,000.00	$ 110.00	$ 44,000.00	$ 34,000.00
46	204.4.3.A.1	COMPACTING BACKFILL	350	CY	$ 50.00	$ 17,500.00	$ 26.00	$ 9,100.00	$ (8,400.00)
47	205.4.1.B.1	DEWATERING	1	LS	$ 50,000.00	$ 50,000.00	$ 50,000.00	$ 50,000.00	$ -
48	702.4.2.A.1	REINFORCING STEEL	42480	LB	$ 1.75	$ 74,340.00	$ 3.25	$ 138,060.00	$ 63,720.00
49	703.4.1.A.1	CONCRETE (CAST-IN-PLACE) - CLASS 4000A	83	CY	$ 900.00	$ 74,700.00	$ 800.00	$ 66,400.00	$ (8,300.00)
50	704.4.1.A.3	BRIDGE - 24' SPAN X 11' RISE	1	LS	$ 250,000.00	$ 250,000.00	$ 467,500.00	$ 467,500.00	$ 217,500.00
51	SP-3002	HELICAL PULLDOWN MICROPILE (HPM)	79	EA	$ 2,100.00	$ 165,900.00	$ 4,350.00	$ 343,650.00	$ 177,750.00
52	SP-3003	PEDESTRIAN/BICYCLE AND TRAFFIC RAILING	135	LF	$ 200.00	$ 27,000.00	$ 200.00	$ 27,000.00	$ -
					SUBTOTAL BRIDGE ITEMS	**$ 697,640.00**		**$ 1,155,460.00**	**$ 457,820.00**
53	2010.4.1.A.1	MOBILIZATION	1	LS	$ -	$ 96,000.00	$ 199,000.00	$ 199,000.00	$ 103,000.00
					Total:	**$ 1,189,538.50**		**$ 1,997,216.00**	**$ 807,677.50**

>$10K DIFFERENCE TOTAL= $ 794,134.00
NEGATIVE DIFFERENCE TOTAL = $ (74,236.00)

City of Moscow, Idaho
Latah County
Sixth Street Crossing Over Paradise Creek

BID FORM

Table of Contents

Page

Article 1 – Bid Recipient 1

Article 2 – Bidder's Acknowledgements 1

Article 3 – Bidder's Representations 1

Article 4 – Bidder's Certification 2

Article 5 – Basis of Bid 3

Article 6 – Time of Completion 5

Article 7 – Attachments to This Bid 6

Article 8 – Defined Terms 6

Article 9 – Bid Submittal 6

THIS PAGE WAS INTENTIONALLY LEFT BLANK

ARTICLE 1 – BID RECIPIENT

1.01 This Bid is submitted to:

City of Moscow Attn: Deputy City Clerk
504 South Washington Street
Moscow, Idaho 83843

1.02 The undersigned Bidder proposes and agrees, if this Bid is accepted, to enter into an Agreement with Owner in the form included in the Bidding Documents to perform all Work as specified or indicated in the Bidding Documents for the prices and within the times indicated in this Bid and in accordance with the other terms and conditions of the Bidding Documents.

ARTICLE 2 – BIDDER'S ACKNOWLEDGEMENTS

2.01 Bidder accepts all of the terms and conditions of the Invitation to Bid and Instructions to Bidders, including without limitation those dealing with the disposition of Bid security. This Bid will remain subject to acceptance for 60 days after the Bid opening, or for such longer period of time that Bidder may agree to in writing upon request of Owner.

ARTICLE 3 – BIDDER'S REPRESENTATIONS

3.01 In submitting this Bid, Bidder represents that:

A. Bidder has examined and carefully studied the Bidding Documents, other related data identified in the Bidding Documents, and the following Addenda, receipt of ~~all~~ which is hereby acknowledged:

Addendum No.	Addendum Date
1	3/14/22
2	3/16/22
3	3/21/22
4	4/04/22

B. Bidder has visited the Site and become familiar with and is satisfied as to the general, local, and Site conditions that may affect cost, progress, and performance of the Work.

C. Bidder is familiar with and is satisfied as to all Laws and Regulations that may affect cost, progress, and performance of the Work.

D. Bidder has carefully studied all: (1) reports of explorations and tests of subsurface conditions at or contiguous to the Site and all drawings of physical conditions relating to existing surface or subsurface structures at the Site (except Underground Facilities) that have been identified in SC-4.02 as containing reliable "technical data," and (2) reports and drawings of Hazardous Environmental Conditions, if any, at the Site that have been identified in SC-4.06 as containing reliable "technical data."

E. Bidder has considered the information known to Bidder; information commonly known to contractors doing business in the locality of the Site; information and observations obtained from visits to the Site; the Bidding Documents; and the Site-related reports and drawings identified in the Bidding Documents, with respect to the effect of such information, observations, and documents on (1) the cost, progress, and performance of the Work; (2) the means, methods, techniques, sequences, and procedures of construction to be employed by Bidder, including applying the specific means, methods, techniques, sequences, and procedures of construction expressly required by the Bidding Documents; and (3) Bidder's safety precautions and programs.

F. Bidder has obtained and carefully studied (or assumes responsibility for having done so) all additional or supplementary examinations, investigations, explorations, test, studies and data concerning conditions (surface, subsurface and Underground Facilities) at or contiguous to the Site which may affect cost, progress, or performance of the Work or which relate to any aspect of the means, methods, techniques, sequences, and procedures of construction to be employed by Bidder, including applying the specific means, methods, techniques, sequences, and procedures of construction expressly required by the Bidding Documents to be employed by Bidder safety precautions and programs incident thereto.

G. Based on the information and observations referred to in Paragraph 3.01.E above, Bidder does not consider that further examinations, investigations, explorations, tests, studies, or data are necessary for the determination of this Bid for performance of the Work at the price(s) bid and within the times required, and in accordance with the other terms and conditions of the Bidding Documents.

H. Bidder is aware of the general nature of work to be performed by Owner and others at the Site that relates to the Work as indicated in the Bidding Documents.

I. Bidder has given Engineer written notice of all conflicts, errors, ambiguities, or discrepancies that Bidder has discovered in the Bidding Documents, and the written resolution thereof by Engineer is acceptable to Bidder.

J. The Bidding Documents are generally sufficient to indicate and convey understanding of all terms and conditions for the performance of the Work for which this Bid is submitted.

ARTICLE 4 – BIDDER'S CERTIFICATION

4.01 Bidder certifies that:

A. This Bid is genuine and is not made in the interest of or on behalf of any undisclosed individual or entity and is not submitted in conformity with any collusive agreement or rules of any group, association, organization, or corporation;

B. Bidder has not directly or indirectly induced or solicited any other Bidder to submit a false or sham Bid;

C. Bidder has not solicited or induced any individual or entity to refrain from bidding; and

ADDENDUM No. 1

City of Moscow, ID, Sixth Street Crossing over Paradise Creek

March 14, 2022

Addendum No. 1 to the **Sixth Street Crossing over Paradise Creek** Bidding Documents prepared by J-U-B ENGINEERS, Inc. is hereby submitted for use in bid preparation and Submittal.

The following clarifications, corrections, or changes are hereby made as fully and completely as if the same were entirely set forth in the Bidding Documents and shall become an integral part of the contract entered into between Owner and Contractor for this project.

Questions

- Specification SP-3002 1.4A.4 and 5 reference DFI's guide to a micropile specification and the PTI. This project has helical piles detailed on the plan sheets and neither of these guides are applicable for helical piles as the DFI micropile specification guide was written for micropile specifications. Helical piles are not micropiles and there is a clear difference between the two foundation elements. The Post Tensioning Institute (PTI) guide was written for post-tensioned anchors such as tiebacks but also applies to micropiles but does not apply to helical piles especially when determining a skin friction. Both references were written for an anchor or pile that is drilled into the ground not twisted. A tieback or micropile is drilled down while all the of spoils are moved typically using air. Helical piles mix the grout in place with existing materials which results in a significantly reduced grout strength which will have a huge impact on the pile skin friction. Please update reference code materials or specify micropiles instead of helical piles.
    - References to DFI and PTI can be deleted.
- Is it acceptable to use micropiles in lieu of helical piles on this project?
    - Yes, although an alternate design would have to be stamped by an Idaho Licensed Engineer and submitted to the City/JUB for review and approval.
- Are the pile loads in compression or tension?
    - Piles will remain in compression.
- Plan Sheet S-102 details a maximum applied axial load of 72.1 kips. Is this the actual load that each pile should be designed for? Is this an LRFD or ASD load?
    - 72.1 kips is the demand. The required nominal strength is 150 kips per pile.
- What is the allowable deflection at design load? Typically, in the micropile industry this is limited to 0.5 inches at design load.
    - Use the design load as the nominal load, i.e. max 0.5-inch vertical deflection due to nominal load of 150 kips per pile.
- Please confirm there are no lateral loads in the piles.
    - There are lateral loads; however, once the culvert structure is in place, some of the loads will transmit through the top slab of the culvert into the fill material on the other side of the creek. The lateral load will be resisted by the battered piles. Lateral loads are relatively small.
- Is it allowable to perform the performance axial load test in tension as it is more conservative due to Poisson's ratio?
    - The compression load test is specified to replicate the load conditions that will be applied to the piles in service. Depending on the installation conditions, tension load testing may not accurately represent the performance of the HPMs.

- Does the helical pile design account for a steel section loss of 1/16" per International Building Code recommendation?
    - HPM components that are not completely encased in grout, are to have galvanized coating to protect against corrosion.
- Who is responsible for the design of the helical piles or micropiles?
    - The HPM design is included in the geotechnical deliverable. Any alternative designs would be provided by the Contractor.
- Who is responsible for piles which fail performance or proof tests?
    - The Contractor is responsible for failed piles.
- Is there any proof testing required for this project? Performance testing is used to verify the ultimate skin friction can be obtained and verified. Proof tests are used to ensure construction installation is consistent.
    - No proof tests are required. The specification requires 1 performance test in compression on a production HPM.
- Can the performance test be performed on a production pile or is it sacrificial?
    - If the performance test passes, the tested HPM can be used in production
- If it fails who is responsible for replacing this pile? Typically, it would be shown as sacrificial pile since it is to verify soil skin friction which is assumed and if it fails then it isn't in the location of a production pile.
    - The Contractor is responsible for a failed pile. The Contractor may elect to install a sacrificial pile if it suits their means and methods.
- Is the stream going to be running between the footings during installation?
    - Yes.
- Helical piles which use grout to flush spoils to surface typically results in grout coming back to the surface to verify the spoils are being cleared which in turn results in grout being all over the jobsite and a high probability of grout entering the body of water versus micropiles which can use multiple drilling fluids to evacuate and control the drill cuttings especially in sensitive environmental conditions. Is it allowable to have grout enter the body of water?
    - No, the Contractor is responsible for controlling their operation and not deposit grout or any other material in the creek.

NOTICE is hereby given that this Addendum must be signed and enclosed with a sealed bid for the Moscow Booster Station Replacements – Phase II, as evidence that the Bidder has familiarized himself/herself with all changes incorporated herein.

NAME OF BIDDER: Razz Construction Inc.

By: Donald A Rasmussen — Signature

3/22/22 — Date

Donald A. Rasmussen — Name

President — Title

Submitted by:

Digitally signed by Christopher Pettigrew
Date: 2022.03.14 09:23:36-06'00'

J-U-B ENGINEERS, Inc.
Christopher Pettigrew, P.E.

ADDENDUM No. 2

City of Moscow, ID, Sixth Street Crossing over Paradise Creek

March 16, 2022

Addendum No. 2 to the **Sixth Street Crossing over Paradise Creek** Bidding Documents prepared by J-U-B ENGINEERS, Inc. is hereby submitted for use in bid preparation and Submittal.

The following clarifications, corrections, or changes are hereby made as fully and completely as if the same were entirely set forth in the Bidding Documents and shall become an integral part of the contract entered into between Owner and Contractor for this project.

Bid and Contract Documents

Section 6 – Prevailing Wage (Davis Bacon Determination)

- Clarification: The HEAVY Davis-Bacon Wage Determination was updated on March 10, 2022.
- Correction: Replace existing Section 6 with attached Section 6 that includes the updated Determination.

Section 7 – City of Moscow Federally Funded Projects Davis Bacon Labor Standards

- Clarification: The HEAVY Davis-Bacon Wage Determination was updated on March 10, 2022.
- Correction: Replace existing Section 7 with attached Section 7 that includes the updated Determination.

Pre-Bid Meeting

The pre-bid meeting was held at 2:00pm on March 15, and the meeting minutes and sign-in sheet are attached to this addendum. The following questions were asked prior to the meeting or in the meeting and the answers are provided in red.

- The 24" jack and bore casing is really close to the R/W line, and the sending/receiving pits will go beyond the R/W line. Is this the design intent and how will this be handled during construction?
    - The Contractor is responsible for negotiating equipment access and/or staging areas with the landowner for the installation of the casing and waterline. The contract documents assume an open cut; however, the Contractor may use jack and bore if approved by the City and Engineer.

- How much water will be in Paradise Creek during construction?
    - Historical USGS gauge data of Paradise Creek near the University of Idaho shows mean monthly flows from 1978 to 2021 ranging from 22 cfs in March to 0.73 cfs in September. Actual flows may vary.

NOTICE is hereby given that this Addendum must be signed and enclosed with a sealed bid for the Moscow Booster Station Replacements – Phase II, as evidence that the Bidder has familiarized himself/herself with all changes incorporated herein.

NAME OF BIDDER: RAZZ Construction, Inc.

By: Donald A Rasmussen

Signature

3/17/22.

Date

Donald A. Rasmussen

Name

President

Title

Submitted by:

Digitally signed by Christopher Pettigrew
Date: 2022.03.16 14:58:48-06'00'

J-U-B ENGINEERS, Inc.

Christopher Pettigrew, P.E.

ADDENDUM No. 3

City of Moscow, ID, Sixth Street Crossing over Paradise Creek

March 21, 2022

Addendum No. 3 to the **Sixth Street Crossing over Paradise Creek** Bidding Documents prepared by J-U-B ENGINEERS, Inc. is hereby submitted for use in bid preparation and Submittal.

The following clarifications, corrections, or changes are hereby made as fully and completely as if the same were entirely set forth in the Bidding Documents and shall become an integral part of the contract entered into between Owner and Contractor for this project.

Bid and Contract Documents

Invitation To Bid

- Clarification: The bid date is being extended two weeks to provide time for CIP design.
- Correction: Replace existing bid date *"Tuesday, March 22, 2022"* with the following:
    - *"Tuesday, April 5, 2022"*

Agreement

- Clarification: The substantial completion date is being extended to allow for longer lead times on materials.
- Correction: Replace existing substantial completion date *"August 26, 2022"* with the following:
    - *"October 21, 2022"*

Pre-Bid Meeting

The pre-bid meeting was held at 2:00 pm on March 15, 2022, and the meeting minutes and sign-in sheet were not included in Addendum 02; they are included in this addendum.

Questions

- This is an aggressive design/approval/fabrication/delivery/construction for the precast industry in general, as such is the project construction completion schedule flexible? Could it extend 60 days minimum?
    - The substantial completion date is extended with this addendum.
- The skewed portions of the structure are severe and will require either the structure lengthen to allow for squared ends or the skew portions will require a CIP design. If the structure cannot be extended, could the bid date extend in order for a CIP design of the skewed segments to be provided to the bidders?
    - The structure cannot be lengthened, and the bid date is extended with this addendum.
- Are CIP headwalls an option in addition to the CIP skew pieces for uniformity purposes?
    - CIP headwalls are an option. Shop drawings and calculations for CIP elements will need to be submitted for review by the City and Engineer prior to construction.

NOTICE is hereby given that this Addendum must be signed and enclosed with a sealed bid for the Moscow Booster Station Replacements – Phase II, as evidence that the Bidder has familiarized himself/herself with all changes incorporated herein.

NAME OF BIDDER: RAZZ Construction Inc.

By: Donald A Rasmussen 3/21/22

Signature Date

Donald A. Rasmussen President.

Name Title

Submitted by:

Digitally signed by Christopher Pettigrew
Date: 2022.03.21 12:29:42-06'00'

J-U-B ENGINEERS, Inc.

Christopher Pettigrew, P.E.

ADDENDUM No. 4

City of Moscow, ID, Sixth Street Crossing over Paradise Creek

April 4, 2022

Addendum No. 4 to the **Sixth Street Crossing over Paradise Creek** Bidding Documents prepared by J-U-B ENGINEERS, Inc. is hereby submitted for use in bid preparation and Submittal.

The following clarifications, corrections, or changes are hereby made as fully and completely as if the same were entirely set forth in the Bidding Documents and shall become an integral part of the contract entered into between Owner and Contractor for this project.

Bid and Contract Documents

Invitation To Bid

- Clarification: The bid date is being extended to provide time for CIP design.
- Correction: Replace existing bid date *"Tuesday, April 5, 2022"* with the following:
  - *"Friday, April 15, 2022"*

Plans

- Example plans for the cast-in-place portions of the structure are included with this addendum for bidding purposes. Final plans and calculations specific to the Sixth Street Bridge will be submitted by the Contractor after award and before structure construction begins.

Questions

- N/A

NOTICE is hereby given that this Addendum must be signed and enclosed with a sealed bid for the Sixth Street Crossing over Paradise Creek, as evidence that the Bidder has familiarized himself/herself with all changes incorporated herein.

NAME OF BIDDER: RAZZ Construction, Inc

By: Donald A Rasmussen — Signature

4/15/22 — Date

Donald A. Rasmussen — Name

President — Title

Submitted by:

Christopher Pettigrew Digitally signed by Christopher Pettigrew Date: 2022.04.04 13:23:46-06'00'

J-U-B ENGINEERS, Inc.
Christopher Pettigrew, P.E.

D. Bidder has not engaged in corrupt, fraudulent, collusive, or coercive practices in competing for the Contract. For the purposes of this Paragraph 4.01.D:

1. "corrupt practice" means the offering, giving, receiving, or soliciting of anything of value likely to influence the action of a public official in the bidding process;

2. "fraudulent practice" means an intentional misrepresentation of facts made (a) to influence the bidding process to the detriment of Owner, (b) to establish bid prices at artificial non-competitive levels, or (c) to deprive Owner of the benefits of free and open competition;

3. "collusive practice" means a scheme or arrangement between two or more Bidders, with or without the knowledge of Owner, a purpose of which is to establish bid prices at artificial, non-competitive levels; and

4. "coercive practice" means harming or threatening to harm, directly or indirectly, persons or their property to influence their participation in the bidding process or affect the execution of the Contract.

ARTICLE 5 – BASIS OF BID

5.01 Bidder will complete the Work in accordance with the Contract Documents for the following price(s):

A. Bid prices listed shall include all applicable taxes and fees.

BASE BID – SIXTH STREET CROSSING OVER PARADISE CREEK

Item No.	Item Description	Estimated Quantity	Unit	Unit Price	Total Price
1	CLEARING AND GRUBBING	0.14	AC	$ 60,000.00	$ 8,400.00
2	REMOVAL OF OBSTRUCTIONS	1	LS	$ 10,000.00	$ 10,000.00
3	REMOVAL OF BITUMINOUS SURFACE	715	SY	$ 10.00	$ 7,150.00
4	EXCAVATION	558	CY	$ 30.00	$ 16,740.00
5	UNSUITABLE MATERIAL EXCAVATION	100	CY	$ 100.00	$ 10,000.00
6	DUST ABATEMENT WATER	100	MG	$ 115.00	$ 11,500.00
7	SEEDBED PREPARATION	0.05	AC	$ 53,000.00	$ 2,650.00
8	SEEDING	0.05	AC	$ 22,300.00	$ 1,115.00
9	MULCHING	0.05	AC	$ 22,300.00	$ 1,115.00
10	LOOSE RIPRAP	220	CY	$ 79.00	$ 17,380.00
11	12" STORM DRAIN PIPE, CLASS C-900 PVC	157	LF	$ 133.00	$ 20,881.00
12	STORM DRAIN MANHOLE - TYPE A	2	EA	$ 4,800.00	$ 9,600.00
13	CATCH BASIN - TYPE I	2	EA	$ 2,800.00	$ 5,600.00

14	6 INCH VERTICAL CURB (NO GUTTER), TYPE "A"	143	LF	$ 72.00	$ 10,296.00
15	STANDARD 6 INCH VERTICAL CURB AND GUTTER	314	LF	$ 78.00	$ 24,492.00
16	CONCRETE SIDEWALKS, THICKNESS 5"	287	SY	$ 101.00	$ 28,987.00
17	CONCRETE DRIVEWAY APPROACH (6" THICK)	25	SY	$ 200.00	$ 5,000.00
18	CRUSHED AGGREGATE FOR BASE TYPE I	436	TON	$ 37.00	$ 16,132.00
19	CRUSHED AGGREGATE FOR BASE TYPE II	580	TON	$ 31.00	$ 17,980.00
20	DILUTED EMULSIFIED ASPHALT FOR TACK COAT	30	GAL	$ 19.00	$ 570.00
21	PLANT MIX PAVEMENT	225	TON	$ 205.00	$ 46,125.00
22	STABILIZED CONSTRUCTION ENTRANCE	2	EA	$ 2,500.00	$ 5,000.00
23	STRAW BALES	100	LF	$ 10.00	$ 1,000.00
24	SILT FENCE	250	LF	$ 7.00	$ 1,750.00
25	TRAFFIC CONTROL SIGNS, CLASS B	262	SF	$ 30.00	$ 7,860.00
26	TRAFFIC CONTROL BARRICADES, TYPE III	4	EA	$ 250.00	$ 1,000.00
27	TRAFFIC CONTROL MAINTENANCE	120	MH	$ 72.00	$ 8,640.00
28	RIPRAP/EROSION CONTROL GEOTEXTILE	192	SY	$ 6.00	$ 1,152.00
29	SUBGRADE SEPARATION GEOTEXTILE	1397	SY	$ 3.00	$ 4,191.00
30	CONTRACTOR FURNISHED CONSTRUCTION SURVEYING AND STAKING	1	LS	$ 20,000.00	$ 20,000.00
31	REMOVAL OF EXISTING WATER MAIN - SIZE 8"	384	LF	$ 35.00	$ 13,440.00
32	REMOVAL OF EXISTING WATER MAIN - SIZE 24"	163	LF	$ 63.00	$ 10,269.00
33	REMOVAL OF EXISTING HYDRANT	3	EA	$ 1,200.00	$ 3,600.00
34	MISC. SURFACE RESTORATION (NATURAL GROUND)	443	LF	$ 7.00	$ 3,101.00
35	STEEL CASING SLEEVE - SIZE 18" (0.375" THICK)	20	LF	$ 300.00	$ 6,000.00

36	STEEL CASING SLEEVE - SIZE 36" (0.375" THICK)	40	LF	$ 500.00	$ 20,000.00
37	WATER MAIN PIPE - SIZE 10" - TYPE C900, CLASS 235 PVC (DR18)	384	LF	$ 230.00	$ 88,320.00
38	WATER MAIN PIPE - SIZE 24" - TYPE C900, CLASS 235 PVC (DR18)	179	LF	$ 580.00	$ 103,820.00
39	CONNECT TO EXISTING WATER MAIN	4	EA	$ 4,700.00	$ 18,800.00
40	GATE VALVE - SIZE 10"	3	EA	$ 3,600.00	$ 10,800.00
41	HYDRANT	2	EA	$ 12,000.00	$ 24,000.00
42	AIR RELEASE VALVE ASSEMBLY	3	EA	$ 6,100.00	$ 18,300.00
43	REMOVAL OF CULVERTS	3	EA	$ 500.00	$ 1,500.00
44	BORROW	150	CY	$ 55.00	$ 8,250.00
45	STRUCTURAL EXCAVATION SCHEDULE 1	400	CY	$ 110.00	$ 44,000.00
46	COMPACTING BACKFILL	350	CY	$ 26.00	$ 9,100.00
47	DEWATERING	1	LS	$ 50,000.00	$ 50,000.00
48	REINFORCING STEEL	42480	LB	$ 3.25	$ 138,060.00
49	CONCRETE (CAST-IN-PLACE) - CLASS 4000A	83	CY	$ 800.00	$ 66,400.00
50	BRIDGE - 24' SPAN X 11' RISE	1	LS	$ 467,500.00	$ 467,500.00
51	HELICAL PULLDOWN MICROPILE (HPM)	79	EA	$ 4,350.00	$ 343,650.00
52	PEDESTRIAN/BICYCLE AND TRAFFIC RAILING	135	LF	$ 200.00	$ 27,000.00
53	MOBILIZATION	1	LS	$ 199,000	$ 199,000.00

BASE BID TOTAL PRICE ONE MILLION NINE HUNDRED NINETY-SEVEN THOUSAND TWO HUNDRED SIXTEEN AND 00
(use words)

ARTICLE 6 – TIME OF COMPLETION

6.01 Bidder agrees that the Work will be substantially complete and will be completed and ready for final payment in accordance with Paragraph 14.07 of the General Conditions on or before the dates or within the number of calendar days indicated in the Agreement.

6.02 Bidder accepts the provisions of the Agreement as to liquidated damages.

6.03 Bidder agrees to comply with Idaho Code 44-1001 through 44-1005, regarding employment of Idaho residents.

ARTICLE 7 – ATTACHMENTS TO THIS BID

7.01 The following documents are submitted with and made a condition of this Bid:

A. Required Bid security in accordance with Article 8 of the Instructions to Bidders;

B. Not used;

C. Bidder shall include in his Bid the name, or names and address, or addresses, and Idaho Public Works Contractor License Numbers of the Subcontractors who shall, in the event the Bidder secures the Contract, subcontract the plumbing, heating and air-conditioning work, and electrical work under the general Contract;

D. Contractor's Non-Collusion Affidavit;

E. Anti-Discrimination Affidavit;

F. Bidder's State of Idaho Public Works Contractor's License No.: 005083.

G. U.S. Department of Commerce Economic Development Administration (EDA) Contracting Provisions for Construction Projects

H. EDA Site Sign Specification

I. Notice of Requirement for Affirmative Action to Ensure Equal Employment Opportunity

J. Form CD-215 Certification Regarding Lobbying Lower Tier Covered Transactions

ARTICLE 8 – DEFINED TERMS

8.01 The terms used in this Bid with initial capital letters have the meanings stated in the Instructions to Bidders, the General Conditions, and the Supplementary Conditions.

ARTICLE 9 – BID SUBMITTAL

9.01 This Bid is submitted by:

If Bidder is:

An Individual

Name (typed or printed): N/A

By: _____
(Individual's signature)

Doing business as: _____

A Partnership

Partnership Name: N/A

By: _____
(Signature of general partner -- attach evidence of authority to sign)

Name (typed or printed): _____

Date of Qualification to do business in Idaho is ____/____/____

A Corporation

Corporation Name: RAZZ Construction, Inc (SEAL)

RAZZ CONSTRUCTION INC CORPORATE SEAL 05/2005 WASHINGTON

State of Incorporation: Washinston

Type (General Business, Professional, Service, Limited Liability): General

By: Donald A Rasmussen
(Signature -- attach evidence of authority to sign) – see attached.

Name (typed or printed): Donald A. Rasmussen.

Title: President
(CORPORATE SEAL)

Attest Michelle Bites – Michelle Bites - Contract Administrator

Date of Qualification to do business in Idaho is 3 / 1 / 10.

A Joint Venture

Name of Joint Venture: N/A

First Joint Venturer Name: _____ (SEAL)

By: _____
(Signature of first joint venture partner -- attach evidence of authority to sign)

Name (typed or printed): _____

Title: _____

Date of Qualification to do business in Idaho is ____/____/____.

Second Joint Venturer Name: _____(SEAL)

By: _____
(Signature of second joint venture partner -- attach evidence of authority to sign)

Name (typed or printed): _____

Title: _____

Date of Qualification to do business in Idaho is ____/____/____.

(Each joint venturer must sign. The manner of signing for each individual, partnership, and corporation that is a party to the joint venture should be in the manner indicated above.)

Bidder's Business Address 4055 Hammer Drive
Bellingham, WA 98226.

Phone No. 360-752-0011 ext 102 Fax No. 360-752-0099.

E-mail donr@razzconstruction.com

SUBMITTED on 3/22, 2022.

Idaho Public Works Contractor License No. 005083.

Authority to Sign
Pg. 1 of 2

CORPORATE AUTHORIZATION RESOLUTION

Banner Bank

By: Razz Construction Inc
4055 Hammer Dr
Bellingham WA 98226

Referred to in this document as "Financial Institution"

Referred to in this document as "Corporation"

I, Donald Rasmussen, certify that I am Secretary (clerk) of the above named corporation organized under the laws of Washington, Federal Employer I.D. Number 20-2868525, engaged in business under the trade name of Razz Construction Inc, and that the resolutions on this document are a correct copy of the resolutions adopted at a meeting of the Board of Directors of the Corporation duly and properly called and held on _____ (date). These resolutions appear in the minutes of this meeting and have not been rescinded or modified.

AGENTS Any Agent listed below, subject to any written limitations, is authorized to exercise the powers granted as indicated below:

	Name and Title or Position	Signature	Facsimile Signature (if used)
A.	Donald Rasmussen	X Donald A. Rasmussen	N/A
B.	Karen Rasmussen	X Karen S. Rasmussen	X N/A
C.		X	X
D.		X	X
E.		X	X
F.		X	X

POWERS GRANTED (Attach one or more Agents to each power by placing the letter corresponding to their name in the area before each power. Following each power indicate the number of Agent signatures required to exercise the power.)

Indicate A, B, C, D, E, and/or F		Description of Power	Indicate number of signatures required
N/A	(1)	Exercise all of the powers listed in this resolution.	N/A
	(2)	Open any deposit or share account(s) in the name of the Corporation.	
	(3)	Endorse checks and orders for the payment of money or otherwise withdraw or transfer funds on deposit with this Financial Institution.	
N/A	(4)	Borrow money on behalf and in the name of the Corporation, sign, execute and deliver promissory notes or other evidences of indebtedness.	N/A
N/A	(5)	Endorse, assign, transfer, mortgage or pledge bills receivable, warehouse receipts, bills of lading, stocks, bonds, real estate or other property now owned or hereafter owned or acquired by the Corporation as security for sums borrowed, and to discount the same, unconditionally guarantee payment of all bills received, negotiated or discounted and to waive demand, presentment, protest, notice of protest and notice of non-payment.	N/A
N/A	(6)	Enter into a written lease for the purpose of renting, maintaining, accessing and terminating a Safe Deposit Box in this Financial Institution.	N/A
A	(7)	Other The Corporation designates this single agent as their Customer Administrator with full rights and authorities as described in Banner Bank's Online Cash Managment Agreement.	N/A

LIMITATIONS ON POWERS The following are the Corporation's express limitations on the powers granted under this resolution.

EFFECT ON PREVIOUS RESOLUTIONS This resolution supersedes resolution dated _____. If not completed, all resolutions remain in effect.

CERTIFICATION OF AUTHORITY
I further certify that the Board of Directors of the Corporation has, and at the time of adoption of this resolution had, full power and lawful authority to adopt the resolutions on page 2 and to confer the powers granted above to the persons named who have full power and lawful authority to exercise the same. (Apply seal below where appropriate.)

☐ If checked, the Corporation is a non-profit corporation.

In Witness Whereof, I have subscribed my name to this document and affixed the seal of the Corporation on October 13, 2010 (date).

Donald A Rasmussen — Attest by One Other Officer

Donald A Rasmussen — Secretary

Experts © 1985, 1997 Bankers Systems, Inc., St. Cloud, MN Form CA-1 5/1/2003

(page 1 of 2)

Construction Inc

Authority to sign
pg 2 of 2

Statement of Appointment- C.E.O. for RAZZ Construction, Inc.

On the date of Incorporation of RAZZ Construction, Inc., Donald A. Rasmussen was elected as Chief Executive Officer for the company. This appointment is detailed in the By-Laws of RAZZ Construction, Inc.

Signed: Donald A. Rasmussen
Donald A. Rasmussen- President

Date: May 19, 2005

4055 Hammer Drive Bellingham, WA 98226-7665
Ph: (360) 752-0011 Fx: (360) 752-0099 Email: donaldrazz@qwest.net

Brad Little
Governor

State of Idaho

Division of Building Safety

PUBLIC WORKS CONTRACTORS LICENSING

CONTRACTOR

005083 - UNLIMITED - 1- 2
License Number

03/01/2010
Original License Issued

This is to certify that

RAZZ CONSTRUCTION, INC.

has fulfilled the requirements of the law relating to licensing in Idaho Code, Title 54, Chapter 19 & 45 and is hereby granted this certificate.

This license expires: 03/31/2023

Licensee Signature

Ron Whitney, Administrator

Contractor's Non-Collusion Affidavit

State of Washington
) SS
County of Whatcom

Bid for Razz Construction, Inc, being first duly sworn, deposes, and says that he/she is President [sole owner, a partner, president, secretary, etc.] of, Razz Construction, Inc. [Bidder], the party making the foregoing Bid; that such Bid is not made in the interest of or on behalf of any undisclosed person, partnership, company, association, organization or corporation; that such Bid is genuine and not collusive or sham; that said Bidder has not directly or indirectly induced or solicited any other Bidder to put in a false or sham Bid and has not directly or indirectly colluded, conspired, connived or agreed with any Bidder or anyone else to put in a sham Bid, nor that anyone shall refrain from bidding; that said Bidder has not in any manner, directly or indirectly, sought by agreement, communication or conference with anyone to fix the Bid Price of said Bidder or of any other Bidder, nor to fix any overhead, profit or cost element of such Bid Price, nor of that of any other Bidder, nor to secure any advantage against the public body awarding the Contract or anyone interested in the proposed Contract; that all statements contained in such Bid are true; and, further, that said Bidder has not directly or indirectly submitted his Bid Price or any breakdown thereof, nor the contents thereof, nor divulged information or data relative thereto, nor paid and will not pay any fee in connection therewith to any corporation, partnership, company, association, organization, bid depository, nor to any member or agent thereof, nor to any other individual except to such person(s) as has/have a partnership or other financial interest with said Bidder in his general business.

Signed: Donald A. Rasmussen
Donald A. Rasmussen.

Title: President

Subscribed and sworn to before me this 22 day of March, 2022

YVETTE S MURPHY
MY COMM. EXP. 06/20/2023
NOTARY PUBLIC
COMM. NO. 34528
STATE OF WASHINGTON

(SEAL)

Notary Public Yvette S. Murphy
State of Washington
My Commission Expires 6/20/2023

THIS PAGE WAS INTENTIONALLY LEFT BLANK

Anti-Discrimination Affidavit

STATE OF WA ;

COUNTY OF Whatcom ;

The Bidder hereby covenants, stipulates and agrees that no person shall be discriminated against in the bidding of the services and/or materials herein under and that the Bidder shall not refuse to hire any person therefore because of such person's race, creed, sex, color, or national origin, unless based on a bona fide occupational qualification. Also, the Bidder will in no manner discriminate against any person because of such person's race, creed, sex, color, or national origin. Any such discrimination shall be deemed a violation of this Bid and shall render this Bid subject to forfeiture.

Donald A Rasmussen

Contractor's Signature Donald A. Rasmussen – President.

Subscribed and sworn to before me this 22 day of March, 2022.

Yvette S. Murphy

Notary Public

State of Washington

Residing at Bellingham, WA. 98226

My Commission Expires 6/20/2023

YVETTE S MURPHY
MY COMM. EXP. 06/20/2023
NOTARY PUBLIC
COMM. NO. 34528
STATE OF WASHINGTON

THIS PAGE WAS INTENTIONALLY LEFT BLANK

BID BOND

Any singular reference to Bidder, Surety, Owner or other party shall be considered plural where applicable.

BIDDER *(Name and Address)*:
Razz Construction, Inc.
4055 Hammer Drive
Bellingham, WA 98226

SURETY *(Name and Address of Principal Place of Business)*:
Old Republic Surety Company
P.O. BOX 1635,
MILWAUKEE, WI 53201

OWNER *(Name and Address)*:
City of Moscow
206 E Third Street
Moscow, ID 83843

BID
Bid Due Date: April 5, 2022
Description *(Project Name and Include Location)*: Sixth Street Crossing Over Paradise Creek

BOND
Bond Number: CSBA-20366
Date *(Not earlier than Bid due date)*:
Penal sum Five Percent of Amount Bid (Written in Words) $ 5% (Figures)

Surety and Bidder, intending to be legally bound hereby, subject to the terms set forth below, do each cause this Bid Bond to be duly executed by an authorized officer, agent, or representative.

Signed, Sealed and Dated: March 30, 2022

BIDDER	**SURETY**
Razz Construction, Inc. (Seal)	Old Republic Surety Company (Seal)
Bidder's Name and Corporate Seal	Surety's Name and Corporate Seal
By: Donald A Rasmussen	By:
Signature	Signature (Attach Power of Attorney)
Donald A. Rasmussen	Daniel Huckabay
Print Name	Print Name
President	Attorney-in-Fact
Title	Title
Attest: Michelle Butler	Attest:
Signature	Signature
Contract Administrator	
Title	Title

RAZZ CONSTRUCTION INC CORPORATE SEAL 05/2005 WASHINGTON

Note: Above addresses are to be used for giving any required notice. Provide execution by any additional parties, such as joint venturers, if necessary.

1. Bidder and Surety, jointly and severally, bind themselves, their heirs, executors, administrators, successors, and assigns to pay to Owner upon default of Bidder the penal sum set forth on the face of this Bond. Payment of the penal sum is the extent of Bidder's and Surety's liability. Recovery of such penal sum under the terms of this Bond shall be Owner's sole and exclusive remedy upon default of Bidder.

2. Default of Bidder shall occur upon the failure of Bidder to deliver within the time required by the Bidding Documents (or any extension thereof agreed to in writing by Owner) the executed Agreement required by the Bidding Documents and any performance and payment bonds required by the Bidding Documents.

3. This obligation shall be null and void if:

3.1 Owner accepts Bidder's Bid and Bidder delivers within the time required by the Bidding Documents (or any extension thereof agreed to in writing by Owner) the executed Agreement required by the Bidding Documents and any performance and payment bonds required by the Bidding Documents, or

3.2 All Bids are rejected by Owner, or

3.3 Owner fails to issue a Notice of Award to Bidder within the time specified in the Bidding Documents (or any extension thereof agreed to in writing by Bidder and, if applicable, consented to by Surety when required by Paragraph 5 hereof).

4. Payment under this Bond will be due and payable upon default of Bidder and within 30 calendar days after receipt by Bidder and Surety of written notice of default from Owner, which notice will be given with reasonable promptness, identifying this Bond and the Project and including a statement of the amount due.

5. Surety waives notice of any and all defenses based on or arising out of any time extension to issue Notice of Award agreed to in writing by Owner and Bidder, provided that the total time for issuing Notice of Award including extensions shall not in the aggregate exceed 120 days from Bid due date without Surety's written consent.

6. No suit or action shall be commenced under this Bond prior to 30 calendar days after the notice of default required in Paragraph 4 above is received by Bidder and Surety and in no case later than one year after Bid due date.

7. Any suit or action under this Bond shall be commenced only in a court of competent jurisdiction located in the state in which the Project is located.

8. Notices required hereunder shall be in writing and sent to Bidder and Surety at their respective addresses shown on the face of this Bond. Such notices may be sent by personal delivery, commercial courier, or by United States Registered or Certified Mail, return receipt requested, postage pre-paid, and shall be deemed to be effective upon receipt by the party concerned.

9. Surety shall cause to be attached to this Bond a current and effective Power of Attorney evidencing the authority of the officer, agent, or representative who executed this Bond on behalf of Surety to execute, seal, and deliver such Bond and bind the Surety thereby.

10. This Bond is intended to conform to all applicable statutory requirements. Any applicable requirement of any applicable statute that has been omitted from this Bond shall be deemed to be included herein as if set forth at length. If any provision of this Bond conflicts with any applicable statute, then the provision of said statute shall govern and the remainder of this Bond that is not in conflict therewith shall continue in full force and effect.

11. The term "Bid" as used herein includes a Bid, offer, or proposal as applicable.

ACKNOWLEDGMENT

A notary public or other officer completing this certificate verifies only the identity of the individual who signed the document to which this certificate is attached, and not the truthfulness, accuracy, or validity of that document.

State of California
County of Orange)

On March 30th, 2022 before me, Melissa Ann Vaccaro, Notary Public
(insert name and title of the officer)

personally appeared Daniel Huckabay,
who proved to me on the basis of satisfactory evidence to be the person(s) whose name(s) is/are subscribed to the within instrument and acknowledged to me that he/she/they executed the same in his/her/their authorized capacity(ies), and that by his/her/their signature(s) on the instrument the person(s), or the entity upon behalf of which the person(s) acted, executed the instrument.

I certify under PENALTY OF PERJURY under the laws of the State of California that the foregoing paragraph is true and correct.

WITNESS my hand and official seal.

MELISSA ANN VACCARO
COMM. #2241394
Notary Public-California
ORANGE COUNTY
My Comm. Expires May 12, 2022
FRS3

Signature Melissa Ann Vaccaro (Seal)
Melissa Ann Vaccaro

OLD REPUBLIC SURETY COMPANY

Bond No. CSBA-20366

POWER OF ATTORNEY

KNOW ALL MEN BY THESE PRESENTS: That OLD REPUBLIC SURETY COMPANY, a Wisconsin stock insurance corporation, does make, constitute and appoint:

Daniel Huckabay, Arturo Ayala, Shaunna Rozelle Ostrom, Frank Morones,

Michael D. Stong, Ben Stong of Orange, CA

its true and lawful Attorney(s)-in-Fact, with full power and authority for and on behalf of the company as surety, to execute and deliver and affix the seal of the company thereto (if a seal is required), bonds, undertakings, recognizances or other written obligations in the nature thereof, ***(other than bail bonds, bank depository bonds, mortgage deficiency bonds, mortgage guaranty bonds, guarantees of installment paper and note guaranty bonds, self-insurance workers compensation bonds guaranteeing payment of benefits, asbestos abatement contract bonds, waste management bonds, hazardous waste remediation bonds or black lung bonds),*** as follows:

ALL WRITTEN INSTRUMENTS

and to bind OLD REPUBLIC SURETY COMPANY thereby, and all of the acts of said Attorneys-in-Fact, pursuant to these presents, are ratified and confirmed. This appointment is made under and by authority of the board of directors at a special meeting held on February 18, 1982.

This Power of Attorney is signed and sealed by facsimile under and by the authority of the following resolutions adopted by the board of directors of the OLD REPUBLIC SURETY COMPANY on February 18,1982.

RESOLVED that, the president, any vice-president or assistant vice president, in conjunction with the secretary or any assistant secretary, may appoint attorneys-in-fact or agents with authority as defined or limited in the instrument evidencing the appointment in each case, for and on behalf of the company to execute and deliver and affix the seal of the company to bonds, undertakings, recognizances, and suretyship obligations of all kinds; and said officers may remove any such attorney-in-fact or agent and revoke any Power of Attorney previously granted to such person.

RESOLVED FURTHER, that any bond, undertaking, recognizance, or suretyship obligation shall be valid and binding upon the Company

(i) when signed by the president, any vice president or assistant vice president, and attested and sealed (if a seal be required) by any secretary or assistant secretary; or

(ii) when signed by the president, any vice president or assistant vice president, secretary or assistant secretary, and countersigned and sealed (if a seal be required) by a duly authorized attorney-in-fact or agent; or

(iii) when duly executed and sealed (if a seal be required) by one or more attorneys-in-fact or agents pursuant to and within the limits of the authority evidenced by the Power of Attorney issued by the company to such person or persons.

RESOLVED FURTHER that the signature of any authorized officer and the seal of the company may be affixed by facsimile to any Power of Attorney or certification thereof authorizing the execution and delivery of any bond, undertaking, recognizance, or other suretyship obligations of the company; and such signature and seal when so used shall have the same force and effect as though manually affixed.

IN WITNESS WHEREOF, OLD REPUBLIC SURETY COMPANY has caused these presents to be signed by its proper officer, and its corporate seal to be affixed this 13th day of May, 2020.

OLD REPUBLIC SURETY COMPANY CORPORATE SEAL 1981

Karen J. Haffner
Assistant Secretary

OLD REPUBLIC SURETY COMPANY

Alan Pavlic
President

STATE OF WISCONSIN, COUNTY OF WAUKESHA - SS

On this 13th day of May, 2020, personally came before me, Alan Pavlic and Karen J Haffner, to me known to be the individuals and officers of the OLD REPUBLIC SURETY COMPANY who executed the above instrument, and they each acknowledged the execution of the same, and being by me duly sworn, did severally depose and say: that they are the said officers of the corporation aforesaid, and that the seal affixed to the above instrument is the seal of the corporation, and that said corporate seal and their signatures as such officers were duly affixed and subscribed to the said instrument by the authority of the board of directors of said corporation.

KATHRYN R. PEARSON NOTARY PUBLIC STATE OF WISCONSIN

Kathryn R. Pearson
Notary Public

My Commission Expires: September 28, 2022

(Expiration of notary's commission does not invalidate this instrument)

CERTIFICATE

I, the undersigned, assistant secretary of the OLD REPUBLIC SURETY COMPANY, a Wisconsin corporation, CERTIFY that the foregoing and attached Power of Attorney remains in full force and has not been revoked; and furthermore, that the Resolutions of the board of directors set forth in the Power of Attorney, are now in force.

74 7242

OLD REPUBLIC SURETY COMPANY CORPORATE SEAL 1981

Signed and sealed at the City of Brookfield, WI this 30th day of March, 2022.

Karen J. Haffner
Assistant Secretary

ORSC 22262 (3-06)

CSBA

Naming of Subcontractors Form

Per Idaho Code, 67-2310, Bidder shall include in his or her Bid the names and address, and Idaho Public Works Contractor License Number of the Subcontractors who shall, in the event the Bidder secures the Contract, subcontract the plumbing, heating and air-conditioning work, and electrical work under the general Contract. Failure to name Subcontractors as required shall render any Bid submitted by the Bidder unresponsive and void.

Subcontractor Name and Address	Classification	License Number
NONE	PLUMBING	N/A
NONE	HVAC	N.A.
NONE	ELECTRICAL	N.A.

NOTES TO USER

1. This form must be included for all bids.

THIS PAGE WAS INTENTIONALLY LEFT BLANK

SAM.GOV

RAZZ CONSTRUCTION, INC.

Unique Entity ID	CAGE / NCAGE	Purpose of Registration
NLGCVMENKT35	**5A7N0**	**All Awards**
Registration Status	Expiration Date	
Active Registration	**Oct 25, 2022**	
Physical Address	Mailing Address	
4055 Hammer DR **Bellingham, Washington 98226-7665** **United States**	**4055 Hammer Drive** **Bellingham, Washington 98226-7665** **United States**	

Business Information

Doing Business as	Division Name	Division Number
(blank)	**(blank)**	**(blank)**
Congressional District	State / Country of Incorporation	URL
Washington 02	**Washington / United States**	**www.razzconstruction.com**

Registration Dates

Activation Date	Submission Date	Initial Registration Date
Oct 27, 2021	**Oct 25, 2021**	**Jan 2, 2009**

Entity Dates

Entity Start Date	Fiscal Year End Close Date
May 19, 2005	**Dec 31**

Immediate Owner

CAGE	Legal Business Name
(blank)	**(blank)**

Highest Level Owner

CAGE	Legal Business Name
(blank)	**(blank)**

Executive Compensation

Registrants in the System for Award Management (SAM) respond to the Executive Compensation questions in accordance with Section 6202 of P.L. 110-252, amending the Federal Funding Accountability and Transparency Act (P.L. 109-282). This information is not displayed in SAM. It is sent to USAspending.gov for display in association with an eligible award. Maintaining an active registration in SAM demonstrates the registrant responded to the questions.

Proceedings Questions

Registrants in the System for Award Management (SAM) respond to proceedings questions in accordance with FAR 52.209-7, FAR 52.209-9, or 2.C.F.R. 200 Appendix XII. Their responses are not displayed in SAM. They are sent to FAPIIS.gov for display as applicable. Maintaining an active registration in SAM demonstrates the registrant responded to the proceedings questions.

Exclusion Summary

Active Exclusions Records?

No

SAM Search Authorization

I authorize my entity's non-sensitive information to be displayed in SAM public search results:

Yes

Entity Types

Business Types

Entity Structure	Entity Type	Organization Factors
Corporate Entity (Not Tax Exempt)	**Business or Organization**	**Subchapter S Corporation**
Profit Structure		
For Profit Organization		

Socio-Economic Types

Check the registrant's Reps & Certs, if present, under FAR 52.212-3 or FAR 52.219-1 to determine if the entity is an SBA-certified HUBZone small business concern. Additional small business information may be found in the SBA's Dynamic Small Business Search if the entity completed the SBA supplemental pages during registration.

Financial Information

Accepts Credit Card Payments	Debt Subject To Offset
No	**No**

EFT Indicator	CAGE Code
0000	**5A7N0**

Points of Contact

Electronic Business

Janessa Murphy, Contract Admin.

4055 Hammer Drive
Bellingham, Washington 98226
United States

Government Business

Janessa Murphy, Contract Admin.

4055 Hammer Drive
Bellingham, Washington 98226
United States

Service Classifications

NAICS Codes

Primary	NAICS Codes	NAICS Title
Yes	**237310**	**Highway, Street, And Bridge Construction**
	237990	**Other Heavy And Civil Engineering Construction**

Disaster Response

Yes, this entity appears in the disaster response registry.

Yes, this entity require bonding to bid on contracts.

Bonding Levels	Dollars
Construction Aggregate	**$10,000,000.00**
Construction Per Contract	**$6,000,000.00**

States	Counties	Metropolitan Statistical Areas
Idaho	**(blank)**	**(blank)**
Montana		
Washington		

CONSTRUCTION AGREEMENT
FOR SIXTH STREET CROSSING OVER PARADISE CREEK
BETWEEN CITY OF MOSCOW, IDAHO
AND RAZZ CONSTRUCTION

THIS CONSTRUCTION AGREEMENT FOR **SIXTH STREET CROSSING OVER PARADISE CREEK** BETWEEN CITY OF MOSCOW, IDAHO, AND RAZZ CONSTRUCTION INC(hereinafter "Agreement"), dated this ____ day of _____, 2022, by and between City of Moscow, Idaho, a municipal corporation of the State of Idaho, 206 East Third Street, Moscow, Idaho, 83843 (hereinafter "CITY"), and Razz Construction Inc, a Washington Business Corporation, 4055 Hammer Drive Bellingham, Washington 98226 (hereinafter "CONTRACTOR"):

W I T N E S S E T H :

WHEREAS, pursuant to the invitation of CITY, extended through an "Invitation to Bid" see Attachment 'A', CONTRACTOR submitted a Bid Proposal containing an offer invited by said invitation; and

WHEREAS, CITY has determined that said offer was the lowest responsive Bid Proposal; and

WHEREAS, CITY has accepted CONTRACTOR's Bid Proposal;

NOW THEREFORE, the Parties to this Agreement, in consideration of the mutual covenants and stipulations set out, agree as follows:

ARTICLE 1.
CONTRACT DOCUMENTS

The Contract Documents which comprise the entire Agreement between CITY and CONTRACTOR concerning the work to be performed, are this Agreement, pages one (1) through six (6), and the following:

1. Drawings, Specifications and Proposal, Attachment 'A' for: Sixth Street Bridge Over Paradise Creek**,** consisting of 30 Pages;
2. Bid Proposal of CONTRACTOR, dated April 15, 2022, see Attachment 'B', consisting of 512 Pages ;
3. Performance and Payment Bonds and Insurance Certificates;
4. Addenda, if applicable, Attachment 'C', consisting of 98 Pages; and
5. Change Orders, which may be delivered or issued after the effective date of this Agreement.

There are no Contract Documents other than those listed in Article 1. This Agreement may only be amended by change order as provided in the General Conditions of Attachment 'A'.

ARTICLE 2.
WORK

CONTRACTOR shall complete the entire work as specified, indicated and required under the Contract Documents, contained herein under Article 1. for CITY project (hereinafter "Project") titled:

Sixth Street Bridge Over Paradise Creek

ARTICLE 3.
CONTRACT TIME/SUBSTANTIAL COMPLETION

The work to be performed pursuant to this Agreement shall be substantially completed on or before October 21, 2022, unless adjustment of the Agreement time is made in accordance with the provisions of the Contract Documents. CONTRACTOR shall begin work in conformance with the Contract Documents.

CONTRACTOR and CITY recognize that time is of the essence and that CITY will suffer financial loss if the Project is not completed within the time specified above, unless approved extensions thereof are permitted in accordance with Article 12 of the General Conditions. The Parties also recognize the delays, expense, and difficulties involved in proving, in a legal or arbitration proceeding, the actual loss suffered by CITY if the Project is not completed on time. Accordingly, instead of requiring any such proof, CITY and CONTRACTOR agree that as liquidated damages for delay (but not as a penalty), CONTRACTOR shall pay CITY Two Thousand Five Hundred Dollars ($2,500) for each day that expires after the time specified above for Substantial Completion until the Project is substantially complete. After Substantial Completion, if CONTRACTOR shall neglect, refuse, or fail to complete the remaining Project within the Time of Completion or by any proper extension thereof granted by CITY, CONTRACTOR shall pay CITY Two Thousand Five Hundred Dollars ($2,500) of the Contract Sum for each day that expires after the time specified above for completion, until the Project is completed and ready for final payment.

ARTICLE 4.
CONTRACT SUM

CITY shall pay CONTRACTOR for completion of the Work in accordance with the Contract Documents in current funds in the amount of One Million Nine Hundred Ninety-Seven Thousand Two Hundred Sixteen ($1,997,216.00), as submitted by CONTRACTOR. In no event shall Contract amount exceed CONTRACTOR's bid amount of One Million Nine Hundred Ninety-Seven Thousand Two Hundred Sixteen ($1,997,216.00), unless otherwise authorized by CITY by written agreement. Said Contract Sum shall be paid in accordance with the Contract Documents.

ARTICLE 5.
INDEPENDENT CONTRACTOR

The Parties warrant by their signatures that no employer-employee relationship is established between CONTRACTOR and CITY by the terms of this Agreement. It is understood by the Parties hereto that CONTRACTOR is an independent contractor and, as such, neither CONTRACTOR

nor CONTRACTOR's employees, agents, representatives or subcontractors, if any, are employees of CITY for purposes of tax, retirement system, or social security (FICA) withholding.

ARTICLE 6.
SCOPE OF SERVICES

CONTRACTOR shall perform all work required by the Contract Documents. All work shall be completed in accordance with the specifications and plans established for this Project.

ARTICLE 7.
HOLD HARMLESS/INDEMNIFICATION

In addition to other rights granted CITY by the Contract Documents, CONTRACTOR agrees to indemnify, defend, and hold harmless CITY, its officers, agents, employees, and engineers, from and against any and all losses, lawsuits, actions, claims, judgements for damages, or any injuries or damages received or sustained by any person, persons, or property, and losses, expenses, and other costs, including litigation costs and attorney's fees, arising out of, resulting from, or in connection with the acts and/or any performances, activities, errors or omissions by CONTRACTOR, CONTRACTOR's servants, agents, officers, employees, representatives, guests, business invitees or its subcontractors; or on account of or in consequence of any neglect in safeguarding the work; or through use of unacceptable materials in constructing the work; or because of any claims or amounts recovered from any infringements of patent, trademark or copyright; or from any claims or amounts arising out of or recovered under the Workmen's Compensation Act or any other law, ordinance, order, or decree.

ARTICLE 8.
CONFLICT OF INTEREST

CONTRACTOR covenants that it presently has no interest and will not acquire any interest, direct or indirect, in the Project, which would conflict in any manner or degree with the performance of CONTRACTOR's services hereunder. CONTRACTOR further covenants that, in performing this Agreement, CONTRACTOR will employ no person who has any such interest. Should any conflict of interest arise during the performance of this Agreement, CONTRACTOR shall immediately disclose such conflict to the CITY.

ARTICLE 9.
ENTIRE AGREEMENT, MODIFICATION AND ASSIGNABILITY

This Agreement and the exhibits hereto contain the entire Agreement between the Parties, and no statements, promises, or inducements made by either Party, or agents of either Party are valid or binding unless contained herein. This Agreement may not be enlarged, modified or altered except upon written agreement signed by the Parties hereto. CONTRACTOR may not subcontract or assign its rights (including the right to compensation) or duties arising hereunder, other than as provided within the Contract Documents, without the prior written consent and express authorization of CITY.

ARTICLE 10.
LICENSES AND ADHERENCE TO LAW REQUIRED

CONTRACTOR represents that he possesses the skill and experience necessary and all licenses required to perform the services under this Agreement. CONTRACTOR further agrees to comply with all applicable Federal, State and Local statutes and regulations in the performance of the services hereunder, and are hereby made a part of this Agreement and shall be adhered to at all times. Violation of any of these statutes or regulations by CONTRACTOR shall be deemed material and shall subject CONTRACTOR to termination of this Agreement for cause. No pleas of misunderstanding or ignorance on the part of CONTRACTOR will, in any way, serve to modify the provisions of this requirement. CONTRACTOR and its surety shall indemnify, defend and hold harmless CITY and its employees, agents, engineers and representatives against any claim or liability arising from or based on the violation of any such laws, codes, ordinances, or regulations, whether by CONTRACTOR, CONTRACTOR's employees, or its subcontractors.

Anti-Boycott Against Israel Act. CONTRACTOR certifies it is not currently engaged in, and will not for the duration of the Agreement engage in, a boycott of goods and services from Israel or territories under its control. Failure to comply with I.C. 67-2346 will result in this Agreement being void as against public policy.

ARTICLE 11.
EMPLOYMENT DISCRIMINATION

It is illegal under the U.S. Federal law to discriminate against an employee, either intentionally or through disparate impact, on account of race, color, gender, religion, sex (including pregnancy), national origin, physical or mental disability, age, marital or familial status, sexual orientation, and gender expression or identity. CONTRACTOR shall not discriminate against any employee or applicant for employment. CONTRACTOR's action under this Section shall include, but not be limited to, the following: employment, upgrading, demotion or transfer, recruitment or recruitment advertising, layoff or termination, rates of pay or other forms of compensation and selection for training, including apprenticeship. CONTRACTOR agrees to post in conspicuous places, available to employees and other applicants for employment, notices setting forth the provisions of this non-discrimination Section.

ARTICLE 12.
LEGAL FEES

In the event either Party incurs legal expenses to enforce the terms and conditions of this Agreement, the prevailing Party is entitled to recover attorney's fees and other costs and expenses, whether the same are incurred with or without a lawsuit.

ARTICLE 13.
JURISDICTION, VENUE AND NONWAIVER

It is agreed that this Agreement shall be construed under and governed by the laws of the State of Idaho. In the event of litigation concerning it, it is agreed that proper venue shall be the District Court of the Second Judicial District of the State of Idaho, in and for the County of Latah. Failure

of CITY to exercise any of the rights under this Agreement, or breach thereof, shall not be deemed to be a waiver of such right or a waiver of any subsequent breach.

ARTICLE 14.
SPECIAL WARRANTY

CONTRACTOR warrants that nothing of monetary value has been given, promised or implied as remuneration or inducement to enter into this Agreement. CONTRACTOR declares that no improper personal, political or social activities have been used or attempted in an effort to influence the outcome of the competition, discussion, or negotiation leading to the award of this Agreement. Any such activity by CONTRACTOR shall make this Agreement null and void. CONTRACTOR further warrants that all materials and goods supplied under this Agreement shall be of good merchantable quality and that all services will be performed in a good workmanlike manner. CONTRACTOR acknowledges that it will be liable for any breach of this warranty.

ARTICLE 15.
COMMUNICATIONS

Such communications as are required by this Agreement shall be satisfied by mailing or by personal delivery to the Parties at the following address:

CONTRACTOR:

Razz Construction Inc
Authorized Agent
4055 Hammer Dr
Bellingham, WA 98226

CITY:

City of Moscow
Engineering
206 East Third Street
P O Box 9203
Moscow, Idaho 83843

ARTICLE 16.
NON-APPROPRIATIONS

This Agreement is contingent upon CITY receiving the necessary funding to cover the obligations of CITY. In the event that such funding is not received or appropriated, then, and in that event, CITY's obligations under this Agreement shall cease and each Party shall be released from further performance under this Agreement without any liability to the other Party, and CONTRACTOR shall be entitled to receive just and equitable compensation for any work satisfactorily completed hereunder.

ARTICLE 17.
APPROVAL REQUIRED AND SEVERABILITY

This Agreement shall not become effective or binding until approved by CITY. If any part of this Agreement is held unenforceable, the remaining portions of the Agreement will, nevertheless, remain in full force and effect.

ARTICLE 18.
EXECUTION

IN WITNESS WHEREOF, said CONTRACTOR and CITY have caused this Agreement to be executed on the day and year first above written.

CONTRACTOR:

Razz Construction

_____

By:

CITY:

City of Moscow, Idaho

_____

Arthur D. Bettge, Mayor

ATTEST:

_____

Laurie M. Hopkins, City Clerk

Approved as to Form:

_____

Mia Bautista, City Attorney

ACKNOWLEDGMENT

STATE OF _____)
) ss.
COUNTY OF _____)

On this _____ day of _____, 2022, before me, a Notary Public in and for said State, appeared _____, known to me to be the person named above and acknowledged that he/she executed the foregoing document as the duly authorized representative for Razz Construction Inc

_____
Notary Public for the State of _____
Residing at_____
My commission expires_____

CITY OF MOSCOW

SIXTH STREET CROSSING OVER PARADISE CREEK

FEBRUARY 2021

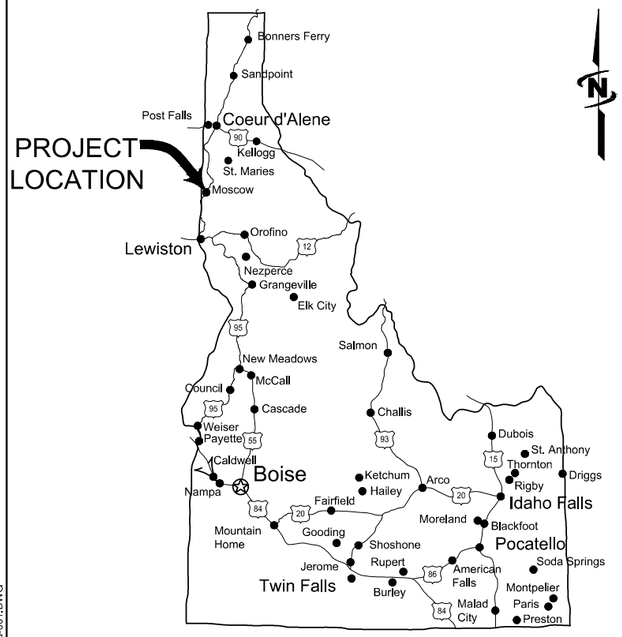

AREA MAP

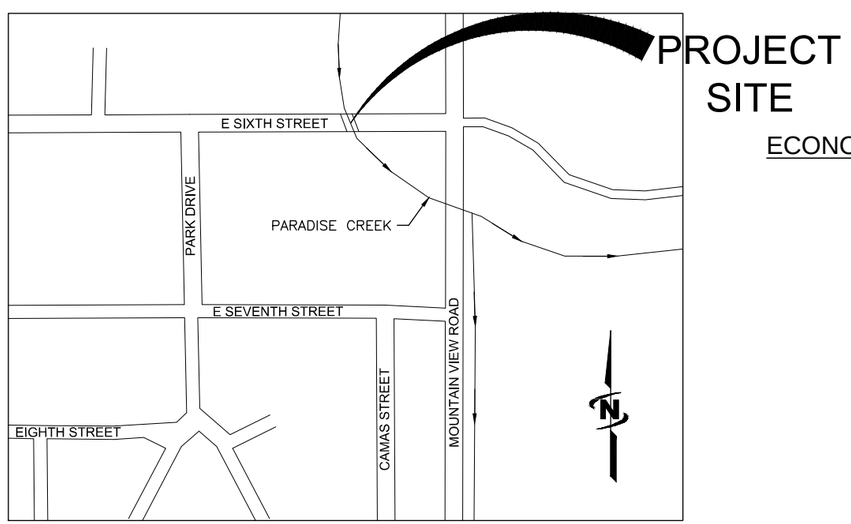

VICINITY MAP

100% PS&E SUBMITTAL

CITY OF MOSCOW
PROJECT NO. 126-020

ECONOMIC DEVELOPMENT ADMINISTRATION (EDA) NO. 07-79-07731

J-U-B PROJECT NO. 20-21-010

J-U-B ENGINEERS, INC.

201 South Jackson Street, Moscow, ID 83843
p 208 746 9010 *f* 844 830 2645 *w* www.jub.com

OTHER J-U-B COMPANIES THE LANGDON GROUP GATEWAY MAPPING INC.

INDEX OF SHEETS

Sheet Number	Sheet Title
GENERAL	
G–001	COVER SHEET
G–002	GENERAL NOTES
G–003	LEGEND
G–004	SYMBOLS
G–005	ROADWAY SUMMARY
SURVEY	
V–101	SURVEY CONTROL & VICINITY MAP
CIVIL	
C–001	TYPICAL SECTIONS
C–101	WATER MAIN PLAN & PROFILE
C–102	WATER MAIN PLAN & PROFILE
C–103	WATER MAIN DETAILS
C–201	PLAN & PROFILE
C–202	PLAN & PROFILE
C–301	ROADWAY DETAILS
C–302	DRAINAGE DETAILS
C–401	CHANNEL GRADING DETAILS
C–900	DETOUR PLAN
C–901	DETOUR PLAN
UTILITY	
C–1001	UTILITY PLAN
C–1002	UTILITY PLAN
STRUCTURAL	
S–101	SITUATION & LAYOUT
S–102	GENERAL NOTES & QUANTITIES
S–501	FOOTING LAYOUT AND MICROPILE DETAILS
S–502	WINGWALL LAYOUT AND GENERAL SECTIONS
S–503	FOOTING REINFORCEMENT DETAILS
S–504	COMB. PEDESTRIAN BICYCLE AND TRAFFIC RAIL LAYOUT & DETAILS

DESIGN DATA

ROADWAY: IN ACCORDANCE WITH LATEST AASHTO GREENBOOK, 2020 ISPWC SPECIFICATIONS AND LATEST CITY OF MOSCOW STANDARD CONSTRUCTION DRAWINGS
DESIGN SPEED - 20 MPH
ADT - 4000 (2017)
HORIZONTAL: MINIMUM RADIUS - 107' (NO SUPERELEVATION)
VERTICAL: MINIMUM K-VALUES - 7 (CREST), 17 (SAG)
STRUCTURE: IN ACCORDANCE WITH LATEST AASHTO LRFD BRIDGE DESIGN SPECIFICATIONS

REUSE OF DOCUMENTS

J-U-B grants to CLIENT a nonexclusive, non-transferable license to use the Drawings, Specifications and/or Contract Documents (Documents) as follows:

CLIENT may make and retain copies of the Documents for reference, but J-U-B shall retain all common law, statutory and other reserved rights, including the copyright thereto, and the same shall not be reused on this Project or any other Project without J-U-B's prior written consent. Distribution of Documents to meet regulatory or permitting requirements, or for similar purposes, in connection with the Project, including but not limited to distribution to contractors or subcontractors for the performance of their work, is not to be construed as publication adversely affecting the reserved rights of J-U-B. The Documents are not intended for use in creating dtm for grading or earthwork, survey staking layout (unless specifically identified as such in the documents), or property boundary layouts.

Any reuse without written consent by J-U-B, or without verification or adoption by J-U-B for the specific purpose intended by the reuse, will be at CLIENT's sole risk and without liability or legal exposure to J-U-B. The CLIENT shall release, defend, indemnify, and hold J-U-B harmless from any claims, damages, actions or causes of action, losses, and expenses, including reasonable attorneys' and expert fees, arising out of or resulting from such reuse.

If the Documents are provided in electronic format, the electronic documents are subject to the provisions of J-U-B's "electronic document/data limited license" found at edocs.jub.com.

LAST UPDATED: 2/18/2021
SHEET NUMBER:
G-001

Attachment A
Plot Date:2/19/2021 \\JUB.COM\CENTRAL\CLIENTS\ID\MOSCOW\CITY\PROJECTS\21-20-010_SIXTHSTREETCROSSINGOVERPARADISECREEK\DESIGN\CAD\SHEET\21-20-010_G-001.DWG

GENERAL NOTES

1. CITY OF MOSCOW AND THE ENGINEER HAVE JURISDICTION OVER THIS PROJECT. CONTRACTOR SHALL OBTAIN ALL NECESSARY PERMITS AND BUSINESS LICENSES PRIOR TO CONSTRUCTION.

2. CONTRACTOR IS RESPONSIBLE FOR DUST ABATEMENT AND ANY LIABILITY ISSUES RELATED TO DUST AT ANY LOCATION WHICH MAY BE CAUSED BY THIS PROJECT.

3. THE CONTRACTOR IS RESPONSIBLE FOR TRAFFIC CONTROL AND PROTECTION OF PEDESTRIANS IN AND AROUND THIS WORK. REFERENCE THE MANUAL ON UNIFORM TRAFFIC CONTROL DEVICES (MUTCD LATEST EDITION FOR WORK ZONE TRAFFIC CONTROL).

4. ANY WORK DONE WITHIN A PUBLIC RIGHT–OF–WAY SHALL BE COORDINATED WITH THE APPROPRIATE TRANSPORTATION AGENCY AND SHALL MEET THE REQUIREMENTS OF THAT AGENCY AND, IN PARTICULAR, REQUIREMENTS OF ANY RIGHT–OF–WAY SPECIAL USE PERMIT, OR OTHER PERMIT. ALL WORK SHALL MEET CURRENT OSHA REQUIREMENTS.

5. WHERE WORK IS PERFORMED ON EASEMENTS, THE CONTRACTOR SHALL TAKE EVERY PRECAUTION TO ELIMINATE ANY ADVERSE EFFECTS ON THE ADJACENT PROPERTY AND/OR TO RESTORE IT TO ITS ORIGINAL CONDITION.

6. ALL DISTANCES AND DATA SHALL BE CHECKED BY THE CONTRACTOR PRIOR TO THE START OF CONSTRUCTION. IN CASE OF CONFLICT THE ENGINEER SHALL BE NOTIFIED IMMEDIATELY SO THAT CLARIFICATION MAY BE MADE PRIOR TO THE START OF THE WORK.

7. THE CONTRACTOR SHALL ARRANGE FOR, SECURE AND PAY FOR DIRECTLY, ANY AND ALL TEMPORARY UTILITY SUPPLIES (E.G. POWER AND TELEPHONE) IT MAY REQUIRE FOR PROSECUTION OF ITS WORK. THE COST OF SUCH UTILITIES SHALL BE INCLUDED IN THE APPROPRIATE BID ITEM WITH WHICH IT IS ASSOCIATED.

8. SHOULD CONSTRUCTION BE HALTED BECAUSE OF INCLEMENT WEATHER CONDITIONS, THE CONTRACTOR WILL COMPLETELY CLEAN UP ALL AREAS AND MAINTAIN THE SURFACE IN GOOD CONDITION DURING THE SHUT–DOWN PERIOD.

9. THE CONTRACTOR'S PERSONNEL, EQUIPMENT, AND OPERATIONS SHALL COMPLY FULLY WITH ALL APPLICABLE STANDARDS, REGULATIONS, AND REQUIREMENTS OF EXISTING FEDERAL, STATE OF IDAHO, AND LOCAL GOVERNMENTAL AGENCIES.

10. THE CONTRACTOR SHALL BE RESPONSIBLE FOR OBTAINING ALL LOCAL, STATE, AND FEDERAL PERMITS REQUIRED FOR STORMWATER POLLUTION PREVENTION AS A RESULT OF CONSTRUCTION ACTIVITIES. THE CONTRACTOR SHALL PREPARE A STORMWATER POLLUTION PREVENTION PLAN FOR APPROVAL BY THE ENGINEER. IF THE CONSTRUCTION WILL DISTURB MORE THAN ONE ACRE, THE CONTRACTOR SHALL OBTAIN A COPY OF THE U.S. ENVIRONMENTAL PROTECTION AGENCY'S NPDES GENERAL PERMIT FOR STORM WATER DISCHARGES ASSOCIATED WITH CONSTRUCTION ACTIVITY (OTHERWISE KNOWN AS THE CONSTRUCTION GENERAL PERMIT OR CGP) AND SUBMIT A "NOTICE OF INTENT" (NOI)[EPA FORM 3510–9 (6/03)] FOR PERMIT COVERAGE UNDER THE GENERAL PERMIT. THE CGP MAY BE FOUND ON THE INTERNET AT <HTTP://WWW.EPA.GOV/NPDES/STORMWATER/CGP> OR BY CONTACTING THE U.S. EPA OFFICE OF WATER DIRECTLY AT (800) 424–4372. THE NOI MAY BE FILED ELECTRONICALLY AT THE FOLLOWING WEBSITE: <HTTP://CFPUB.EPA.GOV/NPDES/STORMWATER/ENOI.CFM>. THE CGP DOES NOT RELIEVE THE CONTRACTOR FROM COMPLIANCE WITH OTHER REGULATIONS OR CONTRACT REQUIREMENTS REGARDING STORMWATER POLLUTION PREVENTION INCLUDING BUT NOT LIMITED TO: PROTECTION OF SURFACE WATERS, PREVENTION OF SOIL RUNOFF INTO DRAINS, DUST CONTROL, PREVENTION OF TRACKING SOILS TO ADJACENT STREETS, FUEL CONTAINMENT, SPILL CONTROL, ETC.

11. ALL WORK SHALL BE CONTAINED IN OR LIMITED TO THE CITY'S PROPERTY, EASEMENTS, OR APPROVED STAGING AREAS.

12. THE GEOTECHNICAL EVALUATION FOR THIS PROJECT IS FOUND IN THE PROJECT SPECIFICATIONS. RECOMMENDATIONS FROM THE REPORT SHALL BE FOLLOWED. IN THE EVENT OF A CONFLICT WITH THE PROJECT SPECIFICATIONS, THE ENGINEER AND THE GEOTECHNICAL ENGINEER WILL APPROVE THE PROPER COURSE OF ACTION. REFER TO GEOTECHNICAL REPORT FOR SUBSURFACE SOILS INFORMATION.

13. CONTRACTOR TO PROVIDE, CONSTRUCT, MAINTAIN AND REMOVE A TEMPORARY FENCE AROUND THE CONSTRUCTION SITE USED TO PROTECT NEIGHBORING PROPERTIES FROM DAMAGE. CONTRACTOR IS ALSO RESPONSIBLE TO PROTECTION TO SAFE GUARD WORK SITE. PAY ITEM TO BE INCLUDED IN MOBILIZATION.

14. THE ENGINEER WILL PROVIDE VERTICAL AND HORIZONTAL CONTROLS ONE TIME ON THE PROJECT SITE. ANY ADDITIONAL CONSTRUCTION STAKING REQUIRED TO COMPLETE THE PROJECT SHALL BE THE RESPONSIBILITY OF THE CONTRACTOR.

15. CONTRACTOR SHALL LOCATE AND PROTECT ALL EXISTING UTILITIES AND BE RESPONSIBLE FOR DAMAGES TO EXISTING UTILITIES AND EXISTING IMPROVEMENTS AS A RESULT OF THE CONTRACTOR'S CONSTRUCTION ACTIVITIES.

16. DURING CONSTRUCTION, ALL OPEN ENDS OF ALL PIPE LINES SHALL BE COVERED AND SEALED AT THE END OF THE WORK DAY.

WATER NOTES

1. CONSTRUCT THE WATER SYSTEM TO CONFORM WITH THE STANDARDS IN THE "IDAHO RULES FOR PUBLIC DRINKING WATER SYSTEMS (IDAPA 58.01.08)" AND THE CITY OF MOSCOW STANDARD CONSTRUCTION SPECIFICATIONS AND DRAWINGS.

2. ALL WATER PIPE AND FITTING SHALL COMPLY WITH APPLICABLE PORTIONS OF SECTION 3.1 OF THE STANDARD SPECIFICATIONS AND DRAWINGS. WATER MAINS SHALL BE AWWA C–900, CLASS 165 PVC.

3. CONTRACTOR SHALL BE RESPONSIBLE FOR ALL DEWATERING DURING THE CONSTRUCTION PERIOD PER ISPWC 205 AND THE PROJECT SPECIFICATIONS. IF GROUNDWATER IS ENCOUNTERED, SUBMIT A DEWATERING PLAN TO ENGINEER FOR REVIEW PRIOR TO ANY DEWATERING ACTIVITIES.

4. THE LOCATION OF EXISTING UTILITIES ARE SHOWN IN APPROXIMATE WAY ONLY. THE CONTRACTOR SHALL DETERMINE THE EXACT LOCATION OF ALL EXISTING UTILITIES BEFORE COMMENCING WORK. THE CONTRACTOR AGREES TO BE FULLY RESPONSIBLE FOR ANY AND ALL DAMAGES WHICH MIGHT BE OCCASIONED BY HIS/HER FAILURE TO EXACTLY LOCATE AND PRESERVE ANY AND ALL UNDERGROUND UTILITIES. CALL DIG LINE AT 811 48 HOURS PRIOR TO EXCAVATING TO REQUEST LOCATIONS OF UNDERGROUND UTILITIES.

5. THE EXISTING PIPELINE ALIGNMENT AND DEPTH IS BASED ON LIMITED RECORD INFORMATION AND FIELD MARKINGS. CONTRACTOR SHALL EXACTLY LOCATE THE EXISTING MAIN BY POTHOLING AT EACH END OF EXISTING WATER MAIN CONNECTION POINTS PRIOR TO COMMENCING OTHER WORK. NOTIFY ENGINEER IF ACTUAL CONDITIONS ARE DIFFERENT THAN DEPICTED ON THE PLANS.

6. THE HORIZONTAL SEPARATION OF POTABLE WATER MAINS AND NON–POTABLE WATER MAINS SHALL BE A MINIMUM OF TEN (10) FEET. WHERE IT IS NECESSARY FOR NON–POTABLE WATER MAINS TO CROSS EACH OTHER, AND THE NON–POTABLE MAIN IS LESS THAN EIGHTEEN (18) INCHES BELOW OR ABOVE THE POTABLE WATER MAIN, THE NON–POTABLE MAIN SHALL BE CLASS 250 ASTM D–2241 PVC PIPE WITH WATER–TIGHT JOINTS, OR EQUAL CONSTRUCTION, FOR A DISTANCE OF TEN (10) FEET ON BOTH SIDES OF THE POTABLE WATER MAIN IN ACCORDANCE WITH SECTION 542.07 OF THE IDAHO RULES FOR PUBLIC DRINKING WATER SYSTEMS (IDAPA 58.01.08). ONE FULL LENGTH, 20', OF BOTH THE POTABLE WATER MAIN AND THE NON–POTABLE MAIN SHALL BE CENTERED AT THE CROSSING POINT SO THAT ALL JOINTS WILL BE AS FAR FROM THE CROSSING AS POSSIBLE. THE NON–POTABLE LINE CONSTRUCTED WITHIN EIGHTEEN (18) INCHES OF THE POTABLE LINE OR ABOVE THE POTABLE LINE MUST PRESSURE TESTED FOR WATER TIGHTNESS FOR A DISTANCE OF TEN (10) FEET ON BOTH SIDES OF THE CROSSING. IN LIEU OF CONSTRUCTING OR RECONSTRUCTING THE NON–POTABLE MAIN TO CONFORM TO POTABLE MAIN STANDARDS, THE POTABLE WATER MAIN MAY BE SLEEVED IN AWWA C–900, CLASS 200 PVC FOR A DISTANCE OF TEN (10) FEET ON BOTH SIDES OF THE CROSSING.

7. THE HORIZONTAL SEPARATION OF NON–POTABLE SERVICES AND POTABLE WATER SERVICES OR POTABLE WATER MAINS SHALL BE A MINIMUM OF SIX (6) FEET. WHERE IT IS NECESSARY FOR NON–POTBALE SERVICES (SANITARY SEWER, STORM DRAIN, AND IRRIGATION) AND POTABLE WATER SERVICES OR POTABLE WATER MAINS TO CROSS EACH OTHER, AND THE NON–POTABLE SERVICE IS ABOVE THE POTABLE WATER SERVICE OR POTABLE WATER MAIN (REGARDLESS OF VERTICAL SEPARATION DISTANCE) OR IS LESS THAN EIGHTEEN (18) INCHES BELOW OR ABOVE THE POTABLE WATER SERVICE OR POTABLE WATER MAIN, THE NON–POTABLE SERVICE SHALL BE CLASS 250 ASTM D–2241 PVC PIPE WITH WATER–TIGHT JOINTS, OR EQUAL CONSTRUCTION, FOR A DISTANCE OF TEN (10) FEET ON BOTH SIDES OF THE POTABLE WATER SERVICE OR POTABLE WATER MAIN IN ACCORDANCE WITH SECTION 542.07 OF THE IDAHO RULES FOR PUBLIC DRINKING WATER SYSTEMS (IDAPA 58.01.08). ONE FULL LENGTH, 20', OF BOTH THE POTABLE WATER SERVICE OR POTABLE WATER MAIN AND THE NON–POTABLE SERVICE SHALL BE CENTERED AT THE CROSSING POINT SO THAT ALL JOINTS WILL BE AS FAR FROM THE CROSSING AS POSSIBLE. THE NON–POTABLE LINE CONSTRUCTED WITHIN EIGHTEEN (18) INCHES OF THE POTABLE LINE OR ABOVE THE POTABLE LINE MUST BE PRESSURE TESTED FOR WATER TIGHTNESS FOR A DISTANCE OF TEN (10) FEET ON BOTH SIDES OF THE CROSSING. IN LIEU OF CONSTRUCTING OR RECONSTRUCTING THE NON–POTABLE SERVICE TO CONFORM TO POTABLE SERVICE STANDARDS, THE POTABLE WATER SERVICE OR POTABLE WATER MAIN MAY BE SLEEVED IN AWWA C–900, CLASS 200 PVC FOR A DISTANCE OF TEN (10) FEET ON BOTH SIDES OF THE CROSSING.

8. ALL INTERIOR SURFACES OR COATINGS SHALL CONSIST OF PRODUCTS WHICH ARE CERTIFIED BY LABORATORIES APPROVED BY ANSI AND WHICH COMPLY WITH ANSI/NSF STANDARDS 61 AND 372. THIS REQUIREMENT APPLIES TO ANY PIPES AND FITTINGS, PROTECTIVE MATERIALS (E.G. PAINTS, COATINGS, CONCRETE ADMIXTURES, SEALERS), JOINING AND SEALING MATERIALS (E.G. ADHESIVES, CAULKS, GASKETS, PRIMERS, AND SEALANTS) AND MECHANICAL DEVICES (E.G. ELECTRICAL WIRE, SWITCHES, SENSORS, VALVES) WHICH ARE LOCATED SO AS TO COME IN CONTACT WITH DRINKING WATER.

9. THE CONTRACTOR SHALL NOTIFY THE PUBLIC WORKS DEPARTMENT TWO (2) WORKING DAYS BEFORE INITIAL CONSTRUCTION BEGINS AND SHALL ALSO REQUEST INSPECTION OF WATER LINES AND APPURTENANCES TWENTY–FOUR (24) HOURS IN ADVANCE OF BACKFILLING.

10. CONSTRUCT, FLUSH AND DISINFECT ALL WATER DISTRIBUTION SYSTEMS IN ACCORDANCE WITH APPLICABLE PORTIONS OF SECTION 542.02 OF THE IDAHO RULES FOR PUBLIC DRINKING WATER SYSTEMS (IDAPA 58.01.08) AND CITY OF MOSCOW WATER DEPARTMENT REQUIREMENTS. PRESSURE AND LEAKAGE TESTING OF WATER MAINS SHALL COMPLY WITH AWWA C600.

11. THE CONTRACTOR SHALL BE RESPONSIBLE FOR PROVIDING CONTINUOUS WATER SERVICE TO ALL EXISTING USERS AFFECTED BY CONSTRUCTION.

12. THE CONTRACTOR SHALL BE RESPONSIBLE FOR LOCATING AND MARKING ALL EXISTING SERVICE CONNECTIONS.

13. SECURE AND ANCHOR ALL TEE, PLUGS, CAPS, BENDS, AND OTHER LOCATIONS WHERE UNBALANCED FORCED EXIST BY MECHANICAL RESTRAINTS.

14. THE CONTRACTOR MAY PRESSURE TEST ALL WATER LINES AFTER DISINFECTION AND FLUSHING, FOR HIS OWN BENEFIT PRIOR TO INSTALLATION OF OTHER UTILITIES TO ENSURE THE INTEGRITY OF THE INSTALLED LINE. AFTER ALL UTILITIES ARE INSTALLED AND PRIOR TO PAVING, THE CONTRACTOR SHALL PERFORM FINAL PRESSURE AND BACTERIA TESTS WITH THE CITY INSPECTOR PRESENT. THE CONTRACTOR SHALL FURNISH ALL PERSONNEL AND EQUIPMENT NECESSARY TO CONDUCT THE TEST. TEST PRESSURE SHALL BE 150 PSI.

EXISTING UTILITIES

1. APPROXIMATE LOCATIONS OF UTILITIES ARE SHOWN ON THE PLANS. THEY ARE TO BE USED FOR GENERAL INFORMATION ONLY. IT IS THE RESPONSIBILITY OF THE CONTRACTOR TO NOTIFY THE APPROPRIATE UTILITY COMPANIES WHEN CONSTRUCTION MIGHT INTERFERE WITH NORMAL OPERATION OF ANY UTILITIES. IT SHALL ALSO BE THE CONTRACTOR'S RESPONSIBILITY TO HAVE THE APPROPRIATE UTILITY COMPANY FIELD–LOCATE ANY UTILITY INSTALLATIONS WHICH MIGHT BE AFFECTED BY CONSTRUCTION PRIOR TO BEGINNING WORK IN THAT AREA. THE CONTRACTOR SHALL BE RESPONSIBLE FOR MAINTAINING SERVICE OF EXISTING UTILITIES AND FOR RESTORING ANY UTILITIES DAMAGED DUE TO CONSTRUCTION AT NO ADDITIONAL COST TO THE OWNER. DEPTHS AND ELEVATIONS OF UTILITIES ARE UNKNOWN UNLESS OTHERWISE SHOWN. CONTRACTOR SHALL FIELD VERIFY UTILITY DEPTHS, ELEVATIONS, ANY DISCREPANCIES AND/OR CONFLICTS SHALL BE BROUGHT TO THE ATTENTION OF THE ENGINEER IMMEDIATELY.

AVISTA –
DARREL HAARR 509–336–6238

CHARTER COMMUNICATIONS –
JEFF BOREN 509–330–5044

ZIPLY COMMUNICATIONS –
BRENT MULFORD 208–883–0478

INSPECTION AND TESTING

1. THE CONTRACTOR SHALL BE RESPONSIBLE FOR MATERIALS TESTING INCLUDING BUT NOT LIMITED TO CONCRETE, FLUSHING, DISINFECTION, LEAK, PRESSURE, BACTERIOLOGICAL, AND COMPACTION. ALL TESTS SHALL MEET MINIMUM ENGINEER REQUIREMENTS. SEE THE CONTRACT DOCUMENTS AND DRAWINGS FOR FREQUENCY OF TESTING. RESULTS ARE TO BE DELIVERED TO SPECIAL INSPECTOR, OWNER AND ENGINEER.

2. THE CONTRACTOR IS RESPONSIBLE TO COORDINATE WITH ENGINEER AND SPECIAL INSPECTOR FOR INSPECTIONS OF WORK AT APPROPRIATE INTERVALS. IT SHALL BE THE CONTRACTOR'S RESPONSIBILITY TO PAY FOR ADDITIONAL INSPECTIONS THAT ARE THE RESULT OF HIS WORKMANSHIP.

CONTACT PHONE NUMBERS

CITY OF MOSCOW –		
SCOTT BONTRAGER	208–883–7030 o	CITY ENGINEER
TYLER PALMER	208–882–3122 o	DEPUTY CITY SUPERVISOR
STEVE SCHULTE	208–883–7097 o	STREET/STORM MANAGER
MICHAEL PARKER	208–882–3122 o	WATER UTILITY MANAGER
ENGINEER –		
CHRIS PETTIGREW	208–376–7330 o	PROJECT MANAGER

CALL 2 BUSINESS DAYS IN ADVANCE BEFORE YOU DIG, GRADE, OR EXCAVATE FOR THE MARKING OF UNDERGROUND MEMBER UTILITIES

811 Know what's below. Call before you dig.

J-U-B ENGINEERS, INC.

J-U-B ENGINEERS, INC.
201 South Jackson Street
Moscow, ID 83843
Phone: 208.746.9010
www.jub.com

PROFESSIONAL ENGINEER LICENSED 16311 STATE OF IDAHO CHRISTOPHER S. PETTIGREW 02/19/2021

REUSE OF DRAWINGS:
J-U-B SHALL RETAIN ALL COMMON LAW, STATUTORY, COPYRIGHT AND OTHER RESERVED RIGHTS OF THESE DRAWINGS, AND THE SAME SHALL NOT BE REUSED WITHOUT J-U-B'S PRIOR WRITTEN CONSENT. ANY REUSE WITHOUT WRITTEN CONSENT BY J-U-B WILL BE AT CLIENTS SOLE RISK AND WITHOUT LIABILITY OR LEGAL EXPOSURE TO J-U-B.

NO.	DESCRIPTION	BY	APPR.	DATE
	REVISION			

SIXTH STREET CROSSING OVER PARADISE CREEK
CITY OF MOSCOW

GENERAL NOTES

FILE : 21-20-010_G-002
JUB PROJ. # : 20-21-010
DRAWN BY: KWC
DESIGN BY: CSP
CHECKED BY: CSP
ONE INCH
AT FULL SIZE, IF NOT ONE INCH, SCALE ACCORDINGLY
LAST UPDATED: 2/19/2021
SHEET NUMBER:
G-002

Plot Date:2/19/2021 3:10 PM Plotted By: Kurt Cox
Date Created:2/19/2021 \\JUB.COM\CENTRAL\CLIENTS\ID\MOSCOWCITY\PROJECTS\21-20-010_SIXTHSTREETCROSSINGOVERPARADISECREEK\DESIGN\CAD\SHEET\21-20-010_G-002.DWG

LINE LEGEND

LINE DESCRIPTION	PROPOSED LINE	EXISTING LINE
POWER / COMMUNICATIONS		
OVERHEAD POWER	OHP	OHP
UNDERGROUND POWER	UP	UP
OVERHEAD TELEPHONE	OHT	OHT
UNDERGROUND TELEPHONE	UT	UT
FIBER OPTIC	F/O	F/O
CABLE TELEVISION	CTV	CTV
UNDERGROUND POWER, TEL, CABLE TV		P,T,CTV
UNDERGROUND POWER, TEL, CABLE TV, GAS		P,T,CTV,G
STORM DRAIN		
STORM DRAIN (GENERAL)	SD	SD
STORM DRAIN	X"SD	X"SD
ROOF DRAIN	RD	RD
SANITARY SEWER		
SANITARY SEWER (GENERAL)	SS	SS
SANITARY SEWER	X"SS	X"SS
SANITARY SEWER SERVICE	SS SS	SS SS
SEWER FORCE MAIN	FM	FM
WATER		
WATER (GENERAL)	W	W
WATER (SPECIFIED SIZE)	X"W	X"W
WATER SERVICE	WS WS	WS WS
IRRIGATION		
IRRIGATION	IRR	IRR
GRAVITY IRRIGATION	GIRR	GIRR
PRESSURE IRRIGATION	PIRR	PIRR
POTABLE WATER	PW	PW
NON-POTABLE WATER	NPW	NPW
GAS		
NATURAL GAS	G	G
NATURAL GAS SERVICE	G G	G G
HIGH PRESSURE GAS	HPG	HPG
LIQUID GAS	LG	LG
UTILITY		
CHLORINE LINE	CHL	CHL
INDUSTRIAL WASTE WATER	IWW	IWW
DRAIN LINE		DL

LINE DESCRIPTION	PROPOSED LINE	EXISTING LINE
BOUNDARY		
PROPERTY LINE	P/L	P/L
PROPERTY LINE		
RIGHT OF WAY	R/W	R/W
TEMPORARY EASEMENT	T/E	T/E
PERMANENT EASEMENT	P/E	P/E
TOWNSHIP AND RANGE		
SECTION LINE		
QUARTER SECTION LINE		
1/16 SECTION LINE		
STATE LINE		
COUNTY LINE		
SITE		
FENCE	X	X
MAJOR CONTOUR	2521	
MINOR CONTOUR		
GRADE BREAK		GB
TOP OF BANK		TOB
TOE OF SLOPE		TOE
CUT LIMITS		
FILL LIMITS		
DITCH		
STORM SWALE		
EDGE OF WATER		
HIGH WATER		
WETLAND		WET
WETLAND BOG		BOG
WETLAND MARSH		MRSH
WETLAND SWAMP		SWMP
ROADWAY		
ROAD SHOULDER		
ROAD CENTERLINE		
ROAD ASPHALT		EP
ROAD GRAVEL		EG
TOP BACK OF CURB		
LIP OF GUTTER		
LANDSCAPING LIMITS	LS	LS

SHEET NUMBERING

SAMPLE: C–101

C – 1 01

- DISCIPLINE DESIGNATOR
- SHEET TYPE DESIGNATOR
- SHEET SEQUENCE NUMBER

DISCIPLINE DESIGNATORS

DISCIPLINE	DESIGNATOR	DESCRIPTION
GENERAL	G	ALL GENERAL
	GI	GENERAL INFORMATION
	GC	GENERAL CONTRACTUAL
	GR	GENERAL RESOURCE
SURVEY/MAPPING	V	ALL SURVEY
GEOTECHNICAL	B	ALL GEOTECHNICAL
CIVIL	C	ALL CIVIL
LANDSCAPE	L	ALL LANDSCAPE
STRUCTURAL	S	ALL STRUCTURAL
ARCHITECTURAL	A	ALL ARCHITECTURE
EQUIPMENT	Q	ALL EQUIPMENT
MECHANICAL	M	ALL MECHANICAL
ELECTRICAL	E	ALL ELECTRICAL
PLUMBING	P	ALL PLUMBING
PROCESS	D	ALL PROCESS
RESOURCE	R	ALL RESOURCE

SHEET TYPE DESIGNATORS

DESIGNATOR	SHEET TYPE
0	GENERAL (SYMBOLS, LEGENDS, NOTES, ETC.)
1	PLANS (HORIZONTAL VIEWS)
2	ELEVATIONS, PROFILES, COMBINED PLAN & PROFILES
3	SECTIONS (SECTIONAL VIEWS)
4	LARGE–SCALE VIEWS (PLANS, ELEVATIONS, ECT.)
5	DETAILS OR COMBINED DETAILS AND SECTIONS
6	SCHEDULES AND DIAGRAMS
7	USER DEFINED
8	USER DEFINED
9	3D REPRESENTATIONS (ISOMETRICS, PERSPECTIVES, PHOTOS)

SECTION AND DETAIL IDENTIFIERS

NOTE:
A DASH MAY BE PLACED IN THE LOWER PORTION OF THE IDENTIFIER IF THE DETAIL DRAWING OR SECTION VIEW IS LOCATED ON THE SAME SHEET.

	SECTION IDENTIFICATION	DETAIL IDENTIFICATION
CALLOUT	SECTION LETTER: A; SHEET NUMBER WHERE SECTION DRAWING IS LOCATED: C-501	DETAIL NUMBER: 1; SHEET NUMBER WHERE DETAIL DRAWING IS LOCATED: C-501
LABEL	SECTION LETTER: A; SECTION; SCALE:	DETAIL NUMBER: 1; DETAIL; SCALE:

J-U-B ENGINEERS, INC.

J-U-B ENGINEERS, INC.
201 South Jackson Street
Moscow, ID 83843
Phone: 208.746.9010
www.jub.com

PROFESSIONAL ENGINEER LICENSED 16311 STATE OF IDAHO CHRISTOPHER S. PETTIGREW 02/19/2021

REUSE OF DRAWINGS:
J-U-B SHALL RETAIN ALL COMMON LAW, STATUTORY, COPYRIGHT AND OTHER RESERVED RIGHTS OF THESE DRAWINGS, AND THE SAME SHALL NOT BE REUSED WITHOUT J-U-B'S PRIOR WRITTEN CONSENT. ANY REUSE WITHOUT WRITTEN CONSENT BY J-U-B WILL BE AT CLIENTS SOLE RISK AND WITHOUT LIABILITY OR LEGAL EXPOSURE TO J-U-B.

NO.	DESCRIPTION	BY	APPR.	DATE

REVISION

SIXTH STREET CROSSING OVER PARADISE CREEK
CITY OF MOSCOW

LEGEND

FILE: 21-20-010_G-003
JUB PROJ. #: 20-21-010
DRAWN BY: KWC
DESIGN BY: CSP
CHECKED BY: CSP
ONE INCH
AT FULL SIZE, IF NOT ONE INCH, SCALE ACCORDINGLY
LAST UPDATED: 2/19/2021

SHEET NUMBER:
G-003

Plot Date:2/19/2021 3:10 PM Plotted By: Kurt Cox
Date Created:2/19/2021 \\JUB.COM\CENTRAL\CLIENTS\ID\MOSCOW\CITY\PROJECTS\21-20-010_SIXTHSTREETCROSSINGOVERPARADISECREEK\DESIGN\CAD\SHEET\21-20-010_G-003.DWG

SYMBOL DESCRIPTION	EXISTING SYMBOL	PROPOSED SYMBOL
SURVEY		
CAP (ALUMINUM)		
CAP (BRASS)		
CHISELED X		
CTRL PT GENERIC		
CTRL PT ½" REBAR	1/2" PIN CONTROL PT	
CTRL PT ⅝" REBAR	5/8" PIN CONTROL PT	
CTRL PT 60D NAIL	60D	
CTRL PT HUB & TACK	HT	
CTRL PT PK NAIL	PK	
CTRL PT TEMP BENCH MARK	TBM	
NAIL		
NAIL AND TAG	N/T	
NAIL (PK)	PK	
BOLT		
DRILL STEEL		
REBAR (½")		
REBAR (⅝")		
STAINLESS STEEL ROD		
IRON PIPE		
RAILROAD SPIKE		
R/W MONUMENT		
STONE		
SECTION CORNER. MON.	22 15 21 16	
SECTION QUARTER MON.	15 22	
SITE		
BOLLARD		
BOULDER		
DRINKING FOUNTAIN	DF	DF
FLAGPOLE	F	F
GATE		
MAIL BOX	M	M
PARKING METER	PM	PM
POST		
SIGN		
SPOT ELEVATION		
TREE (SHRUB)		
TREE (STUMP)		
TREE (CONIFEROUS)		
TREE (DECIDUOUS)		
TEST HOLE	TH	
WELL	W	
WELL (MONITORING)	M	M

SYMBOL DESCRIPTION	EXISTING SYMBOL	PROPOSED SYMBOL
UTILITIES		
MANHOLE (GENERIC)		
PRESSURE CLEAN OUT AT GRADE	PCO	PCO
THRUST BLOCK		
VAULT	V	V
COMMUNICATION		
TELE. MANHOLE	T	
TELE. PEDASTAL	T	T
TELE. POLE		
TV PEDASTAL	TV	TV
GUY WIRE		
DOMESTIC WATER		
FIRE HYDRANT		
SPIGOT		
YARD HYDRANT		
WATER MANHOLE	W	
WATER METER		
WATER VALVE	W	W
ELECTRIC		
ELEC. MANHOLE	E	
ELEC. METER	E	E
ELEC. TRANS.	E	E
JUNCTION BOX	J	J
POWER POLE		
POWER STUB	E	E
STREET LIGHT		
TRAFFIC SIGNAL POLE		
IRRIGATION		
IRRIGATION VALVE	IRR	IRR
IRRIGATION VALVE BOX	I	I
SPRINKLER		
NATURAL GAS		
GAS METER	G	G
GAS VALVE	G	G
SANITARY SEWER		
CLEANOUT		
SEWER STUB	S	S
SS MANHOLE		
STORM DRAIN		
CATCH BASIN		
DRY WELL	DW	DW
FLARE END		
GREASE TRAP		
SD MANHOLE	D	

SYMBOL DESCRIPTION	EXISTING SYMBOL	PROPOSED SYMBOL
FITTINGS		
BEND (11.25°)		
BEND (22.5°)		
BEND (45°)		
BEND (90°)		
CAP		
COUPLING		
CROSS		
REDUCER (CONCENTRIC)		
REDUCER (ECCENTRIC)		
TEE		
TRUE UNION		
WYE		
VALVES		
AIR VALVE	A	A
BLOW OFF	B	B
COMBO VALVE	C	C
BALL VALVE (N.C.)		
BALL VALVE (N.O.)		
BUTTERFLY VALVE		
CHECK VALVE		
CHECK VALVE (FLANGE)		
CHECK VALVE (MJ)		
GATE VALVE		
PLUG VALVE (N.C.)		
PLUG VALVE (N.O.)		
ROAD MARKINGS		
TURN ARROW		
ARROW STRAIGHT		
ARROW STRAIGHT/TURN		
BICYCLE ROUTE		
CAR		
HANDICAP SYMBOL		
ROADWAY		
INTERSTATE ROUTE	25	
MAST ARM		
PEDESTRIAN SIGNAL		
STATE ROUTE	14	
TRAFFIC LIGHT		

SYMBOL DESCRIPTION	EXISTING SYMBOL	PROPOSED SYMBOL
ROADWAY (CONT.)		
TYPE 2 BARRICADE		
US ROUTE	287	
TRAFFIC ATTENUATOR		
JERSEY BARRIER		

ABBREVIATIONS

ASSY	ASSEMBLY
>	ANGLE
@	AT (MEASUREMENTS)
BLDG	BUILDING
BM	BENCH MARK
BSC	BITUMINOUS SURFACE COURSE
BSW	BACK OF SIDEWALK
BW	BOTH WAYS
C	CHANNEL (STRUCTURAL)
C/L	CENTER LINE
CMP	CORRUGATED METAL PIPE
CO	CLEANOUT
CONC	CONCRETE
CONT	CONTINUOUS
CPLG	COUPLING
CU FT	CUBIC FEET
CU YD	CUBIC YARD
DEG OR °	DEGREE
DET	DETAIL
DIA OR ø	DIAMETER
DIP	DUCTILE IRON PIPE
DIST	DISTRIBUTION
DWG	DRAWING
EA	EACH
ELB	ELBOW
ELEV	ELEVATION
EW	EACH WAY
EXIST	EXISTING
FG	FINISH GRADE
FH	FIRE HYDRANT
FLG	FLANGE
FT OR '	FEET
GV	GATE VALVE
HORIZ	HORIZONTAL
HPM	HELICAL PULLDOWN MICROPILE
ID	INSIDE DIAMETER
IN OR "	INCH
LB OR #	POUND
LF	LINEAL FEET
LN	LINEAL
MAX	MAXIMUM
MIN	MINIMUM
NO OR #	NUMBER
PE	POLYETHYLENE
PL	PLATE
PL	PROPERTY LINE
PVC	POLYVINYL–CHLORIDE
R	RADIUS
RP	RADIUS POINT
R&R	REMOVE & REPLACE
REM	REMOVE
REQ'D	REQUIRED
REV	REVISION
R/W	RIGHT–OF–WAY
S	SLOPE
SPEC	SPECIFICATION
STA	STATION
STD	STANDARD
STL	STEEL
ST STL	STAINLESS STEEL
TBC	TOP BACK OF CURB
TYP	TYPICAL
TFC	TOP FACE OF CONCRETE
W/	WITH
W/O	WITHOUT
W/REQ'D	WHERE REQUIIRED

J-U-B ENGINEERS, INC.

J-U-B ENGINEERS, INC.
201 South Jackson Street
Moscow, ID 83843
Phone: 208.746.9010
www.jub.com

PROFESSIONAL ENGINEER LICENSED 16311 STATE OF IDAHO 02/19/2021 CHRISTOPHER S. PETTIGREW

REUSE OF DRAWINGS:
J-U-B SHALL RETAIN ALL COMMON LAW, STATUTORY, COPYRIGHT AND OTHER RESERVED RIGHTS OF THESE DRAWINGS, AND THE SAME SHALL NOT BE REUSED WITHOUT J-U-B'S PRIOR WRITTEN CONSENT. ANY REUSE WITHOUT WRITTEN CONSENT BY J-U-B WILL BE AT CLIENTS SOLE RISK AND WITHOUT LIABILITY OR LEGAL EXPOSURE TO J-U-B.

NO.	DESCRIPTION	BY	APR.	DATE

REVISION

SIXTH STREET CROSSING OVER PARADISE CREEK
CITY OF MOSCOW

SYMBOLS

FILE : 21-20-010_G-004
JUB PROJ. # : 20-21-010
DRAWN BY: KWC
DESIGN BY: CSP
CHECKED BY: CSP

ONE INCH
AT FULL SIZE, IF NOT ONE INCH, SCALE ACCORDINGLY

LAST UPDATED: 2/19/2021

SHEET NUMBER:
G-004

Plot Date:2/19/2021 3:10 PM Plotted By: Kurt Cox
Date Created:10/21/2020 \\JUB.COM\CENTRAL\CLIENTS\ID\MOSCOWCITY\PROJECTS\21-20-010_SIXTHSTREETCROSSINGOVERPARADISECREEK\DESIGN\CAD\SHEET\21-20-010_G-004.DWG

SHEET NUMBER				C–101	C–102	C–201	C–202	C–900
STATION - STATION				58+35 – 61+65	61+65 – 63+10	58+35 – 61+65	61+65 – 63+10	N/A
ROADWAY ITEMS								
ITEM NO.	ITEM	UNIT	TOTAL					
201.4.1.A.1	CLEARING AND GRUBBING	AC	0.14					
201.4.1.C.1	REMOVAL OF OBSTRUCTIONS	LS	1					
201.4.1.D.1	REMOVAL OF BITUMINOUS SURFACE	SY	715			710	5	
201.4.1.E.1	REMOVAL OF EXISTING WATER MAIN – SIZE 8"	LF	384	213	171			
201.4.1.E.3	REMOVAL OF EXISTING WATER MAIN – SIZE 24"	LF	163	163				
201.4.1.F.3	REMOVAL OF EXISTING HYDRANT	EA	3	2	1			
202.4.1.A.1	EXCAVATION	CY	558					
202.4.5.A.1	UNSUITABLE MATERIAL EXCAVATION	CY	100					
202.4.8.A.1	DUST ABATEMENT WATER	MG	100					
206.4.1.A.1	SEEDBED PREPARATION	AC	0.05					
206.4.1.B.1	SEEDING	AC	0.05					
206.4.1.C.1	MULCHING	AC	0.05					
206.4.1.H.3	LOOSE RIPRAP	CY	220			220		
307.4.1.A.7	MISC. SURFACE AND RESTORATION (NATURAL GROUND)	LF	443	350	93			
308.4.1.C.1	STEEL CASING SLEEVE – SIZE 18" (0.375" THICK)	LF	20	20				
308.4.1.C.3	STEEL CASING SLEEVE – SIZE 36" (0.375" THICK)	LF	40	40				
401.4.1.A.1	WATER MAIN PIPE – SIZE 10" – TYPE C900, CLASS 235 PVC (DR18)	LF	384	213	171			
401.4.1.A.3	WATER MAIN PIPE – SIZE 24" – TYPE C900, CLASS 235 PVC (DR18)	LF	179	179				
401.4.1.C.1	CONNECT TO EXISTING WATER MAIN	EA	4	3	1			
402.4.1.A.1	GATE VALVE – SIZE 10"	EA	3	2	1			
403.4.1.A.1	HYDRANT	EA	2	1	1			
601.4.1.A.5	12" STORM DRAIN PIPE, CLASS C–900 PVC	LF	157			157		
602.4.1.A.1	STORM DRAIN MANHOLE – TYPE A	EA	2			2		
602.4.1.F.1	CATCH BASIN – TYPE I	EA	2			2		
706.4.1.A.3	6 INCH VERTICAL CURB (NO GUTTER) "TYPE A"	LF	143			45.50	97.50	
706.4.1.A.5	STANDARD 6 INCH VERTICAL CURB AND GUTTER	LF	314			314		
706.4.1.E.1	CONCRETE SIDEWALKS, THICKNESS 5"	SY	287			228	59	
706.4.1.F.1	CONCRETE DRIVEWAY APPROACH (6" THICK)	SY	25			25		
802.4.1.B.1	CRUSHED AGGREGATE FOR BASE TYPE I	TON	436			412	24	
802.4.1.B.2	CRUSHED AGGREGATE FOR BASE TYPE II	TON	580			548	32	
806.4.1.B.1	DILUTED EMULSIFIED ASPHALT FOR TACK COAT	GAL	30					
810.4.1.A.1	PLANT MIX PAVEMENT	TON	225			223	2	
1001.4.2.B.1	STABILIZED CONSTRUCTION ENTRANCE	EA	2			2		
1003.4.1.A.1	STRAW BALES	LF	100					
1003.4.1.C.1	SILT FENCE	LF	250					
1103.4.1.B.1	TRAFFIC CONTROL SIGNS, CLASS B	SF	262					262
1103.4.1.C.1	TRAFFIC CONTROL BARRICADES, TYPE III	EA	4					4
1103.4.1.J.1	TRAFFIC CONTROL MAINTENANCE	MNHR	120					
2010.4.1.A.1	MOBILIZATION	LS	1					
2050.4.1.B.1	RIPRAP/EROSION CONTROL GEOTEXTILE	SY	192			192		
2050.4.1.C.1	SUBGRADE SEPARATION GEOTEXTILE	SY	1397			1324	73	
SP–3001	CONTRACTOR FURNISHED CONSTRUCTION SURVEYING AND STAKING	LS	1					
SP–3004	AIR RELEASE VALVE ASSEMBLY	EA	3	2	1			
BRIDGE ITEMS								
ITEM NO.	ITEM	UNIT	TOTAL					
201.4.1.F.1	REMOVAL OF CULVERTS	EA	3					
202.4.6.A.1	BORROW	CY	150					
204.4.1.A.1	STRUCTURAL EXCAVATION SCHEDULE 1	CY	400					
204.4.3.A.1	COMPACTING BACKFILL	CY	350					
205.4.1.B.1	DEWATERING	LS	1					
702.4.2.A.1	REINFORCING STEEL	LB	42480					
703.4.1.A.1	CONCRETE (CAST–IN–PLACE) – CLASS 4000A	CY	83					
704.4.1.A.3	BRIDGE – 24' SPAN X 11' RISE	LS	1					
SP–3002	HELICAL PULLDOWN MICROPILE (HPM)	EA	79					
SP–3003	PEDESTRIAN/BICYCLE AND TRAFFIC RAILING	LF	135					

J-U-B ENGINEERS, INC.

J-U-B ENGINEERS, INC.
201 South Jackson Street
Moscow, ID 83843
Phone: 208.746.9010
www.jub.com

PROFESSIONAL ENGINEER LICENSED 16311 02/19/2021 STATE OF IDAHO CHRISTOPHER S. PETTIGREW

REUSE OF DRAWINGS:
J-U-B SHALL RETAIN ALL COMMON LAW, STATUTORY, COPYRIGHT AND OTHER RESERVED RIGHTS OF THESE DRAWINGS, AND THE SAME SHALL NOT BE REUSED WITHOUT J-U-B'S PRIOR WRITTEN CONSENT. ANY REUSE WITHOUT WRITTEN CONSENT BY J-U-B WILL BE AT CLIENTS SOLE RISK AND WITHOUT LIABILITY OR LEGAL EXPOSURE TO J-U-B.

NO.	DESCRIPTION	BY	APR.	DATE
	REVISION			

SIXTH STREET CROSSING OVER PARADISE CREEK
CITY OF MOSCOW

ROADWAY SUMMARY

FILE : 21-20-010_G-005
JUB PROJ. # : 20-21-010
DRAWN BY: KWC
DESIGN BY: CSP
CHECKED BY: CSP

ONE INCH
AT FULL SIZE, IF NOT ONE INCH, SCALE ACCORDINGLY

LAST UPDATED: 2/22/2021

SHEET NUMBER:
G-005

Plot Date:2/22/2021 5:22 PM Plotted By: Christopher Pettigrew
Date Created:2/5/2021 \\JUB.COM\CENTRAL\CLIENTS\ID\MOSCOW\CITY\PROJECTS\21-20-010_SIXTHSTREETCROSSINGOVERPARADISECREEK\DESIGN\CAD\SHEET\21-20-010_G-005.DWG

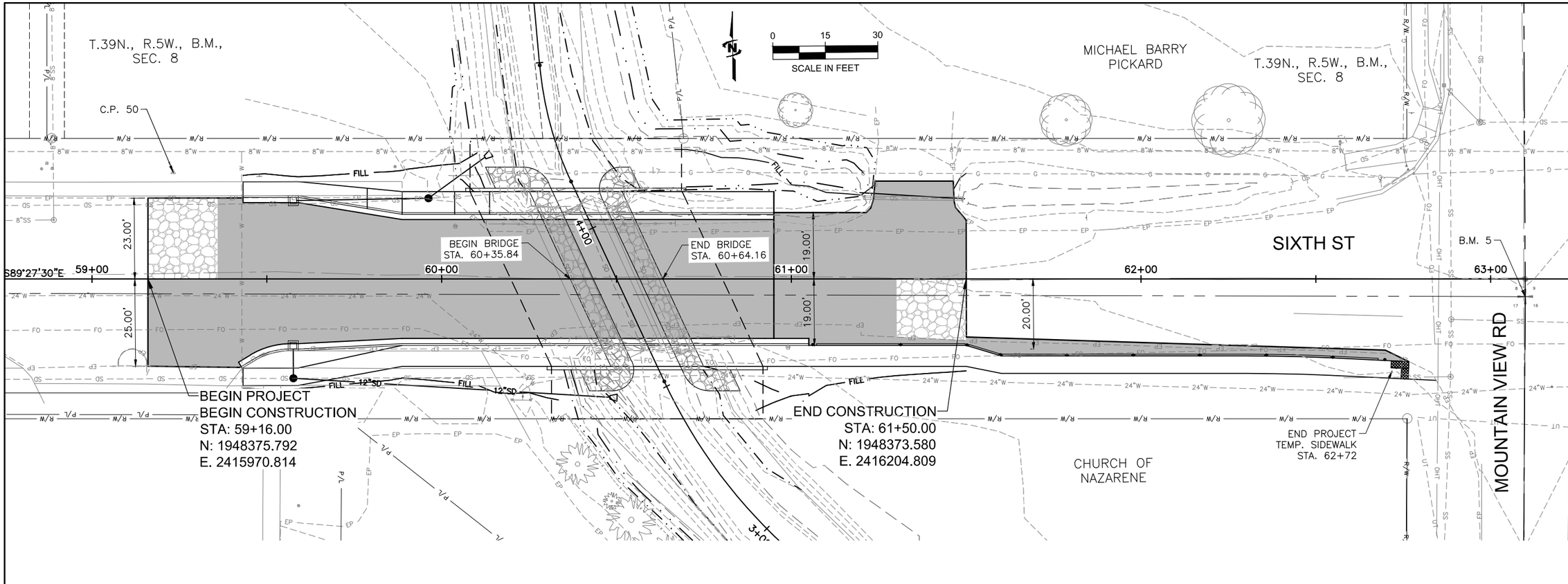

THE BASIS OF BEARING FOR THIS SURVEY IS THE U.S. STATE PLANE COORDINATE SYSTEM, 1983, IDAHO WEST ZONE #1103 – GRID NORTH, SHOWN HERE THE SECTION LINE BETWEEN THE ¼ CORNER MONUMENT OF SECTIONS 16 AND 17 AND THE NORTHEAST CORNER MONUMENT OF SECTION 17 AS, N0°53'11"E. THE CONVERGENCE ANGLE AT THE LOCATION OF THE ¼ CORNER MONUMENT BETWEEN SECTION 16 AND 17 IS –0°53'45".

THE BASIS OF ELEVATION FOR THIS SURVEY IS NGVD_29 AS ESTABLISHED FROM THE NORTHEAST CORNER BRASS CAP MONUMENT OF SECTION 17 LOCATED INSIDE A MONUMENT WELL AT THE INTERSECTION OF MOUNTAIN VIEW AND SIXTH STREET, SHOWN ON FEMA FLOOD INSURANCE RATE MAP, PANEL 2 OF 2, #1600900002 D, AS REFERENCE MARKER, RM–7, AND KNOWN ON THE CITY OF MOSCOW'S ELEVATION DATUM (NGVD_29) TO BE 2597.64 FEET.

THE STATE PLANE COORDINATES WERE DERIVED FROM USE OF GPS (TRIMBLE 5800 SERIES) RTK METHODS FROM A CENTRAL LOCALLY ESTABLISHED BASE LOCATION HAVING BEEN PREVIOUSLY CORRECTED USING NGS ONLINE POSITIONING USER SERVICE (OPUS) UTILIZING NAD_83 (CORS96) (EPOCH: 2002.0000). PROJECT COMBINED SCALE FACTOR = 0.9999171846 GROUND COORDINATES HAVE A X 100,000 Y 100,000 COORDINATE SEPARATION FROM STATE PLANE COORDINATES.

NOTE: ALIGNMENT CURVE DATE IS LOCATED ON SHEETS C–201 AND C–202.

B.M. 5
FOUND BRASS CAP
NE CORNER OF SECTION 17
STA. 63+10.00, 5.00' RT
ELEV. 2597.64
N 1948367.043
E 2416364.651

C.P. 50
NAIL
STA. 59+23.50, 30.33' LT
ELEV. 2596.47
N 1948406.280
E 2415978.330

J-U-B ENGINEERS, INC.
J-U-B ENGINEERS, INC.
201 South Jackson Street
Moscow, ID 83843
Phone: 208.746.9010
www.jub.com

PROFESSIONAL LAND SURVEYOR LICENSE NO. 13419 STATE OF IDAHO JEREMY J. RUSSELL
Digitally Signed: Feb 19, 2021

REUSE OF DRAWINGS
J-U-B SHALL RETAIN ALL COMMON LAW, STATUTORY, COPYRIGHT AND OTHER RESERVED RIGHTS OF THESE DRAWINGS, AND THE SAME SHALL NOT BE REUSED WITHOUT J-U-B'S PRIOR WRITTEN CONSENT. ANY REUSE WITHOUT WRITTEN CONSENT BY J-U-B WILL BE AT CLIENTS SOLE RISK AND WITHOUT LIABILITY OR LEGAL EXPOSURE TO J-U-B.

NO.	DESCRIPTION	BY	APPR.	DATE

REVISION

SIXTH STREET CROSSING OVER PARADISE CREEK
CITY OF MOSCOW

SURVEY CONTROL & VICINITY MAP

FILE: 21-20-010_V-101
JUB PROJ. #: 20-21-010
DRAWN BY: KWC
DESIGN BY: CSP
CHECKED BY: CSP
ONE INCH
AT FULL SIZE, IF NOT ONE INCH, SCALE ACCORDINGLY
LAST UPDATED: 2/19/2021

SHEET NUMBER:
V-101

Plot Date:2/19/2021 9:31 AM Plotted By: Kurt Cox
Date Created:2/19/2021 \\JUB.COM\CENTRAL\CLIENTS\ID\MOSCOW\CITY\PROJECTS\21-20-010_SIXTHSTREETCROSSINGOVERPARADISECREEK\DESIGN\CAD\SHEET\21-20-010_V-101.DWG

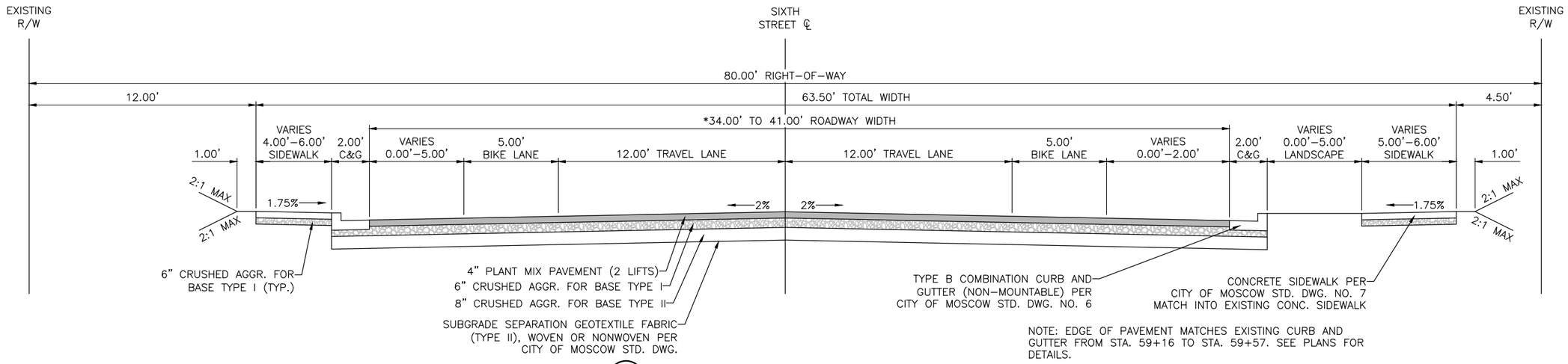

1 FULL TYPICAL SECTION – STA. 59+16 TO STA. 59+89
SCALE:N.T.S.

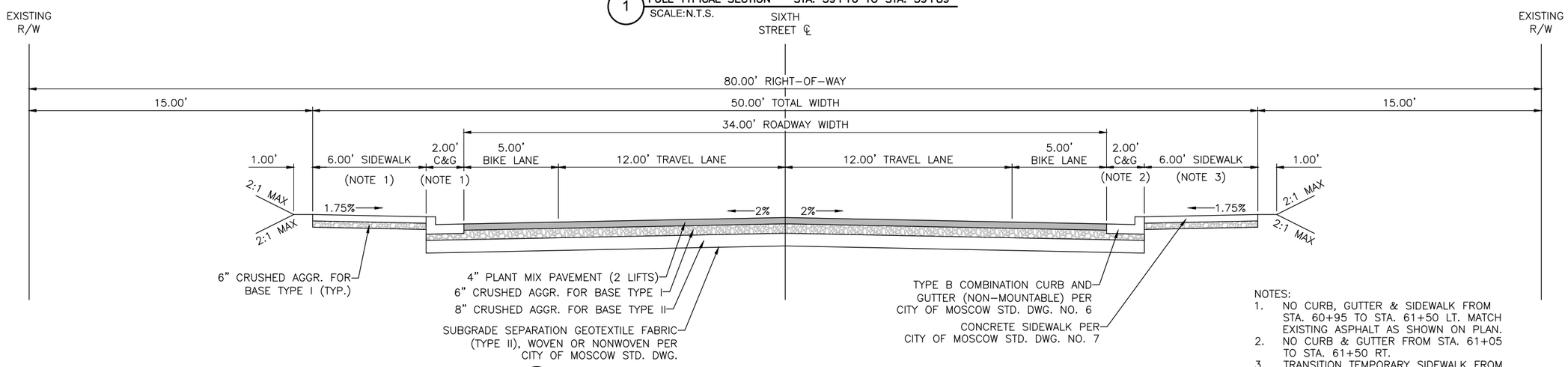

NOTES:
1. NO CURB, GUTTER & SIDEWALK FROM STA. 60+95 TO STA. 61+50 LT. MATCH EXISTING ASPHALT AS SHOWN ON PLAN.
2. NO CURB & GUTTER FROM STA. 61+05 TO STA. 61+50 RT.
3. TRANSITION TEMPORARY SIDEWALK FROM +1.75% TO −1.75% FROM STA. 61+00 TO STA. 61+25.

2 TYPICAL SECTION – STA. 59+89 TO STA. 60+10 & STA. 60+90 TO STA. 61+50
SCALE:N.T.S.

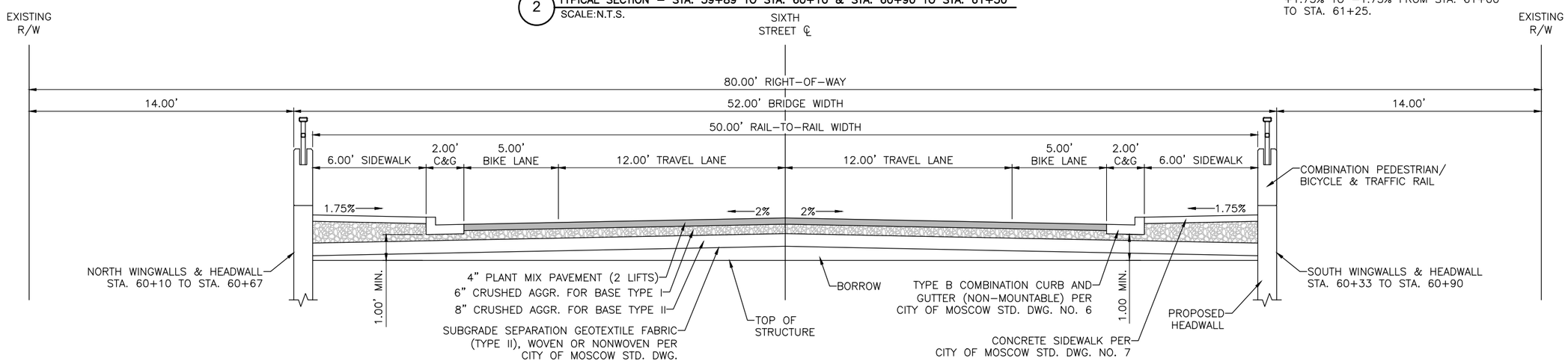

3 STRUCTURE TYPICAL SECTION – STA. 60+10 TO STA. 60+90
SCALE:N.T.S.

J-U-B ENGINEERS, INC.
J-U-B ENGINEERS, INC.
201 South Jackson Street
Moscow, ID 83843
Phone: 208.746.9010
www.jub.com

PROFESSIONAL ENGINEER LICENSED 16311 STATE OF IDAHO CHRISTOPHER S. PETTGREW 02/19/21

REUSE OF DRAWINGS
J-U-B SHALL RETAIN ALL COMMON LAW, STATUTORY, COPYRIGHT AND OTHER RESERVED RIGHTS OF THESE DRAWINGS, AND THE SAME SHALL NOT BE REUSED WITHOUT J-U-B'S PRIOR WRITTEN CONSENT. ANY REUSE WITHOUT WRITTEN CONSENT BY J-U-B WILL BE AT CLIENTS SOLE RISK AND WITHOUT LIABILITY OR LEGAL EXPOSURE TO J-U-B

NO.	DESCRIPTION	BY	APR.	DATE
	REVISION			

SIXTH STREET CROSSING OVER PARADISE CREEK CITY OF MOSCOW

TYPICAL SECTIONS

FILE: 21-20-010_C-00X
JUB PROJ #: 20-21-010
DRAWN BY: KWC
DESIGN BY: CSP
CHECKED BY: CSP
ONE INCH
AT FULL SIZE, IF NOT ONE INCH, SCALE ACCORDINGLY
LAST UPDATED: 2/19/2021
SHEET NUMBER:
C-001

Plot Date:2/19/2021 3:10 PM Plotted By: Kurt Cox
Date Created:2/19/2021 \\JUB.COM\CENTRAL\CLIENTS\ID.MOSCOW\CITY\PROJECTS\21-20-010_SIXTHSTREETCROSSINGOVERPARADISECREEK\DESIGN\CAD\SHEET\21-20-010_C-00X.DWG

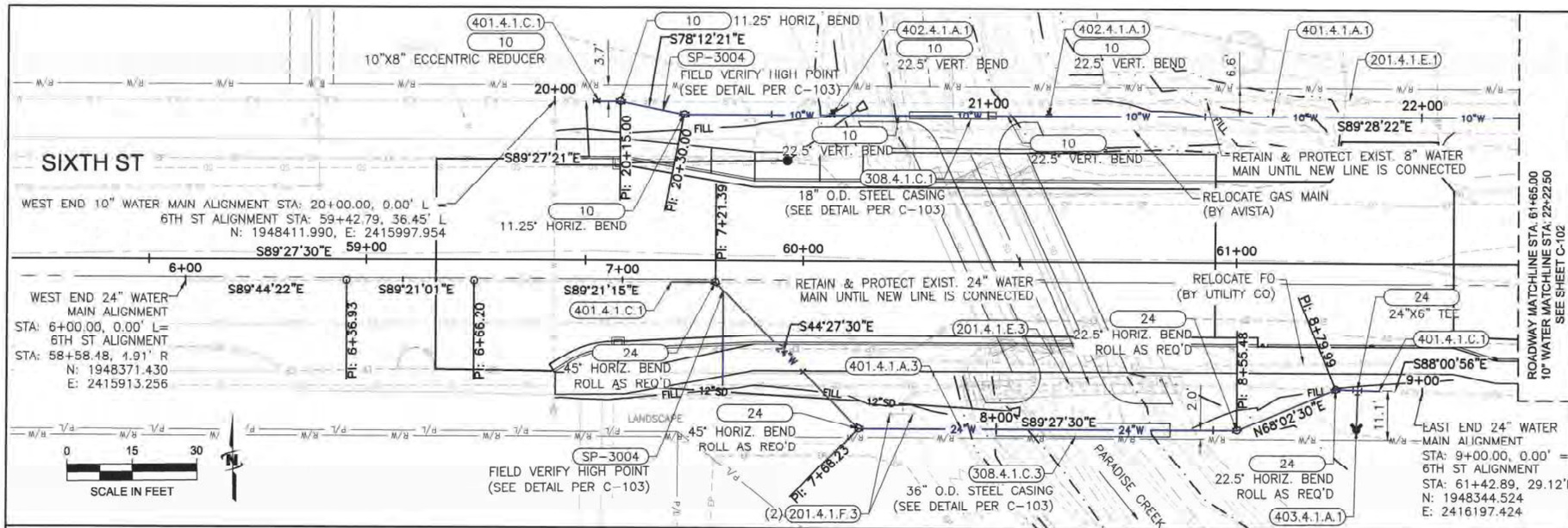

NOTES:

1. REFER TO PROJECT MANUAL FOR WATER MAIN INSTALLATION WORK SEQUENCING PLAN.
2. CONTRACTOR SHALL NOT OPERATE ANY EXISTING VALVES. COORDINATE WITH CITY WATER DEPARTMENT FOR VALVE OPERATIONS.

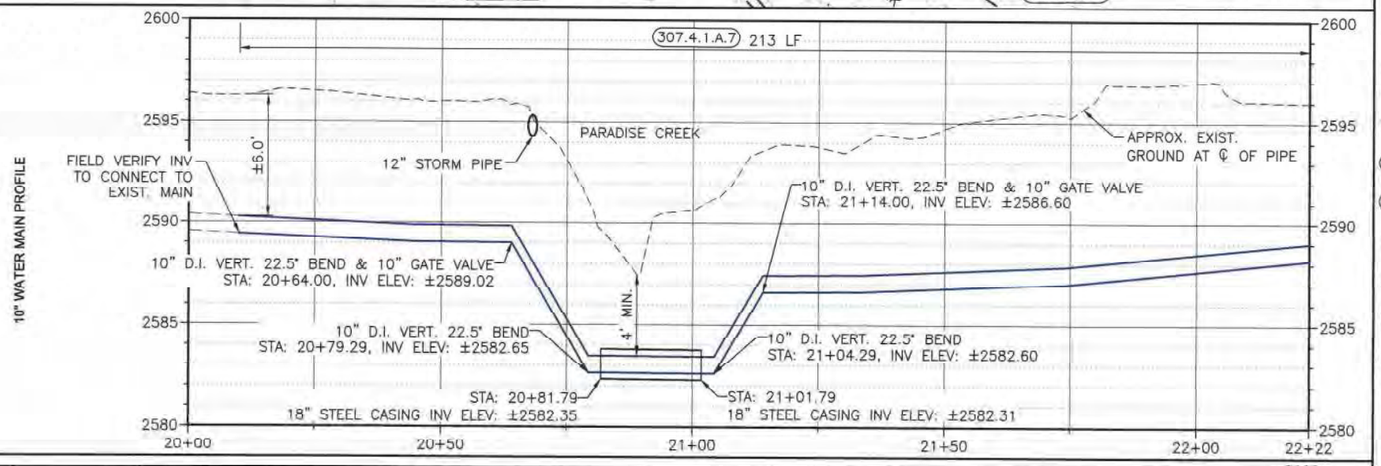

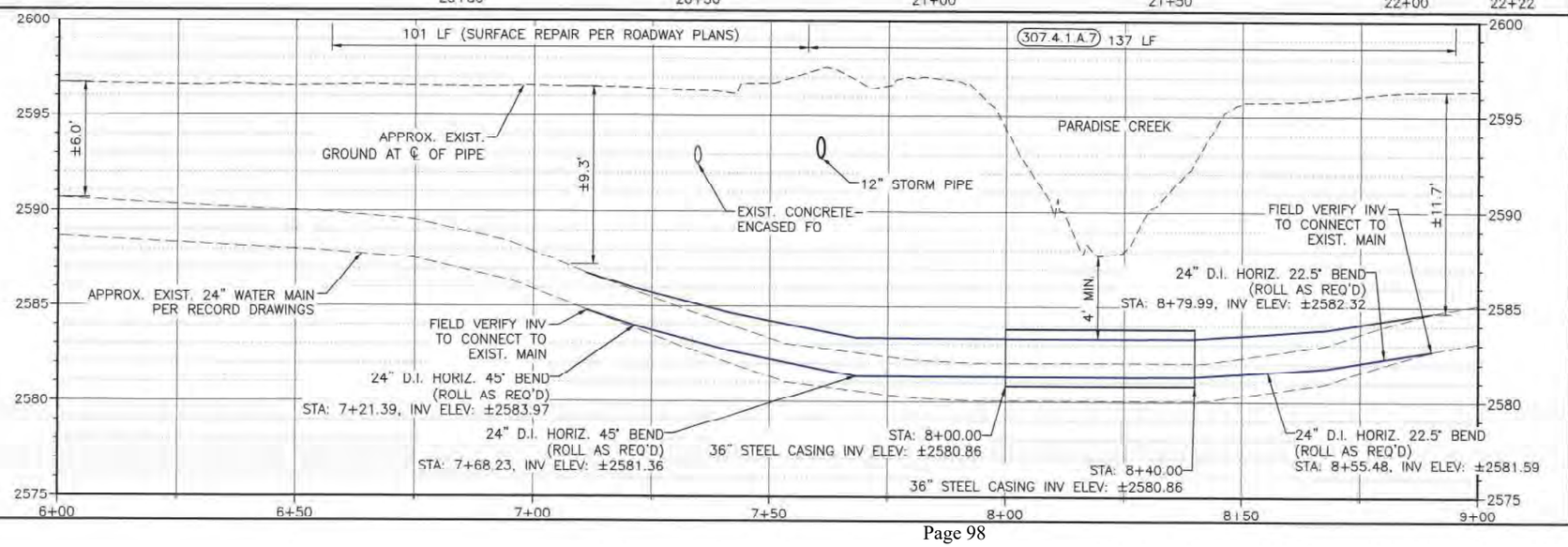

201.4.1.E.1	**REMOVAL OF EXISTING WATER MAIN - SIZE 8"**
213 LF	Sta. 20+10.00, 0.00' Lt (Sta. 59+52.80, 36.45' Lt) to Sta. 22+22.50, 3.33' Lt (Sta. 61+65.00, 36.90' Lt)
201.4.1.E.3	**REMOVAL OF EXISTING WATER MAIN - SIZE 24"**
163 LF	Sta. 7+11.39, 0.00' Rt (Sta. 59+69.87, 4.86' Rt) to Sta. 8+89.99, 0.00' Rt (Sta. 61+32.89, 28.87' Rt)
201.4.1.F.3	**REMOVAL OF EXISTING HYDRANT**
1 EA	Sta. 7+75.40, 3.41' Lt (Sta. 60+20.16, 34.59' Rt)
1 EA	Sta. 7+80.68, 3.33' Lt (Sta. 60+25.44, 34.67' Rt)
307.4.1.A.7	**MISC. SURFACE RESTORATION (NATURAL GROUND) - REFER TO PROJECT MANUAL FOR REQUIREMENTS**
137 LF	Sta. 7+58.00 (Sta. 60+05.76, 30.77' Rt) to Sta. 8+95.00 (Sta. 61+37.89, 29.00' Rt)
213 LF	Sta. 20+10.00 (Sta. 59+52.80, 36.45' Lt) to Sta. 22+22.50 (Sta. 65+00.00, 33.53' Lt)
308.4.1.C.1	**STEEL CASING SLEEVE - SIZE 18" (0.375" THICK)**
20 LF	Sta. 20+81.79 to Sta. 21+01.79
308.4.1.C.3	**STEEL CASING SLEEVE - SIZE 36" (0.375" THICK)**
40 LF	Sta. 8+00.00 to Sta. 8+40.00
401.4.1.A.1	**WATER MAIN PIPE - SIZE 10" - TYPE C900, CLASS 235 PVC (DR18)**
213 LF	Sta. 20+10.00 (Sta. 59+52.80, 36.45' Lt) to Sta. 22+22.50 (Sta. 65+00.00, 33.53' Lt)
10	**10" WATER MAIN FITTING (INCIDENTAL)**
1 EA (10"X8" RED)	Sta. 20+10.00 (Sta. 59+52.80, 36.45' Lt)
1 EA (11.25° BEND)	Sta. 20+15.00 (Sta. 59+57.80, 36.45' Lt)
1 EA (11.25° BEND)	Sta. 20+30.00 (Sta. 59+72.51, 33.53' Lt)
1 EA (22.5° BEND)	Sta. 20+64.00 (Sta. 60+06.51, 33.53' Lt)
1 EA (22.5° BEND)	Sta. 20+79.29 (Sta. 60+21.80, 33.54' Lt)
1 EA (22.5° BEND)	Sta. 21+04.29 (Sta. 60+46.79, 33.54' Lt)
1 EA (22.5° BEND)	Sta. 21+14.00 (Sta. 60+56.51, 33.55' Lt)
401.4.1.A.3	**WATER MAIN PIPE - SIZE 24" - TYPE C900, CLASS 235 PVC (DR18)**
179 LF	Sta. 7+11.39 (Sta. 59+69.87, 4.86' Rt) to Sta. 8+89.99 (Sta. 61+32.89, 28.87' Rt)
24	**24" WATER MAIN FITTING (INCIDENTAL)**
1 EA (45° BEND)	Sta. 7+21.39 (Sta. 59+79.87, 4.88' Rt)
1 EA (45° BEND)	Sta. 7+68.23 (Sta. 60+12.99, 38.00' Rt)
1 EA (22.5° BEND)	Sta. 8+55.48 (Sta. 61+00.25, 38.00' Rt)
1 EA (22.5° BEND)	Sta. 8+79.99 (Sta. 61+22.89, 28.62' Rt)
1 EA (24"X6" TEE)	Sta. 8+84.99 (Sta. 61+27.89, 28.75' Rt)
401.4.1.C.1	**CONNECT TO EXISTING WATER MAIN**
1 EA	Sta. 7+11.39 (Sta. 59+69.87, 4.86' Rt)
1 EA	Sta. 8+89.99 (Sta. 61+32.89, 28.87' Rt)
1 EA	Sta. 20+10.00 (Sta. 59+52.80, 36.45' Lt)
402.4.1.A.1	**GATE VALVE - SIZE 10"**
1 EA	Sta. 20+64.00 (Sta. 60+06.51, 33.53' Lt)
1 EA	Sta. 21+14.00 (Sta. 60+56.51' 33.55' Lt)
403.4.1.A.1	**HYDRANT**
1 EA	Sta. 8+84.99, 9.00' Rt (Sta. 61+27.70, 37.74' Rt)
SP-3004	**AIR RELEASE VALVE ASSEMBLY**
1 EA	Sta. 7+24.00 (Sta. 59+81.71, 6.73' Rt)
1 EA	Sta. 20+25.00 (Sta. 59+67.61, 34.50' Rt)

JUB
J-U-B ENGINEERS, INC.
J-U-B ENGINEERS, INC.
201 South Jackson Street
Moscow, ID 83843
Phone: 208.746.9010
www.jub.com

PROFESSIONAL ENGINEER 8647 STATE OF IDAHO BRAD R. WATSON
2-19-21

REUSE OF DRAWINGS
J-U-B SHALL RETAIN ALL COMMON LAW, STATUTORY, COPYRIGHT AND OTHER RESERVED RIGHTS OF THESE DRAWINGS, AND THE SAME SHALL NOT BE REUSED WITHOUT J-U-B'S PRIOR WRITTEN CONSENT. ANY REUSE WITHOUT WRITTEN CONSENT SHALL BE AT THE CLIENT'S SOLE RISK AND WITHOUT LIABILITY OR LEGAL EXPOSURE TO J-U-B.

NO.	DESCRIPTION	BY	APPR.	DATE
	REVISION			

SIXTH STREET CROSSING OVER PARADISE CREEK
CITY OF MOSCOW

WATER MAIN PLAN & PROFILE

FILE: 21-20-010_C-10X-2
JUB PROJ # : 20-21-010
DRAWN BY: KWC
DESIGN BY: CAS
CHECKED BY: BRW
ONE INCH AT FULL SIZE, IF NOT ONE INCH, SCALE ACCORDINGLY
LAST UPDATED: 2/19/2021

SHEET NUMBER:
C-101

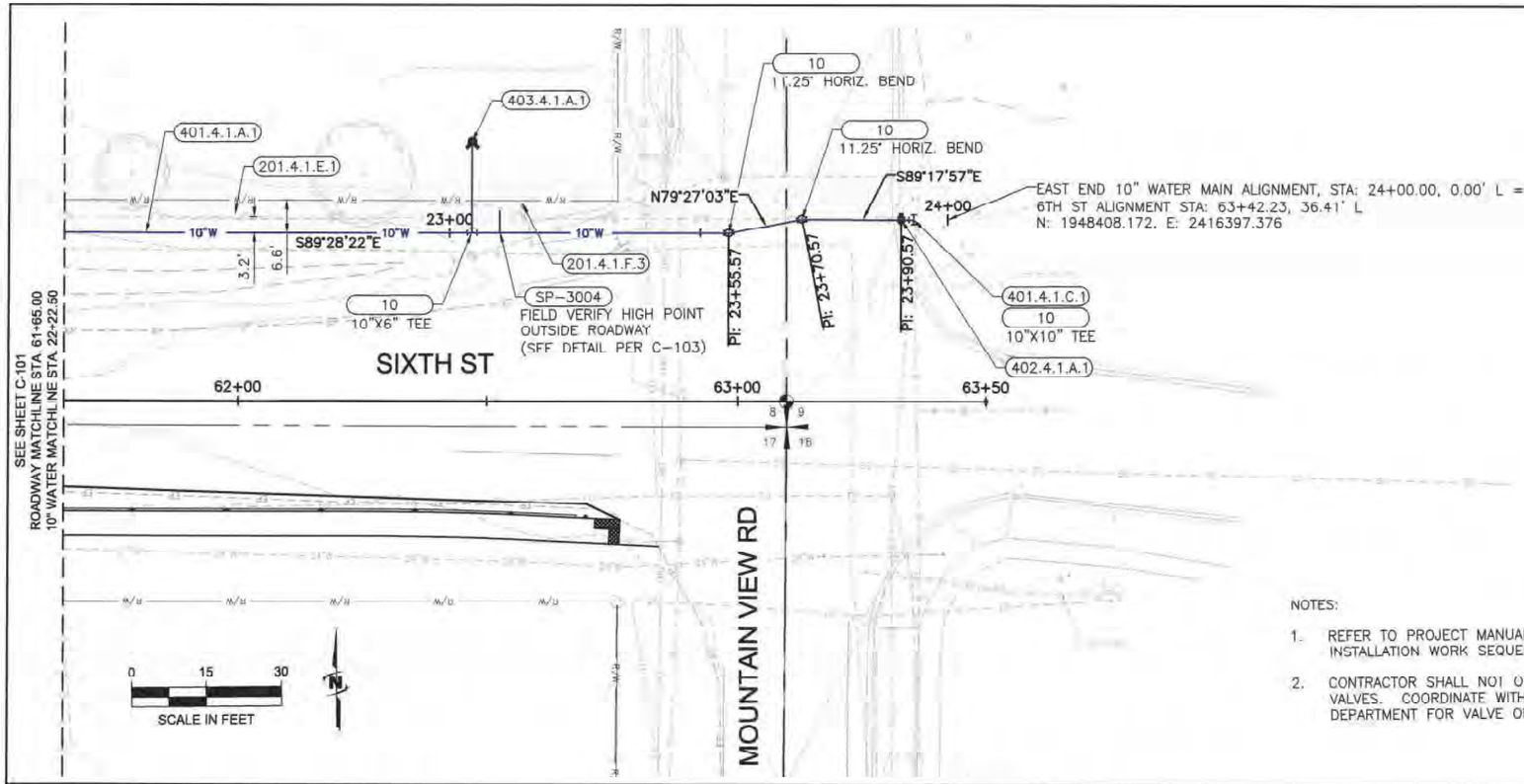

NOTES:

1. REFER TO PROJECT MANUAL FOR WATER MAIN INSTALLATION WORK SEQUENCING PLAN.
2. CONTRACTOR SHALL NOT OPERATE ANY EXISTING VALVES. COORDINATE WITH CITY WATER DEPARTMENT FOR VALVE OPERATIONS.

201.4.1.E.1	REMOVAL OF EXISTING WATER MAIN - SIZE 8"
171 LF	Sta. 22+22.50, 3.33' Lt (Sta. 61+65.00, 36.90' Lt) to Sta. 23+93.07 (Sta. 63+35.30, 36.43' Lt)
201.4.1.F.3	REMOVAL OF EXISTING HYDRANT
1 EA	Sta. 23+14.42, 5.88' Lt (Sta. 62+56.93, 39.48' Lt)
307.4.1.A.7	MISC. SURFACE RESTORATION (NATURAL GROUND) - REFER TO PROJECT MANUAL FOR REQUIREMENTS
93 LF	Sta. 22+22.50 (Sta. 65+00.00, 33.53' Lt) to Sta. 23+15.00 (Sta. 62+57.51, 33.60' Lt)
401.4.1.A.1	WATER MAIN PIPE - SIZE 10" - TYPE C900, CLASS 235 PVC (DR18)
171 LF	Sta. 22+22.50 (Sta. 65+00.00, 33.53' Lt) to Sta. 23+93.07 (Sta. 63+35.30, 36.43' Lt)
10	10" WATER MAIN FITTING (INCIDENTAL)
1 EA (10"X6" TEE)	Sta. 23+04.44 (Sta. 62+46.95, 33.59' Lt)
1 EA (11.25° BEND)	Sta. 23+55.57 (Sta. 62+98.08, 33.61' Lt)
1 EA (11.25° BEND)	Sta. 23+70.57 (Sta. 63+12.80, 36.49' Lt)
1 EA (10"X10" TEE)	Sta. 23+93.07 (Sta. 63+35.30, 36.43' Lt)
401.4.1.C.1	CONNECT TO EXISTING WATER MAIN
1 EA	Sta. 23+93.07 (Sta. 63+35.30, 36.43' Lt)
402.4.1.A.1	GATE VALVE - SIZE 10"
1 EA	Sta. 23+90.57 (Sta. 63+32.80, 36.44' Lt)
403.4.1.A.1	HYDRANT
1 EA	Sta. 23+04.44, 18.13' Lt (Sta. 62+46.95, 51.72' Lt)
SP-3004	AIR RELEASE VALVE ASSEMBLY
1 EA	Sta. 23+10.00 (Sta. 62+52.51, 33.60' Lt)

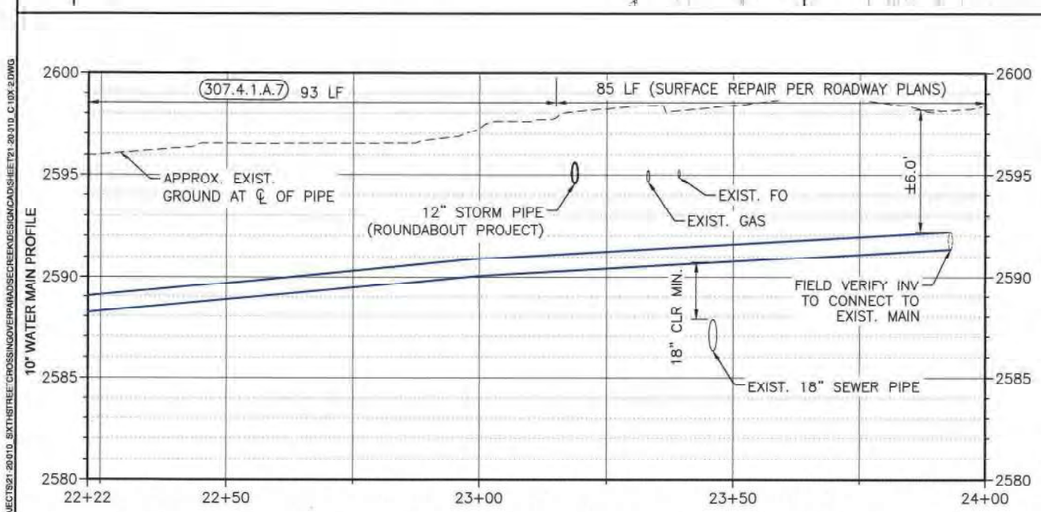

J-U-B ENGINEERS, INC.
J-U-B ENGINEERS, INC.
201 South Jackson Street
Moscow, ID 83843
Phone: 208.746.9010
www.jub.com

PROFESSIONAL ENGINEER REGISTERED 8847 STATE OF IDAHO BRAD R. WATSON

2-19-21

REUSE OF DRAWINGS
J-U-B SHALL RETAIN ALL COMMON LAW, STATUTORY, COPYRIGHT AND OTHER RESERVED RIGHTS OF THESE DRAWINGS, AND THE SAME SHALL NOT BE USED OR REPRODUCED FOR ANY PURPOSE WHATSOEVER, NOR SHALL ANY REUSE WITHOUT WRITTEN CONSENT BY J-U-B WILL BE AT CLIENT'S SOLE RISK AND WITHOUT LIABILITY OR LEGAL EXPOSURE TO J-U-B.

NO.	DESCRIPTION	BY	APR	DATE

REVISION

SIXTH STREET CROSSING OVER PARADISE CREEK
CITY OF MOSCOW

WATER MAIN PLAN & PROFILE

FILE: 21-20-010_C-10X-2
JUB PROJ. #: 20-21-010
DRAWN BY: KWC
DESIGN BY: CAS
CHECKED BY: BRW
ONE INCH
AT FULL SIZE, IF NOT ONE INCH, SCALE ACCORDINGLY
LAST UPDATED: 2/19/2021

SHEET NUMBER:
C-102

Plot Date:2/19/2021 10:41 AM Plotted By: Kurt Cox
Date Created:2/19/2021 \\JUB.CO\ACENTRAL\CLIENTS\D\MOSCOW\CITY\PROJECTS\21-20-010_SIXTHSTREET CROSSINGOVERPARADISECREEK\DESIGN\CAD\SHEET\21-20-010_C-10X-2.DWG

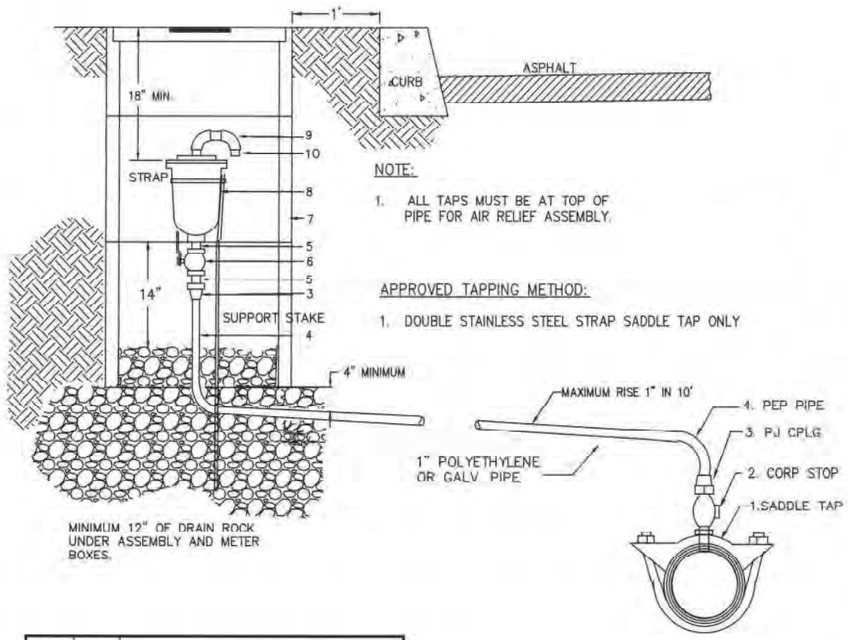

NOTE:

1. ALL TAPS MUST BE AT TOP OF PIPE FOR AIR RELIEF ASSEMBLY.

APPROVED TAPPING METHOD:

1. DOUBLE STAINLESS STEEL STRAP SADDLE TAP ONLY

ITEM NO.	NO. REQ.	DESCRIPTION
1	1	ROMAC DOUBLE STRAP TAPPING SADDLE
2	1	1" BRONZE CORPORATION STOP
3	2	1" PACK JOINT AS REQUIRED
4	1	1" IPS POLYETHELENE OR GALV. PIPE
5	4	1" x 2" GALVANIZED NIPPLES
6	1	1" APPROVED BALL VALVE
7	4	ARMORCAST 12X20 RPM – MIN 3 REQ. PLUS 1 WITH LID
8	1	APCO (REGULAR) COMBINATION AIR RELEASE VALVE (150 PSI)
9	2	1" 90 DEGREE GALVANIZED ELBOWS
10	1	INSECT SCREEN

ISPWC STANDARD # 408
AIR RELIEF VALVES

UNLESS OTHERWISE SPECIFIED, THESE APPURTENANCES SHALL BE OF THE MATERIAL SPECIFIED OR SHOWN ON THE PLANS AND SHALL MEET PRESSURE REQUIREMENTS EQUAL TO OR EXCEEDING THE MAIN INSTALLATION AND SHALL BE NSF-61 CERTIFIED.

W-7 1" AIR RELIEF ASSEMBLY

SCALE: NTS

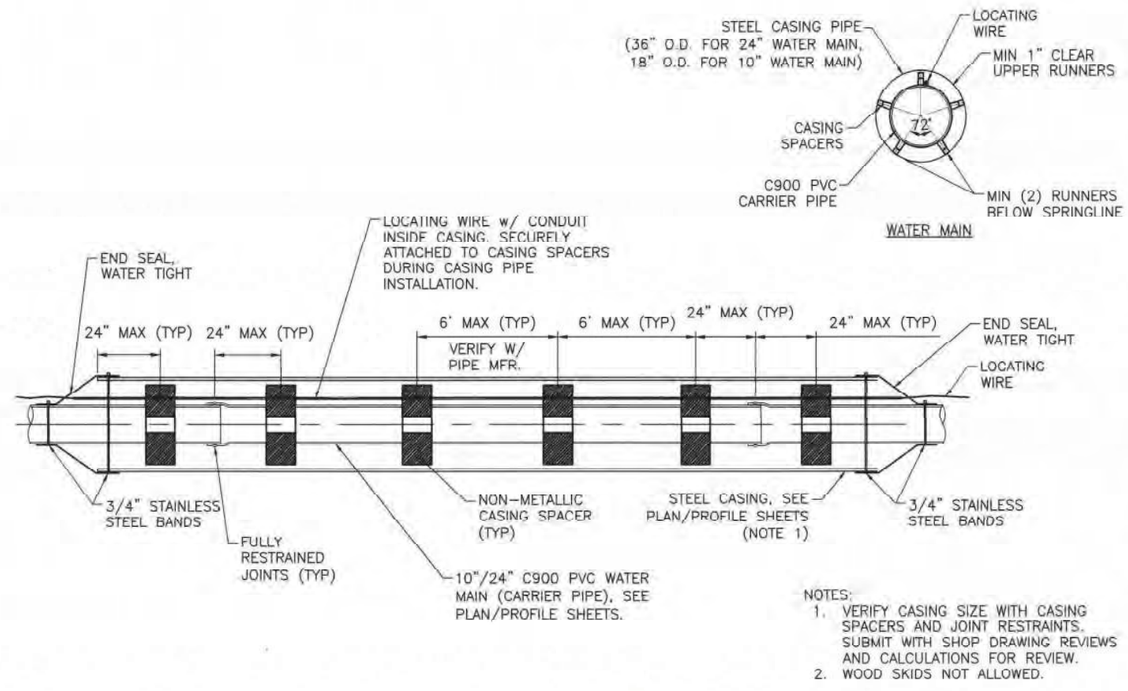

NOTES:

1. VERIFY CASING SIZE WITH CASING SPACERS AND JOINT RESTRAINTS. SUBMIT WITH SHOP DRAWING REVIEWS AND CALCULATIONS FOR REVIEW.
2. WOOD SKIDS NOT ALLOWED.

STEEL CASING SLEEVE AT PARADISE CREEK CROSSING - WATER MAIN

SCALE: NTS

J-U-B ENGINEERS, INC.

J-U-B ENGINEERS, INC.
201 South Jackson Street
Moscow, ID 83843
Phone: 208.745.9010
www.jub.com

PROFESSIONAL ENGINEER REGISTERED 8847 STATE OF IDAHO BRAD R. WATSON

2-19-21

REUSE OF DRAWINGS
J-U-B SHALL RETAIN ALL COMMON LAW, STATUTORY, COPYRIGHT AND OTHER RESERVED RIGHTS OF THESE DRAWINGS, AND THE SAME SHALL NOT BE USED OR REPRODUCED WITHOUT CONSENT. ANY REUSE WITHOUT WRITTEN CONSENT BY J-U-B WILL BE AT CLIENT'S SOLE RISK AND WITHOUT LIABILITY OR LEGAL EXPOSURE TO J-U-B.

NO.	DESCRIPTION	BY	APR.	DATE
	REVISION			

SIXTH STREET CROSSING OVER PARADISE CREEK
CITY OF MOSCOW

WATER MAIN DETAILS

FILE: 21-20-010_C-10X.2
JUB PROJ. #: 20-21-010
DRAWN BY: HWO
DESIGN BY: CAS
CHECKED BY: BRW
ONE INCH
AT FULL SIZE, IF NOT ONE INCH, SCALE ACCORDINGLY
LAST UPDATED: 2/19/2021

SHEET NUMBER: C-103

Plot Date:2/19/2021 10:41 AM Plotted By: Kurt Cox
Date Created:2/19/2021 \\JUB.COM\CENTRAL\CLIENTS\IDMO\SCOWCITY\PROJECTS\21-20-010_SIXTHSTREET-CROSSINGOVERPARADISECREEK\DESIGN\CAD\SHEETS\21-20-010_C-10X-2.DWG

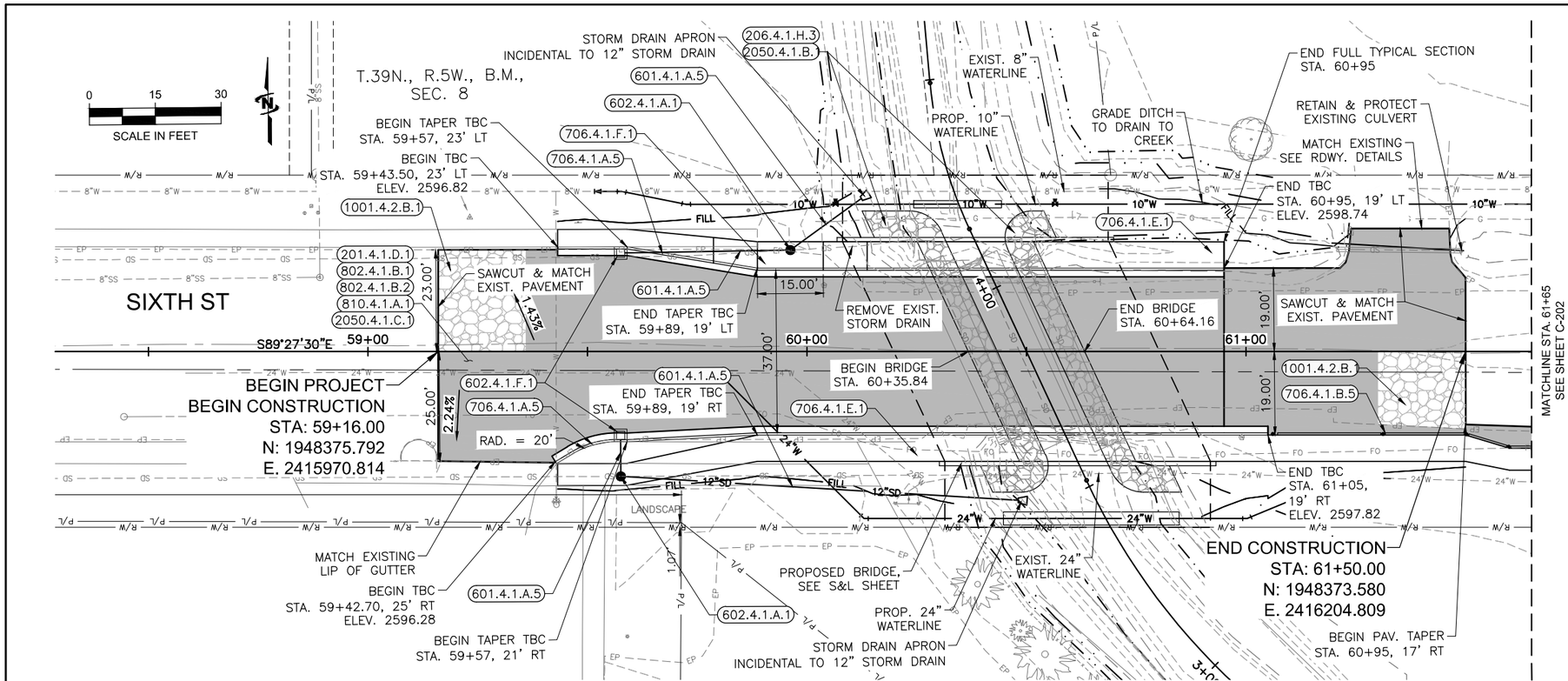

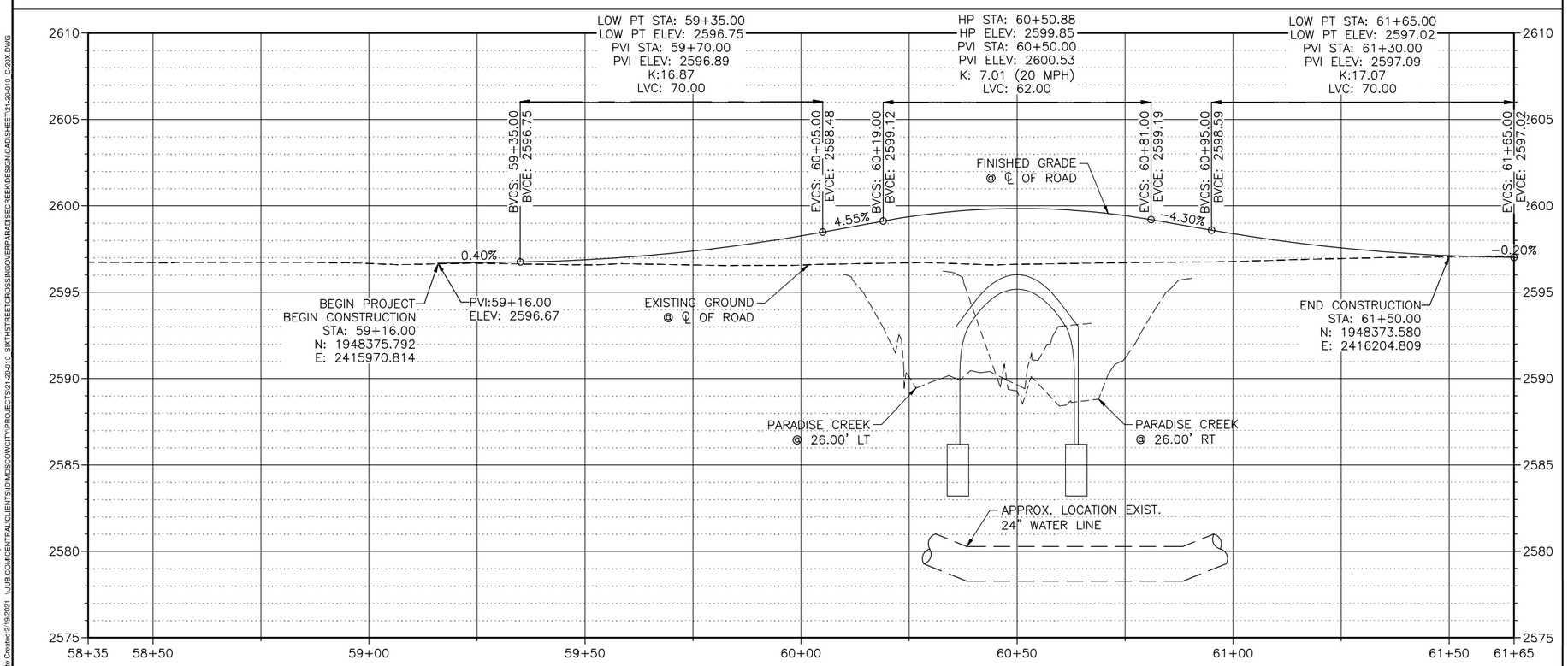

201.4.1.D.1	REMOVAL OF BITUMINOUS SURFACE
710 SY	Sta. 59+16.00 to Sta. 61+65.00
206.4.1.H.3	LOOSE RIPRAP
110 CY	Sta. 60+13.00, 32.00 Lt to Sta. 60+54.00, 32.50' Rt
110 CY	Sta. 60+45.50, 32.00 Lt to Sta. 60+85.00, 32.50' Rt
601.4.1.A.5	12" STORM DRAIN PIPE, CLASS C-900 PVC
9 LF	Sta. 59+58.30, 19.25' Rt to Sta. 59+58.30, 28.40' Rt
90 LF	Sta. 59+58.30, 28.40' Rt to Sta. 60+47.80, 33.75' Rt
38 LF	Sta. 59+58.70, 22.35' Lt to Sta. 50.96.50, 23.00' Lt
20 LF	Sta. 59+96.50, 23.00' Lt to Sta. 60+12.75, 34.75' Lt
602.4.1.A.1	STORM DRAIN MANHOLE - TYPE A
1 EACH	Sta. 59+58.30, 28.40' Rt
1 EACH	Sta. 59+96.50, 23.00' Lt
602.4.1.F.1	CATCH BASIN - TYPE I
1 EACH	Sta. 59+58.00, 19.25' Rt
1 EACH	Sta. 59+58.00, 22.35' Lt
706.1.4.A.3	6 INCH VERTICAL CURB (NO GUTTER) "TYPE A"
45.5 LF	Sta. 6105.00, 19.00' Rt to Sta. 61+65.00, 21.50' Rt
706.1.4.A.5	STANDARD 6 INCH VERTICAL CURB AND GUTTER
162.5 LF	Sta. 59+42.70, 25.50' Rt to Sta. 61+05.00, 19.00' Rt
151.5 LF	Sta. 59+43.50, 24.00' Lt to Sta. 60+95.00, 19.00' Lt
706.1.E.1	CONCRETE SIDEWALKS, THICKNESS 5"
135 SY	Sta. 59+42.70, 30.50' Rt to Sta. 61+65.00, 25.00' Rt
93 SY	Sta. 59+43.50, 29.00' Lt to Sta. 60+95.00, 25.00' Lt
706.1.F.1	CONCRETE DRIVEWAY APPROACH (6" THICK)
25 SY	Sta. 59+96.50, 25.00' Lt
802.4.1.B.1	CRUSHED AGGREGATE FOR BASE TYPE I
412 TON	Sta. 59+16.00 to Sta. 61+65.00
802.4.1.B.2	CRUSHED AGGREGATE FOR BASE TYPE II
548 TON	Sta. 59+16.00 to Sta. 61+65.00
810.4.1.A.1	PLANT MIX PAVEMENT
223 TON	Sta. 59+16.00 to Sta. 61+65.00
1001.4.2.B.1	STABILIZED CONSTRUCTION ENTRANCE
1 EACH	Sta. 59+16.00 to Sta. 59+36.00, Lt
1 EACH	Sta. 61+30.00 to Sta. 61+50.00, Rt
2050.4.1.B.1	RIPRAP/EROSION CONTROL GEOTEXTILE
96 SY	Sta. 60+13.00, 32.00 Lt to Sta. 60+54.00, 32.50' Rt
96 SY	Sta. 60+45.50, 32.00 Lt to Sta. 60+85.00, 32.50' Rt
2050.4.1.C.1	SUBGRADE SEPARATION GEOTEXTILE
1324 SY	Sta. 59+16.00 to Sta. 61+65.00

LEGEND

PLANT MIX PAVEMENT

J-U-B ENGINEERS, INC.
J-U-B ENGINEERS, INC.
201 South Jackson Street
Moscow, ID 83843
Phone: 208.746.9010
www.jub.com

PROFESSIONAL ENGINEER LICENSED 16311 STATE OF IDAHO CHRISTOPHER S. PETTGREW

REUSE OF DRAWINGS
J-U-B SHALL RETAIN ALL COMMON LAW, STATUTORY, COPYRIGHT AND OTHER RESERVED RIGHTS OF THESE DRAWINGS, AND THE SAME SHALL NOT BE REUSED WITHOUT J-U-B'S PRIOR WRITTEN CONSENT. ANY REUSE WITHOUT WRITTEN CONSENT BY J-U-B WILL BE AT CLIENTS SOLE RISK AND WITHOUT LIABILITY OR LEGAL EXPOSURE TO J-U-B.

NO.	DESCRIPTION	BY	APPR.	DATE
	REVISION			

SIXTH STREET CROSSING OVER PARADISE CREEK
CITY OF MOSCOW

PLAN & PROFILE

FILE: 21-20-010_C-20X
JUB PROJ. #: 20-21-010
DRAWN BY: KWC
DESIGN BY: CSP
CHECKED BY: CSP
ONE INCH
AT FULL SIZE, IF NOT ONE INCH, SCALE ACCORDINGLY
LAST UPDATED: 2/19/2021

SHEET NUMBER:
C-201

Plot Date:2/19/2021 3:11 PM Plotted By: Kurt Cox
Date Created:2/19/2021 \\JUB.COM\CENTRAL\CLIENTS\ID\MOSCOW\CITY\PROJECTS\21-20-010_SIXTHSTREETCROSSINGOVERPARADISECREEK\DESIGN\CAD\SHEET\21-20-010_C-20X.DWG

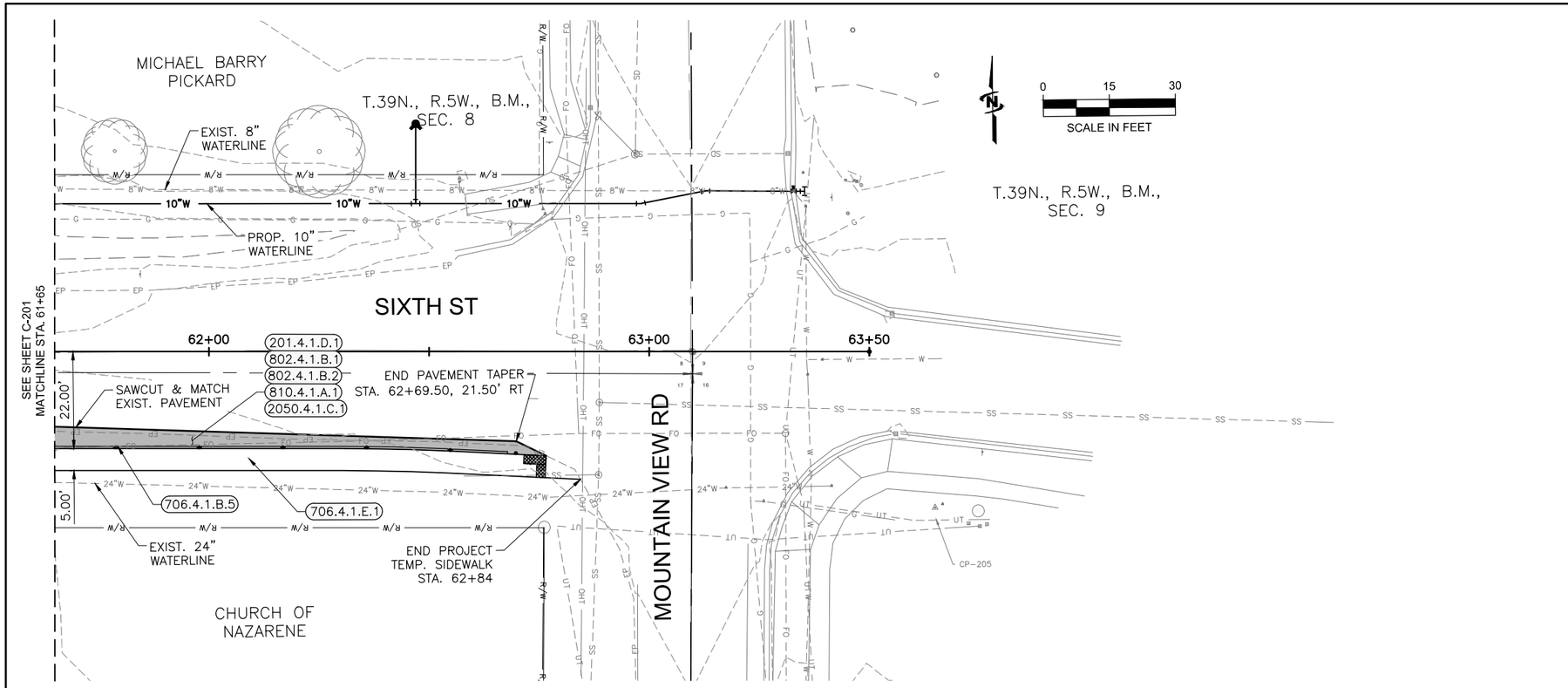

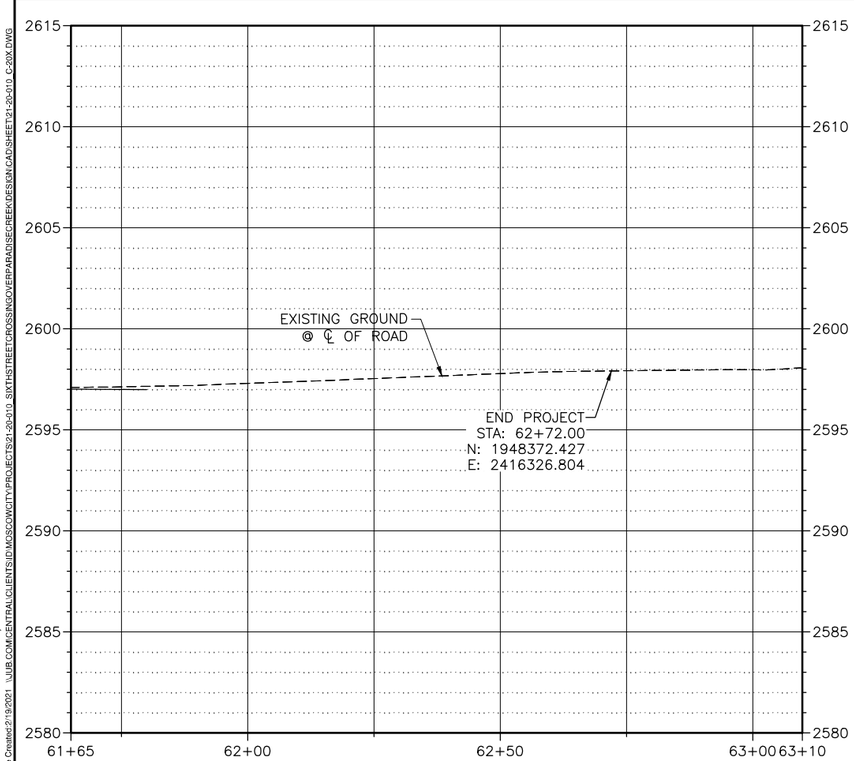

201.4.1.D.1	REMOVAL OF BITUMINOUS SURFACE
5 SY	Sta. 61+65.00 to Sta. 62+26.50
706.4.1.A.3	6 INCH VERTICAL CURB (NO GUTTER) "TYPE A"
97.5 LF	Sta. 61+65.00, 21.00' Rt to Sta. 62+67.60, 22.80' Rt
706.4.1.E.1	CONCRETE SIDEWALKS, THICKNESS 5"
59 SY	Sta. 61+65.00, 25.00' Rt to Sta. 62+83.00, 26.50' Rt
802.4.1.B.1	CRUSHED AGGREGATE FOR BASE TYPE I
24 TON	Sta. 61+65.00 to Sta. 62+83.00
802.4.1.B.2	CRUSHED AGGREGATE FOR BASE TYPE II
32 TON	Sta. 61+65.00 to Sta. 62+83.00
810.4.1.A.1	PLANT MIX PAVEMENT
2 TON	Sta. 61+65.00 to Sta. 62+26.50
2050.4.1.C.1	SUBGRADE SEPARATION GEOTEXTILE
73 SY	Sta. 61+65.00 to Sta. 62+26.50

LEGEND

PLANT MIX PAVEMENT

J-U-B ENGINEERS, INC.

J-U-B ENGINEERS, INC.
201 South Jackson Street
Moscow, ID 83843
Phone: 208.746.9010
www.jub.com

PROFESSIONAL ENGINEER LICENSED 16311 STATE OF IDAHO 02/19/2021 CHRISTOPHER S. PETTIGREW

REUSE OF DRAWINGS
J-U-B SHALL RETAIN ALL COMMON LAW, STATUTORY, COPYRIGHT AND OTHER RESERVED RIGHTS OF THESE DRAWINGS, AND THE SAME SHALL NOT BE REUSED WITHOUT J-U-B'S PRIOR WRITTEN CONSENT. ANY REUSE WITHOUT WRITTEN CONSENT BY J-U-B WILL BE AT CLIENTS SOLE RISK AND WITHOUT LIABILITY OR LEGAL EXPOSURE TO J-U-B.

NO.	DESCRIPTION	BY	APR.	DATE
	REVISION			

SIXTH STREET CROSSING OVER PARADISE CREEK
CITY OF MOSCOW

PLAN & PROFILE

FILE: 21-20-010_C-20X
JUB PROJ. #: 20-21-010
DRAWN BY: KWC
DESIGN BY: CSP
CHECKED BY: CSP
ONE INCH
AT FULL SIZE, IF NOT ONE INCH, SCALE ACCORDINGLY
LAST UPDATED: 2/19/2021

SHEET NUMBER:
C-202

Plot Date:2/19/2021 3:11 PM Plotted By: Kurt Cox
Date Created:2/19/2021 \\JUB.COM\CENTRAL\CLIENTS\ID\MOSCOW\CITY\PROJECTS\21-20-010_SIXTHSTREETCROSSINGOVERPARADISECREEK\DESIGN\CAD\SHEET\21-20-010_C-20X.DWG

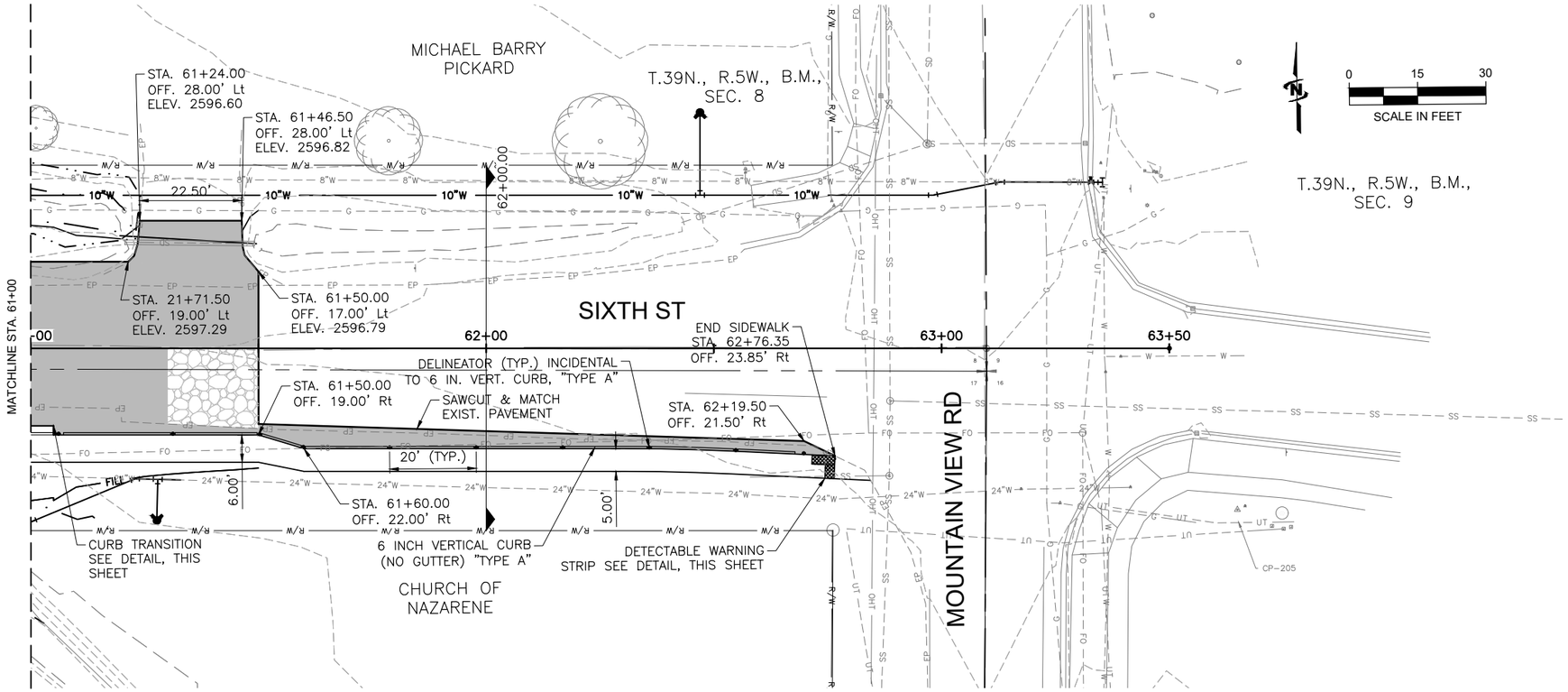

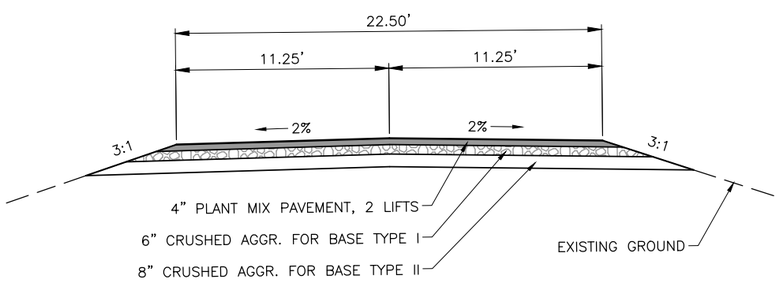

1 APPROACH TYPICAL SECTION
SCALE:N.T.S.

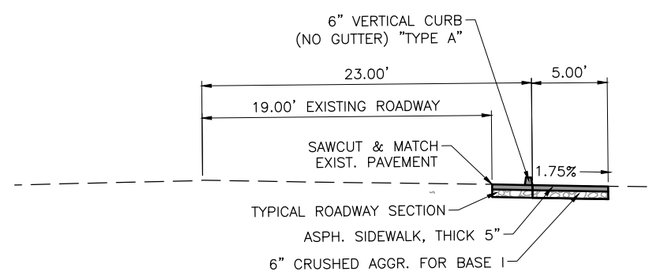

2 STA.62+00 CROSS SECTION
SCALE:N.T.S.

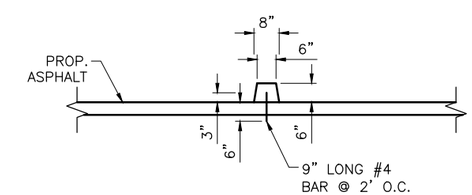

5 6 INCH VERTICAL CURB (NO GUTTER) "TYPE A"
SCALE:N.T.S.

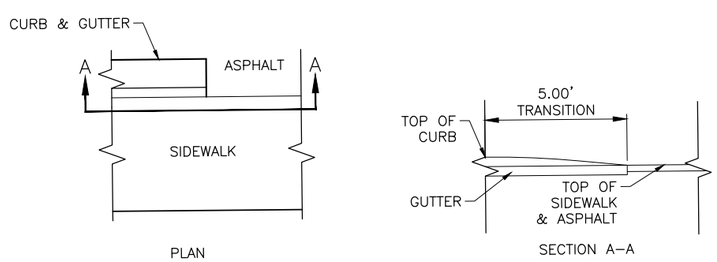

3 CURB TRANSITION DETAIL
SCALE:N.T.S.

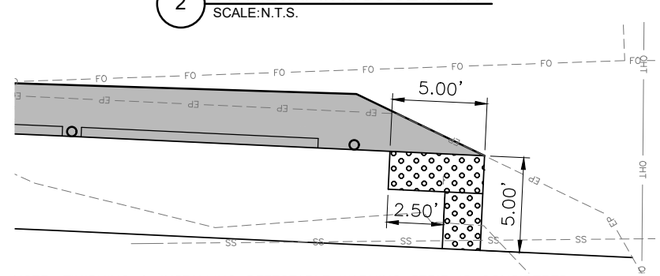

NOTE: FINISHING & INSTALLING DETECTABLE WARNING STRIP IS CONSIDERED INCIDENTAL TO SIDEWALK. NO SEPARATE PAYMENT WILL BE MADE.

4 DETECTABLE WARNING STRIP DETAIL
SCALE:N.T.S.

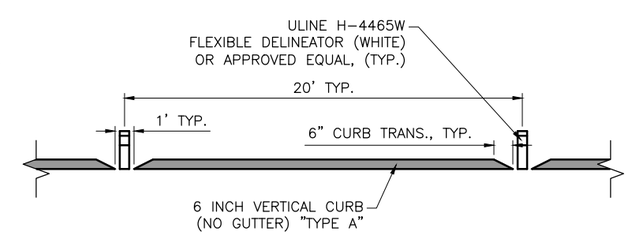

6 CURB & DELINEATOR TYPICAL
SCALE:N.T.S.

J-U-B ENGINEERS, INC.
J-U-B ENGINEERS, INC.
201 South Jackson Street
Moscow, ID 83843
Phone: 208.746.9010
www.jub.com

PROFESSIONAL ENGINEER LICENSED 16311 STATE OF IDAHO CHRISTOPHER S. PETTIGREW 02/19/21

REUSE OF DRAWINGS
J-U-B SHALL RETAIN ALL COMMON LAW, STATUTORY, COPYRIGHT AND OTHER RESERVED RIGHTS OF THESE DRAWINGS, AND THE SAME SHALL NOT BE REUSED WITHOUT J-U-B'S PRIOR WRITTEN CONSENT. ANY REUSE WITHOUT WRITTEN CONSENT BY J-U-B WILL BE AT CLIENTS SOLE RISK AND WITHOUT LIABILITY OR LEGAL EXPOSURE TO J-U-B.

NO.	DESCRIPTION	BY	APR.	DATE
	REVISION			

SIXTH STREET CROSSING OVER PARADISE CREEK
CITY OF MOSCOW

ROADWAY DETAILS

FILE: 21-20-010_C-301
JUB PROJ. #: 20-21-010
DRAWN BY: KWC
DESIGN BY: CSP
CHECKED BY: CSP
ONE INCH
AT FULL SIZE, IF NOT ONE INCH, SCALE ACCORDINGLY
LAST UPDATED: 2/22/2021

SHEET NUMBER:
C-301

Plot Date:2/22/2021 8:50 AM Plotted By: Kurt Cox
Date Created:2/19/2021 \\JUB.COM\CENTRAL\CLIENT SI\IDMOSCOW\CITY\PROJECTS\21-20-010_SIXTHSTREETCROSSINGOVERPARADISECREEK\DESIGN\CAD\SHEET\21-20-010_C-301.DWG

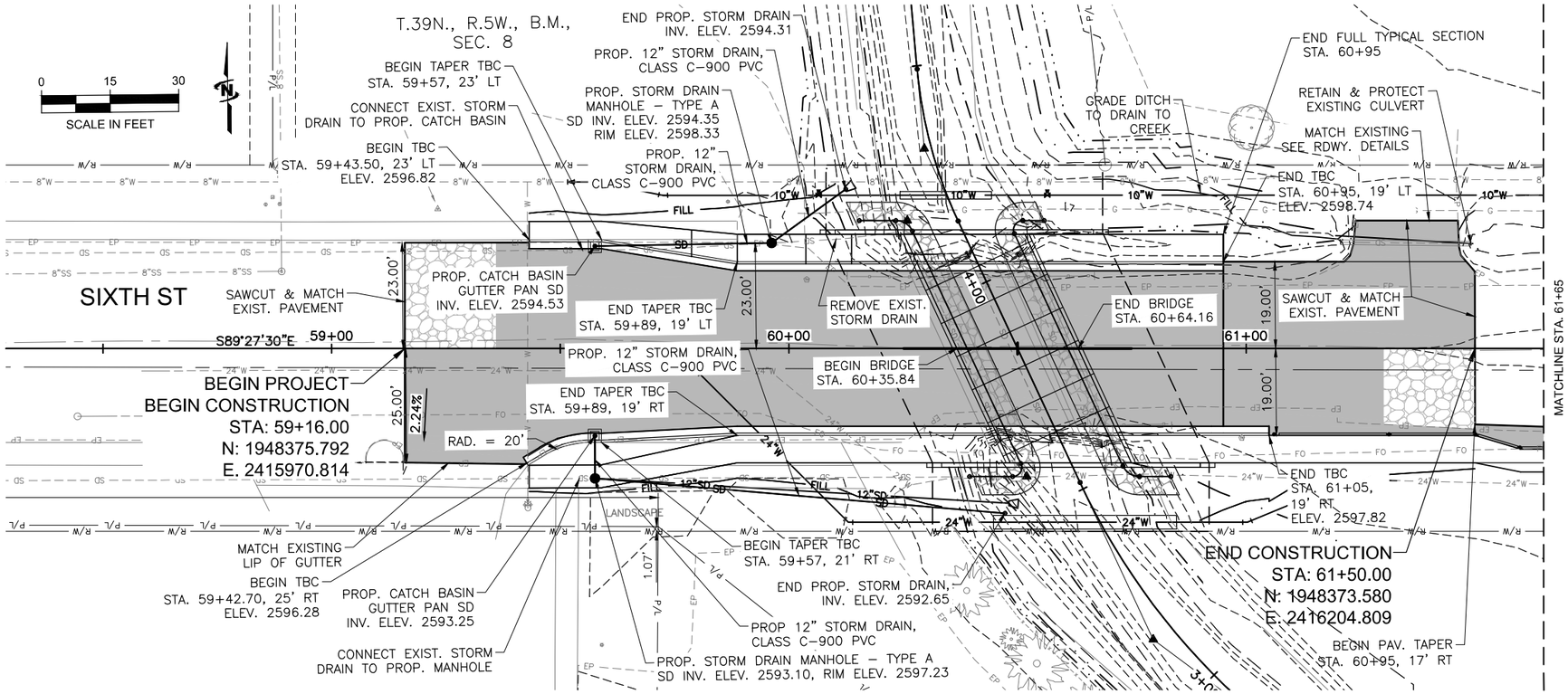

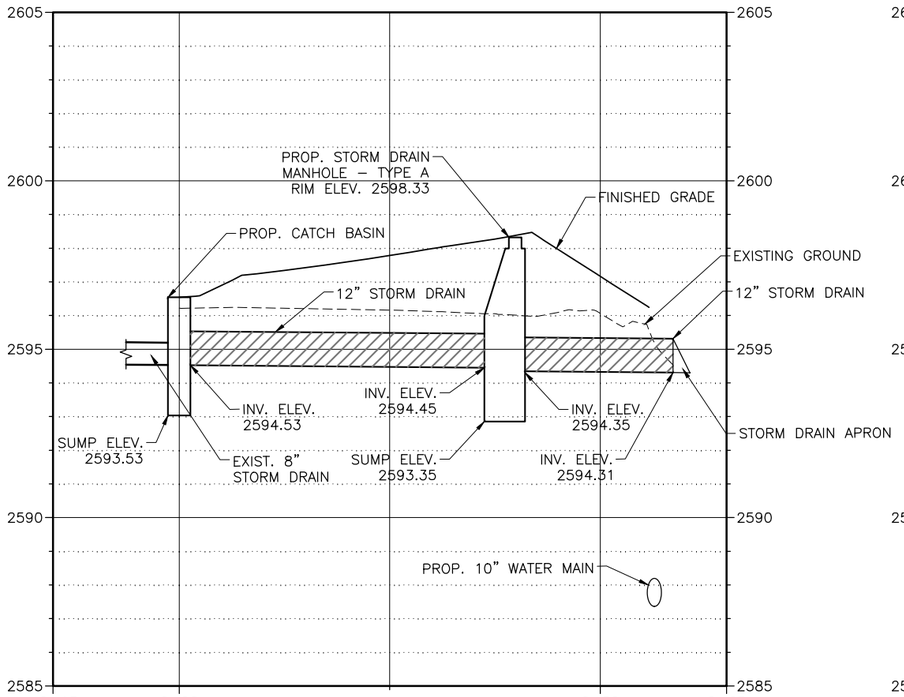

1 12" STORM DRAIN - NORTH
SCALE:N.T.S.

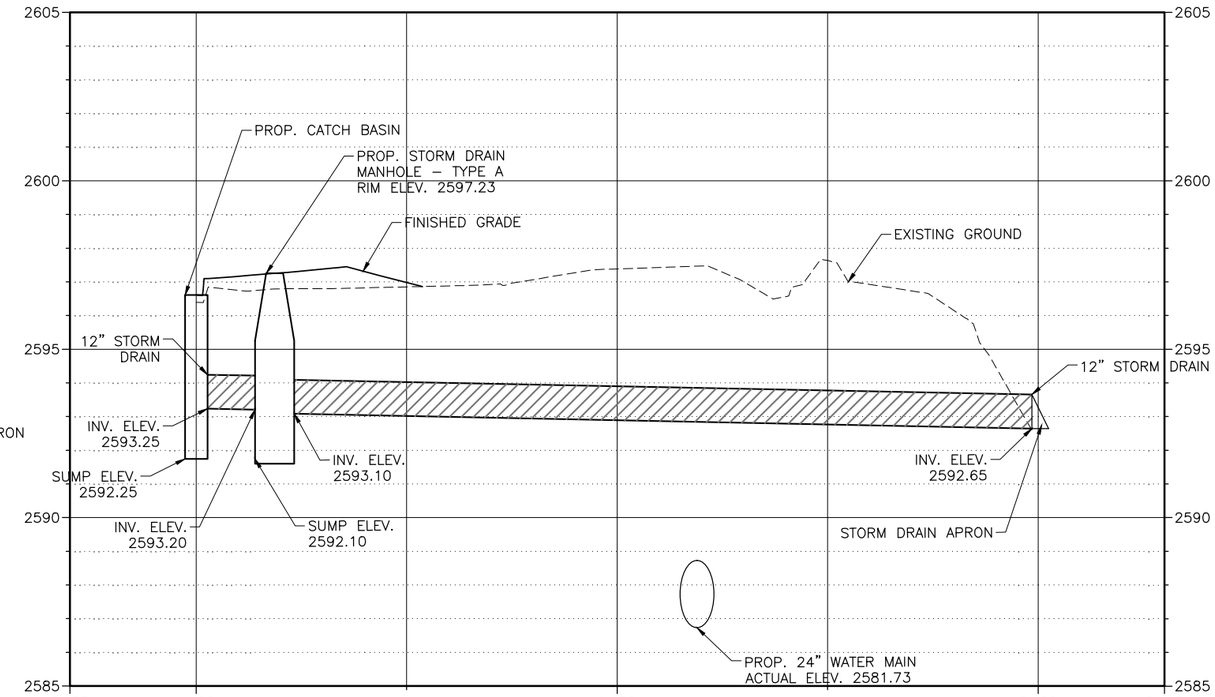

2 12" STORM DRAIN - SOUTH
SCALE:N.T.S.

J-U-B ENGINEERS, INC.

J-U-B ENGINEERS, INC.
201 South Jackson Street
Moscow, ID 83843
Phone: 208.746.9010
www.jub.com

PROFESSIONAL ENGINEER LICENSED 16311 STATE OF IDAHO CHRISTOPHER S. PETTIGREW 02/19/2021

REUSE OF DRAWINGS:
J-U-B SHALL RETAIN ALL COMMON LAW, STATUTORY, COPYRIGHT AND OTHER RESERVED RIGHTS OF THESE DRAWINGS, AND THE SAME SHALL NOT BE REUSED WITHOUT J-U-B'S PRIOR WRITTEN CONSENT. ANY REUSE WITHOUT WRITTEN CONSENT BY J-U-B WILL BE AT CLIENTS SOLE RISK AND WITHOUT LIABILITY OR LEGAL EXPOSURE TO J-U-B.

NO.	DESCRIPTION	BY	APPR.	DATE
	REVISION			

SIXTH STREET CROSSING OVER PARADISE CREEK
CITY OF MOSCOW

DRAINAGE DETAILS

FILE: 21-20-010_C-302
JUB PROJ. #: 20-21-010
DRAWN BY: KWC
DESIGN BY: CSP
CHECKED BY: CSP
ONE INCH
AT FULL SIZE, IF NOT ONE INCH, SCALE ACCORDINGLY
LAST UPDATED: 2/19/2021

SHEET NUMBER:
C-302

Plot Date:2/19/2021 3:12 PM Plotted By: Kurt Cox
Date Created:2/19/2021 \\JUB.COM\CENTRAL\CLIENTS\ID\MOSCOW\CITY\PROJECTS\21-20-010_SIXTHSTREETCROSSINGOVERPARADISECREEK\DESIGN\CAD\SHEET\21-20-010_C-302.DWG

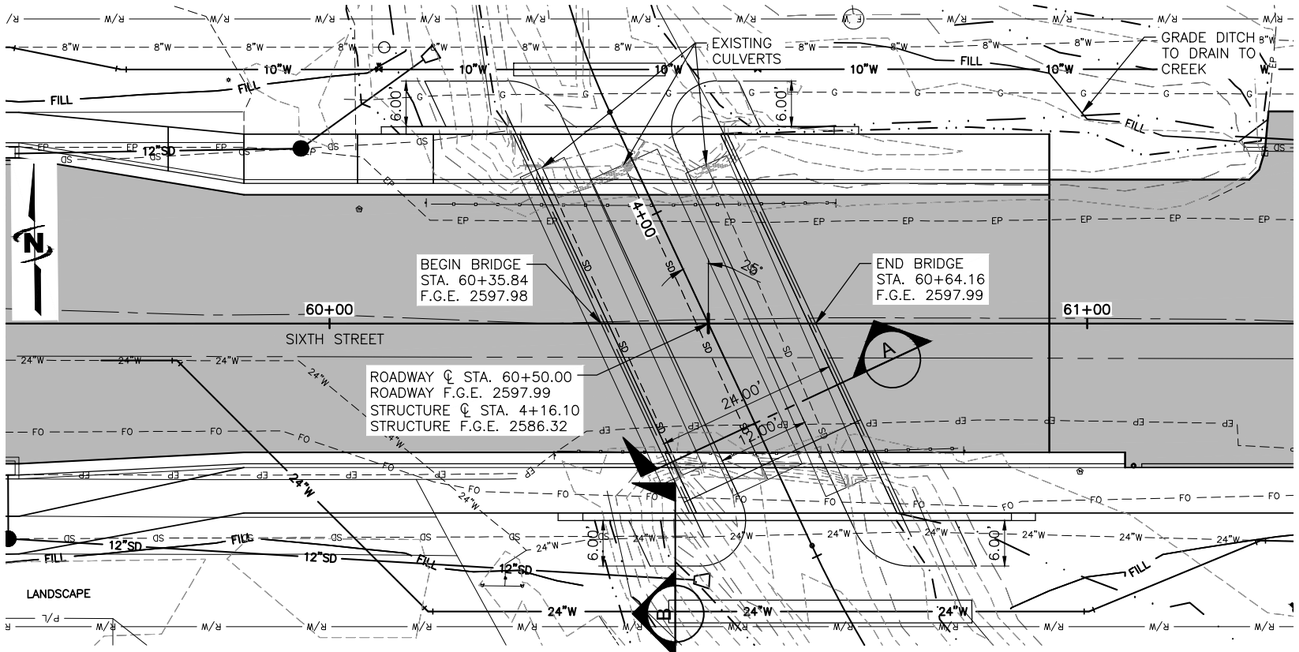

1 PARADISE CREEK PLAN VIEW
SCALE:1" = 10'-0"

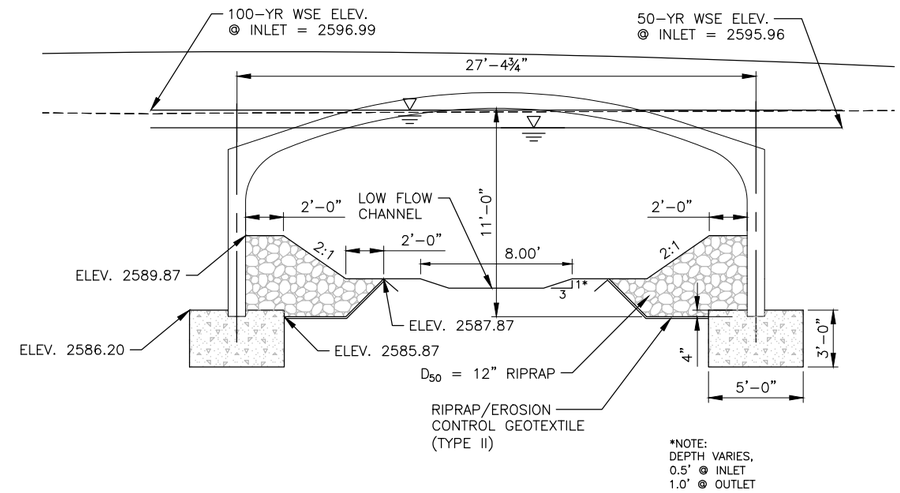

2 SECTION A–A
SCALE:1" = 4'-0"

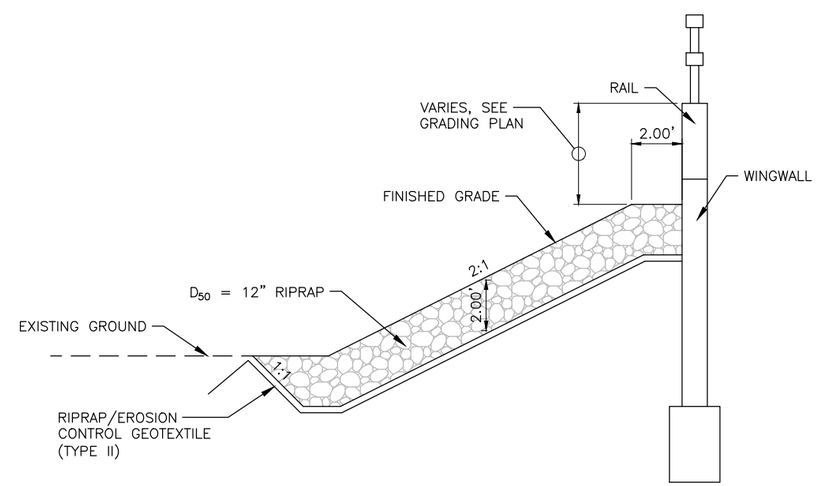

3 SECTION B–B (TYPICAL RIPRAP GRADING AT WINGWALLS)
SCALE:N.T.S.

J-U-B ENGINEERS, INC.
201 South Jackson Street
Moscow, ID 83843
Phone: 208.746.9010
www.jub.com

PROFESSIONAL ENGINEER LICENSED 16311 02/19/2021 STATE OF IDAHO CHRISTOPHER S. PETTIGREW

REUSE OF DRAWINGS:
J-U-B SHALL RETAIN ALL COMMON LAW, STATUTORY, COPYRIGHT AND OTHER RESERVED RIGHTS OF THESE DRAWINGS, AND THE SAME SHALL NOT BE REUSED WITHOUT J-U-B'S PRIOR WRITTEN CONSENT. ANY REUSE WITHOUT WRITTEN CONSENT BY J-U-B WILL BE AT CLIENTS SOLE RISK AND WITHOUT LIABILITY OR LEGAL EXPOSURE TO J-U-B.

NO.	DESCRIPTION	BY	APR.	DATE

REVISION

SIXTH STREET CROSSING OVER PARADISE CREEK
CITY OF MOSCOW

CHANNEL GRADING DETAILS

FILE: 21-20-010_C-40X
JUB PROJ. #: 20-21-010
DRAWN BY: KWC
DESIGN BY: CSP
CHECKED BY: CSP
ONE INCH
AT FULL SIZE, IF NOT ONE INCH, SCALE ACCORDINGLY
LAST UPDATED: 2/19/2021

SHEET NUMBER:
C-401

Plot Date:2/19/2021 3:12 PM Plotted By: Kurt Cox
Date Created:2/4/2021 \\JUB.COM\CENTRAL\CLIENTS\ID\MOSCOW\CITY\PROJECTS\21-20-010_SIXTHSTREETCROSSINGOVERPARADISECREEK\DESIGN\CAD\SHEET\21-20-010_C-40X.DWG

APPROXIMATE SIGNING QUANTITIES

SIGNING	DESCRIPTION	SIZE	SQ. FT.	QUANTITIES	SQ. FT-CLASS B
D3–1	"E 6TH STREET"	30"x12"	2.5	10	25
M4–8A	END DETOUR	30"x24"	5.0	2	10
M4–9T	DETOUR (THRU)	30"x24"	5.0	1	5
M4–9L	DETOUR (LEFT)	30"x24"	5.0	5	25
M4–9R	DETOUR (RIGHT)	30"x24"	5.0	4	20
R11–4	ROAD CLOSED TO THRU TRAFFIC	60"x30"	12.5	2	25
W20–2	DETOUR AHEAD	48"x48"	16.0	4	64
W20–3	ROAD CLOSED AHEAD	48"x48"	16.0	4	64
				SUBTOTAL	238
				10% CONTINGENCY	24
				TOTAL	262
				TYPE III BARRICADES	4

GENERAL NOTES

1. ALL WORK ZONE SIGNING SHALL MEET OR EXCEED THE REQUIREMENTS OF THE MANUAL ON UNIFORM TRAFFIC CONTROL DEVICES, AS ADOPTED BY THE CITY.

2. ALL EXISTING PERMANENT SIGNS IN CONFLICT WITH TEMPORARY SIGNS, SHALL BE COVERED WHILE WORK ZONE SIGNING IS IN EFFECT.

3. IF THE TRAFFIC CONTROL PLAN AS SHOWN DOES NOT CONFORM TO THE CONTRACTOR'S METHOD OF OPERATION, THE CONTRACTOR SHALL SUBMIT NEW TRAFFIC CONTROL PLANS FOR APPROVAL.

4. ALL DISTANCES BETWEEN SIGNS ARE MINIMUMS AND MAY REQUIRE SPACING ADJUSTMENTS IN THE FIELD DEPENDING ON PREVAILING CONDITIONS.

5. ALL WORK ZONE SIGNING AND DRUMS AND TUBULAR MARKERS SHALL BE IN PLACE PRIOR TO DIVERSION OF TRAFFIC. TRAFFIC CONTROL PLANS SHOW DRUMS IN ALL TAPERS AND IN ALL TANGENTS. CONTRACTOR MAY SUBSTITUTE TUBULAR MARKERS FOR DRUMS IN TANGENT SECTIONS BUT MUST ALWAYS MAINTAIN DRUMS IN TAPER SECTIONS.

6. ALL TAPER LENGTHS SHALL MEET THE REQUIREMENTS OF THE MANUAL ON UNIFORM TRAFFIC CONTROL DEVICES, PART VI, AS ADOPTED BY THE STATE, BASED ON POSTED TRAFFIC CONTROL SPEED LIMIT SIGNING.

7. ADDITIONAL SIGNING MAY BE REQUIRED AS DIRECTED BY THE ENGINEER.

8. ALL WORK ZONE SIGNING SHALL BE ON SIGN POSTS OFF PAVEMENT AND SIGNING ON TEMPORARY STANDS ON PAVEMENT.

9. WHEN WORK ZONE TEMPORARY SIGNS ARE NOT APPLICABLE, THEY SHALL BE COVERED. WHEN WORK ZONE SIGNS MOUNTED ON TEMPORARY STANDS ARE NOT APPLICABLE, THEY SHALL BE REMOVED FROM THE PROJECT.

10. TRAFFIC SHALL NOT BE DELAYED MORE THAN 15 MINUTES AND NOT DELAYED DURING PEAK TRAFFIC TIMES IN THE MORNING AND EVENING. SEE SPECIAL PROVISIONS FOR SPECIFIC TRAFFIC CONTROL REQUIREMENTS.

LEGEND

- SIGN
- TYPE III BARRICADE
- DRUMS OR TUBULAR MARKERS

TUBULAR MARKER

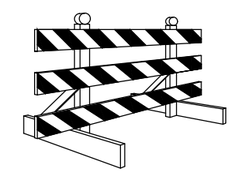

BARRICADE TYPE III

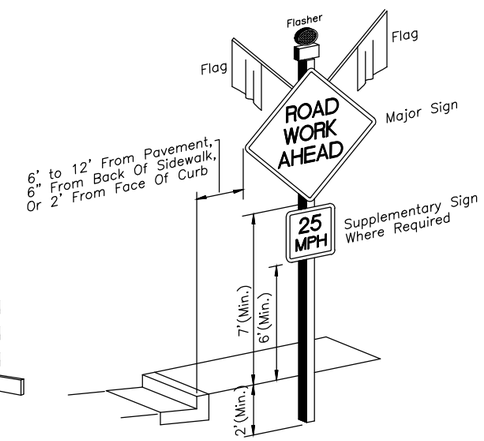

TYPICAL SIGN INSTALLATION

J-U-B ENGINEERS, INC.

J-U-B ENGINEERS, INC.
201 South Jackson Street
Moscow, ID 83843
Phone: 208.746.9010
www.jub.com

PROFESSIONAL ENGINEER LICENSED 16311 STATE OF IDAHO CHRISTOPHER S. PETTIGREW 02/19/2021

REUSE OF DRAWINGS
J-U-B SHALL RETAIN ALL COMMON LAW, STATUTORY, COPYRIGHT AND OTHER RESERVED RIGHTS OF THESE DRAWINGS, AND THE SAME SHALL NOT BE REUSED WITHOUT J-U-B'S PRIOR WRITTEN CONSENT. ANY REUSE WITHOUT WRITTEN CONSENT BY J-U-B WILL BE AT CLIENTS SOLE RISK AND WITHOUT LIABILITY OR LEGAL EXPOSURE TO J-U-B.

NO.	DESCRIPTION	BY	APR.	DATE
	REVISION			

SIXTH STREET CROSSING OVER PARADISE CREEK
CITY OF MOSCOW

DETOUR PLAN

FILE: 21-20-010_C-90X
JUB PROJ. #: 20-21-010
DRAWN BY: KWC
DESIGN BY: CSP
CHECKED BY: CSP
ONE INCH
AT FULL SIZE, IF NOT ONE INCH, SCALE ACCORDINGLY
LAST UPDATED: 2/19/2021

SHEET NUMBER:
C-900

Plot Date:2/19/2021 3:12 PM Plotted By: Kurt Cox
Date Created:2/4/2021 \\JUB.COM\CENTRAL\CLIENTS\ID\MOSCOW\CITY\PROJECTS\21-20-010_SIXTHSTREETCROSSINGOVERPARADISECREEK\DESIGN\CAD\SHEET\21-20-010_C-90X.DWG

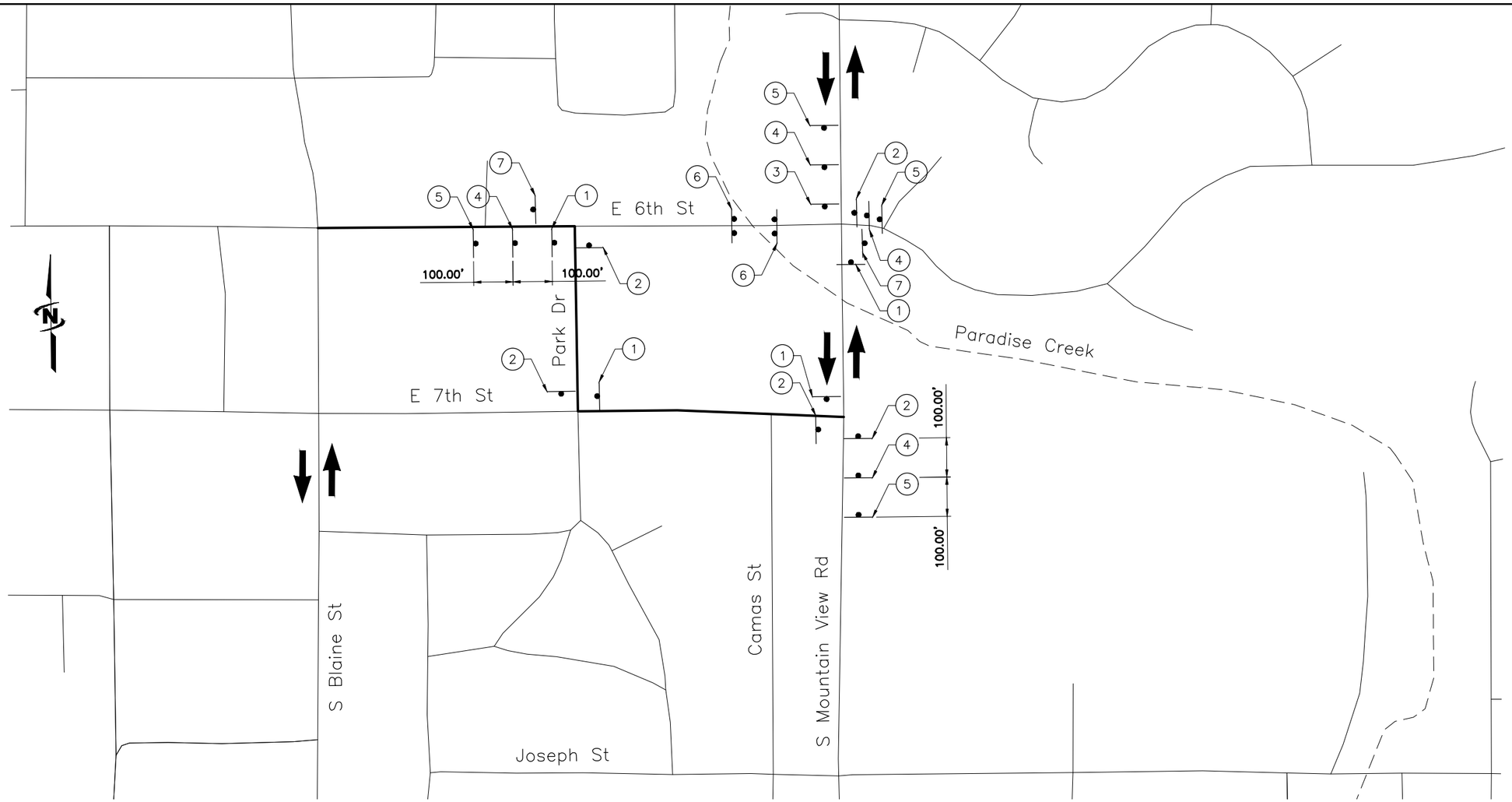

1 D3-1 (BLACK ON ORANGE)

M4-9R

2 D3-1 (BLACK ON ORANGE)

M4-9L

3 D3-1 (BLACK ON ORANGE)

M4-9T

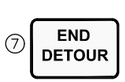

7 M4-8A

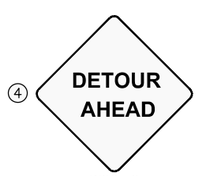

4 W20-2

5 W20-3

6 R11-4

NOTES:

1. TRAFFIC CONTROL DEVICES SHALL BE IN ACCORDANCE WITH THE MANUAL ON UNIFORM TRAFFIC CONTROL DEVICES (MUTCD).
2. SIGNS SHALL BE SPACED APPROXIMATELY 100 FEET FROM EACH OTHER AND 100 FEET IN ADVANCE OF ALL INTERSECTIONS.
3. THE CONTRACTOR MUST MAINTAIN SAFE ACCESS TO E 6TH STREET FOR LOCAL TRAFFIC.

J-U-B ENGINEERS, INC.

J-U-B ENGINEERS, INC.
201 South Jackson Street
Moscow, ID 83843
Phone: 208.746.9010
www.jub.com

PROFESSIONAL ENGINEER LICENSED 16311 02/19/21 STATE OF IDAHO CHRISTOPHER S. PETTIGREW

REUSE OF DRAWINGS:
J-U-B SHALL RETAIN ALL COMMON LAW, STATUTORY, COPYRIGHT AND OTHER RESERVED RIGHTS OF THESE DRAWINGS, AND THE SAME SHALL NOT BE REUSED WITHOUT J-U-B'S PRIOR WRITTEN CONSENT. ANY REUSE WITHOUT WRITTEN CONSENT BY J-U-B WILL BE AT CLIENTS SOLE RISK AND WITHOUT LIABILITY OR LEGAL EXPOSURE TO J-U-B.

REVISION			
NO.	DESCRIPTION	BY	APPR.	DATE

SIXTH STREET CROSSING OVER PARADISE CREEK
CITY OF MOSCOW

DETOUR PLAN

FILE : 21-20-010_C-90X
JUB PROJ. # : 20-21-010
DRAWN BY: KWC
DESIGN BY: CSP
CHECKED BY: CSP
ONE INCH
AT FULL SIZE, IF NOT ONE INCH, SCALE ACCORDINGLY
LAST UPDATED: 2/19/2021

SHEET NUMBER:
C-901

Plot Date:2/19/2021 3:12 PM Plotted By: Kurt Cox
Date Created:2/4/2021 \\JUB.COM\CENTRAL\CLIENTS\ID\MOSCOW\CITY\PROJECTS\21-20-010_SIXTHSTREETCROSSINGOVERPARADISECREEK\DESIGN\CAD\SHEET\21-20-010_C-90X.DWG

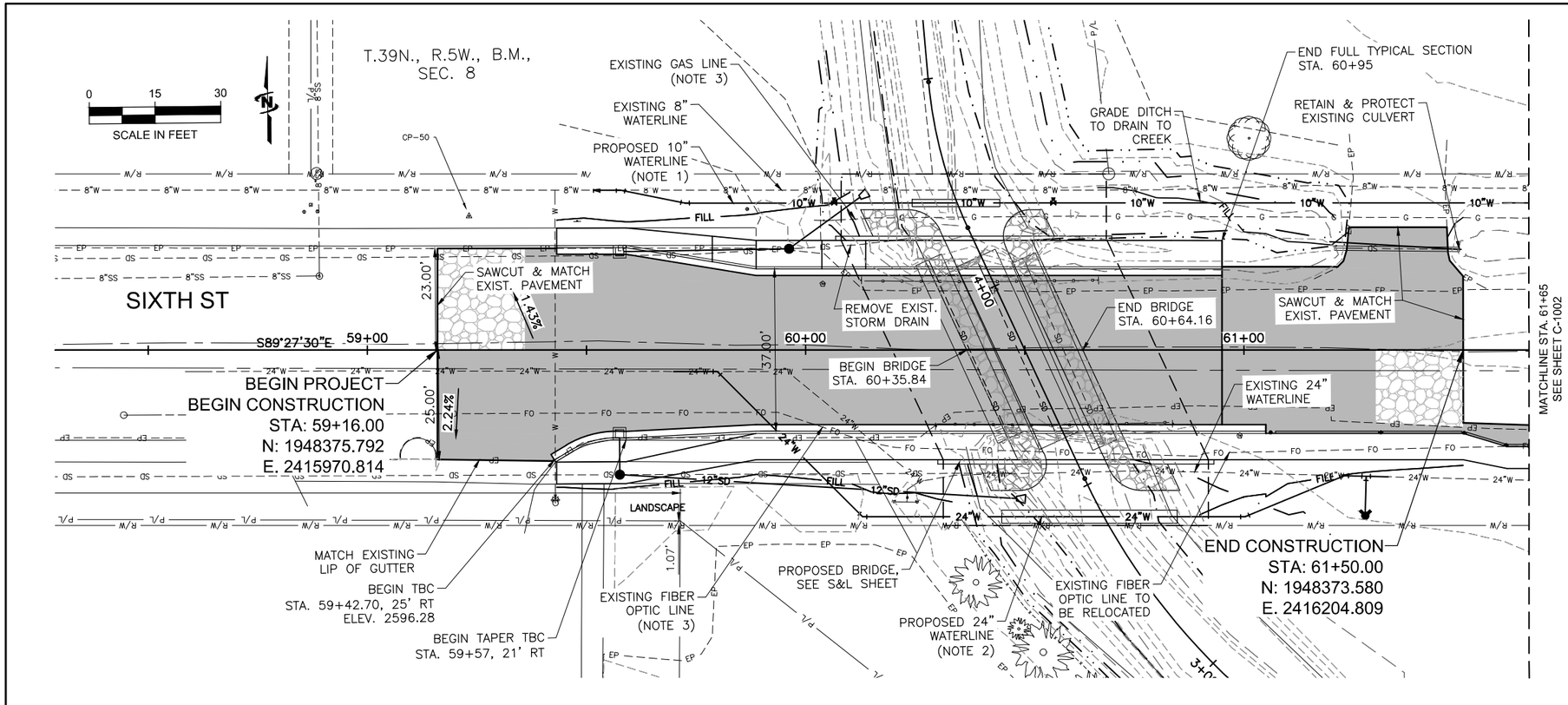

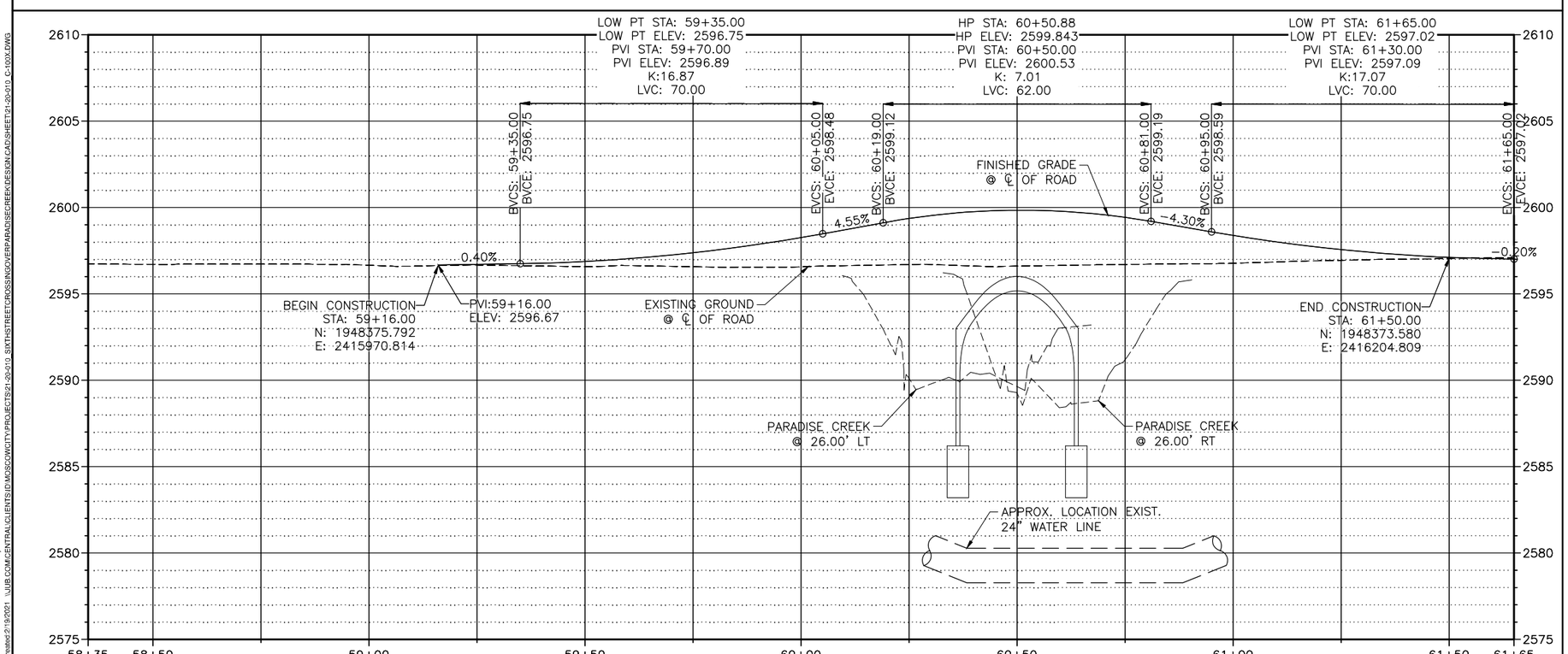

NOTES:
1. SEE 10" WATER MAIN PLAN & PROFILE
2. SEE 24" WATER MAIN PLAN & PROFILE
3. RELOCATE AT UTILITY OWNER'S EXPENSE

J-U-B ENGINEERS, INC.
J-U-B ENGINEERS, INC.
201 South Jackson Street
Moscow, ID 83843
Phone: 208.746.9010
www.jub.com

PROFESSIONAL ENGINEER LICENSED 16311 STATE OF IDAHO CHRISTOPHER S. PETTIGREW 02/19/2021

REUSE OF DRAWINGS
J-U-B SHALL RETAIN ALL COMMON LAW, STATUTORY, COPYRIGHT AND OTHER RESERVED RIGHTS OF THESE DRAWINGS, AND THE SAME SHALL NOT BE REUSED WITHOUT J-U-B'S PRIOR WRITTEN CONSENT. ANY REUSE WITHOUT WRITTEN CONSENT BY J-U-B WILL BE AT CLIENTS SOLE RISK AND WITHOUT LIABILITY OR LEGAL EXPOSURE TO J-U-B

NO.	DESCRIPTION	BY	APR.	DATE
	REVISION			

SIXTH STREET CROSSING OVER PARADISE CREEK
CITY OF MOSCOW

UTILITY PLAN

FILE: 21-20-010_C-100X
JUB PROJ. # : 20-21-010
DRAWN BY: KWC
DESIGN BY: CSP
CHECKED BY: CSP
ONE INCH
AT FULL SIZE, IF NOT ONE INCH, SCALE ACCORDINGLY
LAST UPDATED: 2/19/2021

SHEET NUMBER:
C-1001

Plot Date:2/19/2021 3:12 PM Plotted By: Kurt Cox
Date Created:2/19/2021 \\JUB.COM\CENTRAL\CLIENTS\ID\MOSCOW\CITY\PROJECTS\21-20-010_SIXTHSTREETCROSSINGOVERPARADISECREEK\DESIGN\CAD\SHEET\21-20-010_C-100X.DWG

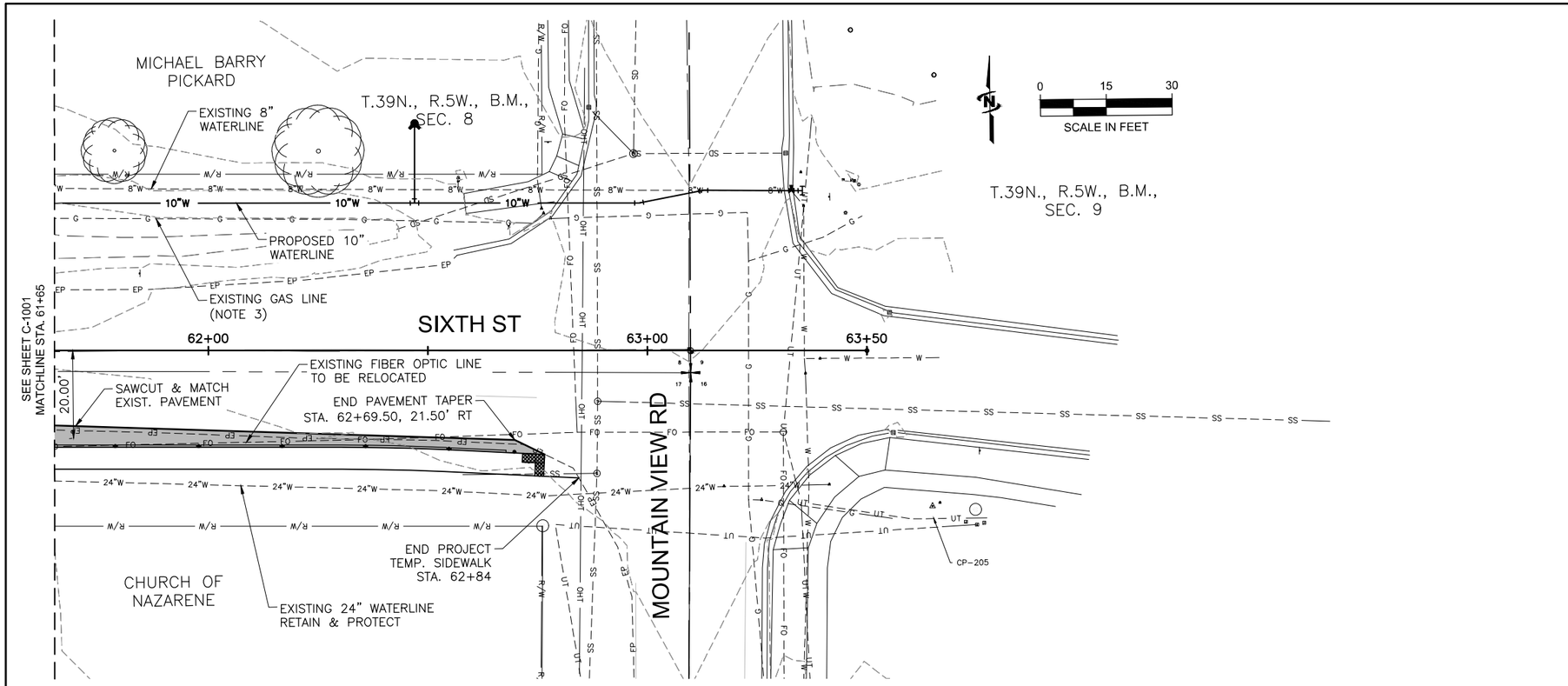

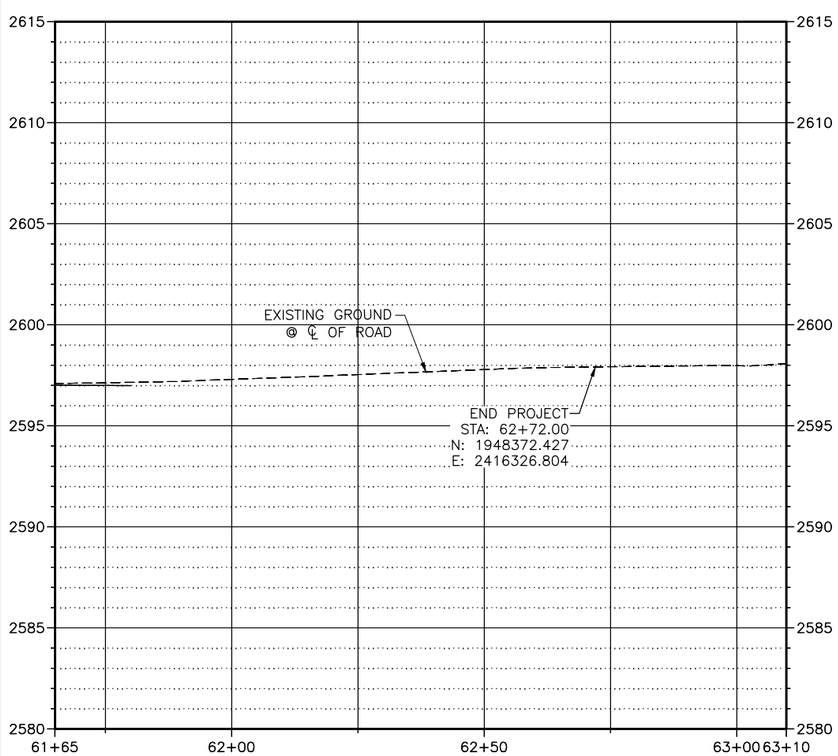

NOTES:
1. SEE 10" WATER MAIN PLAN & PROFILE
2. SEE 24" WATER MAIN PLAN & PROFILE
3. RELOCATE AT UTILITY OWNER'S EXPENSE

J-U-B ENGINEERS, INC.
J-U-B ENGINEERS, INC.
201 South Jackson Street
Moscow, ID 83843
Phone: 208.746.9010
www.jub.com

PROFESSIONAL ENGINEER LICENSED 16311 02/19/2021 STATE OF IDAHO CHRISTOPHER S. PETTIGREW

REUSE OF DRAWINGS:
J-U-B SHALL RETAIN ALL COMMON LAW, STATUTORY, COPYRIGHT AND OTHER RESERVED RIGHTS OF THESE DRAWINGS, AND THE SAME SHALL NOT BE REUSED WITHOUT J-U-B'S PRIOR WRITTEN CONSENT. ANY REUSE WITHOUT WRITTEN CONSENT BY J-U-B WILL BE AT CLIENTS SOLE RISK AND WITHOUT LIABILITY OR LEGAL EXPOSURE TO J-U-B

NO.	DESCRIPTION	BY	APPR.	DATE
	REVISION			

SIXTH STREET CROSSING OVER PARADISE CREEK
CITY OF MOSCOW

UTILITY PLAN

FILE: 21-20-010_C-100X
JUB PROJ. # : 20-21-010
DRAWN BY: KWC
DESIGN BY: CSP
CHECKED BY: CSP
ONE INCH
AT FULL SIZE, IF NOT ONE INCH, SCALE ACCORDINGLY
LAST UPDATED: 2/19/2021

SHEET NUMBER:
C-1002

Plot Date:2/19/2021 3:12 PM Plotted By: Kurt Cox
Date Created:2/19/2021 \\JUB.COM\CENTRAL\CLIENTS\ID\MOSCOW\CITY\PROJECTS\21-20-010_SIXTHSTREETCROSSINGOVERPARADISECREEK\DESIGN\CAD\SHEET\21-20-010_C-100X.DWG

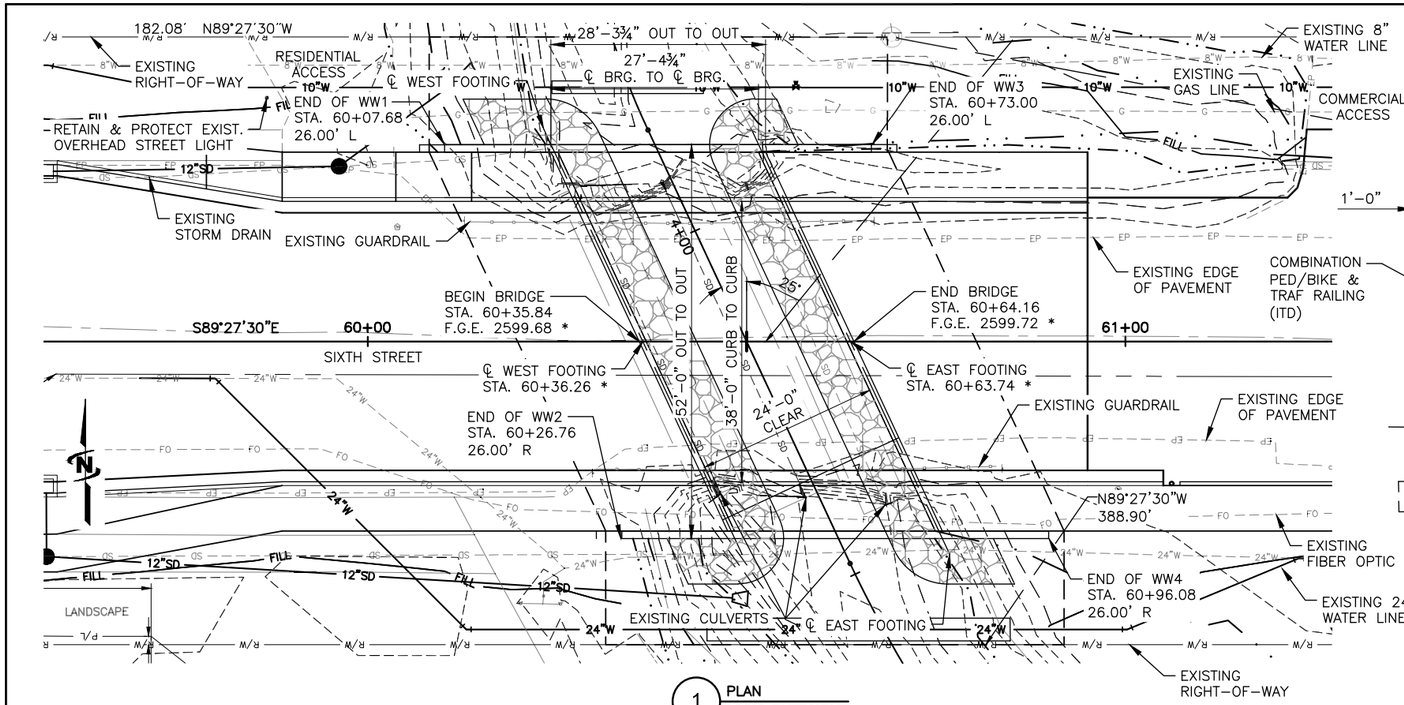

1 PLAN
SCALE:1" = 10'-0"

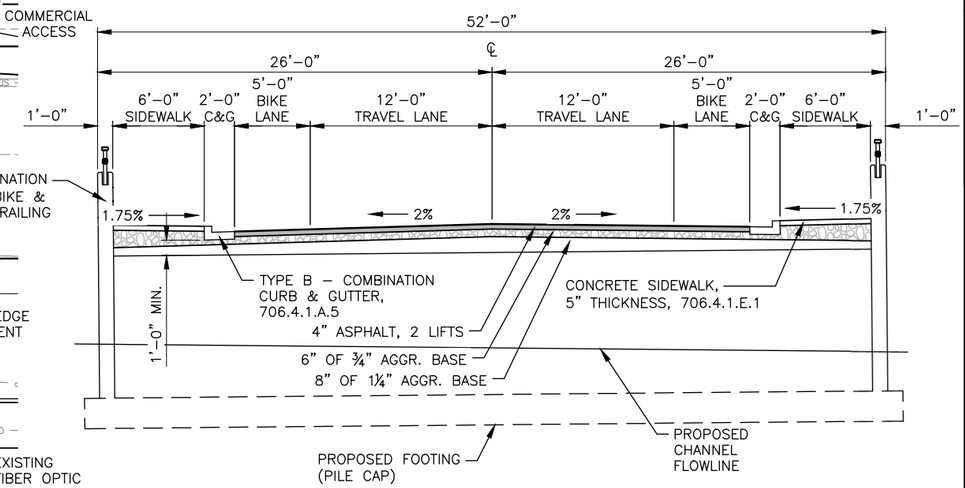

3 SIXTH STREET CROSS SECTION
SCALE:N.T.S.

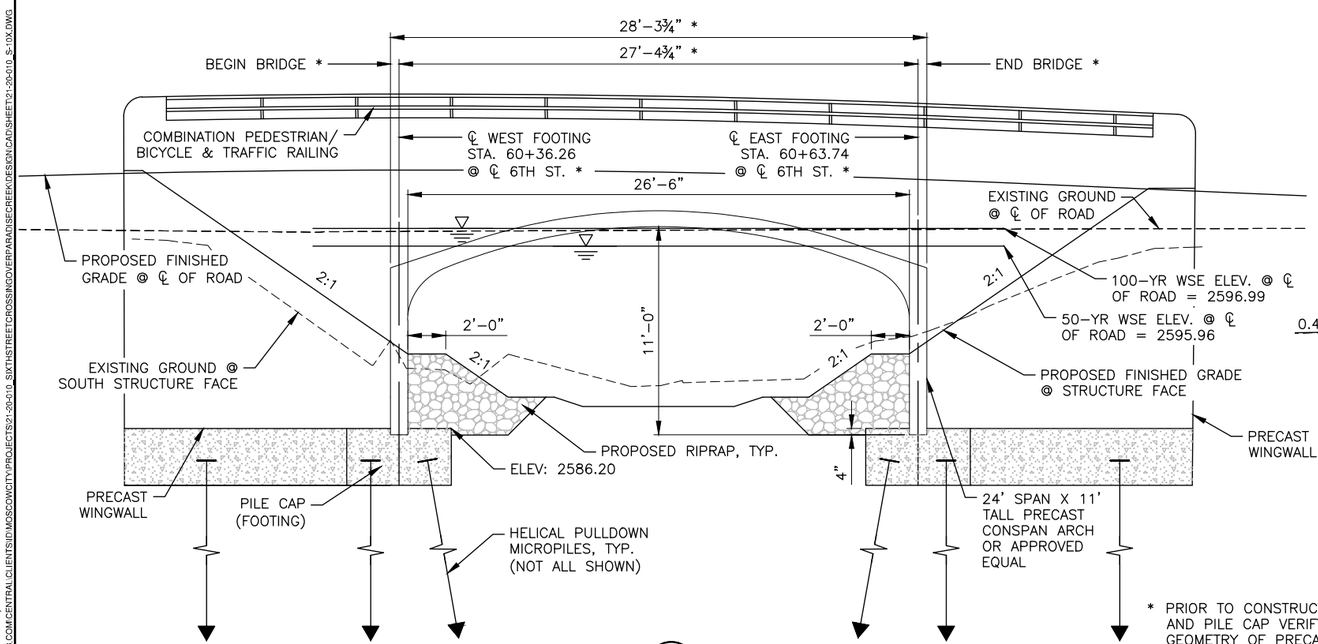

* PRIOR TO CONSTRUCTING PILE AND PILE CAP VERIFY GEOMETRY OF PRECAST ARCH AND WINGWALLS

2 ELEVATION (SOUTH SIDE SHOWN)
SCALE:N.T.S.

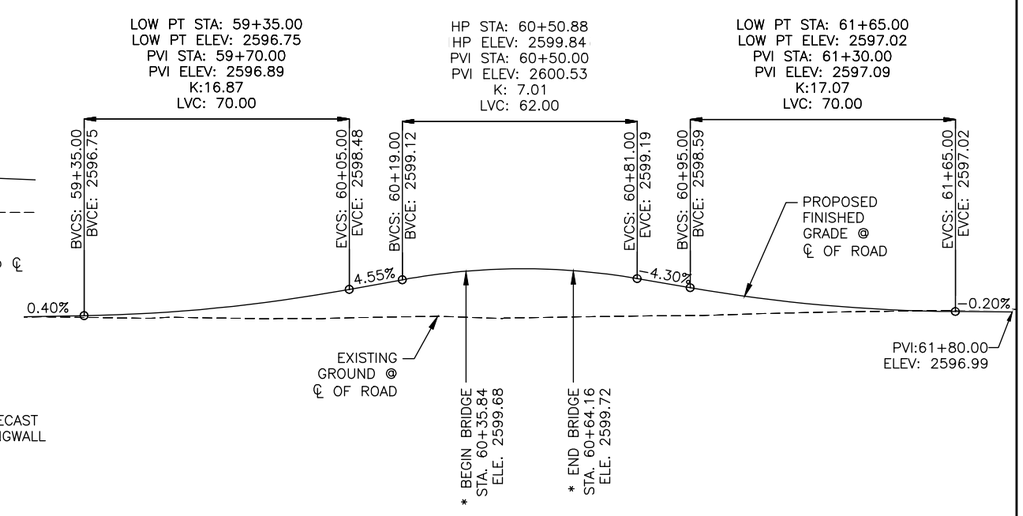

4 SIXTH STREET PROFILE
SCALE:1" = 20'-0'

J-U-B ENGINEERS, INC.
J-U-B ENGINEERS, INC.
201 South Jackson Street
Moscow, ID 83843
Phone: 208.746.9010
www.jub.com

PROFESSIONAL ENGINEER REGISTERED 9447 STATE OF IDAHO ALAN CUKURS 02/19/21

REUSE OF DRAWINGS
J-U-B SHALL RETAIN ALL COMMON LAW, STATUTORY, COPYRIGHT AND OTHER RESERVED RIGHTS OF THESE DRAWINGS, AND THE SAME SHALL NOT BE REUSED WITHOUT J-U-B'S PRIOR WRITTEN CONSENT. ANY REUSE WITHOUT WRITTEN CONSENT BY J-U-B WILL BE AT CLIENTS SOLE RISK AND WITHOUT LIABILITY OR LEGAL EXPOSURE TO J-U-B.

NO.	DESCRIPTION	BY	APR.	DATE

REVISION

SIXTH STREET CROSSING OVER PARADISE CREEK
CITY OF MOSCOW

SITUATION & LAYOUT

FILE : 21-20-010_S-10X
JUB PROJ. # : 20-21-010
DRAWN BY: KWC
DESIGN BY: CSP
CHECKED BY: CSP
ONE INCH
AT FULL SIZE, IF NOT ONE INCH, SCALE ACCORDINGLY
LAST UPDATED: 2/22/2021

SHEET NUMBER:
S-101

Plot Date:2/22/2021 4:22 PM Plotted By: Laura Skinner
Date Created:2/22/2021 \\JUB.COM\CENTRAL\CLIENTS\ID\MOSCOW\CITY\PROJECTS\21-20-010_SIXTHSTREETCROSSINGOVERPARADISECREEK\DESIGN\CAD\SHEET\21-20-010_S-10X.DWG

DESIGN NOTES

DESIGN SPECIFICATIONS

STRUCTURE TO BE DESIGNED BY PRECAST MANUFACTURER IN ACCORDANCE WITH "AASHTO LRFD BRIDGE DESIGN SPECIFICATIONS" 8th EDITION.

DESIGN LOADS

PERMANENT LOADS

DC	UNIT WEIGHT OF REINFORCED CONCRETE	0.150 kcf
DW	FUTURE SURFACING	0.03 ksf
EV	UNIT WEIGHT OF SOIL	0.138 kcf
	FILL DEPTH	** ft
EH	ACTIVE PRESSURE	0.35 kcf
	AT REST PRESSURE	0.55 kcf
	SOIL–STRUCTURE INTERACTION FACTOR (F_e OR F_t)	**
ES	EARTH LOAD SURCHARGE	** ft

TRANSIENT LOADS

LL	HL–93	
IM	DYNAMIC ALLOWANCE APPLIED TO TRUCK & TANDEM	
LS	LIVE LOAD SURCHARGE AT ABUTMENT	** feet
	LIVE LOAD SURCHARGE AT WING WALL	** feet

MICROPILE DESIGN LOADS

STRENGTH LIMIT STATE

NOMINAL AXIAL RESISTANCE q_n = 150 kips
AXIAL RESISTANCE FACTOR ϕ = 0.55
FACTORED AXIAL RESISTANCE $q_R = q_n \phi$ = 82 kips
MAX. APPLIED AXIAL LOAD Q = 72.1 kips

* PARAPET IS TL–3 LOADING. WINGWALLS AND CONCRETE BOX CULVERT SHALL BE DESIGNED FOR TL–3 LOADING, (BY PRECAST FABRICATOR)

** TO BE DETERMINED BY SUPPLIER OF PRECAST CONCRETE BOX CULVERT BASED ON PHASE IV FOUNDATION INVESTIGATION REPORT.

GENERAL NOTES

CONSTRUCTION SPECIFICATIONS

MATERIALS, CONSTRUCTION AND WORKMANSHIP SHALL BE IN ACCORDANCE WITH THE STATE OF IDAHO TRANSPORTATION DEPARTMENT, "STANDARD SPECIFICATIONS FOR HIGHWAY CONSTRUCTION", 2018 EDITION, THE PROJECT PLANS AND SPECIFICATIONS.

MATERIAL

CONCRETE :	DECK SLAB AND EDGE BEAM – CLASS 40A	f'c = 4.00 ksi
	BARREL WALLS, FOOTINGS AND WINGS – CLASS 40A	f'c = 4.00 ksi
METAL REINFORCEMENT :	AASHTO M31, GRADE 60	fy = 60.00 ksi

PLAN DIMENSIONS AND ELEVATIONS

ALL EXPOSED EDGES OF CONCRETE SHALL BE BEVELED 3/4" UNLESS NOTED OTHERWISE.
ALL DIMENSIONS TO REINFORCING STEEL ARE TO CENTERLINE OF BAR UNLESS NOTED OTHERWISE.
CONCRETE COVER MEASURED FROM THE FACE OF THE CONCRETE TO THE FACE OF ANY REINFORCING BAR SHALL BE 2", UNLESS SHOWN OTHERWISE ON THE DRAWINGS.
REINFORCING STEEL SPLICE LENGTHS SHALL BE IN ACCORDANCE WITH AASHTO SPECIFICATIONS.

CONSTRUCTION

CONSTRUCTION JOINTS WILL BE PERMITTED ONLY AT THE LOCATIONS SHOWN ON THE PLANS OR AS APPROVED BY THE ENGINEER.
CONCRETE WATERPROOF SYSTEM TYPE A OR D SHALL BE APPLIED TO THE TOP SLAB.
THE DIFFERENCE IN ELEVATION OF THE BACKFILL MATERIAL ON BOTH SIDES OF THE STRUCTURE SHALL NOT EXCEED 2 FEET DURING BACKFILL OPERATIONS.
THE ROLLER SHALL BE IN THE STATIC MODE FOR COMPACTING THE ASPHALT WEARING SURFACE OVER THE CULVERT WHEN THE DEPTH OF FILL IS LESS THAN 3'.
ALL ELEVATIONS ARE BASED ON NAVD 88 DATUM.

INCIDENTAL ITEMS

ALL ITEMS SHOWN OR NOTED ON PLANS WHICH ARE NOT SPECIFICALLY BID ITEMS ARE CONSIDERED INCIDENTAL ITEMS. THE COST OF FURNISHING AND INSTALLING ALL INCIDENTAL ITEMS WILL NOT BE PAID FOR SEPARATELY, BUT SHALL BE INCLUDED IN THE UNIT PRICE BID FOR OTHER ITEMS, UNLESS NOTED OTHERWISE.

QUANTITIES

201.4.1.F.1	REMOVAL OF CULVERTS	3	EA
202.4.6.A.1	BORROW	150	CY
204.4.1.A.1	STRUCTURAL EXCAVATION SCHEDULE 1	400	CY
204.4.3.A.1	COMPACTING BACKFILL	350	CY
205.4.1.B.1	DEWATERING FOUNDATION	1	LS
702.4.2.A.1	REINFORCING STEEL	42480	LB
703.4.1.A.1	CONCRETE (CAST–IN–PLACE) – CLASS 4000A	83	CY
704.4.1.A.3	BRIDGE – 24' SPAN X 11' RISE	1	LS
SP–3002	HELICAL PULLDOWN MICROPILE (HPM)	79	EA
SP–3003	PEDESTRIAN/BICYCLE AND TRAFFIC RAILING	135	FT

J-U-B ENGINEERS, INC.
J-U-B ENGINEERS, INC.
201 South Jackson Street
Moscow, ID 83843
Phone: 208.746.9010
www.jub.com

PROFESSIONAL ENGINEER REGISTERED 9447 02/19/21 STATE OF IDAHO ALAN CUKURS

REUSE OF DRAWINGS
J-U-B SHALL RETAIN ALL COMMON LAW, STATUTORY, COPYRIGHT AND OTHER RESERVED RIGHTS OF THESE DRAWINGS, AND THE SAME SHALL NOT BE REUSED WITHOUT J-U-B'S PRIOR WRITTEN CONSENT. ANY REUSE WITHOUT WRITTEN CONSENT BY J-U-B WILL BE AT CLIENT'S SOLE RISK AND WITHOUT LIABILITY OR LEGAL EXPOSURE TO J-U-B.

NO.	DESCRIPTION	BY	APR.	DATE
	REVISION			

SIXTH STREET CROSSING OVER PARADISE CREEK
CITY OF MOSCOW

GENERAL NOTES & QUANTITIES

FILE : 21-20-010_S-10X
JUB PROJ. # : 20-21-010
DRAWN BY: KWC
DESIGN BY: CSP
CHECKED BY: CSP
ONE INCH
AT FULL SIZE, IF NOT ONE INCH, SCALE ACCORDINGLY
LAST UPDATED: 2/22/2021

SHEET NUMBER:
S-102

Plot Date:2/22/2021 1:22 PM Plotted By: Laura Skinner
Date Created:2/22/2021 \\JUB.COM\CENTRAL\CLIENTS\ID\MOSCOW\CITY\PROJECTS\21-20-010_SIXTHSTREETCROSSINGOVERPARADISECREEK\DESIGN\CAD\SHEET\21-20-010_S-10X.DWG

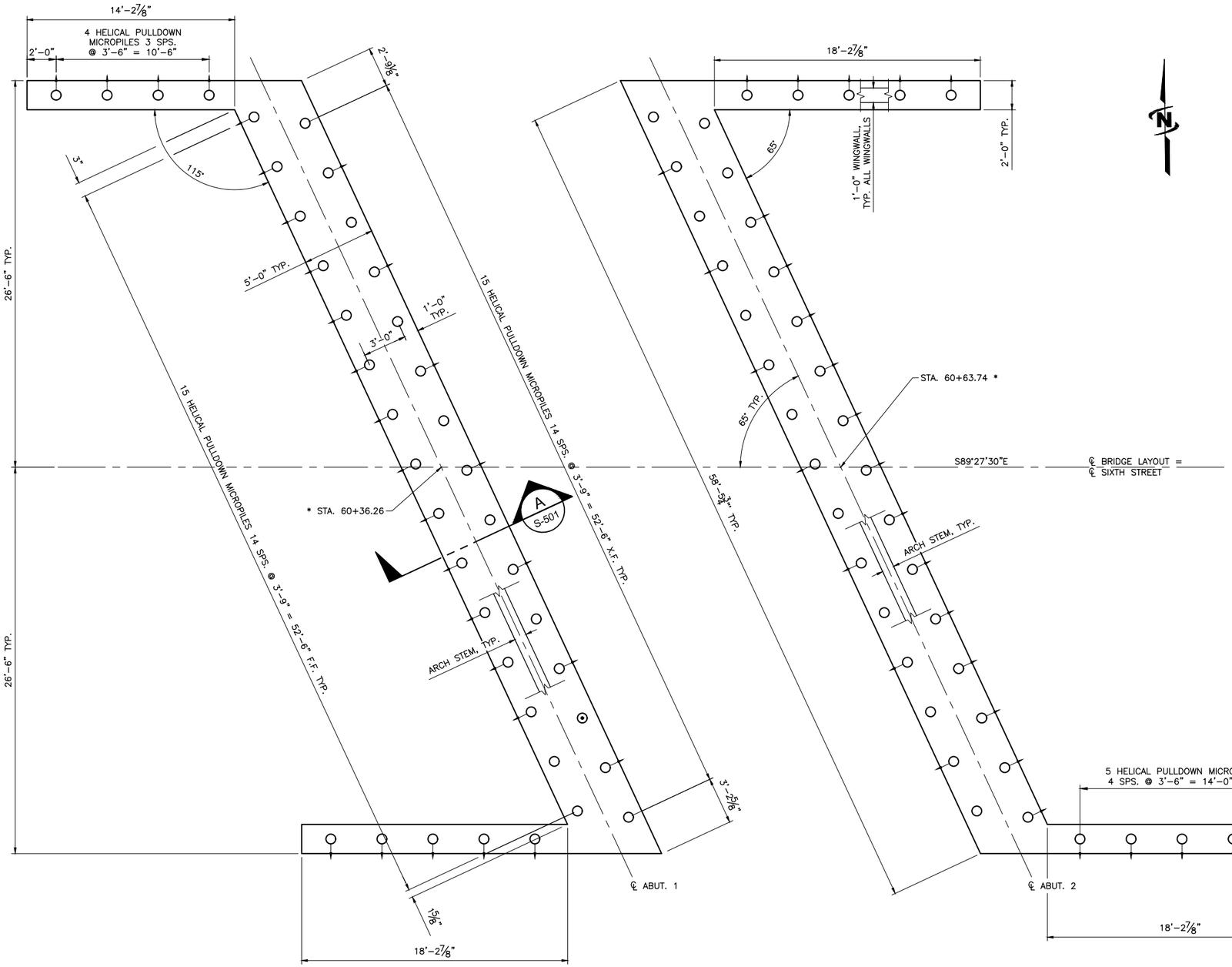

1 PLAN
SCALE: 1/4" = 1'

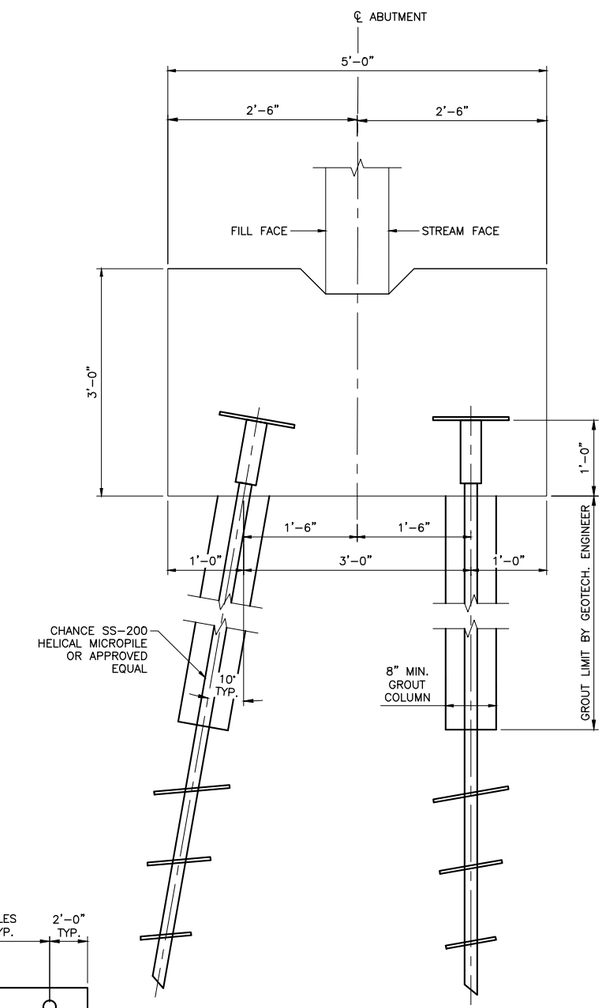

NOTE: BATTERED PILES ON STREAM FACE NOT SHOWN.

2 SECTION A
SCALE: 1" = 1'

NOTES
1. SEE GEOTECHNICAL REPORT FOR HELICAL PULLDOWN MICROPILE SPECIFICATIONS.

⊙ DENOTES TEST HELICAL PULLDOWN MICROPILE

○ DENOTES VERTICAL HELICAL PULLDOWN MICROPILE

○→ DENOTES BATTERED HELICAL PULLDOWN MICROPILE 10° IN DIRECTION SHOWN

* PRIOR TO CONSTRUCTING PILES AND PILE CAP, VERIFY GEOMETRY OF PRECAST ARCH AND WINGWALLS.

HELICAL PULLDOWN MICROPILE SCHEDULE

LOCATION	NO.	ELEVATION			ESTIMATED HPM LENGTH
		HPM PILE CAP PLATE	ESTIMATED HPM EMBEDMENT	HIGHEST HPM EMBEDMENT	
ALL	79	2584.20	2533.20	2563.20	50

J-U-B ENGINEERS, INC.
J-U-B ENGINEERS, INC.
201 South Jackson Street
Moscow, ID 83843
Phone: 208.746.9010
www.jub.com

PROFESSIONAL ENGINEER REGISTERED 9444 STATE OF IDAHO ALAN CUKURS 02/19/21

REUSE OF DRAWINGS
J-U-B SHALL RETAIN ALL COMMON LAW, STATUTORY, COPYRIGHT AND OTHER RESERVED RIGHTS OF THESE DRAWINGS, AND THE SAME SHALL NOT BE REUSED WITHOUT J-U-B'S PRIOR WRITTEN CONSENT. ANY REUSE WITHOUT WRITTEN CONSENT BY J-U-B WILL BE AT CLIENT'S SOLE RISK AND WITHOUT LIABILITY OR LEGAL EXPOSURE TO J-U-B.

NO.	DESCRIPTION	BY	APR.	DATE
	REVISION			

SIXTH STREET CROSSING OVER PARADISE CREEK
CITY OF MOSCOW

FOOTING LAYOUT AND MICROPILE DETAILS

FILE: 21-20-010_S-501
JUB PROJ. #: 20-21-010
DRAWN BY: LES
DESIGN BY: LES
CHECKED BY: CSP
ONE INCH
AT FULL SIZE, IF NOT ONE INCH, SCALE ACCORDINGLY
LAST UPDATED: 2/22/2021

SHEET NUMBER:
S-501

Plot Date: 2/22/2021 4:23 PM Plotted By: Laura Skinner
Date Created: 2/22/2021 \\JUB.COM\CENTRAL\CLIENTS\ID\MOSCOWCITY\PROJECTS\21-20-010_SIXTHSTREETCROSSINGOVERPARADISECREEK\DESIGN\CAD\SHEET\21-20-010_S-501.DWG

NOTES:

1. THE FABRICATOR SHALL DESIGN THE CONCRETE ARCH AND WINGWALLS TO INCLUDE THE PARAPET IMPACT LOADS FROM A TL-3 LOAD PER AASHTO LRFD BRIDGE DESIGN SPECIFICATIONS.

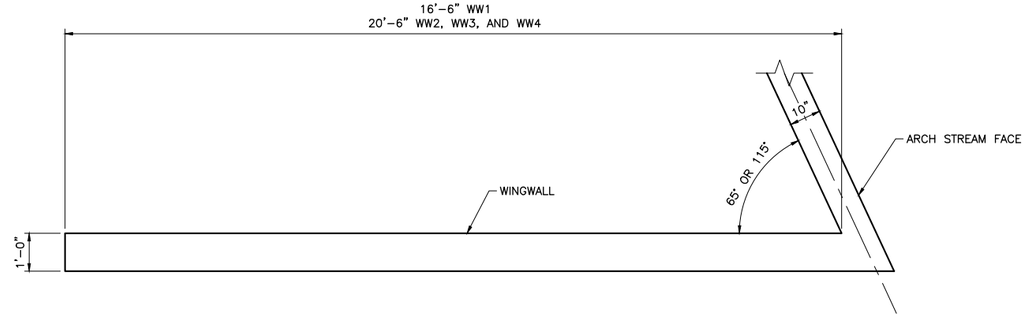

2 WINGWALL PLAN
SCALE: 1/2" = 1'

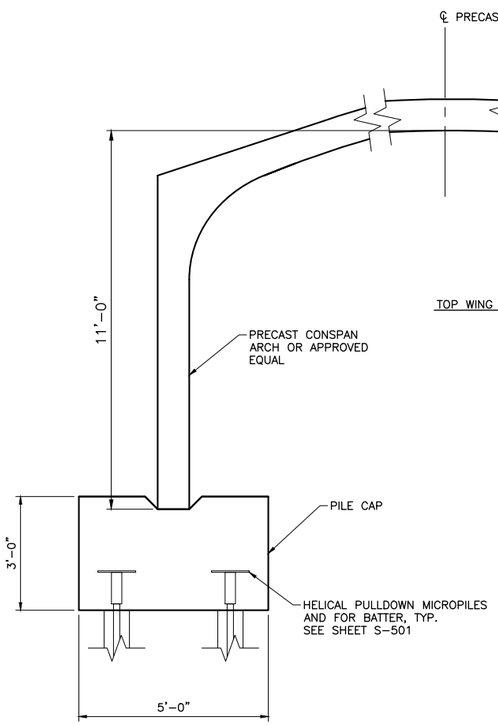

1 STRUCTURE SECTION
SCALE: 1/2" = 1'

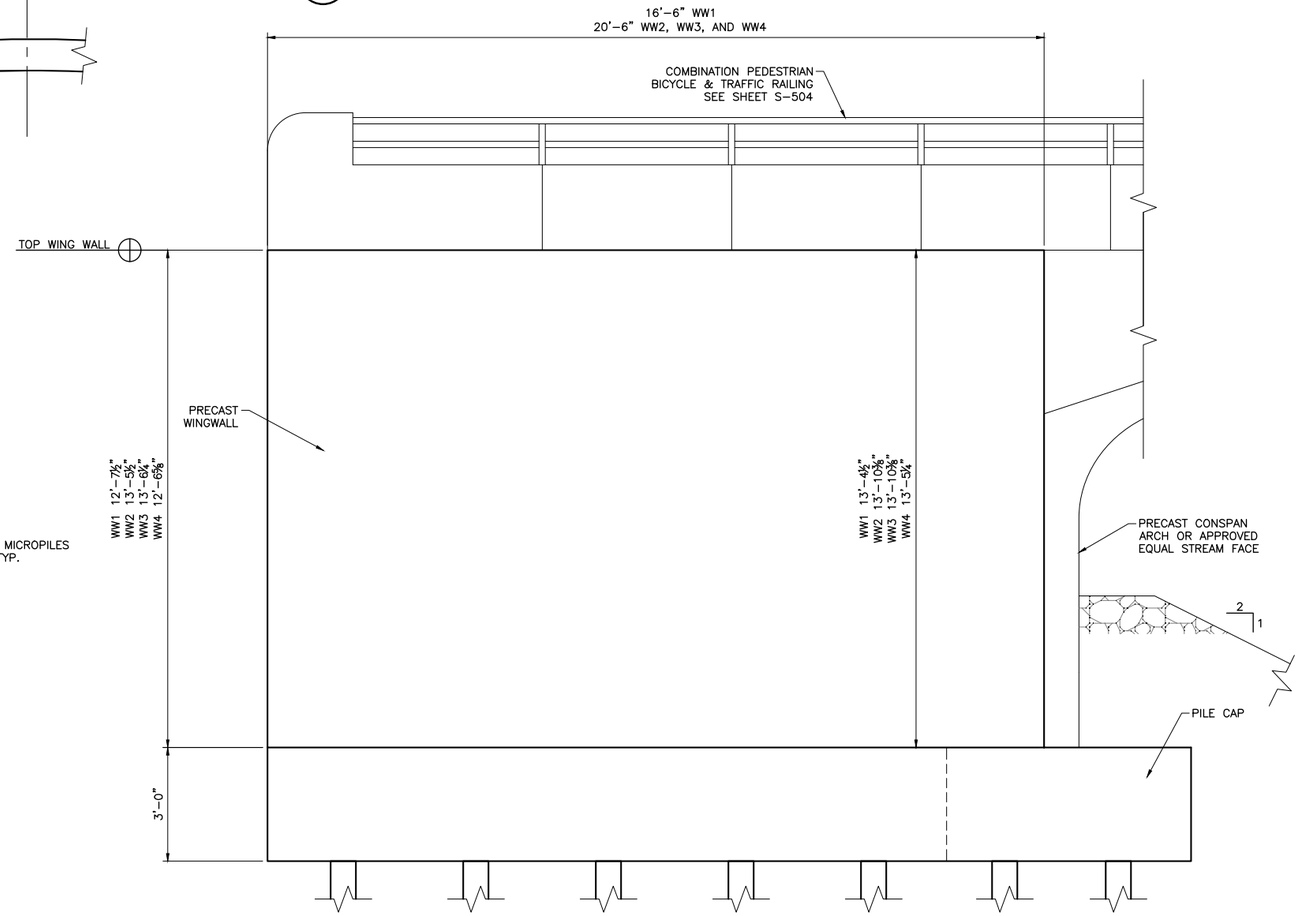

3 WINGWALL ELEVATION
SCALE: 1/2" = 1'

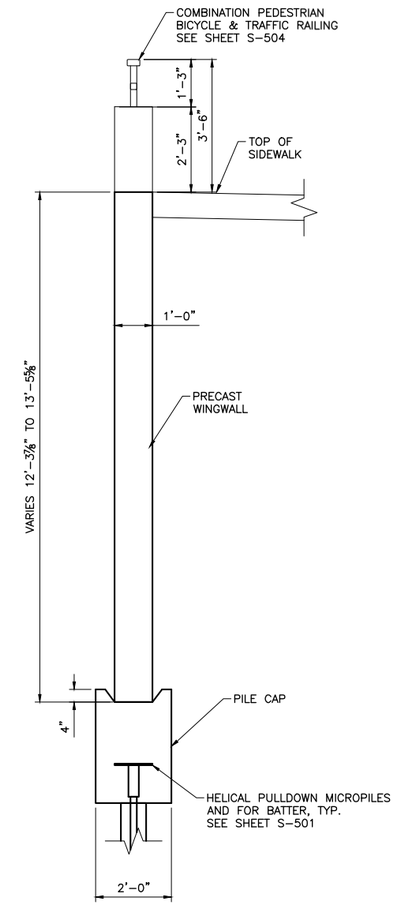

4 WINGWALL SECTION
SCALE: 1/2" = 1'

J-U-B ENGINEERS, INC.
J-U-B ENGINEERS, INC.
201 South Jackson Street
Moscow, ID 83843
Phone: 208.746.9010
www.jub.com

PROFESSIONAL ENGINEER REGISTERED 9447 STATE OF IDAHO ALAN CUKURS 02/19/21

REUSE OF DRAWINGS
J-U-B SHALL RETAIN ALL COMMON LAW, STATUTORY, COPYRIGHT AND OTHER RESERVED RIGHTS OF THESE DRAWINGS, AND THE SAME SHALL NOT BE REUSED WITHOUT J-U-B'S PRIOR WRITTEN CONSENT. ANY REUSE WITHOUT WRITTEN CONSENT BY J-U-B WILL BE AT CLIENTS SOLE RISK AND WITHOUT LIABILITY OR LEGAL EXPOSURE TO J-U-B.

NO.	DESCRIPTION	BY	APR.	DATE

REVISION

SIXTH STREET CROSSING OVER PARADISE CREEK
CITY OF MOSCOW

WINGWALL LAYOUT AND GENERAL SECTIONS

FILE: 21-20-010_S-502
JUB PROJ. #: 20-21-010
DRAWN BY: LES
DESIGN BY: LES
CHECKED BY: CSP
ONE INCH
AT FULL SIZE, IF NOT ONE INCH, SCALE ACCORDINGLY
LAST UPDATED: 2/22/2021
SHEET NUMBER:
S-502

Plot Date:2/22/2021 4:23 PM Plotted By: Laura Skinner
Date Created:2/19/2021 \\JUB.COM\CENTRAL\CLIENTS\ID\MOSCOW\CITY\PROJECTS\21-20-010_SIXTHSTREETCROSSINGOVERPARADISECREEK\DESIGN\CAD\SHEET\21-20-010_S-502.DWG

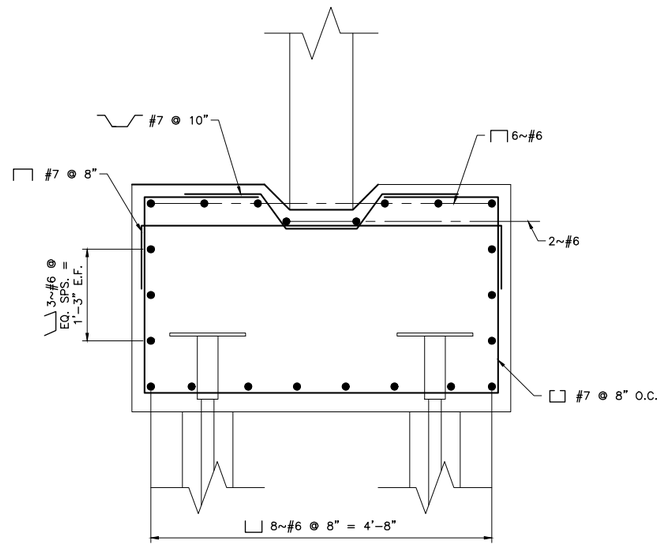

1 STRUCTURE SECTION
SCALE: 1" = 1'

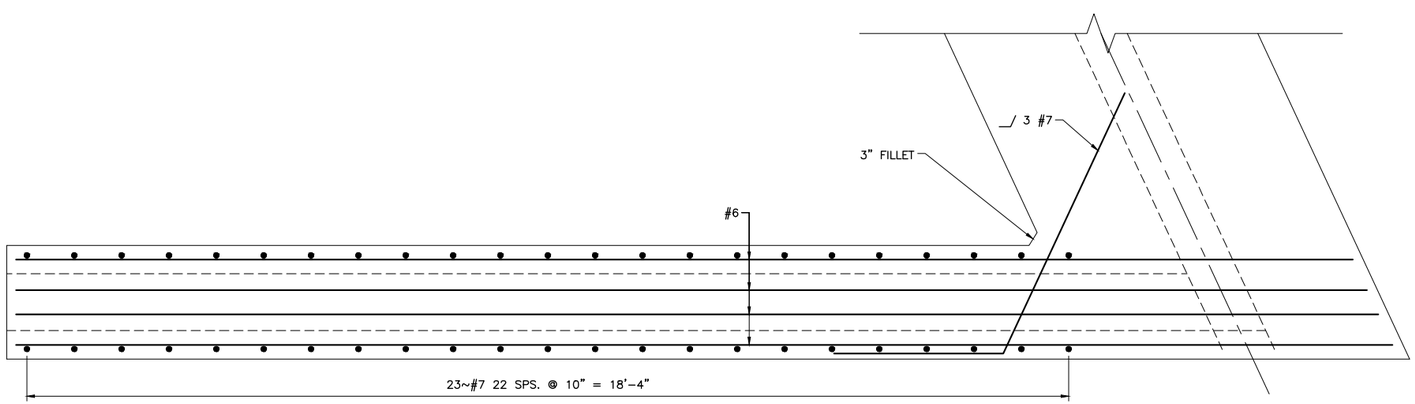

2 WINGWALL PLAN
SCALE: 3/4" = 1'

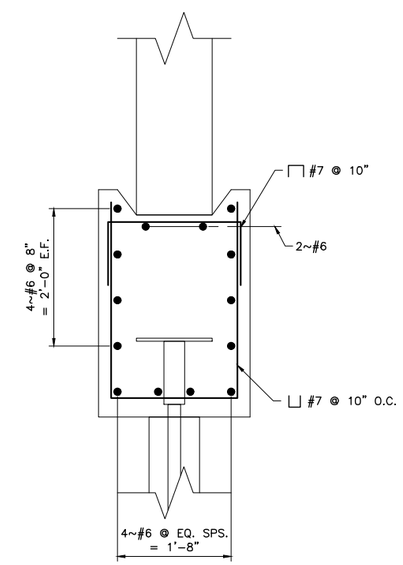

3 WINGWALL SECTION
SCALE: 1" = 1'

J-U-B ENGINEERS, INC.

J-U-B ENGINEERS, INC.
201 South Jackson Street
Moscow, ID 83843
Phone: 208.746.9010
www.jub.com

PROFESSIONAL ENGINEER REGISTERED 9440 STATE OF IDAHO 02/19/21 ALAN CUKURS

REUSE OF DRAWINGS
J-U-B SHALL RETAIN ALL COMMON LAW, STATUTORY, COPYRIGHT AND OTHER RESERVED RIGHTS OF THESE DRAWINGS, AND THE SAME SHALL NOT BE REUSED WITHOUT J-U-B'S PRIOR WRITTEN CONSENT. ANY REUSE WITHOUT WRITTEN CONSENT BY J-U-B WILL BE AT CLIENT'S SOLE RISK AND WITHOUT LIABILITY OR LEGAL EXPOSURE TO J-U-B.

REVISION

NO.	DESCRIPTION	BY	APPR.	DATE

SIXTH STREET CROSSING OVER PARADISE CREEK
CITY OF MOSCOW

FOOTING REINFORCEMENT DETAILS

FILE: 21-20-010_S-503
JUB PROJ. # : 20-21-010
DRAWN BY: LES
DESIGN BY: LES
CHECKED BY: CSP
ONE INCH
AT FULL SIZE, IF NOT ONE INCH, SCALE ACCORDINGLY
LAST UPDATED: 2/22/2021

SHEET NUMBER:
S-503

Plot Date:2/22/2021 4:24 PM Plotted By: Laura Skinner
Date Created:2/19/2021 \\JUB.COM\CENTRAL\CLIENTS\ID\MOSCOWCITY\PROJECTS\21-20-010_SIXTHSTREETCROSSINGOVERPARADISECREEK\DESIGN\CAD\SHEET\21-20-010_S-503.DWG

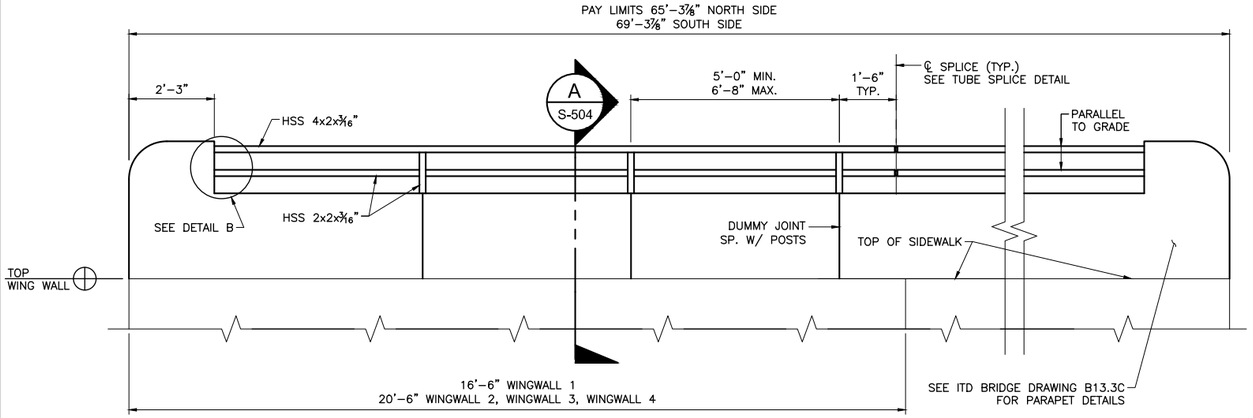

1 ELEVATION
SCALE: 1/2" = 1'

GENERAL NOTES

MATERIALS

1. ANCHOR BOLTS, NUTS, AND WASHERS SHALL CONFORM WITH A.S.T.M. F-1554 GRADE 36 AND ARE TO BE GALVANIZED IN ACCORDANCE WITH A.S.T.M. DESIGNATION A-153.
2. STRUCTURAL STEEL TUBING SHALL CONFORM WITH ASTM A-500 GRADE B OR ASTM A501.
3. STRUCTURAL STEEL PLATES AND SLEEVES SHALL CONFORM WITH AASHTO M270 GRADE 36.

GALVANIZING/POWDER COATING

4. ALL STEEL PARTS SHALL BE GALVANIZED AFTER FABRICATION IN ACCORDANCE WITH ASTM A-123 AND ASTM A-385.
5. ALL WELDED AREAS SHALL BE THOROUGHLY CLEANED PRIOR TO GALVANIZING TO REMOVE ALL SLAG OR OTHER MATERIAL THAT WOULD INTERFERE WITH THE ADHERENCE OF THE ZINC.
6. ALL GALVANIZED SURFACES SHALL BE FREE OF FINS, ABRASIONS, ROUGH OR SHARP EDGES, OR OTHER SURFACE DEFECTS.
7. THE RAILING SYSTEM SHALL BE POWDER COATED AFTER GALVANIZING WITH A MINIMUM THICKNESS OF 3 MILS. THE COLOR SHALL BE RAL 9005 (JET BLACK). A COLOR SAMPLE SHALL BE SUBMITTED FOR APPROVAL.
8. POWDER COATING SHOP PROCEDURES FOR PREPARATION OF THE GALVANIZED SURFACES AND APPLICATION PROCESS OF THE POWDER COATING SHALL BE SUBMITTED FOR APPROVAL.
9. SCRATCHES, PITS, AND OTHER DEFECTS SHALL BE REPAIRED IN ACCORDANCE WITH THE POWDER COATING MANUFACTURER'S WRITTEN INSTRUCTIONS.

FABRICATION AND ERECTION

10. FABRICATION AND ERECTION OF THE RAILING SHALL CONFORM WITH THE CURRENT EDITION OF AASHTO SPECIFICATIONS FOR HIGHWAY BRIDGES AND ITD STANDARD SPECIFICATIONS.
11. THE RAILING SHALL BE FABRICATED IN A PLANT EXPERIENCED IN PRODUCING RAILINGS AND ARCHITECTURAL METAL WORK AND SHALL BE ERECTED BY SKILLED WORKMEN EXPERIENCED IN THIS TYPE OF WORK.
12. SHOP DRAWINGS SHALL BE SUBMITTED TO THE ENGINEER ELECTRONICALLY IN PDF FORMAT IN ACCORDANCE WITH SECTION 504 NAD SHALL INCLUDE COMPLETE DIMENSIONS AND DETAILS OF FABRICATION INCLUDING AN ERECTION DIAGRAM. MATERIALS BEING USED SHALL BE CLEARLY SPECIFIED. BEFORE PROJECT COMPLETION, THE CONTRACTOR SHALL FURNISH THE ENGINEER ELECTRONIC AS-BUILT SHOP DRAWINGS IN PDF FORMAT.
13. ALL POSTS SHALL BE PLUMB.
14. ALL ENDS OF TUBE SECTIONS AT SPLICES SHALL BE SAWED OR MILLED. BUT ENDS SHALL BE TRUE, SMOOTH AND FREE FROM BURRS OR RAGGED EDGES.
15. VENT HOLES FOR GALVANIZING SHALL BE PROVIDED AS REQUIRED AND SHOWN ON THE SHOP DRAWINGS. VENT HOLES SHALL BE DRILLED AWAY FROM TRAFFIC FACE AND NOT ON THE TOP SURFACE OF THE HORIZONTAL TUBE.
16. EACH RAIL SECTION SHALL BE ATTACHED TO A MINIMUM OF TWO POSTS, BUT PREFERABLY THREE OR MORE. RAILING SYSTEM SHALL BE CONTINUOUS. EACH JOINT IN A RAIL LENGTH SHALL BE LOCATED AT THE SAME POSITION IN THE SECTION AND SHALL BE SPLICED AS DETAILED.
17. ALTERNATED SPLICE DETAILS MAY BE SUBMITTED FOR APPROVAL ON THE SHOP DRAWINGS.
18. AFTER THE RAILING IS IN PLACE AND THE POSTS ARE SET PLUMB, THE POST BLOCKOUTS SHALL BE GROUTED USING TYPE B CLASS 1 NON-METALLIC NON-SHRINK GROUT AS SPECIFIED IN SUBSECTION 705.02.

METHOD OF MEASUREMENT

19. THE BID ITEM "COMBINATION PEDESTRIAN/BICYCLE & TRAFFIC RAILING" SHALL CONSIST OF FURNISHING ALL MATERIAL AND LABOR NECESSARY FOR THE CONSTRUCTION OF THE CONCRETE PARAPET AND METAL RAILING AS SHOWN ON THE PLANS, COMPLETE IN PLACE.

ALTERNATE ALUMINUM RAILING

20. AN ALTERNATE ALUMINUM RAIL THAT GENERALLY CONFORMS TO THE GEOMETRY AND DESIGN CRITERIA OF THE STEEL RAIL MAY BE SUBSTITUTED, AT NO ADDITIONAL COST TO THE STATE. ALUMINUM RAILING SHALL CONFORM TO ASTM B221, ALLOY 660-T5. REFER TO THE ALTERNATED PEDESTRIAN/BICYCLE RAIL SPECIAL PROVISION.

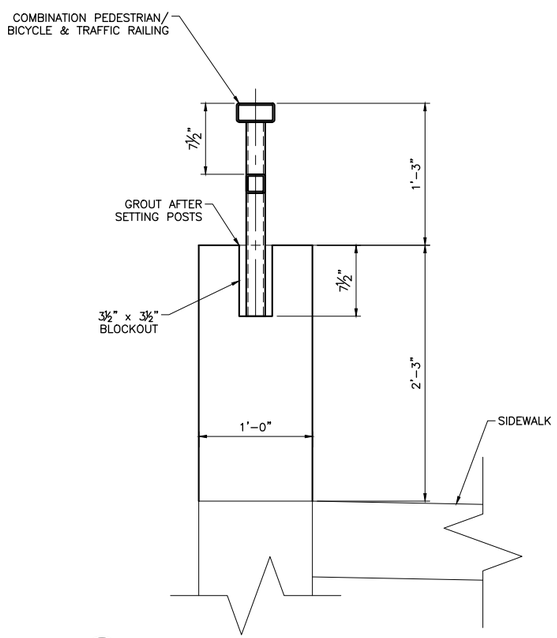

2 SECTION A
SCALE: 1 1/2" = 1'

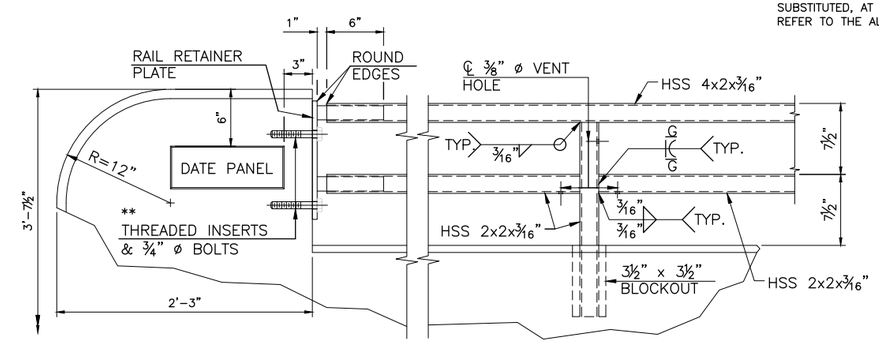

3 DETAIL B
SCALE: 1 1/2" = 1'

** ALLOWABLE OPTION:
FIELD DRILL & EPOXY GROUT ¾" ø BOLT
PER GROUT MANUFACTURER'S RECOMMENDATIONS.

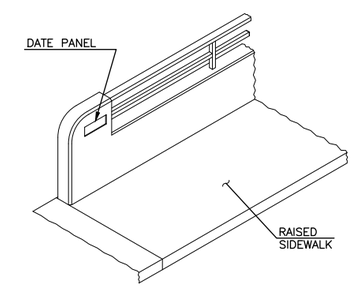

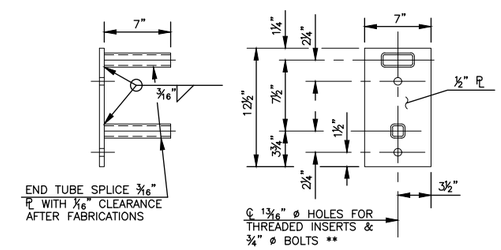

4 RAIL RETAINER PLATE
SCALE: 1 1/2" = 1'

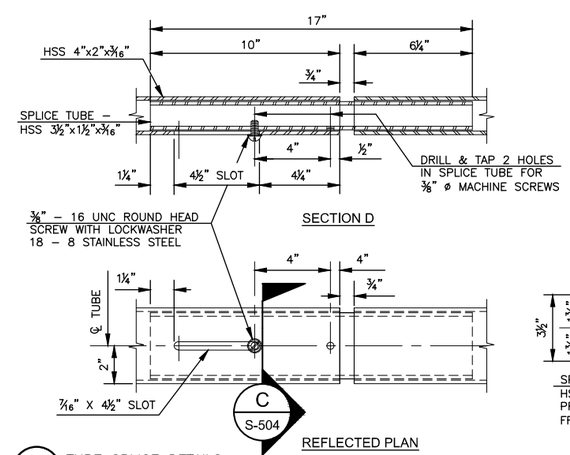

5 TUBE SPLICE DETAILS
SCALE: 3" = 1'

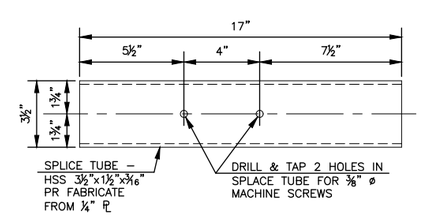

INSERT DETAILS

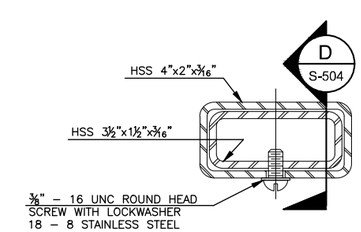

SECTION D
N.T.S.

J-U-B ENGINEERS, INC.
J-U-B ENGINEERS, INC.
201 South Jackson Street
Moscow, ID 83843
Phone: 208.746.9010
www.jub.com

PROFESSIONAL ENGINEER REGISTERED 9447 02/19/21 STATE OF IDAHO ALAN CUKURS

REUSE OF DRAWINGS
J-U-B SHALL RETAIN ALL COMMON LAW, STATUTORY, COPYRIGHT AND OTHER RESERVED RIGHTS OF THESE DRAWINGS, AND THE SAME SHALL NOT BE REUSED WITHOUT J-U-B'S PRIOR WRITTEN CONSENT. ANY REUSE WITHOUT WRITTEN CONSENT BY J-U-B WILL BE AT CLIENT'S SOLE RISK AND WITHOUT LIABILITY OR LEGAL EXPOSURE TO J-U-B.

REVISION			
NO.	DESCRIPTION	BY	APR. DATE

SIXTH STREET CROSSING OVER PARADISE CREEK
CITY OF MOSCOW

COMB. PEDESTRIAN BICYCLE AND TRAFFIC RAIL LAYOUT & DETAILS

FILE :	21-20-010_S-504
JUB PROJ. # :	20-21-010
DRAWN BY:	KWC
DESIGN BY:	CSP
CHECKED BY:	CSP

ONE INCH
AT FULL SIZE, IF NOT ONE INCH, SCALE ACCORDINGLY

LAST UPDATED: 2/22/2021

SHEET NUMBER:
S-504

Plot Date:2/22/2021 4:24 PM, Plotted By: Laura Skinner
Date Created:2/22/2021 \\JUB.COM\CENTRAL\CLIENTS\ID\MOSCOW\CITY\PROJECTS\21-20-010_SIXTHSTREETCROSSINGOVERPARADISECREEK\DESIGN\CAD\SHEET\21-20-010_S-504.DWG

City of Moscow
Latah County, Idaho

Sixth Street Crossing Over Paradise Creek

Economic Development Administration (EDA)Award No. 07-79-07731

MARCH 2022

BID AND CONTRACT DOCUMENTS

ENGINEER:

J-U-B ENGINEERS, Inc
201 S. Jackson St.
Moscow, Idaho 83843
(208) 746-9010
www.jub.com

PROFESSIONAL ENGINEER
LICENSED
16311
02/22/2022
STATE OF IDAHO
CHRISTOPHER S. PETTIGREW

BID AND CONTRACT DOCUMENTS

City of Moscow
Latah County, Idaho
Sixth Street Crossing Over Paradise Creek
March 2022

NOTICE AND DISCLAIMER

THE PLANS AND/OR SPECIFICATIONS (DOCUMENTS) ARE THE PROPERTY OF J-U-B ENGINEERS, INC. ("J-U-B") AND BY USING THE DOCUMENTS YOU AGREE TO BE BOUND BY THE TERMS AND CONDITIONS IN THIS NOTICE AND DISCLAIMER.

THE USE OF THE DOCUMENTS CREATES NO DUTY IN CONTRACT, TORT, EQUITY OR OTHERWISE OF J-U-B TO THE USER. THE USER SHALL NOT (I) DISSEMINATE THE DOCUMENTS, OR ANY PART THEREOF, TO OTHERS WITHOUT THE WRITTEN CONSENT OF J-U-B, OR (II) USE THE DOCUMENTS, OR ANY PART THEREOF, FOR ANY USE OTHER THAN AS DESIGNATED HEREIN FOR THE INTENDED PROJECT. THE DOCUMENTS ARE NOT INTENDED FOR USE IN CREATING DTM FOR GRADING OR EARTHWORK, SURVEY STAKING LAYOUT (UN-LESS SPECIFICALLY IDENTIFIED AS SUCH IN THE DOCUMENTS), OR PROPERTY BOUNDARY LAYOUTS.

J-U-B AND ITS AGENTS SHALL NOT BE LIABLE FOR ANY DAMAGES OR CLAIMS ARISING OUT OF THE UNAUTHORIZED USE OR MISUSE OF THE DOCUMENTS, OR ANY PART THEREOF, WHETHER SUCH DAMAGE OR CLAIM IS BASED IN CONTRACT, TORT OR OTHERWISE. THE USER HEREBY RELEASES AND SHALL DEFEND, INDEMNIFY AND HOLD J-U-B AND ITS AGENTS HARMLESS FROM ANY DAMAGES OR CLAIMS ARISING OUT OF, OR RELATED IN ANY WAY TO, THE USER'S UNAUTHORIZED USE OR MISUSE OF THE DOCUMENTS, OR ANY PART THEREOF.

IF THE DOCUMENTS ARE PROVIDED IN ELECTRONIC FORMAT, THE ELECTRONIC DOCUMENTS ARE SUBJECT TO THE PROVISIONS OF J-U-B'S "ELECTRONIC DOCUMENT/DATA LIMITED LICENSE" FOUND AT EDOCS.

Engineer:

J-U-B ENGINEERS, Inc
201 S. Jackson St.
Moscow, Idaho 83843
(208) 746-9010

Owner:

City of Moscow
206 East Third Street
Moscow, Idaho 83843
(208) 883-7080

BID AND CONTRACT DOCUMENTS

Sixth Street Crossing Over Paradise Creek
City of Moscow
Latah County, Idaho

Table of Contents

BIDDING AND AGREEMENT FORMS **Page #**

SECTION 1-A – BID FORMS

- Document 00030 – Invitation to Bid 7
- Document 00040 – Bidder's Checklist 9
- Document 00200 – Instructions to Bidders 11
- Document 00410 – Bid Form 23
- Document 00415 – Contractor's Non-Collusion Affidavit 33
- Document 00420 – Anti-Discrimination Affidavit 35
- Document 00430 – Bid Bond – Penal Sum Form 37
- Document 00440 – Naming of Subcontractors Form 39

SECTION 1-B – CONTRACT FORMS

- Document 00510 – Notice of Award 43
- Document 00520 – Construction Agreement 45
- Document 00550 – Notice to Proceed 51
- Document 00610 – Performance Bond 53
- Document 00615 – Payment Bond 56
- Form EFO00168 – WH-5 Public Works Contract Report 61
- Document 00620 – Contractor's Application for Payment 63
- Document 00625 – Certificate of Substantial Completion 65
- Document 00940 – Work Change Directive 66
- Document 00941 – Change Order 68
- Document 00942 – Field Order 70

SECTION 2 – GENERAL CONDITIONS

- ISPWC Division 100 – Standard General Conditions to the Construction Contract 74

SECTION 3 – SUPPLEMENTARY CONDITIONS

- Sixth Street Bridge Crossing Supplementary Conditions 134

SECTION 4 – REVISIONS TO THE STANDARD SPECIFICATIONS (ISPWC) & SPECIAL PROVISIONS

- Standards Revisions 147
- Revision to ISPWC 155
- SP-3001 - Contractor Furnished Survey and Staking 180
- SP-3002 - Helical Pulldown Micropile (HPM) 184
- SP-3003 - Pedestrian/Bicycle and Traffic Railing 199
- SP-3004 - Air Release Valve Assembly 200

SECTION 5 – ECONOMIC DEVELOPMENT ADMNISTRATION (EDA) DOCUMENTS

- U.S. Department of Commerce Economic Development Administration (EDA) Contracting Provisions for Construction Projects 204
- EDA Site Sign Specification 228
- Notice of Affirmative Action to Ensure Equal Employment Opportunity 233
- Form CD-512 Certification Regarding Lobbying Lower Tier Covered Transactions 265

SECTION 6 – PREVAILING WAGE (DAVIS BACON) DETERMINIATION

- Davis Bacon Wage Decision 268

SECTION 7 – CITY OF MOSCOW FEDERALLY FUNDED PROJECTS DAVIS BACON LABOR STANDARDS

- City of Moscow Federally Funded Projects Davis Bacon Labor Standards 284

APPENDIX A

- Geotechnical Engineering Evaluation – Mountain View Road & 6th Street 345

APPENDIX B

- City of Moscow Standard Construction Specifications and Standard Construction Drawings 367

City of Moscow
Latah County, Idaho
Sixth Street Crossing Over Paradise Creek

Section 1-A

Bid Forms

THIS PAGE WAS INTENTIONALLY LEFT BLANK

INVITATION TO BID

The City of Moscow, Idaho is accepting sealed bids to be submitted to the business office of the Community Development Engineering Division at 504 S. Washington Street, Moscow, Idaho 83843 and clearly marked "**Bid Enclosed – Sixth Street Crossing Over Paradise Creek**", until **2:00 p.m.** prevailing local time, **Tuesday, March 22nd, 2022**, for the following project:

SIXTH STREET CROSSING OVER PARADISE CREEK

At **2:15 p.m., on the same day** referenced above, all proposals will be publicly opened and read aloud in City Hall Council Chambers, on the second floor of City Hall, 206 East Third Street, Moscow, ID 83843.

> Sixth Street Crossing Over Paradise Creek generally consists of demo and removal of the existing bridge, construction of a new bridge, demo of existing utility lines, installation and tie in of new utility lines, and surface repair. All parts or work not specifically mentioned that are necessary in order to provide a complete installation shall be included in the bid and shall conform to all local, State, and Federal requirements.

Complete digital Project Manual and Project Plans, may viewed at www.questcdn.com via the link provided on The City of Moscow Website at: www.ci.moscow.id.us – click on "Business" / "Bid Opportunities" / "Sixth Street Crossing Over Paradise Creek"

Once on the Quest site, you may download the digital plan documents for a **non-refundable fee of $20.00.** The Quest project number is 8137188. Please contact QuestCDN.com at 952-233-1632 or info@questcdn.com for assistance in free membership registration, downloading, and working with digital project information.

The Contract Documents may also be examined at the following locations:

- City of Moscow, Haddock Building, 504 South Washington Street, Moscow, ID 83843
- J-U-B ENGINEERS, Inc.; 201 S Jackson St., Moscow ID 83843

A **non-mandatory Pre-Bid Conference** will be held at 2 p.m., prevailing local time, Tuesday, March 15, 2022, at the Moscow City Hall Council Chambers, 206 East Third Street, Moscow, Idaho.

The Contractor shall not discriminate on the basis of race, color, national origin, religion, creed, sex, or age in the performance of this contract. Failure by the Contractor to carry out these requirements is a material breach of this contract which may result in the termination of this contract or other legally available remedies.

Bids must be accompanied by Bid Security in the form of a bid bond, certified check, or cashier's check in the amount of 5% of the amount of the bid proposal. Said bid security shall be forfeited to the City of Moscow, Idaho as liquidated damages should the successful bidder fail to enter into contract in accordance with their proposal as specified in the Instructions to Bidders. An Idaho Public Works License is required to bid.

Any objections to the contents or terms of the documents shall be raised three (3) days prior to bid opening or it shall be deemed to have been waived.

The City reserves the right to reject any or all Bid Proposals, to waive any formality in the Bidding Contract Documents, and to make selection to the lowest responsive, responsible, and qualified Bidder as it may best serve the interest of the City.

Questions shall be referred to the Project Engineer, Mr. Christopher Pettigrew, P.E., at J-U-B ENGINEERS, Inc. at 2760 W Excursion Ln, Ste 400, Meridian, ID 83642; phone 208-376-7330; email cpettigrew@jub.com.

Tracy Ortiz, Deputy City Clerk

Publish Dates: February 26, 2022 & March 05, 2022

Bidder's Checklist

The Bidder's Check List is offered to assist the prospective bidder in checking his/her Bid. This checklist does not relieve the bidder from properly completing his/her Bid.

Check off when completed:

1._____ Are all blank spaces filled out on Bid Form?

2._____ Have questions arising from the bidding, contract, specifications or plans been submitted to the proper authority and resolved in the proper manner?

3._____ Are Bid amounts shown correctly as well as extensions and totals? Recheck for errors or omissions.

4._____ Are authorized signatures properly affixed to the Bid form, giving also title, and Idaho Public Works Contractor license number, evidence of authority to sign, etc.?

5._____ Have all plumbing, heating, air conditioning and electrical subcontractors to whom work will be awarded been listed, as well as their Idaho Public Works Contractor license number?

6._____ Have all Addenda been received and acknowledged with the proper signature on the Bid Form?

7._____ In order for a Bid to be considered, the required attachments must be placed in a properly addressed sealed envelope and delivered to the specified authority prior to the time designated for the bid opening.

8._____ Has the Bid Security been enclosed?

9._____ Has Bidder performed examinations in accordance with the Instructions to Bidders?

10._____Has Bidder included additional information required in Article 15 of the Instructions to Bidders?

11. ____The Bidder is aware of the groundwater conditions and dewatering requirements on the Site. Furthermore, Bidder has carefully studied site conditions, tests, investigations, and technical data which may affect the cost, progress, or performance of the Work.

12._____Has Bidder attended the non-mandatory pre-bid conference?

THIS PAGE WAS INTENTIONALLY LEFT BLANK

City of Moscow, Idaho
Latah County

Sixth Street Crossing Over Paradise Creek

INSTRUCTIONS TO BIDDERS

Table of Contents

Page

Article 1 – Defined Terms 1
Article 2 – Copies of Bidding Documents 1
Article 3 – Qualifications of Bidders 1
Article 4 – Examination of Bidding Documents, Other Related Data, and Site 2
Article 5 – Pre-Bid Conference 4
Article 6 – Site and Other Areas 4
Article 7 – Interpretations and Addenda 5
Article 8 – Bid Security 5
Article 9 – Contract Times 5
Article 10 – Liquidated Damages 5
Article 11 – Substitute and "Or-Equal" Items 6
Article 12 – Subcontractors, Suppliers and Others 6
Article 13 – Preparation of Bid 6
Article 14 – Basis of Bid; Comparison of Bids 7
Article 15 – Submittal of Bid 7
Article 16 – Modification and Withdrawal of Bid 8
Article 17 – Opening of Bids 8
Article 18 – Bids to Remain Subject to Acceptance 9
Article 19 – Evaluation of Bids and Award of Contract 9
Article 20 – Contract Security and Insurance 9
Article 21 – Signing of Agreement 9
Article 22 – Sales and Use Taxes 10
Article 23 – Retainage 10
Article 24 – Federal Participation Disclosure 10
Article 25 – Not Used 10

THIS PAGE WAS INTENTIONALLY LEFT BLANK

ARTICLE 1 – DEFINED TERMS

1.01 Terms used in these Instructions to Bidders have the meanings indicated in the General Conditions and Supplementary Conditions. Additional terms used in these Instructions to Bidders have the meanings indicated below:

A. *Bidder* – One who submits a Bid directly to the Owner, as distinct from a Sub-Bidder, who submits a Bid to a Bidder.

B. *Issuing Office* – The office from which the Bidding Documents are to be issued and where the bidding procedures are to be administered. The Issuing Office for this project is:

J-U-B ENGINEERS, Inc.
201 S. Jackson St.
Moscow, ID 83843
(208) 746-9010

Electronic copies of the Contract Documents shall be obtained as described in the Invitation to Bid.

C. *Owner* – The individual or entity with whom Contractor has entered into the Agreement and for whom the Work is to be performed. The Owner for this project is:

City of Moscow
206 East 3rd Street
Moscow, Idaho 83843

ARTICLE 2 – COPIES OF BIDDING DOCUMENTS

2.01 Complete sets of the Bidding Documents in the number and for the deposit sum, if any, stated in the Invitation to Bid may be obtained from the Issuing Office. The deposit for the Bidding Documents is ***not*** refundable.

2.02 Complete sets of Bidding Documents shall be used in preparing Bids; neither Owner nor Engineer assumes any responsibility for errors or misinterpretations resulting from the use of incomplete sets of Bidding Documents.

2.03 Owner and Engineer, in making copies of Bidding Documents available on the above terms, do so only for the purpose of obtaining Bids for the Work and do not authorize or confer a license or grant for any other use.

ARTICLE 3 – QUALIFICATIONS OF BIDDERS

3.01 To demonstrate Bidder's qualifications to perform the Work, within five days of Owner's request, Bidder shall submit written evidence as may be called for below.

A. See 13.11.

B. See 3.03

3.02 Bidder is advised to carefully review those portions of the Bid Form requiring Bidder's representations and certifications.

3.03 Idaho Code 54-1902 requires Bidder and subcontractors to have the appropriate Public Works Contractor's License to submit a Bid or proposal for this project. Public Works Contractor License Number shall be submitted with the Bid where indicated on the Bid Form.

ARTICLE 4 – EXAMINATION OF BIDDING DOCUMENTS, OTHER RELATED DATA, AND SITE

4.01 *Subsurface and Physical Conditions*

A. The Supplementary Conditions identify:

1. Those reports known to Owner of explorations and tests of subsurface conditions at or contiguous to the Site.

2. Those drawings known to Owner of physical conditions relating to existing surface or subsurface structures at the Site (except Underground Facilities).

B. Copies of reports and drawings referenced in Paragraph 4.01.A will be made available by Owner to any Bidder on request at the cost of reproduction. Those reports and drawings are not part of the Contract Documents, but the "technical data" contained therein upon which Bidder is entitled to rely as provided in Paragraph 4.02 of the General Conditions has been identified and established in Paragraph 4.02 of the Supplementary Conditions. Bidder is responsible for any interpretation or conclusion Bidder draws from any "technical data" or any other data, interpretations, opinions, or information contained in such reports or shown or indicated in such drawings.

4.02 *Underground Facilities*

A. Information and data shown or indicated in the Bidding Documents with respect to existing Underground Facilities at or contiguous to the Site is based upon information and data furnished to Owner and Engineer by owners of such Underground Facilities, including Owner, or others.

4.03 *Hazardous Environmental Condition*

A. The Supplementary Conditions identify any reports and drawings known to Owner relating to a Hazardous Environmental Condition identified at the Site.

B. Copies of reports and drawings referenced in Paragraph 4.03.A will be made available by Owner to any Bidder on request at the cost of reproduction. Those reports and drawings are not part of the Contract Documents, but the "technical data" contained therein upon which Bidder is entitled to rely as provided in Paragraph 4.06 of the General Conditions has been identified and established in Paragraph 4.06 of the Supplementary Conditions. Bidder is responsible for any interpretation or conclusion Bidder draws from any "technical data" or any other data, interpretations, opinions, or information contained in such reports or shown or indicated in such drawings.

4.04 Provisions concerning responsibilities for the adequacy of data furnished to prospective Bidders with respect to subsurface conditions, other physical conditions, and Underground Facilities, and possible changes in the Bidding Documents due to differing or unanticipated subsurface or physical conditions appear in Paragraphs 4.02, 4.03, and 4.04 of the General Conditions. Provisions concerning responsibilities for the adequacy of data furnished to prospective Bidders with respect to a Hazardous Environmental Condition at the Site, if any, and possible changes in the Contract Documents due to any Hazardous Environmental Condition uncovered or revealed at the Site which was not shown or indicated in the Drawings or Specifications or identified in the Contract Documents to be within the scope of the Work, appear in Paragraph 4.06 of the General Conditions.

4.05 On request, Owner will provide Bidder access to the Site to conduct such examinations, investigations, explorations, tests, and studies as Bidder deems necessary for submission of a Bid. Bidder shall fill all holes and clean up and restore the Site to its former condition upon completion of such explorations, investigations, tests, and studies. Bidder shall comply with all applicable Laws and Regulations relative to excavation and utility locates.

4.06 A. If applicable, reference is made to Article 7 of the Supplementary Conditions for the identification of the general nature of other work that is to be performed at the Site by Owner or others (such as utilities and other prime contractors) that relates to the Work contemplated by these Bidding Documents. On request, Owner will provide to each Bidder for examination access to or copies of contract documents (other than portions thereof related to price) for such other work.

B. Paragraph 6.13.C of the General Conditions indicates that if an Owner safety program exists, it will be noted in the Supplementary Conditions.

4.07 It is the responsibility of each Bidder before submitting a Bid to:

A. examine and carefully study the Bidding Documents, and the other related data identified in the Bidding Documents;

B. visit the Site and become familiar with and satisfy Bidder as to the general, local, and Site conditions that may affect cost, progress, and performance of the Work;

C. become familiar with and satisfy Bidder as to all federal, state, and local Laws and Regulations that may affect cost, progress, and performance of the Work;

D. carefully study all: (1) reports of explorations and tests of subsurface conditions at or contiguous to the Site and all drawings of physical conditions relating to existing surface or subsurface structures at the Site (except Underground Facilities) that have been identified in Paragraph 4.02 of the Supplementary Conditions as containing reliable "technical data;

E. consider the information known to Bidder; information commonly known to contractors doing business in the locality of the Site; information and observations obtained from visits to the Site; the Bidding Documents; and the Site-related reports and drawings identified in the Bidding Documents, with respect to the effect of such information, observations, and documents on (1) the cost, progress, and performance of the Work; (2) the means, methods, techniques, sequences, and

procedures of construction to be employed by Bidder, including applying any specific means, methods, techniques, sequences, and procedures of construction expressly required by the Bidding Documents; and (3) Bidder's safety precautions and programs;

F. agree at the time of submitting its Bid that no further examinations, investigations, explorations, tests, studies, or data are necessary for the determination of its Bid for performance of the Work at the price(s) bid and within the times required, and in accordance with the other terms and conditions of the Bidding Documents;

G. become aware of the general nature of the work to be performed by Owner and others at the Site that relates to the Work as indicated in the Bidding Documents;

H. promptly give Engineer written notice of all conflicts, errors, ambiguities, or discrepancies that Bidder discovers in the Bidding Documents and confirm that the written resolution thereof by Engineer is acceptable to Bidder; and

I. determine that the Bidding Documents are generally sufficient to indicate and convey understanding of all terms and conditions for the performance of the Work.

4.08 The submission of a Bid will constitute an incontrovertible representation by Bidder that Bidder has complied with every requirement of this Article 4, that without exception the Bid is premised upon performing and furnishing the Work required by the Bidding Documents and applying any specific means, methods, techniques, sequences, and procedures of construction that may be shown or indicated or expressly required by the Bidding Documents, that Bidder has given Engineer written notice of all conflicts, errors, ambiguities, and discrepancies that Bidder has discovered in the Bidding Documents and the written resolutions thereof by Engineer are acceptable to Bidder, and that the Bidding Documents are generally sufficient to indicate and convey understanding of all terms and conditions for performing and furnishing the Work.

ARTICLE 5 – PRE-BID CONFERENCE

5.01 A pre-Bid conference will be held at the time and location indicated in the Invitation to Bid. Representatives of Owner and Engineer will be present to discuss the Project. Bidders are encouraged to attend and participate in the conference. Engineer will transmit to all prospective Bidders of record such Addenda as Engineer considers necessary in response to questions arising at the conference. Oral statements may not be relied upon and will not be binding or legally effective.

ARTICLE 6 – SITE AND OTHER AREAS

6.01 The Site is identified in the Bidding Documents. Easements for permanent structures or permanent changes in existing facilities are to be obtained and paid for by Owner unless otherwise provided in the Bidding Documents. All additional lands and access thereto required for temporary construction facilities, construction equipment, or storage of materials and equipment to be incorporated in the Work are to be obtained and paid for by Contractor.

ARTICLE 7 – INTERPRETATIONS AND ADDENDA

7.01 All questions about the meaning or intent of the Bidding Documents are to be submitted to Engineer in writing. Interpretations or clarifications considered necessary by Engineer in response to such questions will be issued by Addenda mailed or delivered to all parties recorded by Engineer as having received the Bidding Documents. Questions received less than ten days prior to the date for opening of Bids may not be answered. Only questions answered by Addenda will be binding. Oral and other interpretations or clarifications will be without legal effect.

7.02 Addenda may be issued to clarify, correct, or change the Bidding Documents as deemed advisable by Owner or Engineer.

7.03 Where discrepancies occur in the Contract Documents, the most stringent requirement will dictate.

ARTICLE 8 – BID SECURITY

8.01 A Bid must be accompanied by Bid security made payable to Owner in an amount of 5% percent of Bidder's maximum Bid price and in the form of cash, a certified check, cashier's check, ~~bank money order~~, or a Bid bond (on the form attached) issued by a surety meeting the requirements of Paragraphs 5.01 and 5.02 of the General Conditions.

8.02 The Bid security of the Successful Bidder will be retained until such Bidder has executed the Contract Documents, furnished the required contract security and met the other conditions of the Notice of Award, whereupon the Bid security will be returned. If the Successful Bidder fails to execute and deliver the Contract Documents and furnish the required contract security within 15 days after the Notice of Award, Owner may consider Bidder to be in default, annul the Notice of Award, and the Bid security of that Bidder will be forfeited in accordance with State law. Such forfeiture shall be Owner's exclusive remedy if Bidder defaults. The Bid security of other Bidders whom Owner believes to have a reasonable chance of receiving the award may be retained by Owner until the earlier of seven days after the Effective Date of the Agreement or 61 days after the Bid opening, whereupon Bid security furnished by such Bidders will be returned.

8.03 Bid security of other Bidders whom Owner believes do not have a reasonable chance of receiving the award will be returned within fourteen days after the Bid opening.

ARTICLE 9 – CONTRACT TIMES

9.01 The number of days within which, or the dates by which, the Work is to be substantially completed and ready for final payment are set forth in the Agreement.

ARTICLE 10 – LIQUIDATED DAMAGES

10.01 Provisions for liquidated damages are set forth in the Agreement.

ARTICLE 11 – SUBSTITUTE AND "OR-EQUAL" ITEMS

11.01 The Contract, if awarded, will be on the basis of materials and equipment specified or described in the Bidding Documents without consideration of possible substitute or "or-equal" items. Whenever it is specified or described in the Bidding Documents that a substitute or "or-equal" item of material or equipment may be furnished or used by Contractor if acceptable to Engineer, application for such acceptance will not be considered by Engineer until after the Effective Date of the Agreement.

ARTICLE 12 – SUBCONTRACTORS, SUPPLIERS AND OTHERS

12.01 Contractor shall not be required to employ any Subcontractor, Supplier, individual, or entity against whom Contractor has reasonable objection.

12.02 Per Idaho Code 67-2310, Bidder shall include in his Bid the name, or names and address, or addresses, and Idaho Public Works Contractor License numbers of the Subcontractors who shall, in the event the Bidder secures the Contract, subcontract the plumbing, heating and air-conditioning work, and electrical work under the general Contract. Failure to name Subcontractors as required by this section shall render any Bid submitted by the Bidder unresponsive and void. Use naming of subcontractors form 00440.

ARTICLE 13 – PREPARATION OF BID

13.01 The Bid Form is included with the Bidding Documents. Additional copies may be obtained from Engineer.

13.02 All blanks on the Bid Form shall be completed in ink and the Bid Form signed. Erasures or alterations shall be initialed in ink by the person signing the Bid Form. A Bid price shall be indicated for each item listed therein or the words "No Bid," "No Change," or "Not Applicable" entered.

13.03 A Bid by a corporation shall be executed in the corporate name by the president or a vice-president or other corporate officer accompanied by evidence of authority to sign. The corporate seal shall be affixed and attested by the secretary or an assistant secretary. The corporate address and state of incorporation shall be shown.

13.04 A Bid by a partnership shall be executed in the partnership name and signed by a partner (whose title must appear under the signature), accompanied by evidence of authority to sign. The official address of the partnership shall be shown.

13.05 A Bid by a limited liability company shall be executed in the name of the firm by a member and accompanied by evidence of authority to sign. The state of formation of the firm and the official address of the firm shall be shown.

13.06 A Bid by an individual shall show the Bidder's name and official address.

13.07 A Bid by a joint venture shall be executed by each joint venturer in the manner indicated on the Bid Form. The official address of the joint venture shall be shown. Include evidence of authority to sign.

13.08 All names shall be printed or typed in ink below the signatures.

13.09 The Bid shall contain an acknowledgment of receipt of all Addenda, the numbers of which shall be filled in on the Bid Form.

13.10 Postal and e-mail addresses and telephone number for communications regarding the Bid shall be shown.

13.11 The Bid shall contain evidence of Bidder's authority and qualification to do business in Idaho. If the project is federally funded, signing the Bid Form constitutes a covenant to obtain such qualification prior to award of the Contract. Bidder's Idaho Public Works Contractor License Number shall also be shown on the Bid form.

ARTICLE 14 – BASIS OF BID; COMPARISON OF BIDS

~~14.01 *Lump Sum*~~

~~A. Bidders shall submit a Bid on a lump sum basis for the Base Bid and include a separate price for each alternate described in the Bidding Documents as provided for in the Bid Form. The price for each alternate will be the amount added to or deleted from the base Bid if Owner selects the alternate. Discrepancies between the indicated sum of any column of figures and the correct sum thereof will be resolved in favor of the correct sum. Discrepancies between words and figures will be resolved in favor of the words.~~

14.02 *Unit Price*

A. Bidders shall submit a Bid on a unit price basis for each item of Work listed in the Bid Schedule.

B. The total of all estimated prices will be the sum of the products of the estimated quantity of each item and the corresponding unit price. The final quantities and Contract Price will be determined in accordance with Paragraph 11.03 of the General Conditions.

C. Discrepancies between multiplication of units of Work and unit prices will be resolved in favor of the unit prices. Discrepancies between the indicated sum of any column of figures and the correct sum thereof will be resolved in favor of the correct sum.

14.03 *Allowances*

A. Not used.

ARTICLE 15 – SUBMITTAL OF BID

15.01 With each copy of the Bidding Documents, a Bidder is furnished the Bid Bond Form. The Bid Form is to be completed and submitted with all the attachments outlined in Article 7 of the Bid Form.

15.02 A Bid shall be submitted no later than the date and time prescribed and at the place indicated in the advertisement or invitation to bid and shall be enclosed in a plainly marked package with the Project title (and, if applicable, the designated portion of the Project for which the Bid is submitted), the name and address of Bidder, and shall be accompanied by the Bid security and other required documents. If a Bid is sent by mail or other delivery system, the sealed envelope containing the Bid shall be enclosed in a separate package plainly marked on the outside with the notation "BID ENCLOSED." When using the mail or other delivery system, the Bidder is totally responsible for the mail or other delivery system delivering the Bid at the place and prior to the time indicated in the Invitation to Bid. A mailed Bid shall be addressed to *Owner at address in Article 1.01 of Bid Form*.

ARTICLE 16 – MODIFICATION AND WITHDRAWAL OF BID

16.01 A Bid may be modified or withdrawn by an appropriate document duly executed in the same manner that a Bid must be executed and delivered to the place where Bids are to be submitted prior to the date and time for the opening of Bids.

~~16.02 If within 24 hours after Bids are opened any Bidder files a duly signed written notice with Owner and promptly thereafter demonstrates to the reasonable satisfaction of Owner that there was a material and substantial mistake in the preparation of its Bid, that Bidder may withdraw its Bid, and the Bid security will be returned. Thereafter, if the Work is rebid, that Bidder will be disqualified from further bidding on the Work.~~

16.03 Relief from Bids. (a) If the Owner determines that a Bidder is entitled to relief from a Bid because of mistake, the Owner shall prepare a report in writing to document the facts establishing the existence of each element required in Section 54-1904C, Idaho Code. The Owner shall make the report available for inspection as a public record. (b) A Bidder claiming a mistake satisfying all the conditions of Section 54-1904C, Idaho Code, shall be entitled to relief from the Bid and have any Bid Security returned by the public entity. Bidders not satisfying the conditions found in Section 54-1904C, Idaho Code, shall forfeit any Bid Security. Bidders failing to execute a Contract and not satisfying the conditions of a mistake shall also forfeit any Bid Security.

16.04 Grounds for Relief. The Bidder shall establish to the satisfaction of the public entity that:

a) A clerical or mathematical mistake was made;

b) The Bidder gave the public entity written notice within five (5) calendar days after the opening of the bids of the mistake, specifying in the notice in detail how the mistake occurred; and

c) The mistake was material.

ARTICLE 17 – OPENING OF BIDS

17.01 Bids will be opened at the time and place indicated in the Invitation to Bid and, unless obviously non-responsive, read aloud publicly. An abstract of the amounts of the base Bids and major alternates, if any, will be made available to Bidders after the opening of Bids.

ARTICLE 18 – BIDS TO REMAIN SUBJECT TO ACCEPTANCE

18.01 All Bids will remain subject to acceptance for the period of time stated in the Bid Form, but Owner may, in its sole discretion, release any Bid and return the Bid security prior to the end of this period.

ARTICLE 19 – EVALUATION OF BIDS AND AWARD OF CONTRACT

19.01 Owner reserves the right to reject any or all Bids, including without limitation, nonconforming, nonresponsive, unbalanced, or conditional Bids and to award the bid in conformance with Title 67, Chapter 28 of the Idaho Code. Owner further reserves the right to reject the Bid of any Bidder whom it finds, after reasonable inquiry and evaluation, to not be responsible. Owner also reserves the right to waive all informalities not involving price, time, or changes in the Work and to negotiate contract terms with the Successful Bidder.

19.02 More than one Bid for the same Work from an individual or entity under the same or different names will not be considered. Reasonable grounds for believing that any Bidder has an interest in more than one Bid for the Work may be cause for disqualification of that Bidder and the rejection of all Bids in which that Bidder has an interest.

19.03 In evaluating Bids, Owner will consider whether or not the Bids comply with the prescribed requirements, and such alternates (if any), unit prices and other data, as may be requested in the Bid Form or prior to the Notice of Award.

19.04 If the Contract is to be awarded, the Owner will award the Contract to the lowest responsive and responsible Bidder whose Bid is acceptable to the Owner. The basis of award will be based on the lowest Base Bid.

19.05 In order for a Bid to be considered responsive, the Bid Form must be completed, including the Base Bid and all listed Additive Alternates.

ARTICLE 20 – CONTRACT SECURITY AND INSURANCE

20.01 Article 5 of the General Conditions, as may be modified by the Supplementary Conditions, sets forth Owner's requirements as to performance and payment bonds and insurance. When the Successful Bidder delivers the executed Agreement to Owner, it shall be accompanied by such bonds.

ARTICLE 21 – SIGNING OF AGREEMENT

21.01 When Owner issues a Notice of Award to the Successful Bidder, it shall be accompanied by the required number of unsigned counterparts of the Agreement along with the other Contract Documents which are identified in the Agreement as attached thereto. Within 15 days thereafter, Successful Bidder shall sign and deliver the required number of counterparts of the Agreement and attached documents to Owner. Within ten days thereafter, Owner shall deliver one fully signed counterpart to Successful Bidder with a complete set of the Drawings with appropriate identification.

ARTICLE 22 – SALES AND USE TAXES

~~22.01 Owner is exempt from state sales and use taxes on materials and equipment to be incorporated in the Work. (Exemption No.). Said taxes shall not be included in the Bid. Refer to Paragraph 6.10 of the Supplementary Conditions for additional information.~~

22.01 Refer to Article 6 of the General Conditions for tax requirements.

ARTICLE 23 – RETAINAGE

23.01 Provisions for retainage are as established in the Supplementary Conditions. ~~Provisions concerning Contractor's rights to deposit securities in lieu of retainage are set forth in the Agreement.~~

ARTICLE 24 – FEDERAL PARTICIPATION DISCLOSURE

24.01 This project will be partially funded with Federal funds from the United States Department of Commerce, Economic Development Administration and therefore is subject to the Federal laws and regulations associated with that program.

ARTICLE 25 – Not Used

City of Moscow, Idaho
Latah County
Sixth Street Crossing Over Paradise Creek

BID FORM

Table of Contents

Page

Article 1 – Bid Recipient 1

Article 2 – Bidder's Acknowledgements 1

Article 3 – Bidder's Representations 1

Article 4 – Bidder's Certification 2

Article 5 – Basis of Bid 3

Article 6 – Time of Completion 5

Article 7 – Attachments to This Bid 6

Article 8 – Defined Terms 6

Article 9 – Bid Submittal 6

THIS PAGE WAS INTENTIONALLY LEFT BLANK

ARTICLE 1 – BID RECIPIENT

1.01 This Bid is submitted to:

City of Moscow Attn: Deputy City Clerk
504 South Washington Street
Moscow, Idaho 83843

1.02 The undersigned Bidder proposes and agrees, if this Bid is accepted, to enter into an Agreement with Owner in the form included in the Bidding Documents to perform all Work as specified or indicated in the Bidding Documents for the prices and within the times indicated in this Bid and in accordance with the other terms and conditions of the Bidding Documents.

ARTICLE 2 – BIDDER'S ACKNOWLEDGEMENTS

2.01 Bidder accepts all of the terms and conditions of the Invitation to Bid and Instructions to Bidders, including without limitation those dealing with the disposition of Bid security. This Bid will remain subject to acceptance for 60 days after the Bid opening, or for such longer period of time that Bidder may agree to in writing upon request of Owner.

ARTICLE 3 – BIDDER'S REPRESENTATIONS

3.01 In submitting this Bid, Bidder represents that:

A. Bidder has examined and carefully studied the Bidding Documents, other related data identified in the Bidding Documents, and the following Addenda, receipt of ~~all~~ which is hereby acknowledged:

Addendum No.	Addendum Date
_____	_____
_____	_____
_____	_____

B. Bidder has visited the Site and become familiar with and is satisfied as to the general, local, and Site conditions that may affect cost, progress, and performance of the Work.

C. Bidder is familiar with and is satisfied as to all Laws and Regulations that may affect cost, progress, and performance of the Work.

D. Bidder has carefully studied all: (1) reports of explorations and tests of subsurface conditions at or contiguous to the Site and all drawings of physical conditions relating to existing surface or subsurface structures at the Site (except Underground Facilities) that have been identified in SC-4.02 as containing reliable "technical data," and (2) reports and drawings of Hazardous Environmental Conditions, if any, at the Site that have been identified in SC-4.06 as containing reliable "technical data."

E. Bidder has considered the information known to Bidder; information commonly known to contractors doing business in the locality of the Site; information and observations obtained from visits to the Site; the Bidding Documents; and the Site-related reports and drawings identified in the Bidding Documents, with respect to the effect of such information, observations, and documents on (1) the cost, progress, and performance of the Work; (2) the means, methods, techniques, sequences, and procedures of construction to be employed by Bidder, including applying the specific means, methods, techniques, sequences, and procedures of construction expressly required by the Bidding Documents; and (3) Bidder's safety precautions and programs.

F. Bidder has obtained and carefully studied (or assumes responsibility for having done so) all additional or supplementary examinations, investigations, explorations, test, studies and data concerning conditions (surface, subsurface and Underground Facilities) at or contiguous to the Site which may affect cost, progress, or performance of the Work or which relate to any aspect of the means, methods, techniques, sequences, and procedures of construction to be employed by Bidder, including applying the specific means, methods, techniques, sequences, and procedures of construction expressly required by the Bidding Documents to be employed by Bidder safety precautions and programs incident thereto.

G. Based on the information and observations referred to in Paragraph 3.01.E above, Bidder does not consider that further examinations, investigations, explorations, tests, studies, or data are necessary for the determination of this Bid for performance of the Work at the price(s) bid and within the times required, and in accordance with the other terms and conditions of the Bidding Documents.

H. Bidder is aware of the general nature of work to be performed by Owner and others at the Site that relates to the Work as indicated in the Bidding Documents.

I. Bidder has given Engineer written notice of all conflicts, errors, ambiguities, or discrepancies that Bidder has discovered in the Bidding Documents, and the written resolution thereof by Engineer is acceptable to Bidder.

J. The Bidding Documents are generally sufficient to indicate and convey understanding of all terms and conditions for the performance of the Work for which this Bid is submitted.

ARTICLE 4 – BIDDER'S CERTIFICATION

4.01 Bidder certifies that:

A. This Bid is genuine and is not made in the interest of or on behalf of any undisclosed individual or entity and is not submitted in conformity with any collusive agreement or rules of any group, association, organization, or corporation;

B. Bidder has not directly or indirectly induced or solicited any other Bidder to submit a false or sham Bid;

C. Bidder has not solicited or induced any individual or entity to refrain from bidding; and

D. Bidder has not engaged in corrupt, fraudulent, collusive, or coercive practices in competing for the Contract. For the purposes of this Paragraph 4.01.D:

1. "corrupt practice" means the offering, giving, receiving, or soliciting of anything of value likely to influence the action of a public official in the bidding process;

2. "fraudulent practice" means an intentional misrepresentation of facts made (a) to influence the bidding process to the detriment of Owner, (b) to establish bid prices at artificial non-competitive levels, or (c) to deprive Owner of the benefits of free and open competition;

3. "collusive practice" means a scheme or arrangement between two or more Bidders, with or without the knowledge of Owner, a purpose of which is to establish bid prices at artificial, non-competitive levels; and

4. "coercive practice" means harming or threatening to harm, directly or indirectly, persons or their property to influence their participation in the bidding process or affect the execution of the Contract.

ARTICLE 5 – BASIS OF BID

5.01 Bidder will complete the Work in accordance with the Contract Documents for the following price(s):

A. Bid prices listed shall include all applicable taxes and fees.

BASE BID – SIXTH STREET CROSSING OVER PARADISE CREEK

Item No.	*Item Description*	*Estimated Quantity*	*Unit*	*Unit Price*	*Total Price*
1	*CLEARING AND GRUBBING*	*0.14*	*AC*	*$*	*$*
2	*REMOVAL OF OBSTRUCTIONS*	*1*	*LS*	*$*	*$*
3	*REMOVAL OF BITUMINOUS SURFACE*	*715*	*SY*	*$*	*$*
4	*EXCAVATION*	*558*	*CY*	*$*	*$*
5	*UNSUITABLE MATERIAL EXCAVATION*	*100*	*CY*	*$*	*$*
6	*DUST ABATEMENT WATER*	*100*	*MG*	*$*	*$*
7	*SEEDBED PREPARATION*	*0.05*	*AC*	*$*	*$*
8	*SEEDING*	*0.05*	*AC*	*$*	*$*
9	*MULCHING*	*0.05*	*AC*	*$*	*$*
10	*LOOSE RIPRAP*	*220*	*CY*	*$*	*$*
11	*12" STORM DRAIN PIPE, CLASS C-900 PVC*	*157*	*LF*	*$*	*$*
12	*STORM DRAIN MANHOLE - TYPE A*	*2*	*EA*	*$*	*$*
13	*CATCH BASIN - TYPE I*	*2*	*EA*	*$*	*$*

14	6 INCH VERTICAL CURB (NO GUTTER), TYPE "A"	143	LF	$	$
15	STANDARD 6 INCH VERTICAL CURB AND GUTTER	314	LF	$	$
16	CONCRETE SIDEWALKS, THICKNESS 5"	287	SY	$	$
17	CONCRETE DRIVEWAY APPROACH (6" THICK)	25	SY	$	$
18	CRUSHED AGGREGATE FOR BASE TYPE I	436	TON	$	$
19	CRUSHED AGGREGATE FOR BASE TYPE II	580	TON	$	$
20	DILUTED EMULSIFIED ASPHALT FOR TACK COAT	30	GAL	$	$
21	PLANT MIX PAVEMENT	225	TON	$	$
22	STABILIZED CONSTRUCTION ENTRANCE	2	EA	$	$
23	STRAW BALES	100	LF	$	$
24	SILT FENCE	250	LF	$	$
25	TRAFFIC CONTROL SIGNS, CLASS B	262	SF	$	$
26	TRAFFIC CONTROL BARRICADES, TYPE III	4	EA	$	$
27	TRAFFIC CONTROL MAINTENANCE	120	MH	$	$
28	RIPRAP/EROSION CONTROL GEOTEXTILE	192	SY	$	$
29	SUBGRADE SEPARATION GEOTEXTILE	1397	SY	$	$
30	CONTRACTOR FURNISHED CONSTRUCTION SURVEYING AND STAKING	1	LS	$	$
31	REMOVAL OF EXISTING WATER MAIN - SIZE 8"	384	LF	$	$
32	REMOVAL OF EXISTING WATER MAIN - SIZE 24"	163	LF	$	$
33	REMOVAL OF EXISTING HYDRANT	3	EA	$	$
34	MISC. SURFACE RESTORATION (NATURAL GROUND)	443	LF	$	$
35	STEEL CASING SLEEVE - SIZE 18" (0.375" THICK)	20	LF	$	$

36	STEEL CASING SLEEVE - SIZE 36" (0.375" THICK)	40	LF	$	$
37	WATER MAIN PIPE - SIZE 10" - TYPE C900, CLASS 235 PVC (DR18)	384	LF	$	$
38	WATER MAIN PIPE - SIZE 24" - TYPE C900, CLASS 235 PVC (DR18)	179	LF	$	$
39	CONNECT TO EXISTING WATER MAIN	4	EA	$	$
40	GATE VALVE - SIZE 10"	3	EA	$	$
41	HYDRANT	2	EA	$	$
42	AIR RELEASE VALVE ASSEMBLY	3	EA	$	$
43	REMOVAL OF CULVERTS	3	EA	$	$
44	BORROW	150	CY	$	$
45	STRUCTURAL EXCAVATION SCHEDULE 1	400	CY	$	$
46	COMPACTING BACKFILL	350	CY	$	$
47	DEWATERING	1	LS	$	$
48	REINFORCING STEEL	42480	LB	$	$
49	CONCRETE (CAST-IN-PLACE) - CLASS 4000A	83	CY	$	$
50	BRIDGE - 24' SPAN X 11' RISE	1	LS	$	$
51	HELICAL PULLDOWN MICROPILE (HPM)	79	EA	$	$
52	PEDESTRIAN/BICYCLE AND TRAFFIC RAILING	135	LF	$	$
53	MOBILIZATION	1	LS	$	$

*BASE BID TOTAL PRICE*_____

(use words)

ARTICLE 6 – TIME OF COMPLETION

6.01 Bidder agrees that the Work will be substantially complete and will be completed and ready for final payment in accordance with Paragraph 14.07 of the General Conditions on or before the dates or within the number of calendar days indicated in the Agreement.

6.02 Bidder accepts the provisions of the Agreement as to liquidated damages.

6.03 Bidder agrees to comply with Idaho Code 44-1001 through 44-1005, regarding employment of Idaho residents.

ARTICLE 7 – ATTACHMENTS TO THIS BID

7.01 The following documents are submitted with and made a condition of this Bid:

A. Required Bid security in accordance with Article 8 of the Instructions to Bidders;

B. Not used;

C. Bidder shall include in his Bid the name, or names and address, or addresses, and Idaho Public Works Contractor License Numbers of the Subcontractors who shall, in the event the Bidder secures the Contract, subcontract the plumbing, heating and air-conditioning work, and electrical work under the general Contract;

D. Contractor's Non-Collusion Affidavit;

E. Anti-Discrimination Affidavit;

F. Bidder's State of Idaho Public Works Contractor's License No.: _____.

G. U.S. Department of Commerce Economic Development Administration (EDA) Contracting Provisions for Construction Projects

H. EDA Site Sign Specification

I. Notice of Requirement for Affirmative Action to Ensure Equal Employment Opportunity

J. Form CD-215 Certification Regarding Lobbying Lower Tier Covered Transactions

ARTICLE 8 – DEFINED TERMS

8.01 The terms used in this Bid with initial capital letters have the meanings stated in the Instructions to Bidders, the General Conditions, and the Supplementary Conditions.

ARTICLE 9 – BID SUBMITTAL

9.01 This Bid is submitted by:

If Bidder is:

An Individual

Name (typed or printed): _____

By: _____
(Individual's signature)

Doing business as: _____

A Partnership

Partnership Name: _____

By: _____
(Signature of general partner -- attach evidence of authority to sign)

Name (typed or printed): _____

Date of Qualification to do business in Idaho is ____/____/____.

A Corporation

Corporation Name: _____ (SEAL)

State of Incorporation: _____
Type (General Business, Professional, Service, Limited Liability):_____

By: _____
(Signature -- attach evidence of authority to sign)

Name (typed or printed): _____

Title: _____
(CORPORATE SEAL)

Attest _____

Date of Qualification to do business in Idaho is ____/____/____.

A Joint Venture

Name of Joint Venture: _____

First Joint Venturer Name: _____ (SEAL)

By: _____
(Signature of first joint venture partner -- attach evidence of authority to sign)

Name (typed or printed): _____

Title: _____

Date of Qualification to do business in Idaho is ____/____/____.

Second Joint Venturer Name: _____(SEAL)

By: _____
(Signature of second joint venture partner -- attach evidence of authority to sign)

Name (typed or printed): _____

Title: _____

Date of Qualification to do business in Idaho is ____/____/____.

(Each joint venturer must sign. The manner of signing for each individual, partnership, and corporation that is a party to the joint venture should be in the manner indicated above.)

Bidder's Business Address _____

_____

Phone No. _____ Fax No. _____

E-mail _____ _____

SUBMITTED on _____, 20____.

Idaho Public Works Contractor License No. _____.

Contractor's Non-Collusion Affidavit

State of _____
) SS
County of _____

Bid for _____, being first duly sworn, deposes, and says that he/she is _____ [sole owner, a partner, president, secretary, etc.] of, _____ _____ [Bidder], the party making the foregoing Bid; that such Bid is not made in the interest of or on behalf of any undisclosed person, partnership, company, association, organization or corporation; that such Bid is genuine and not collusive or sham; that said Bidder has not directly or indirectly induced or solicited any other Bidder to put in a false or sham Bid and has not directly or indirectly colluded, conspired, connived or agreed with any Bidder or anyone else to put in a sham Bid, nor that anyone shall refrain from bidding; that said Bidder has not in any manner, directly or indirectly, sought by agreement, communication or conference with anyone to fix the Bid Price of said Bidder or of any other Bidder, nor to fix any overhead, profit or cost element of such Bid Price, nor of that of any other Bidder, nor to secure any advantage against the public body awarding the Contract or anyone interested in the proposed Contract; that all statements contained in such Bid are true; and, further, that said Bidder has not directly or indirectly submitted his Bid Price or any breakdown thereof, nor the contents thereof, nor divulged information or data relative thereto, nor paid and will not pay any fee in connection therewith to any corporation, partnership, company, association, organization, bid depository, nor to any member or agent thereof, nor to any other individual except to such person(s) as has/have a partnership or other financial interest with said Bidder in his general business.

Signed:_____

Title:_____

Subscribed and sworn to before me this _____
day of _____, 20__.

(SEAL)

Notary Public _____
State of _____
My Commission Expires _____

THIS PAGE WAS INTENTIONALLY LEFT BLANK

Anti-Discrimination Affidavit

STATE OF _____;

COUNTY OF _____;

The Bidder hereby covenants, stipulates and agrees that no person shall be discriminated against in the bidding of the services and/or materials herein under and that the Bidder shall not refuse to hire any person therefore because of such person's race, creed, sex, color, or national origin, unless based on a bona fide occupational qualification. Also, the Bidder will in no manner discriminate against any person because of such person's race, creed, sex, color, or national origin. Any such discrimination shall be deemed a violation of this Bid and shall render this Bid subject to forfeiture.

_____

Contractor's Signature

Subscribed and sworn to before me this _____day of _____, 20__.

_____

Notary Public

State of _____

Residing at _____

My Commission Expires _____

THIS PAGE WAS INTENTIONALLY LEFT BLANK

BID BOND

Any singular reference to Bidder, Surety, Owner or other party shall be considered plural where applicable.

BIDDER *(Name and Address)*:

SURETY *(Name and Address of Principal Place of Business)*:

OWNER *(Name and Address)*:

BID
Bid Due Date:
Description *(Project Name and Include Location)*:

BOND
Bond Number:
Date *(Not earlier than Bid due date)*:
Penal sum _____ $ _____
(Written in Words) (Figures)

Surety and Bidder, intending to be legally bound hereby, subject to the terms set forth below, do each cause this Bid Bond to be duly executed by an authorized officer, agent, or representative.

BIDDER	**SURETY**
_____ (Seal)	_____ (Seal)
Bidder's Name and Corporate Seal	Surety's Name and Corporate Seal
By: _____	By: _____
Signature	Signature (Attach Power of Attorney)
_____	_____
Print Name	Print Name
_____	_____
Title	Title
Attest: _____	Attest: _____
Signature	Signature
_____	_____
Title	Title

Note: Above addresses are to be used for giving any required notice. Provide execution by any additional parties, such as joint venturers, if necessary.

1. Bidder and Surety, jointly and severally, bind themselves, their heirs, executors, administrators, successors, and assigns to pay to Owner upon default of Bidder the penal sum set forth on the face of this Bond. Payment of the penal sum is the extent of Bidder's and Surety's liability. Recovery of such penal sum under the terms of this Bond shall be Owner's sole and exclusive remedy upon default of Bidder.

2. Default of Bidder shall occur upon the failure of Bidder to deliver within the time required by the Bidding Documents (or any extension thereof agreed to in writing by Owner) the executed Agreement required by the Bidding Documents and any performance and payment bonds required by the Bidding Documents.

3. This obligation shall be null and void if:

3.1 Owner accepts Bidder's Bid and Bidder delivers within the time required by the Bidding Documents (or any extension thereof agreed to in writing by Owner) the executed Agreement required by the Bidding Documents and any performance and payment bonds required by the Bidding Documents, or

3.2 All Bids are rejected by Owner, or

3.3 Owner fails to issue a Notice of Award to Bidder within the time specified in the Bidding Documents (or any extension thereof agreed to in writing by Bidder and, if applicable, consented to by Surety when required by Paragraph 5 hereof).

4. Payment under this Bond will be due and payable upon default of Bidder and within 30 calendar days after receipt by Bidder and Surety of written notice of default from Owner, which notice will be given with reasonable promptness, identifying this Bond and the Project and including a statement of the amount due.

5. Surety waives notice of any and all defenses based on or arising out of any time extension to issue Notice of Award agreed to in writing by Owner and Bidder, provided that the total time for issuing Notice of Award including extensions shall not in the aggregate exceed 120 days from Bid due date without Surety's written consent.

6. No suit or action shall be commenced under this Bond prior to 30 calendar days after the notice of default required in Paragraph 4 above is received by Bidder and Surety and in no case later than one year after Bid due date.

7. Any suit or action under this Bond shall be commenced only in a court of competent jurisdiction located in the state in which the Project is located.

8. Notices required hereunder shall be in writing and sent to Bidder and Surety at their respective addresses shown on the face of this Bond. Such notices may be sent by personal delivery, commercial courier, or by United States Registered or Certified Mail, return receipt requested, postage pre-paid, and shall be deemed to be effective upon receipt by the party concerned.

9. Surety shall cause to be attached to this Bond a current and effective Power of Attorney evidencing the authority of the officer, agent, or representative who executed this Bond on behalf of Surety to execute, seal, and deliver such Bond and bind the Surety thereby.

10. This Bond is intended to conform to all applicable statutory requirements. Any applicable requirement of any applicable statute that has been omitted from this Bond shall be deemed to be included herein as if set forth at length. If any provision of this Bond conflicts with any applicable statute, then the provision of said statute shall govern and the remainder of this Bond that is not in conflict therewith shall continue in full force and effect.

11. The term "Bid" as used herein includes a Bid, offer, or proposal as applicable.

Naming of Subcontractors Form

Per Idaho Code, 67-2310, Bidder shall include in his or her Bid the names and address, and Idaho Public Works Contractor License Number of the Subcontractors who shall, in the event the Bidder secures the Contract, subcontract the plumbing, heating and air-conditioning work, and electrical work under the general Contract. Failure to name Subcontractors as required shall render any Bid submitted by the Bidder unresponsive and void.

Subcontractor Name and Address	Classification	License Number
_____	_____	_____
_____		
_____		
_____	_____	_____
_____		
_____		
_____	_____	_____
_____		
_____		
_____	_____	_____
_____		
_____		

NOTES TO USER

1. This form must be included for all bids.

THIS PAGE WAS INTENTIONALLY LEFT BLANK

City of Moscow
Latah County, Idaho
Sixth Street Crossing Over Paradise Creek

Section 1-B

Contract Forms

THIS PAGE WAS INTENTIONALLY LEFT BLANK

Notice of Award

Date: _____

Project: Sixth Street Crossing Over Paradise Creek	
Owner: City of Moscow, Idaho	Owner's Contract No.: 126-020
Contract: Sixth Street Crossing Over Paradise Creek	Engineer's Project No.: 20-21-010
Bidder:	
Bidder's Address: *[send Notice of Award Certified Mail, Return Receipt Requested]*	

You are notified that your Bid dated _____ for the above Contract has been considered. You are the Successful Bidder and are awarded a Contract for _____

The Contract Price of your Contract is _____ Dollars ($_____).

[Insert appropriate data if unit prices are used. Change language for cost-plus contracts.]

_____ copies of the proposed Contract Documents (except Drawings) accompany this Notice of Award.

_____ sets of the Drawings will be delivered separately or otherwise made available to you immediately.

You must comply with the following conditions precedent within [15] days of the date you receive this Notice of Award.

1. Deliver to the Owner [_____] fully executed counterparts of the Contract Documents.
2. Deliver with the executed Contract Documents the Contract security [Bonds] as specified in the Instructions to Bidders (Article 20) and General Conditions (Paragraph 5.01).
3. Other conditions precedent:

   _____

Failure to comply with these conditions within the time specified will entitle Owner to consider you in default, annul this Notice of Award, and declare your Bid security forfeited.

Within ten days after you comply with the above conditions, Owner will return to you one fully executed counterpart of the Contract Documents.

_____
Owner

By:_____
Authorized Signature

_____
Title

Copy to Engineer

THIS PAGE WAS INTENTIONALLY LEFT BLANK

CONSTRUCTION AGREEMENT
FOR SIXTH STREET CROSSING OVER PARADISE CREEK
BETWEEN CITY OF MOSCOW, IDAHO
AND _____

THIS CONSTRUCTION AGREEMENT FOR SIXTH STREET CROSSING OVER PARADISE CREEK BETWEEN CITY OF MOSCOW, IDAHO, AND _____ (hereinafter "Agreement"), dated this ____ day of _____, 2022, by and between City of Moscow, Idaho, a municipal corporation of the State of Idaho, 206 East Third Street, Moscow, Idaho, 83843 (hereinafter "CITY"), and _____ (hereinafter "CONTRACTOR"):

W I T N E S S E T H :

WHEREAS, pursuant to the invitation of CITY, extended through an "Invitation to Bid" see Attachment 'A', CONTRACTOR submitted a Bid Proposal containing an offer invited by said invitation; and

WHEREAS, CITY has determined that said offer was the lowest responsive Bid Proposal; and

WHEREAS, CITY has accepted CONTRACTOR's Bid Proposal;

NOW THEREFORE, the Parties to this Agreement, in consideration of the mutual covenants and stipulations set out, agree as follows:

ARTICLE 1.
CONTRACT DOCUMENTS

The Contract Documents which comprise the entire Agreement between CITY and CONTRACTOR concerning the work to be performed, are this Agreement, pages one (1) through _____, and the following:

1. Drawings, Specifications and Proposal, Attachment 'A' for: Sixth Street Crossing Over Paradise Creek**,** consisting of _____number of pages;
2. Bid Proposal of CONTRACTOR, dated _____, 2022, see Attachment 'B', consisting of _____number of pages;
3. Performance and Payment Bonds and Insurance Certificates;
4. Addenda, if applicable, Attachment 'C', consisting of _____number of pages; and
5. Change Orders, which may be delivered or issued after the effective date of this Agreement.

There are no Contract Documents other than those listed in Article 1. This Agreement may only be amended by change order as provided in the General Conditions of Attachment 'A'.

ARTICLE 2.
WORK

CONTRACTOR shall complete the entire work as specified, indicated and required under the Contract Documents, contained herein under Article 1. for CITY project (hereinafter "Project") titled:

"Sixth Street Crossing Over Paradise Creek"

ARTICLE 3.
CONTRACT TIME/SUBSTANTIAL COMPLETION

The work to be performed pursuant to this Agreement shall start no earlier than May 16, 2022 and be substantially completed by August 26, 2022. The work shall be substantially completed within one hundred (100) calendar days after receiving the Notice to Proceed. Final Completion of all work shall be accomplished within fifteen (15) calendar days after receiving Substantial Completion, unless adjustment of the Agreement time is made in accordance with the provisions of the Contract Documents. CONTRACTOR shall begin work in conformance with the Contract Documents.

CONTRACTOR and CITY recognize that time is of the essence and that CITY will suffer financial loss if the Project is not completed within the time specified above, unless approved extensions thereof are permitted in accordance with Article 12 of the General Conditions. The Parties also recognize the delays, expense, and difficulties involved in proving, in a legal or arbitration proceeding, the actual loss suffered by CITY if the Project is not completed on time. Accordingly, instead of requiring any such proof, CITY and CONTRACTOR agree that as liquidated damages for delay (but not as a penalty), CONTRACTOR shall pay CITY Two Thousand Five Hundred Dollars ($2,500) for each day that expires after the time specified above for Substantial Completion until the Project is substantially complete. After Substantial Completion, if CONTRACTOR shall neglect, refuse, or fail to complete the remaining Project within the Time of Completion or by any proper extension thereof granted by CITY, CONTRACTOR shall pay CITY Two Thousand Five Hundred Dollars ($2,500) for each day that expires after the time specified above for completion, until the Project is completed and ready for final payment.

ARTICLE 4.
CONTRACT SUM

CITY shall pay CONTRACTOR for completion of the Work in accordance with the Contract Documents in current funds in the amount of _____, as submitted by CONTRACTOR. In no event shall Contract amount exceed CONTRACTOR's bid amount of _____, unless otherwise authorized by CITY by written agreement. Said Contract Sum shall be paid in accordance with the Contract Documents.

ARTICLE 5.
INDEPENDENT CONTRACTOR

The Parties warrant by their signatures that no employer-employee relationship is established between CONTRACTOR and CITY by the terms of this Agreement. It is understood by the Parties hereto that CONTRACTOR is an independent contractor and, as such, neither CONTRACTOR

nor CONTRACTOR's employees, agents, representatives or subcontractors, if any, are employees of CITY for purposes of tax, retirement system, or social security (FICA) withholding.

ARTICLE 6.
SCOPE OF SERVICES

CONTRACTOR shall perform all work required by the Contract Documents. All work shall be completed in accordance with the specifications and plans established for this Project.

ARTICLE 7.
HOLD HARMLESS/INDEMNIFICATION

In addition to other rights granted CITY by the Contract Documents, CONTRACTOR agrees to indemnify, defend, and hold harmless CITY, its officers, agents, employees, and engineers, from and against any and all losses, lawsuits, actions, claims, judgements for damages, or any injuries or damages received or sustained by any person, persons, or property, and losses, expenses, and other costs, including litigation costs and attorney's fees, arising out of, resulting from, or in connection with the acts and/or any performances, activities, errors or omissions by CONTRACTOR, CONTRACTOR's servants, agents, officers, employees, representatives, guests, business invitees or its subcontractors; or on account of or in consequence of any neglect in safeguarding the work; or through use of unacceptable materials in constructing the work; or because of any claims or amounts recovered from any infringements of patent, trademark or copyright; or from any claims or amounts arising out of or recovered under the Workmen's Compensation Act or any other law, ordinance, order, or decree.

ARTICLE 8.
CONFLICT OF INTEREST

CONTRACTOR covenants that it presently has no interest and will not acquire any interest, direct or indirect, in the Project, which would conflict in any manner or degree with the performance of CONTRACTOR's services hereunder. CONTRACTOR further covenants that, in performing this Agreement, CONTRACTOR will employ no person who has any such interest. Should any conflict of interest arise during the performance of this Agreement, CONTRACTOR shall immediately disclose such conflict to the CITY.

ARTICLE 9.
ENTIRE AGREEMENT, MODIFICATION AND ASSIGNABILITY

This Agreement and the exhibits hereto contain the entire Agreement between the Parties, and no statements, promises, or inducements made by either Party, or agents of either Party are valid or binding unless contained herein. This Agreement may not be enlarged, modified or altered except upon written agreement signed by the Parties hereto. CONTRACTOR may not subcontract or assign its rights (including the right to compensation) or duties arising hereunder, other than as provided within the Contract Documents, without the prior written consent and express authorization of CITY.

ARTICLE 10.
LICENSES AND ADHERENCE TO LAW REQUIRED

CONTRACTOR represents that he possesses the skill and experience necessary and all licenses required to perform the services under this Agreement. CONTRACTOR further agrees to comply with all applicable Federal, State and Local statutes and regulations in the performance of the services hereunder, and are hereby made a part of this Agreement and shall be adhered to at all times. Violation of any of these statutes or regulations by CONTRACTOR shall be deemed material and shall subject CONTRACTOR to termination of this Agreement for cause. No pleas of misunderstanding or ignorance on the part of CONTRACTOR will, in any way, serve to modify the provisions of this requirement. CONTRACTOR and its surety shall indemnify, defend and hold harmless CITY and its employees, agents, engineers and representatives against any claim or liability arising from or based on the violation of any such laws, codes, ordinances, or regulations, whether by CONTRACTOR, CONTRACTOR's employees, or its subcontractors.

Anti-Boycott Against Israel Act. CONTRACTOR certifies it is not currently engaged in, and will not for the duration of the Agreement engage in, a boycott of goods and services from Israel or territories under its control. Failure to comply with I.C. 67-2346 will result in this Agreement being void as against public policy.

ARTICLE 11.
EMPLOYMENT DISCRIMINATION

It is illegal under the U.S. Federal law to discriminate against an employee, either intentionally or through disparate impact, on account of race, color, gender, religion, sex (including pregnancy), national origin, physical or mental disability, age, marital or familial status, sexual orientation, and gender expression or identity. CONTRACTOR shall not discriminate against any employee or applicant for employment. CONTRACTOR's action under this Section shall include, but not be limited to, the following: employment, upgrading, demotion or transfer, recruitment or recruitment advertising, layoff or termination, rates of pay or other forms of compensation and selection for training, including apprenticeship. CONTRACTOR agrees to post in conspicuous places, available to employees and other applicants for employment, notices setting forth the provisions of this non-discrimination Section.

ARTICLE 12.
LEGAL FEES

In the event either Party incurs legal expenses to enforce the terms and conditions of this Agreement, the prevailing Party is entitled to recover attorney's fees and other costs and expenses, whether the same are incurred with or without a lawsuit.

ARTICLE 13.
JURISDICTION, VENUE AND NONWAIVER

It is agreed that this Agreement shall be construed under and governed by the laws of the State of Idaho. In the event of litigation concerning it, it is agreed that proper venue shall be the District Court of the Second Judicial District of the State of Idaho, in and for the County of Latah. Failure

of CITY to exercise any of the rights under this Agreement, or breach thereof, shall not be deemed to be a waiver of such right or a waiver of any subsequent breach.

ARTICLE 14.
SPECIAL WARRANTY

CONTRACTOR warrants that nothing of monetary value has been given, promised or implied as remuneration or inducement to enter into this Agreement. CONTRACTOR declares that no improper personal, political or social activities have been used or attempted in an effort to influence the outcome of the competition, discussion, or negotiation leading to the award of this Agreement. Any such activity by CONTRACTOR shall make this Agreement null and void. CONTRACTOR further warrants that all materials and goods supplied under this Agreement shall be of good merchantable quality and that all services will be performed in a good workmanlike manner. CONTRACTOR acknowledges that it will be liable for any breach of this warranty.

ARTICLE 15.
COMMUNICATIONS

Such communications as are required by this Agreement shall be satisfied by mailing or by personal delivery to the Parties at the following address:

CONTRACTOR:	CITY:
Company Name	City Engineer
Authorized Agent	City of Moscow
Street Address	206 East Third Street
City, State Zip	P O Box 9203
	Moscow, Idaho 83843

ARTICLE 16.
NON-APPROPRIATIONS

This Agreement is contingent upon CITY receiving the necessary funding to cover the obligations of CITY. In the event that such funding is not received or appropriated, then, and in that event, CITY's obligations under this Agreement shall cease and each Party shall be released from further performance under this Agreement without any liability to the other Party, and CONTRACTOR shall be entitled to receive just and equitable compensation for any work satisfactorily completed hereunder.

ARTICLE 17.
APPROVAL REQUIRED AND SEVERABILITY

This Agreement shall not become effective or binding until approved by CITY. If any part of this Agreement is held unenforceable, the remaining portions of the Agreement will, nevertheless, remain in full force and effect.

ARTICLE 18.
EXECUTION

IN WITNESS WHEREOF, said CONTRACTOR and CITY have caused this Agreement to be executed on the day and year first above written.

CONTRACTOR:

_____
By:

CITY:

City of Moscow, Idaho

_____
Art Bettge, Mayor

ATTEST:

_____
Laurie M. Hopkins, City Clerk

Approved as to Form:

_____
Mia Bautista, City Attorney

ACKNOWLEDGMENT

STATE OF _____)
) ss.
COUNTY OF _____)

On this _____ day of _____, 2022, before me, a Notary Public in and for said State, appeared _____, known to me to be the person named above and acknowledged that he/she executed the foregoing document as the duly authorized representative for _____.

_____
Notary Public for the State of _____
Residing at_____
My commission expires_____

Notice to Proceed

Date: _____

Project: Sixth Street Crossing Over Paradise Creek	
Owner: City of Moscow, Idaho	Owner's Contract No.: 126-020
Contract: Sixth Street Crossing Over Paradise Creek	Engineer's Project No.: 20-21-010
Bidder:	
Bidder's Address: *[send Notice of Award Certified Mail, Return Receipt Requested]*	

You are notified that the Contract Times under the above Contract will commence to run on_____. On or before that date, you are to start performing your obligations under the Contract Documents. In accordance with Article 4 of the Agreement, the date of Substantial Completion is_____, and the date of readiness for final payment is _____ [(or) the number of days to achieve Substantial Completion is _____, and the number of days to achieve readiness for final payment is _____].

Before you may start any Work at the Site, Paragraph 2.01.B of the General Conditions provides that you and Owner must each deliver to the other (with copies to Engineer and other identified additional insureds and loss payees) certificates of insurance which each is required to purchase and maintain in accordance with the Contract Documents.

Also, before you may start any Work at the Site, you must:

_____ *[add other requirements]*.

_____ _____

Owner: City of Moscow, Idaho

Given by:

_____ _____

Authorized Signature

_____ _____

Title

_____ _____

Date

Copy to Engineer

THIS PAGE WAS INTENTIONALLY LEFT BLANK

PERFORMANCE BOND

Any singular reference to Contractor, Surety, Owner, or other party shall be considered plural where applicable.

CONTRACTOR (*Name and Address*):

SURETY (*Name, and Address of Principal Place of Business*):

OWNER (*Name and Address*):

CONTRACT
Effective Date of Agreement:
Amount (Figures):
Description (*Name and Location*):

BOND
Bond Number:
Date (*Not earlier than Effective Date of Agreement*):
Amount:
Modifications to this Bond Form:

Surety and Contractor, intending to be legally bound hereby, subject to the terms set forth below, do each cause this Performance Bond to be duly executed by an authorized officer, agent, or representative.

CONTRACTOR AS PRINCIPAL

_____ (Seal)
Contractor's Name and Corporate Seal

By: _____
Signature

_____
Print Name

_____
Title

Attest: _____
Signature

_____
Title

SURETY

_____ (Seal)
Surety's Name and Corporate Seal

By: _____
Signature (Attach Power of Attorney)

_____
Print Name

_____
Title

Attest: _____
Signature

_____
Title

Note: Provide execution by additional parties, such as joint venturers, if necessary.

Contractor and Surety, jointly and severally, bind themselves, their heirs, executors, administrators, successors, and assigns to Owner for the performance of the Contract, which is incorporated herein by reference.

1. If Contractor performs the Contract, Surety and Contractor have no obligation under this Bond, except to participate in conferences as provided in Paragraph 2.1.

2. If there is no Owner Default, Surety's obligation under this Bond shall arise after:
   - 2.1 Owner has notified Contractor and Surety, at the addresses described in Paragraph 9 below, that Owner is considering declaring a Contractor Default and has requested and attempted to arrange a conference with Contractor and Surety to be held not later than 15 days after receipt of such notice to discuss methods of performing the Contract. If Owner, Contractor, and Surety agree, Contractor shall be allowed a reasonable time to perform the Contract, but such an agreement shall not waive Owner's right, if any, subsequently to declare a Contractor Default; and
   - 2.2 Owner has declared a Contractor Default and formally terminated Contractor's right to complete the Contract. Such Contractor Default shall not be declared earlier than 20 days after Contractor and Surety have received notice as provided in Paragraph 2.1; and
   - 2.3 Owner has agreed to pay the Balance of the Contract Price to:
     1. Surety in accordance with the terms of the Contract; or
     2. Another contractor selected pursuant to Paragraph 3.3 to perform the Contract.

3. When Owner has satisfied the conditions of Paragraph 2, Surety shall promptly, and at Surety's expense, take one of the following actions:
   - 3.1 Arrange for Contractor, with consent of Owner, to perform and complete the Contract; or
   - 3.2 Undertake to perform and complete the Contract itself, through its agents or through independent contractors; or
   - 3.3 Obtain bids or negotiated proposals from qualified contractors acceptable to Owner for a contract for performance and completion of the Contract, arrange for a contract to be prepared for execution by Owner and contractor selected with Owner's concurrence, to be secured with performance and payment bonds executed by a qualified surety equivalent to the bonds issued on the Contract, and pay to Owner the amount of damages as described in Paragraph 5 in excess of the Balance of the Contract Price incurred by Owner resulting from Contractor Default; or
   - 3.4 Waive its right to perform and complete, arrange for completion, or obtain a new contractor, and with reasonable promptness under the circumstances:
     1. After investigation, determine the amount for which it may be liable to Owner and, as soon as practicable after the amount is determined, tender payment therefor to Owner; or
     2. Deny liability in whole or in part and notify Owner citing reasons therefor.

4. If Surety does not proceed as provided in Paragraph 3 with reasonable promptness, Surety shall be deemed to be in default on this Bond 15 days after receipt of an additional written notice from Owner to Surety demanding that Surety perform its obligations under this Bond, and Owner shall be entitled to enforce any remedy available to Owner. If Surety proceeds as provided in Paragraph 3.4, and Owner refuses the payment tendered or Surety has denied liability, in whole or in part, without further notice Owner shall be entitled to enforce any remedy available to Owner.

5. After Owner has terminated Contractor's right to complete the Contract, and if Surety elects to act under Paragraph 3.1, 3.2, or 3.3 above, then the responsibilities of Surety to Owner shall not be greater than those of Contractor under the Contract, and the responsibilities of Owner to Surety shall not be greater than those of Owner under the Contract. To the limit of the amount of this Bond, but subject to commitment by Owner of the Balance of the Contract Price to mitigation of costs and damages on the Contract, Surety is obligated without duplication for:

5.1 The responsibilities of Contractor for correction of defective Work and completion of the Contract;
5.2 Additional legal, design professional, and delay costs resulting from Contractor's Default, and resulting from the actions of or failure to act of Surety under Paragraph 3; and
5.3 Liquidated damages, or if no liquidated damages are specified in the Contract, actual damages caused by delayed performance or non-performance of Contractor.

6. Surety shall not be liable to Owner or others for obligations of Contractor that are unrelated to the Contract, and the Balance of the Contract Price shall not be reduced or set off on account of any such unrelated obligations. No right of action shall accrue on this Bond to any person or entity other than Owner or its heirs, executors, administrators, or successors.

7. Surety hereby waives notice of any change, including changes of time, to Contract or to related subcontracts, purchase orders, and other obligations.

8. Any proceeding, legal or equitable, under this Bond may be instituted in any court of competent jurisdiction in the location in which the Work or part of the Work is located, and shall be instituted within two years after Contractor Default or within two years after Contractor ceased working or within two years after Surety refuses or fails to perform its obligations under this Bond, whichever occurs first. If the provisions of this paragraph are void or prohibited by law, the minimum period of limitation available to sureties as a defense in the jurisdiction of the suit shall be applicable.

9. Notice to Surety, Owner, or Contractor shall be mailed or delivered to the address shown on the signature page.

10. When this Bond has been furnished to comply with a statutory requirement in the location where the Contract was to be performed, any provision in this Bond conflicting with said statutory requirement shall be deemed deleted herefrom and provisions conforming to such statutory requirement shall be deemed incorporated herein. The intent is that this Bond shall be construed as a statutory bond and not as a common law bond.

11. Definitions.
11.1 Balance of the Contract Price: The total amount payable by Owner to Contractor under the Contract after all proper adjustments have been made, including allowance to Contractor of any amounts received or to be received by Owner in settlement of insurance or other Claims for damages to which Contractor is entitled, reduced by all valid and proper payments made to or on behalf of Contractor under the Contract.
11.2 Contract: The agreement between Owner and Contractor identified on the signature page, including all Contract Documents and changes thereto.
11.3 Contractor Default: Failure of Contractor, which has neither been remedied nor waived, to perform or otherwise to comply with the terms of the Contract.
11.4 Owner Default: Failure of Owner, which has neither been remedied nor waived, to pay Contractor as required by the Contract or to perform and complete or otherwise comply with the other terms thereof.

FOR INFORMATION ONLY – (*Name, Address and Telephone*)
Surety Agency or Broker:
Owner's Representative (*Engineer or other party*):

THIS PAGE WAS INTENTIONALLY LEFT BLANK

PAYMENT BOND

Any singular reference to Contractor, Surety, Owner, or other party shall be considered plural where applicable.

CONTRACTOR (*Name and Address*):

SURETY (*Name, and Address of Principal Place of Business*):

OWNER (*Name and Address*):

CONTRACT
Effective Date of Agreement:
Amount (Figures):
Description *(Name and Location)*:

BOND
Bond Number:
Date (*Not earlier than Effective Date of Agreement*):
Amount:
Modifications to this Bond Form:

Surety and Contractor, intending to be legally bound hereby, subject to the terms set forth below, do each cause this Payment Bond to be duly executed by an authorized officer, agent, or representative.

CONTRACTOR AS PRINCIPAL

_____ (Seal)
Contractor's Name and Corporate Seal

By: _____
Signature

_____
Print Name

_____
Title

Attest: _____
Signature

_____
Title

SURETY

_____ (Seal)
Surety's Name and Corporate Seal

By: _____
Signature (Attach Power of Attorney)

_____
Print Name

_____
Title

Attest: _____
Signature

_____
Title

Note: Provide execution by additional parties, such as joint venturers, if necessary.

1. Contractor and Surety, jointly and severally, bind themselves, their heirs, executors, administrators, successors, and assigns to Owner to pay for labor, materials, and equipment furnished by Claimants for use in the performance of the Contract, which is incorporated herein by reference.

2. With respect to Owner, this obligation shall be null and void if Contractor:

Promptly makes payment, directly or indirectly, for all sums due Claimants, and

Defends, indemnifies, and holds harmless Owner from all claims, demands, liens, or suits alleging non-payment by Contractor by any person or entity who furnished labor, materials, or equipment for use in the performance of the Contract, provided Owner has promptly notified Contractor and Surety (at the addresses described in Paragraph 12) of any claims, demands, liens, or suits and tendered defense of such claims, demands, liens, or suits to Contractor and Surety, and provided there is no Owner Default.

3. With respect to Claimants, this obligation shall be null and void if Contractor promptly makes payment, directly or indirectly, for all sums due.

4. Surety shall have no obligation to Claimants under this Bond until:

Claimants who are employed by or have a direct contract with Contractor have given notice to Surety (at the address described in Paragraph 12) and sent a copy, or notice thereof, to Owner, stating that a claim is being made under this Bond and, with substantial accuracy, the amount of the claim.

Claimants who do not have a direct contract with Contractor:

1. Have furnished written notice to Contractor and sent a copy, or notice thereof, to Owner, within 90 days after having last performed labor or last furnished materials or equipment included in the claim stating, with substantial accuracy, the amount of the claim and the name of the party to whom the materials or equipment were furnished or supplied, or for whom the labor was done or performed; and
2. Have either received a rejection in whole or in part from Contractor, or not received within 30 days of furnishing the above notice any communication from Contractor by which Contractor had indicated the claim will be paid directly or indirectly; and
3. Not having been paid within the above 30 days, have sent a written notice to Surety (at the address described in Paragraph 12) and sent a copy, or notice thereof, to Owner, stating that a claim is being made under this Bond and enclosing a copy of the previous written notice furnished to Contractor.

5. If a notice by a Claimant required by Paragraph 4 is provided by Owner to Contractor or to Surety, that is sufficient compliance.

6. When a Claimant has satisfied the conditions of Paragraph 4, the Surety shall promptly and at Surety's expense take the following actions:

Send an answer to that Claimant, with a copy to Owner, within 45 days after receipt of the claim, stating the amounts that are undisputed and the basis for challenging any amounts that are disputed.

Pay or arrange for payment of any undisputed amounts.

7. Surety's total obligation shall not exceed the amount of this Bond, and the amount of this Bond shall be credited for any payments made in good faith by Surety.

8. Amounts owed by Owner to Contractor under the Contract shall be used for the performance of the Contract and to satisfy claims, if any, under any performance bond. By Contractor furnishing and Owner accepting this Bond, they agree that all funds earned by Contractor in the performance of the Contract are dedicated to satisfy obligations of Contractor and Surety under this Bond, subject to Owner's priority to use the funds for the completion of the Work.

9. Surety shall not be liable to Owner, Claimants, or others for obligations of Contractor that are unrelated to the Contract. Owner shall not be liable for payment of any costs or expenses of any Claimant under this Bond, and shall have under this Bond no obligations to make payments to, give notices on behalf of, or otherwise have obligations to Claimants under this Bond.

10. Surety hereby waives notice of any change, including changes of time, to the Contract or to related subcontracts, purchase orders, and other obligations.

11. No suit or action shall be commenced by a Claimant under this Bond other than in a court of competent jurisdiction in the location in which the Work or part of the Work is located or after the expiration of one year from the date (1) on which the Claimant gave the notice required by Paragraph 4.1 or Paragraph 4.2.3, or (2) on which the last labor or service was performed by anyone or the last materials or equipment were furnished by anyone under the Contract, whichever of (1) or (2) first occurs. If the provisions of this paragraph are void or prohibited by law, the minimum period of limitation available to sureties as a defense in the jurisdiction of the suit shall be applicable.

12. Notice to Surety, Owner, or Contractor shall be mailed or delivered to the addresses shown on the signature page. Actual receipt of notice by Surety, Owner, or Contractor, however accomplished, shall be sufficient compliance as of the date received at the address shown on the signature page.

13. When this Bond has been furnished to comply with a statutory requirement in the location where the Contract was to be performed, any provision in this Bond conflicting with said statutory requirement shall be deemed deleted herefrom and provisions conforming to such statutory requirement shall be deemed incorporated herein. The intent is that this Bond shall be construed as a statutory Bond and not as a common law bond.

14. Upon request of any person or entity appearing to be a potential beneficiary of this Bond, Contractor shall promptly furnish a copy of this Bond or shall permit a copy to be made.

15. Definitions

Claimant: An individual or entity having a direct contract with Contractor, or with a first-tier subcontractor of Contractor, to furnish labor, materials, or equipment for use in the performance of the Contract. The intent of this Bond shall be to include without limitation in the terms "labor, materials or equipment" that part of water, gas, power, light, heat, oil, gasoline, telephone service, or rental equipment used in the Contract, architectural and engineering services required for performance of the Work of Contractor and Contractor's subcontractors, and all other items for which a mechanic's lien may be asserted in the jurisdiction where the labor, materials, or equipment were furnished.

Contract: The agreement between Owner and Contractor identified on the signature page, including all Contract Documents and changes thereto.

Owner Default: Failure of Owner, which has neither been remedied nor waived, to pay Contractor as required by the Contract, or to perform and complete or otherwise comply with the other terms thereof.

FOR INFORMATION ONLY – (*Name, Address, and Telephone*) Surety Agency or Broker: Owner's Representative (*Engineer or other*):

THIS PAGE WAS INTENTIONALLY LEFT BLANK

Form WH-5
Public Works Contract Report

Contractors awarded Idaho public works contracts must submit this form to the Tax Commission within 30 days of receiving the award. (Idaho Code sections 54-1904A and 63-3624(g)).

Contract awarded by (public body and address)

Contract awarded to (contractor's name and address)

State of incorporation	Federal Employer Identification Number (EIN)	Date qualified to do business in Idaho
Business operates as ☐ Sole Proprietorship ☐ Partnership ☐ Corporation ☐ LLC		Public works contractor license number
Sole proprietor's Social Security number	Idaho sellers permit number	Idaho withholding tax permit number
Awarding agency project number		Amount of contract $

Description and location of work to be performed

Project Dates

Scheduled project start date: _____ Completion date: _____

If the following information isn't available at this time, please enter date it will be: _____

All Subcontractors

Name			Federal EIN
Address			Public works contractor license number
City	State	ZIP Code	Amount of subcontract $
Description of work			

Name			Federal EIN
Address			Public works contractor license number
City	State	ZIP Code	Amount of subcontract $
Description of work			

Name			Federal EIN
Address			Public works contractor number
City	State	ZIP Code	Amount of subcontract $
Description of work			

Name			Federal EIN
Address			Public works contractor license number
City	State	ZIP Code	Amount of subcontract $
Description of work			

All Subcontractors (*continued*)

Name			Federal EIN
Address			Public works contractor license number
City	State	ZIP Code	Amount of subcontract $
Description of work			

Name			Federal EIN
Address			Public works contractor license number
City	State	ZIP Code	Amount of subcontract $
Description of work			

Name			Federal EIN
Address			Public works contractor license number
City	State	ZIP Code	Amount of subcontract $
Description of work			

Suppliers

List your major suppliers of materials, equipment, and supplies. Include items removed from inventory and items provided to you by the government agency for use in this project.

Name		Federal EIN	Total value $
Address		Materials and equipment purchased and used	
City, State, ZIP Code	Phone number	Please select how sales or use tax was paid. ☐ Tax paid to supplier ☐ Tax paid to state* ☐ No tax was paid	

Name		Federal EIN	Total value $
Address		Materials and equipment purchased and used	
City, State, ZIP Code	Phone number	Please select how sales or use tax was paid. ☐ Tax paid to supplier ☐ Tax paid to state* ☐ No tax was paid	

Name		Federal EIN	Total value $
Address		Materials and equipment purchased and used	
City, State, ZIP Code	Phone number	Please select how sales or use tax was paid. ☐ Tax paid to supplier ☐ Tax paid to state* ☐ No tax was paid	

*If you're reporting any untaxed materials, equipment, or supplies as "items subject to use tax" on your Idaho return, provide the period when you did or will report it: _____

If you paid tax to a state other than Idaho, write the name state next to "total value" boxes, above. For any tax due that you haven't reported yet, include payment with this form. You can make copies of this form is you need more room.

Sign Here	Authorized signature	Print name	Phone number	Date

File with the Idaho State Tax Commission, PO Box 36, Boise ID 83722-0410
For more information, call (208) 334-7618 | Fax: (208) 332-6619 | Email: **contractdesk@tax.idaho.gov**

Contractor's Application for Payment No. _____

	Application Period:	Application Date:
To (Owner):	From (Contractor):	Via (Engineer):
Project:	Contract:	
Owner's Contract No.:	Contractor's Project No.:	Engineer's Project No.:

Application For Payment

Change Order Summary

Approved Change Orders		
Number	Additions	Deductions
TOTALS		
NET CHANGE BY CHANGE ORDERS		

1. ORIGINAL CONTRACT PRICE..... $ _____

2. Net change by Change Orders..... $ _____

3. Current Contract Price (Line 1 ± 2)..... $ _____

4. TOTAL COMPLETED AND STORED TO DATE
(Column F on Progress Estimate)..... $ _____

5. RETAINAGE:

a. X _____ Work Completed..... $ _____

b. X _____ Stored Material..... $ _____

c. Total Retainage (Line 5a + Line 5b)..... $ _____

6. AMOUNT ELIGIBLE TO DATE (Line 4 - Line 5c)..... $ _____

7. LESS PREVIOUS PAYMENTS (Line 6 from prior Application)..... $ _____

8. AMOUNT DUE THIS APPLICATION..... $ _____

9. BALANCE TO FINISH, PLUS RETAINAGE
(Column G on Progress Estimate + Line 5 above)..... $ _____

Contractor's Certification

The undersigned Contractor certifies that to the best of its knowledge: (1) all previous progress payments received from Owner on account of Work done under the Contract have been applied on account to discharge Contractor's legitimate obligations incurred in connection with Work covered by prior Applications for Payment; (2) title of all Work, materials and equipment incorporated in said Work or otherwise listed in or covered by this Application for Payment will pass to Owner at time of payment free and clear of all Liens, security interests and encumbrances (except such as are covered by a Bond acceptable to Owner indemnifying Owner against any such Liens, security interest or encumbrances); and (3) all Work covered by this Application for Payment is in accordance with the Contract Documents and is not defective.

By:	Date:

Payment of: $ _____
(Line 8 or other - attach explanation of the other amount)

is recommended by: _____ _____
(Engineer) (Date)

Payment of: $ _____
(Line 8 or other - attach explanation of the other amount)

is approved by: _____ _____
(Owner) (Date)

Approved by: _____ _____
Funding Agency (if applicable) (Date)

Progress Estimate

Contractor's Application For Payment No. _____

For (contract):	Application Number:
Application Period:	Application Date:

A		B	Work Completed		E	F		G
Item		Scheduled Value	C	D	Materials Presently Stored (not in C or D)	Total Completed and Stored to Date (C + D + E)	% (F) B	Balance to Finish (B - F)
Specification Section No.	Description		From Previous Application (C+D)	This Period				
	Totals							

EJCDC
ENGINEERS JOINT CONTRACT DOCUMENTS COMMITTEE

CERTIFICATE OF SUBSTANTIAL COMPLETION

Owner:	City of Moscow, Idaho	Owner's Contract No.:	126-020
Contractor:		Contractor's Project No.:	
Engineer:	J-U-B ENGINEERS, Inc.	Engineer's Project No.:	20-21-010
Project:	Sixth Street Crossing Over Paradise Creek	Contract Name:	Sixth Street Crossing Over Paradise Creek

This [preliminary] [final] Certificate of Substantial Completion applies to:

☐ All Work ☐ The following specified portions of the Work:

_____

Date of Substantial Completion

The Work to which this Certificate applies has been inspected by authorized representatives of Owner, Contractor, and Engineer, and found to be substantially complete. The Date of Substantial Completion of the Work or portion thereof designated above is hereby established, subject to the provisions of the Contract pertaining to Substantial Completion. The date of Substantial Completion in the final Certificate of Substantial Completion marks the commencement of the contractual correction period and applicable warranties required by the Contract.

A punch list of items to be completed or corrected is attached to this Certificate. This list may not be all-inclusive, and the failure to include any items on such list does not alter the responsibility of the Contractor to complete all Work in accordance with the Contract. The Owner, Contractor, and Engineer have agreed that the 72-hour startup test can occur from April 28 through May 1, and that the generator can be tested after the date of substantial completion.

The responsibilities between Owner and Contractor for security, operation, safety, maintenance, heat, utilities, insurance, and warranties upon Owner's use or occupancy of the Work shall be as provided in the Contract, except as amended as follows:

Amendments to Owner's responsibilities: ☐ None
☐ As follows:

Amendments to Contractor's responsibilities: ☐ None
☐ As follows:

The following documents are attached to and made a part of this Certificate:

This Certificate does not constitute an acceptance of Work not in accordance with the Contract Documents, nor is it a release of Contractor's obligation to complete the Work in accordance with the Contract.

EXECUTED BY ENGINEER:	RECEIVED:	RECEIVED:
By: _____	By: _____	By: _____
(Authorized signature)	Owner (Authorized Signature)	Contractor (Authorized Signature)
Title: _____	Title: _____	Title: _____
Date: _____	Date: _____	Date: _____

Work Change Directive

No. _____

Date of Issuance: _____ Effective Date: _____

Project: Sixth Street Crossing Over Paradise Creek	Owner: City of Moscow, Idaho	Owner's Contract No.: 126-020
Contract: Sixth Street Crossing Over Paradise Creek		Date of Contract:
Contractor:		Engineer's Project No.: 20-21-010

Contractor is directed to proceed promptly with the following change(s):

Item No.	Description

Attachments (list documents supporting change):

_____

_____

Purpose for Work Change Directive:

Authorization for Work described herein to proceed on the basis of Cost of the Work due to:

- ☐ Nonagreement on pricing of proposed change.
- ☐ Necessity to expedite Work described herein prior to agreeing to changes on Contract Price and Contract Time.

Estimated change in Contract Price and Contract Times:

Contract Price $_____ (increase/decrease) Contract Time _____ (increase/decrease) days

If the change involves an increase, the estimated amount is not to be exceeded without further authorization

Recommended for Approval by Engineer:	Date
Authorized for Owner by:	Date
Received for Contractor by:	Date
Received by Funding Agency (if applicable):	Date:

THIS PAGE WAS INTENTIONALLY LEFT BLANK

Change Order

No. _____

Date of Issuance: _____ Effective Date: _____

Project: Sixth Street Crossing Over Paradise Creek	Owner: City of Moscow, Idaho	Owner's Contract No.: 126-020
Contract: Sixth Street Crossing Over Paradise Creek		Date of Contract:
Contractor:		Engineer's Project No.: 20-21-010

The Contract Documents are modified as follows upon execution of this Change Order:

Description:

Attachments (list documents supporting change):

CHANGE IN CONTRACT PRICE:	CHANGE IN CONTRACT TIMES:
Original Contract Price: $_____	Original Contract Times: ☐ Working days ☐ Calendar days Substantial completion (days or date): _____ Ready for final payment (days or date): _____
[Increase] [Decrease] from previously approved Change Orders No. _____ to No. _____: $_____	[Increase] [Decrease] from previously approved Change Orders No. _____ to No. _____: Substantial completion (days): _____ Ready for final payment (days): _____
Contract Price prior to this Change Order: $_____	Contract Times prior to this Change Order: Substantial completion (days or date): _____ Ready for final payment (days or date): _____
[Increase] [Decrease] of this Change Order: $_____	[Increase] [Decrease] of this Change Order: Substantial completion (days or date): _____ Ready for final payment (days or date): _____
Contract Price incorporating this Change Order: $_____	Contract Times with all approved Change Orders: Substantial completion (days or date): _____ Ready for final payment (days or date): _____

RECOMMENDED:	ACCEPTED:	ACCEPTED:
By: _____ Engineer (Authorized Signature)	By: _____ Owner (Authorized Signature)	By: _____ Contractor (Authorized Signature)
Name: _____ Print Name	Name: _____ Print Name	Name: _____ Print Name
Date: _____	Date: _____	Date: _____

Approved by Funding Agency (if applicable): Date: _____

Change Order

Instructions

A. GENERAL INFORMATION

This document was developed to provide a uniform format for handling contract changes that affect Contract Price or Contract Times. Changes that have been initiated by a Work Change Directive must be incorporated into a subsequent Change Order if they affect Price or Times.

Changes that affect Contract Price or Contract Times should be promptly covered by a Change Order. The practice of accumulating Change Orders to reduce the administrative burden may lead to unnecessary disputes.

If Milestones have been listed in the Agreement, any effect of a Change Order thereon should be addressed.

For supplemental instructions and minor changes not involving a change in the Contract Price or Contract Times, a Field Order should be used.

B. COMPLETING THE CHANGE ORDER FORM

Engineer normally initiates the form, including a description of the changes involved and attachments based upon documents and proposals submitted by Contractor, or requests from Owner, or both.

Once Engineer has completed and signed the form, all copies should be sent to Owner or Contractor for approval, depending on whether the Change Order is a true order to the Contractor or the formalization of a negotiated agreement for a previously performed change. After approval by one contracting party, all copies should be sent to the other party for approval. Engineer should make distribution of executed copies after approval by both parties.

If a change only applies to price or to times, cross out the part of the tabulation that does not apply.

Field Order

No. _____

Date of Issuance: _____ Effective Date: _____

Project:	Owner:	Owner's Contract No.:
Sixth Street Crossing Over Paradise Creek	City of Moscow, Idaho	126-020
Contract: Sixth Street Crossing Over Paradise Creek		Date of Contract:
Contractor:		Engineer's Project No.: 20-21-010

Attention:
You are hereby directed to promptly execute this Field Order issued in accordance with General Conditions Paragraph 9.04.A, for minor changes in the Work without changes in Contract Price or Contract Times. If you consider that a change in Contract Price or Contract Times is required, please notify the Engineer immediately and before proceeding with this Work.

Reference: _____ _____
(Specification Section(s)) (Drawing(s) / Detail(s))

Description:

Attachments:

Engineer:
Signature: _____
Print Name: _____

Receipt Acknowledged by Contractor:
Signature: _____
Print Name: _____

Date:

Copy to Owner

THIS PAGE WAS INTENTIONALLY LEFT BLANK

City of Moscow
Latah County, Idaho
Sixth Street Crossing Over Paradise Creek

Section 2

General Conditions

THIS PAGE WAS INTENTIONALLY LEFT BLANK

This document has important legal consequences; consultation with an attorney is encouraged with respect to its use or modification. This document should be adapted to the particular circumstances of the contemplated Project and the controlling Laws and Regulations.

ISPWC DIVISION 100 – STANDARD GENERAL CONDITIONS OF THE CONSTRUCTION CONTRACT

Modified From

ENGINEERS JOINT CONTRACT DOCUMENTS COMMITTEE

2015 IDAHO STANDARDS FOR PUBLIC WORKS CONSTRUCTION (ISPWC)

NOTE: The base document is the 2007 EJCDC version. Items added to EJCDC to form the 2015 ISPWC are underlined. Items deleted from the EJCDC to form the 2015 ISPWC are shown in strikeout format.

This document has important legal consequences; consultation with an attorney is encouraged with respect to its use or modification. This document should be adapted to the particular circumstances of the contemplated Project and the controlling Laws and Regulations.

STANDARD GENERAL CONDITIONS OF THE CONSTRUCTION CONTRACT

Prepared by

ENGINEERS JOINT CONTRACT DOCUMENTS COMMITTEE

and

Issued and Published Jointly by

AMERICAN COUNCIL OF ENGINEERING COMPANIES

ASSOCIATED GENERAL CONTRACTORS OF AMERICA

AMERICAN SOCIETY OF CIVIL ENGINEERS

PROFESSIONAL ENGINEERS IN PRIVATE PRACTICE
A Practice Division of the
NATIONAL SOCIETY OF PROFESSIONAL ENGINEERS

Endorsed by

CONSTRUCTION SPECIFICATIONS INSTITUTE

These General Conditions have been prepared for use with the Suggested Forms of Agreement Between Owner and Contractor (EJCDC C-520 or C-525, 2007 Editions). Their provisions are interrelated and a change in one may necessitate a change in the other. Comments concerning their usage are contained in the Narrative Guide to the EJCDC Construction Documents (EJCDC C-001, 2007 Edition). For guidance in the preparation of Supplementary Conditions, see Guide to the Preparation of Supplementary Conditions (EJCDC C-800, 2007 Edition).

Copyright © 2007 National Society of Professional Engineers
1420 King Street, Alexandria, VA 22314-2794
(703) 684-2882
www.nspe.org

American Council of Engineering Companies
1015 15th Street N.W., Washington, DC 20005
(202) 347-7474
www.acec.org

American Society of Civil Engineers
1801 Alexander Bell Drive, Reston, VA 20191-4400
(800) 548-2723
www.asce.org

Associated General Contractors of America
2300 Wilson Boulevard, Suite 400, Arlington, VA 22201-3308
(703) 548-3118
www.agc.org

The copyright for this EJCDC document is owned jointly by the four
EJCDC sponsoring organizations and held in trust for their benefit by NSPE.

STANDARD GENERAL CONDITIONS OF THE CONSTRUCTION CONTRACT

TABLE OF CONTENTS

Page

Article 1 – Definitions and Terminology 1
1.01 Defined Terms 1
1.02 Terminology 4

Article 2 – Preliminary Matters 5
2.01 Delivery of Bonds and Evidence of Insurance 5
2.02 Copies of Documents 5
2.03 Commencement of Contract Times; Notice to Proceed 5
2.04 Starting the Work 5
2.05 Before Starting Construction 6
2.06 Preconstruction Conference; Designation of Authorized Representatives 6
2.07 Initial Acceptance of Schedules 6

Article 3 – Contract Documents: Intent, Amending, Reuse 6
3.01 Intent 6
3.02 Reference Standards 7
3.03 Reporting and Resolving Discrepancies 7
3.04 Amending and Supplementing Contract Documents 8
3.05 Reuse of Documents 8
3.06 Electronic Data 8

Article 4 – Availability of Lands; Subsurface and Physical Conditions; Hazardous Environmental Conditions; Reference Points 8
4.01 Availability of Lands 8
4.02 Subsurface and Physical Conditions 9
4.03 Differing Subsurface or Physical Conditions 9
4.04 Underground Facilities 10
4.05 Reference Points 11
4.06 Hazardous Environmental Condition at Site 11

Article 5 – Bonds and Insurance 13
5.01 Performance, Payment, and Other Bonds 13
5.02 Licensed Sureties and Insurers 13
5.03 Certificates of Insurance 13
5.04 Contractor's Insurance 14
5.05 Owner's Liability Insurance 15
5.06 Property Insurance 15
5.07 Waiver of Rights 17
5.08 Receipt and Application of Insurance Proceeds 17
5.09 Acceptance of Bonds and Insurance; Option to Replace 17
5.10 Partial Utilization, Acknowledgment of Property Insurer 18

Article 6 – Contractor's Responsibilities 18
6.01 Supervision and Superintendence 18
6.02 Labor; Working Hours 18
6.03 Services, Materials, and Equipment 18
6.04 Progress Schedule 19
6.05 Substitutes and "Or-Equals" 19

6.06 Concerning Subcontractors, Suppliers, and Others 21
6.07 Patent Fees and Royalties 22
6.08 Permits 22
6.09 Laws and Regulations 22
6.10 Taxes 24
6.11 Use of Site and Other Areas 24
6.12 Record Documents 25
6.13 Safety and Protection 25
6.14 Safety Representative 26
6.15 Hazard Communication Programs 26
6.16 Emergencies 26
6.17 Shop Drawings and Samples 26
6.18 Continuing the Work 27
6.19 Contractor's General Warranty and Guarantee 28
6.20 Indemnification 28
6.21 Delegation of Professional Design Services 29
6.22 Quality Control 29

Article 7 – Other Work at the Site 29
7.01 Related Work at Site 29
7.02 Coordination 30
7.03 Legal Relationships 30

Article 8 – Owner's Responsibilities 30
8.01 Communications to Contractor 30
8.02 Replacement of Engineer 30
8.03 Furnish Data 31
8.04 Pay When Due 31
8.05 Lands and Easements; Reports and Tests 31
8.06 Insurance 31
8.07 Change Orders 31
8.08 Inspections, Tests, and Approvals 31
8.09 Limitations on Owner's Responsibilities 31
8.10 Undisclosed Hazardous Environmental Condition 31
8.11 Evidence of Financial Arrangements 31
8.12 Compliance with Safety Program 31

Article 9 – Engineer's Status During Construction 32
9.01 Owner's Representative 32
9.02 Visits to Site 32
9.03 Project Representative 32
9.04 Authorized Variations in Work 32
9.05 Rejecting Defective Work 32
9.06 Shop Drawings, Change Orders and Payments 33
9.07 Determinations for Unit Price Work 33
9.08 Decisions on Requirements of Contract Documents and Acceptability of Work 33
9.09 Limitations on Engineer's Authority and Responsibilities 33
9.10 Compliance with Safety Program 34

Article 10 – Changes in the Work; Claims 34
10.01 Authorized Changes in the Work 34
10.02 Unauthorized Changes in the Work 34
10.03 Execution of Change Orders 34
10.04 Notification to Surety 35
10.05 Claims 35

Article 11 – Cost of the Work; Allowances; Unit Price Work 35
11.01 Cost of the Work 35
11.02 Allowances 37
11.03 Unit Price Work 38

Article 12 – Change of Contract Price; Change of Contract Times 38
12.01 Change of Contract Price 38
12.02 Change of Contract Times 39
12.03 Delays 39

Article 13 – TESTS AND INSPECTIONS; CORRECTION, REMOVAL OR ACCEPTANCE OF DEFECTIVE WORK 40
13.01 Notice of Defects 40
13.02 Access to Work 40
13.03 Tests and Inspections 40
13.04 Uncovering Work 41
13.05 Owner May Stop the Work 41
13.06 Correction or Removal of Defective Work 41
13.07 Correction Period 42
13.08 Acceptance of Defective Work 42
13.09 Owner May Correct Defective Work 43

Article 14 – Payments to Contractor and Completion 43
14.01 Schedule of Values 43
14.02 Progress Payments 43
14.03 Contractor's Warranty of Title 45
14.04 Substantial Completion 45
14.05 Partial Utilization 46
14.06 Final Inspection 46
14.07 Final Payment 47
14.08 Final Completion Delayed 48
14.09 Waiver of Claims 48

Article 15 – Suspension of Work and Termination 48
15.01 Owner May Suspend Work 48
15.02 Owner May Terminate for Cause 48
15.03 Owner May Terminate For Convenience 49
15.04 Contractor May Stop Work or Terminate 50

Article 16 – Dispute Resolution 50
16.01 Methods and Procedures 50

Article 17 – Miscellaneous 50
17.01 Giving Notice 50
17.02 Computation of Times 51
17.03 Cumulative Remedies 51
17.04 Survival of Obligations 51
17.05 Controlling Law 51
17.06 Headings 51

ARTICLE 1 – DEFINITIONS AND TERMINOLOGY

1.01 *Defined Terms*

A. Wherever used in the Bidding Requirements or Contract Documents and printed with initial capital letters, the terms listed below will have the meanings indicated which are applicable to both the singular and plural thereof. In addition to terms specifically defined, terms with initial capital letters in the Contract Documents include references to identified articles and paragraphs, and the titles of other documents or forms.

1. *Addenda*—Written or graphic instruments issued prior to the opening of Bids which clarify, correct, or change the Bidding Requirements or the proposed Contract Documents.

2. *Agreement*—The written instrument which is evidence of the agreement between Owner and Contractor covering the Work.

3. *Application for Payment*—The form acceptable to Engineer which is to be used by Contractor during the course of the Work in requesting progress or final payments and which is to be accompanied by such supporting documentation as is required by the Contract Documents.

4. *Asbestos*—Any material that contains more than one percent asbestos and is friable or is releasing asbestos fibers into the air above current action levels established by the United States Occupational Safety and Health Administration.

5. *Bid*—The offer or proposal of a Bidder submitted on the prescribed form setting forth the prices for the Work to be performed.

6. *Bidder*—The individual or entity who submits a Bid directly to Owner.

7. *Bidding Documents*—The Bidding Requirements and the proposed Contract Documents (including all Addenda).

8. *Bidding Requirements*—The advertisement or invitation to bid, Instructions to Bidders, Bid security of acceptable form, if any, and the Bid Form with any supplements.

9. *Change Order*—A document recommended by Engineer which is signed by Contractor and Owner and authorizes an addition, deletion, or revision in the Work or an adjustment in the Contract Price or the Contract Times, issued on or after the Effective Date of the Agreement.

10. *Claim*—A demand or assertion by Owner or Contractor seeking an adjustment of Contract Price or Contract Times, or both, or other relief with respect to the terms of the Contract. A demand for money or services by a third party is not a Claim.

11. *Contract*—The entire and integrated written agreement between the Owner and Contractor concerning the Work. The Contract supersedes prior negotiations, representations, or agreements, whether written or oral.

12. *Contract Documents*—Those items so designated in the Agreement. Only printed or hard copies of the items listed in the Agreement are Contract Documents. Approved Shop Drawings, other Contractor submittals, and the reports and drawings of subsurface and physical conditions are not Contract Documents.

13. *Contract Price*—The moneys payable by Owner to Contractor for completion of the Work in accordance with the Contract Documents as stated in the Agreement (subject to the provisions of Paragraph 11.03 in the case of Unit Price Work).

14. *Contract Times*—The number of days or the dates stated in the Agreement to: (i) achieve Milestones, if any; (ii) achieve Substantial Completion; and (iii) complete the Work so that it is ready for final payment as evidenced by Engineer's written recommendation of final payment.

15. *Contractor*—The individual or entity with whom Owner has entered into the Agreement.

16. *Cost of the Work*—See Paragraph 11.01 for definition.

17. *Drawings*—That part of the Contract Documents prepared or approved by Engineer which graphically shows the scope, extent, and character of the Work to be performed by Contractor. Shop Drawings and other Contractor submittals are not Drawings as so defined.

18. *Effective Date of the Agreement*—The date indicated in the Agreement on which it becomes effective, but if no such date is indicated, it means the date on which the Agreement is signed and delivered by the last of the two parties to sign and deliver.

19. *Engineer*—The individual or entity named as such in the Agreement.

20. *Field Order*—A written order issued by Engineer which requires minor changes in the Work but which does not involve a change in the Contract Price or the Contract Times.

21. *General Requirements*—Sections of Division 1 of the Specifications.

22. *Hazardous Environmental Condition*—The presence at the Site of Asbestos, PCBs, Petroleum, Hazardous Waste, or Radioactive Material in such quantities or circumstances that may present a substantial danger to persons or property exposed thereto.

23. *Hazardous Waste*—The term Hazardous Waste shall have the meaning provided in Section 1004 of the Solid Waste Disposal Act (42 USC Section 6903) as amended from time to time.

24. *Laws and Regulations; Laws or Regulations*—Any and all applicable laws, rules, regulations, ordinances, codes, and orders of any and all governmental bodies, agencies, authorities, and courts having jurisdiction.

25. *Liens*—Charges, security interests, or encumbrances upon Project funds, real property, or personal property.

26. *Milestone*—A principal event specified in the Contract Documents relating to an intermediate completion date or time prior to Substantial Completion of all the Work.

27. *Notice of Award*—The written notice by Owner to the Successful Bidder stating that upon timely compliance by the Successful Bidder with the conditions precedent listed therein, Owner will sign and deliver the Agreement.

28. *Notice to Proceed*—A written notice given by Owner to Contractor fixing the date on which the Contract Times will commence to run and on which Contractor shall start to perform the Work under the Contract Documents.

29. *Owner*—The individual or entity with whom Contractor has entered into the Agreement and for whom the Work is to be performed.

30. *PCBs*—Polychlorinated biphenyls.

31. *Petroleum*—Petroleum, including crude oil or any fraction thereof which is liquid at standard conditions of temperature and pressure (60 degrees Fahrenheit and 14.7 pounds per square inch absolute), such as oil, petroleum, fuel oil, oil sludge, oil refuse, gasoline, kerosene, and oil mixed with other non-Hazardous Waste and crude oils.

32. *Progress Schedule*—A schedule, prepared and maintained by Contractor, describing the sequence and duration of the activities comprising the Contractor's plan to accomplish the Work within the Contract Times.

33. *Project*—The total construction of which the Work to be performed under the Contract Documents may be the whole, or a part.

34. *Project Manual*—The bound documentary information prepared for bidding and constructing the Work. A listing of the contents of the Project Manual, which may be bound in one or more volumes, is contained in the table(s) of contents.

35. *Radioactive Material*—Source, special nuclear, or byproduct material as defined by the Atomic Energy Act of 1954 (42 USC Section 2011 et seq.) as amended from time to time.

36. *Resident Project Representative*—The authorized representative of Engineer who may be assigned to the Site or any part thereof.

37. *Samples*—Physical examples of materials, equipment, or workmanship that are representative of some portion of the Work and which establish the standards by which such portion of the Work will be judged.

38. *Schedule of Submittals*—A schedule, prepared and maintained by Contractor, of required submittals and the time requirements to support scheduled performance of related construction activities.

39. *Schedule of Values*—A schedule, prepared and maintained by Contractor, allocating portions of the Contract Price to various portions of the Work and used as the basis for reviewing Contractor's Applications for Payment.

40. *Shop Drawings*—All drawings, diagrams, illustrations, schedules, and other data or information which are specifically prepared or assembled by or for Contractor and submitted by Contractor to illustrate some portion of the Work.

41. *Site*—Lands or areas indicated in the Contract Documents as being furnished by Owner upon which the Work is to be performed, including rights-of-way and easements for access thereto, and such other lands furnished by Owner which are designated for the use of Contractor.

42.a.*Specifications*—That part of the Contract Documents consisting of written requirements for materials, equipment, systems, standards and workmanship as applied to the Work, and certain administrative requirements and procedural matters applicable thereto.

42.b.*Standard Specifications*–Wherever in these Contract Documents reference is made to the Standard Specifications, said reference shall be understood as referring to the Idaho Standards for Public Works Construction which applicable parts are incorporated herein and made a part of these Documents by specific reference thereto. If requirements contained in the Standard Specifications are modified by or are in conflict with supplemental information in these Contract Documents, the requirements of these Contract Documents shall prevail.

43. *Subcontractor*—An individual or entity having a direct contract with Contractor or with any other Subcontractor for the performance of a part of the Work at the Site.

44. *Substantial Completion*—The time at which the Work (or a specified part thereof) has progressed to the point where, in the opinion of Engineer, the Work (or a specified part thereof) is sufficiently complete, in accordance with the Contract Documents, so that the Work (or a specified part thereof) can be utilized for the purposes for which it is intended. The terms "substantially complete" and "substantially completed" as applied to all or part of the Work refer to Substantial Completion thereof.

45. *Successful Bidder*—The Bidder submitting a responsive Bid to whom Owner makes an award.

46. *Supplementary Conditions*—That part of the Contract Documents which amends or supplements these General Conditions.

47. *Supplier*—A manufacturer, fabricator, supplier, distributor, materialman, or vendor having a direct contract with Contractor or with any Subcontractor to furnish materials or equipment to be incorporated in the Work by Contractor or Subcontractor.

48. *Underground Facilities*—All underground pipelines, conduits, ducts, cables, wires, manholes, vaults, tanks, tunnels, or other such facilities or attachments, and any encasements containing such facilities, including those that convey electricity, gases, steam, liquid petroleum products, telephone or other communications, cable television, water, wastewater, storm water, other liquids or chemicals, or traffic or other control systems.

49. *Unit Price Work*—Work to be paid for on the basis of unit prices.

50. *Work*—The entire construction or the various separately identifiable parts thereof required to be provided under the Contract Documents. Work includes and is the result of performing or providing all labor, services, and documentation necessary to produce such construction, and furnishing, installing, and incorporating all materials and equipment into such construction, all as required by the Contract Documents.

51. *Work Change Directive*—A written statement to Contractor issued on or after the Effective Date of the Agreement and signed by Owner and recommended by Engineer ordering an addition, deletion, or revision in the Work, or responding to differing or unforeseen subsurface or physical conditions under which the Work is to be performed or to emergencies. A Work Change Directive will not change the Contract Price or the Contract Times but is evidence that the parties expect that the change ordered or documented by a Work Change Directive will be incorporated in a subsequently issued Change Order following negotiations by the parties as to its effect, if any, on the Contract Price or Contract Times.

1.02 *Terminology*

A. The words and terms discussed in Paragraph 1.02.B through F are not defined but, when used in the Bidding Requirements or Contract Documents, have the indicated meaning.

B. *Intent of Certain Terms or Adjectives:*

1. The Contract Documents include the terms "as allowed," "as approved," "as ordered," "as directed" or terms of like effect or import to authorize an exercise of professional judgment by Engineer. In addition, the adjectives "reasonable," "suitable," "acceptable," "proper," "satisfactory," or adjectives of like effect or import are used to describe an action or determination of Engineer as to the Work. It is intended that such exercise of professional judgment, action, or determination will be solely to evaluate, in general, the Work for compliance with the information in the Contract Documents and with the design concept of the Project as a functioning whole as shown or indicated in the Contract Documents (unless there is a specific statement indicating otherwise). The use of any such term or adjective is not intended to and shall not be effective to assign to Engineer any duty or authority to supervise or direct the performance of the Work, or any duty or authority to undertake responsibility contrary to the provisions of Paragraph 9.09 or any other provision of the Contract Documents.

2. "Command" type language is used in the Contract Documents. This command language refers to, and is directed to the Contractor.

C. *Day:*

1. The word "day" means a calendar day of 24 hours measured from midnight to the next midnight.

D. *Defective:*

1. The word "defective," when modifying the word "Work," refers to Work that is unsatisfactory, faulty, or deficient in that it:

a. does not conform to the Contract Documents; or

b. does not meet the requirements of any applicable inspection, reference standard, test, or approval referred to in the Contract Documents; or

c. has been damaged prior to Engineer's recommendation of final payment (unless responsibility for the protection thereof has been assumed by Owner at Substantial Completion in accordance with Paragraph 14.04 or 14.05).

E. *Furnish, Install, Perform, Provide:*

1. The word "furnish," when used in connection with services, materials, or equipment, shall mean to supply and deliver said services, materials, or equipment to the Site (or some other specified location) ready for use or installation and in usable or operable condition.

2. The word "install," when used in connection with services, materials, or equipment, shall mean to put into use or place in final position said services, materials, or equipment complete and ready for intended use.

3. The words "perform" or "provide," when used in connection with services, materials, or equipment, shall mean to furnish and install said services, materials, or equipment complete and ready for intended use.

4. When "furnish," "install," "perform," or "provide" is not used in connection with services, materials, or equipment in a context clearly requiring an obligation of Contractor, "provide" is implied.

F. Unless stated otherwise in the Contract Documents, words or phrases that have a well-known technical or construction industry or trade meaning are used in the Contract Documents in accordance with such recognized meaning.

ARTICLE 2 – PRELIMINARY MATTERS

2.01 *Delivery of Bonds and Evidence of Insurance*

A. When Contractor delivers the executed counterparts of the Agreement to Owner, Contractor shall also deliver to Owner such bonds as Contractor may be required to furnish.

B. *Evidence of Insurance:* Before any Work at the Site is started, Contractor and Owner shall each deliver to the other, with copies to each additional insured identified in the Supplementary Conditions, certificates of insurance (and other evidence of insurance which either of them or any additional insured may reasonably request) which Contractor and Owner respectively are required to purchase and maintain in accordance with Article 5.

2.02 *Copies of Documents*

A. Owner shall furnish to Contractor up to ten printed or hard copies of the Drawings and Project Manual. Additional copies will be furnished upon request at the cost of reproduction.

2.03 *Commencement of Contract Times; Notice to Proceed*

A. The Contract Times will commence to run on the thirtieth day after the Effective Date of the Agreement or, if a Notice to Proceed is given, on the day indicated in the Notice to Proceed. A Notice to Proceed may be given at any time within 30 days after the Effective Date of the Agreement. In no event will the Contract Times commence to run later than the sixtieth day after the day of Bid opening or the thirtieth day after the Effective Date of the Agreement, whichever date is earlier.

2.04 *Starting the Work*

A. Contractor shall start to perform the Work on the date when the Contract Times commence to run. No Work shall be done at the Site prior to the date on which the Contract Times commence to run.

2.05 *Before Starting Construction*

A. *Preliminary Schedules:* Within 10 days after the Effective Date of the Agreement (unless otherwise specified in the General Requirements), Contractor shall submit to Engineer for timely review:

1. a preliminary Progress Schedule indicating the times (numbers of days or dates) for starting and completing the various stages of the Work, including any Milestones specified in the Contract Documents;

2. a preliminary Schedule of Submittals; and

3. a preliminary Schedule of Values for all of the Work which includes quantities and prices of items which when added together equal the Contract Price and subdivides the Work into component parts in sufficient detail to serve as the basis for progress payments during performance of the Work. Such prices will include an appropriate amount of overhead and profit applicable to each item of Work.

2.06 *Preconstruction Conference; Designation of Authorized Representatives*

A. Before any Work at the Site is started, a conference attended by Owner, Contractor, Engineer, and others as appropriate will be held to establish a working understanding among the parties as to the Work and to discuss the schedules referred to in Paragraph 2.05.A, procedures for handling Shop Drawings and other submittals, processing Applications for Payment, and maintaining required records.

B. At this conference Owner and Contractor each shall designate, in writing, a specific individual to act as its authorized representative with respect to the services and responsibilities under the Contract. Such individuals shall have the authority to transmit instructions, receive information, render decisions relative to the Contract, and otherwise act on behalf of each respective party.

2.07 *Initial Acceptance of Schedules*

A. At least 10 days before submission of the first Application for Payment a conference attended by Contractor, Engineer, and others as appropriate will be held to review for acceptability to Engineer as provided below the schedules submitted in accordance with Paragraph 2.05.A. Contractor shall have an additional 10 days to make corrections and adjustments and to complete and resubmit the schedules. No progress payment shall be made to Contractor until acceptable schedules are submitted to Engineer.

1. The Progress Schedule will be acceptable to Engineer if it provides an orderly progression of the Work to completion within the Contract Times. Such acceptance will not impose on Engineer responsibility for the Progress Schedule, for sequencing, scheduling, or progress of the Work, nor interfere with or relieve Contractor from Contractor's full responsibility therefor.

2. Contractor's Schedule of Submittals will be acceptable to Engineer if it provides a workable arrangement for reviewing and processing the required submittals.

3. Contractor's Schedule of Values will be acceptable to Engineer as to form and substance if it provides a reasonable allocation of the Contract Price to component parts of the Work.

ARTICLE 3 – CONTRACT DOCUMENTS: INTENT, AMENDING, REUSE

3.01 *Intent*

A. The Contract Documents are complementary; what is required by one is as binding as if required by all.

B. It is the intent of the Contract Documents to describe a functionally complete project (or part thereof) to be constructed in accordance with the Contract Documents. Any labor, documentation, services, materials, or equipment that reasonably may be inferred from the Contract Documents or from prevailing custom or trade usage as being required to produce the indicated result will be provided whether or not specifically called for, at no additional cost to Owner.

C. Clarifications and interpretations of the Contract Documents shall be issued by Engineer as provided in Article 9.

3.02 *Reference Standards*

A. Standards, Specifications, Codes, Laws, and Regulations

1. Reference to standards, specifications, manuals, or codes of any technical society, organization, or association, or to Laws or Regulations, whether such reference be specific or by implication, shall mean the standard, specification, manual, code, or Laws or Regulations in effect at the time of opening of Bids (or on the Effective Date of the Agreement if there were no Bids), except as may be otherwise specifically stated in the Contract Documents.

2. No provision of any such standard, specification, manual, or code, or any instruction of a Supplier, shall be effective to change the duties or responsibilities of Owner, Contractor, or Engineer, or any of their subcontractors, consultants, agents, or employees, from those set forth in the Contract Documents. No such provision or instruction shall be effective to assign to Owner, Engineer, or any of their officers, directors, members, partners, employees, agents, consultants, or subcontractors, any duty or authority to supervise or direct the performance of the Work or any duty or authority to undertake responsibility inconsistent with the provisions of the Contract Documents.

3.03 *Reporting and Resolving Discrepancies*

A. *Reporting Discrepancies:*

1. *Contractor's Review of Contract Documents Before Starting Work*: Before undertaking each part of the Work, Contractor shall carefully study and compare the Contract Documents and check and verify pertinent figures therein and all applicable field measurements. Contractor shall promptly report in writing to Engineer any conflict, error, ambiguity, or discrepancy which Contractor discovers, or has actual knowledge of, and shall obtain a written interpretation or clarification from Engineer before proceeding with any Work affected thereby.

2. *Contractor's Review of Contract Documents During Performance of Work*: If, during the performance of the Work, Contractor discovers any conflict, error, ambiguity, or discrepancy within the Contract Documents, or between the Contract Documents and (a) any applicable Law or Regulation, (b) any standard, specification, manual, or code, or (c) any instruction of any Supplier, then Contractor shall promptly report it to Engineer in writing. Contractor shall not proceed with the Work affected thereby (except in an emergency as required by Paragraph 6.16.A) until an amendment or supplement to the Contract Documents has been issued by one of the methods indicated in Paragraph 3.04.

3. Contractor shall not be liable to Owner or Engineer for failure to report any conflict, error, ambiguity, or discrepancy in the Contract Documents unless Contractor had actual knowledge thereof.

B. *Resolving Discrepancies:*

1. Except as may be otherwise specifically stated in the Contract Documents, the provisions of the Contract Documents shall take precedence in resolving any conflict, error, ambiguity, or discrepancy between the provisions of the Contract Documents and:

   a. the provisions of any standard, specification, manual, or code, or the instruction of any Supplier (whether or not specifically incorporated by reference in the Contract Documents); or

   b. the provisions of any Laws or Regulations applicable to the performance of the Work (unless such an interpretation of the provisions of the Contract Documents would result in violation of such Law or Regulation).

3.04 *Amending and Supplementing Contract Documents*

A. The Contract Documents may be amended to provide for additions, deletions, and revisions in the Work or to modify the terms and conditions thereof by either a Change Order or a Work Change Directive.

B. The requirements of the Contract Documents may be supplemented, and minor variations and deviations in the Work may be authorized, by one or more of the following ways:

1. A Field Order;

2. Engineer's approval of a Shop Drawing or Sample (subject to the provisions of Paragraph 6.17.D.3); or

3. Engineer's written interpretation or clarification.

3.05 *Reuse of Documents*

A. Contractor and any Subcontractor or Supplier shall not:

1. have or acquire any title to or ownership rights in any of the Drawings, Specifications, or other documents (or copies of any thereof) prepared by or bearing the seal of Engineer or its consultants, including electronic media editions; or

2. reuse any such Drawings, Specifications, other documents, or copies thereof on extensions of the Project or any other project without written consent of Owner and Engineer and specific written verification or adaptation by Engineer.

B. The prohibitions of this Paragraph 3.05 will survive final payment, or termination of the Contract. Nothing herein shall preclude Contractor from retaining copies of the Contract Documents for record purposes.

3.06 *Electronic Data*

A. Unless otherwise stated in the Supplementary Conditions, the data furnished by Owner or Engineer to Contractor, or by Contractor to Owner or Engineer, that may be relied upon are limited to the printed copies (also known as hard copies). Files in electronic media format of text, data, graphics, or other types are furnished only for the convenience of the receiving party. Any conclusion or information obtained or derived from such electronic files will be at the user's sole risk. If there is a discrepancy between the electronic files and the hard copies, the hard copies govern.

B. Because data stored in electronic media format can deteriorate or be modified inadvertently or otherwise without authorization of the data's creator, the party receiving electronic files agrees that it will perform acceptance tests or procedures within 60 days, after which the receiving party shall be deemed to have accepted the data thus transferred. Any errors detected within the 60-day acceptance period will be corrected by the transferring party.

C. When transferring documents in electronic media format, the transferring party makes no representations as to long term compatibility, usability, or readability of documents resulting from the use of software application packages, operating systems, or computer hardware differing from those used by the data's creator.

ARTICLE 4 – AVAILABILITY OF LANDS; SUBSURFACE AND PHYSICAL CONDITIONS; HAZARDOUS ENVIRONMENTAL CONDITIONS; REFERENCE POINTS

4.01 *Availability of Lands*

A. Owner shall furnish the Site. Owner shall notify Contractor of any encumbrances or restrictions not of general application but specifically related to use of the Site with which Contractor must comply in performing the Work. Owner will obtain in a timely manner and pay for easements for permanent structures or permanent changes in existing facilities. If Contractor and Owner are unable to agree on entitlement to or on the amount or extent, if

any, of any adjustment in the Contract Price or Contract Times, or both, as a result of any delay in Owner's furnishing the Site or a part thereof, Contractor may make a Claim therefor as provided in Paragraph 10.05.

B. Upon reasonable written request, Owner shall furnish Contractor with a current statement of record legal title and legal description of the lands upon which the Work is to be performed and Owner's interest therein as necessary for giving notice of or filing a mechanic's or construction lien against such lands in accordance with applicable Laws and Regulations.

C. Contractor shall provide for all additional lands and access thereto that may be required for temporary construction facilities or storage of materials and equipment.

4.02 *Subsurface and Physical Conditions*

A. *Reports and Drawings:* The Supplementary Conditions identify:

1. those reports known to Owner of explorations and tests of subsurface conditions at or contiguous to the Site; and

2. those drawings known to Owner of physical conditions relating to existing surface or subsurface structures at the Site (except Underground Facilities).

B. *Limited Reliance by Contractor on Technical Data Authorized:* Contractor may rely upon the accuracy of the "technical data" contained in such reports and drawings, but such reports and drawings are not Contract Documents. Such "technical data" is identified in the Supplementary Conditions. Except for such reliance on such "technical data," Contractor may not rely upon or make any claim against Owner or Engineer, or any of their officers, directors, members, partners, employees, agents, consultants, or subcontractors with respect to:

1. the completeness of such reports and drawings for Contractor's purposes, including, but not limited to, any aspects of the means, methods, techniques, sequences, and procedures of construction to be employed by Contractor, and safety precautions and programs incident thereto; or

2. other data, interpretations, opinions, and information contained in such reports or shown or indicated in such drawings; or

3. any Contractor interpretation of or conclusion drawn from any "technical data" or any such other data, interpretations, opinions, or information.

4.03 *Differing Subsurface or Physical Conditions*

A. *Notice:* If Contractor believes that any subsurface or physical condition that is uncovered or revealed either:

1. is of such a nature as to establish that any "technical data" on which Contractor is entitled to rely as provided in Paragraph 4.02 is materially inaccurate; or

2. is of such a nature as to require a change in the Contract Documents; or

3. differs materially from that shown or indicated in the Contract Documents; or

4. is of an unusual nature, and differs materially from conditions ordinarily encountered and generally recognized as inherent in work of the character provided for in the Contract Documents;

then Contractor shall, promptly after becoming aware thereof and before further disturbing the subsurface or physical conditions or performing any Work in connection therewith (except in an emergency as required by Paragraph 6.16.A), notify Owner and Engineer in writing about such condition. Contractor shall not further disturb such condition or perform any Work in connection therewith (except as aforesaid) until receipt of written order to do so.

B. *Engineer's Review*: After receipt of written notice as required by Paragraph 4.03.A, Engineer will promptly review the pertinent condition, determine the necessity of Owner's obtaining additional exploration or tests with respect thereto, and advise Owner in writing (with a copy to Contractor) of Engineer's findings and conclusions.

C. *Possible Price and Times Adjustments:*

1. The Contract Price or the Contract Times, or both, will be equitably adjusted to the extent that the existence of such differing subsurface or physical condition causes an increase or decrease in Contractor's cost of, or time required for, performance of the Work; subject, however, to the following:

   a. such condition must meet any one or more of the categories described in Paragraph 4.03.A; and

   b. with respect to Work that is paid for on a unit price basis, any adjustment in Contract Price will be subject to the provisions of Paragraphs 9.07 and 11.03.

2. Contractor shall not be entitled to any adjustment in the Contract Price or Contract Times if:

   a. Contractor knew of the existence of such conditions at the time Contractor made a final commitment to Owner with respect to Contract Price and Contract Times by the submission of a Bid or becoming bound under a negotiated contract; or

   b. the existence of such condition could reasonably have been discovered or revealed as a result of any examination, investigation, exploration, test, or study of the Site and contiguous areas required by the Bidding Requirements or Contract Documents to be conducted by or for Contractor prior to Contractor's making such final commitment; or

   c. Contractor failed to give the written notice as required by Paragraph 4.03.A.

3. If Owner and Contractor are unable to agree on entitlement to or on the amount or extent, if any, of any adjustment in the Contract Price or Contract Times, or both, a Claim may be made therefor as provided in Paragraph 10.05. However, neither Owner or Engineer, or any of their officers, directors, members, partners, employees, agents, consultants, or subcontractors shall be liable to Contractor for any claims, costs, losses, or damages (including but not limited to all fees and charges of engineers, architects, attorneys, and other professionals and all court or arbitration or other dispute resolution costs) sustained by Contractor on or in connection with any other project or anticipated project.

4.04 *Underground Facilities*

A. *Shown or Indicated:* The information and data shown or indicated in the Contract Documents with respect to existing Underground Facilities at or contiguous to the Site is based on information and data furnished to Owner or Engineer by the owners of such Underground Facilities, including Owner, or by others. Unless it is otherwise expressly provided in the Supplementary Conditions:

1. Owner and Engineer shall not be responsible for the accuracy or completeness of any such information or data provided by others; and

2. the cost of all of the following will be included in the Contract Price, and Contractor shall have full responsibility for:

   a. reviewing and checking all such information and data;

   b. locating all Underground Facilities shown or indicated in the Contract Documents;

   c. coordination of the Work with the owners of such Underground Facilities, including Owner, during construction; and

d. the safety and protection of all such Underground Facilities and repairing any damage thereto resulting from the Work.

B. *Not Shown or Indicated:*

1. If an Underground Facility is uncovered or revealed at or contiguous to the Site which was not shown or indicated, or not shown or indicated with reasonable accuracy in the Contract Documents, Contractor shall, promptly after becoming aware thereof and before further disturbing conditions affected thereby or performing any Work in connection therewith (except in an emergency as required by Paragraph 6.16.A), identify the owner of such Underground Facility and give written notice to that owner and to Owner and Engineer. Engineer will promptly review the Underground Facility and determine the extent, if any, to which a change is required in the Contract Documents to reflect and document the consequences of the existence or location of the Underground Facility. During such time, Contractor shall be responsible for the safety and protection of such Underground Facility.

2. If Engineer concludes that a change in the Contract Documents is required, a Work Change Directive or a Change Order will be issued to reflect and document such consequences. An equitable adjustment shall be made in the Contract Price or Contract Times, or both, to the extent that they are attributable to the existence or location of any Underground Facility that was not shown or indicated or not shown or indicated with reasonable accuracy in the Contract Documents and that Contractor did not know of and could not reasonably have been expected to be aware of or to have anticipated. If Owner and Contractor are unable to agree on entitlement to or on the amount or extent, if any, of any such adjustment in Contract Price or Contract Times, Owner or Contractor may make a Claim therefor as provided in Paragraph 10.05.

4.05 *Reference Points*

A. Owner shall provide engineering surveys to establish reference points for construction which in Engineer's judgment are necessary to enable Contractor to proceed with the Work. Contractor shall be responsible for laying out the Work, shall protect and preserve the established reference points and property monuments, and shall make no changes or relocations without the prior written approval of Owner. Contractor shall report to Engineer whenever any reference point or property monument is lost or destroyed or requires relocation because of necessary changes in grades or locations, and shall be responsible for the accurate replacement or relocation of such reference points or property monuments by professionally qualified personnel.

4.06 *Hazardous Environmental Condition at Site*

A. *Reports and Drawings:* The Supplementary Conditions identify those reports and drawings known to Owner relating to Hazardous Environmental Conditions that have been identified at the Site.

B. *Limited Reliance by Contractor on Technical Data Authorized:* Contractor may rely upon the accuracy of the "technical data" contained in such reports and drawings, but such reports and drawings are not Contract Documents. Such "technical data" is identified in the Supplementary Conditions. Except for such reliance on such "technical data," Contractor may not rely upon or make any claim against Owner or Engineer, or any of their officers, directors, members, partners, employees, agents, consultants, or subcontractors with respect to:

1. the completeness of such reports and drawings for Contractor's purposes, including, but not limited to, any aspects of the means, methods, techniques, sequences and procedures of construction to be employed by Contractor and safety precautions and programs incident thereto; or

2. other data, interpretations, opinions and information contained in such reports or shown or indicated in such drawings; or

3. any Contractor interpretation of or conclusion drawn from any "technical data" or any such other data, interpretations, opinions or information.

C. Contractor shall not be responsible for any Hazardous Environmental Condition uncovered or revealed at the Site which was not shown or indicated in Drawings or Specifications or identified in the Contract Documents to be

within the scope of the Work. Contractor shall be responsible for a Hazardous Environmental Condition created with any materials brought to the Site by Contractor, Subcontractors, Suppliers, or anyone else for whom Contractor is responsible.

1. The Contractor's scope of work shall include implementation of necessary safety, public health and environmental procedures and requirements relating to sanitary sewage encountered during the work.

2. The Contractor's scope of work shall include necessary safety and environmental requirements for handling and disposal of asbestos pipe removed from service or excavated during the course of the work.

D. If Contractor encounters a Hazardous Environmental Condition not indicated in the Drawings or Specifications or identified in the Contract Documents or if Contractor or anyone for whom Contractor is responsible creates a Hazardous Environmental Condition, Contractor shall immediately: (i) secure or otherwise isolate such condition; (ii) stop all Work in connection with such condition and in any area affected thereby (except in an emergency as required by Paragraph 6.16.A); and (iii) notify Owner and Engineer (and promptly thereafter confirm such notice in writing). Owner shall promptly consult with Engineer concerning the necessity for Owner to retain a qualified expert to evaluate such condition or take corrective action, if any. Promptly after consulting with Engineer, Owner shall take such actions as are necessary to permit Owner to timely obtain required permits and provide Contractor the written notice required by Paragraph 4.06.E.

E. Contractor shall not be required to resume Work in connection with such condition or in any affected area until after Owner has obtained any required permits related thereto and delivered written notice to Contractor: (i) specifying that such condition and any affected area is or has been rendered safe for the resumption of Work; or (ii) specifying any special conditions under which such Work may be resumed safely. If Owner and Contractor cannot agree as to entitlement to or on the amount or extent, if any, of any adjustment in Contract Price or Contract Times, or both, as a result of such Work stoppage or such special conditions under which Work is agreed to be resumed by Contractor, either party may make a Claim therefor as provided in Paragraph 10.05.

F. If after receipt of such written notice Contractor does not agree to resume such Work based on a reasonable belief it is unsafe, or does not agree to resume such Work under such special conditions, then Owner may order the portion of the Work that is in the area affected by such condition to be deleted from the Work. If Owner and Contractor cannot agree as to entitlement to or on the amount or extent, if any, of an adjustment in Contract Price or Contract Times as a result of deleting such portion of the Work, then either party may make a Claim therefor as provided in Paragraph 10.05. Owner may have such deleted portion of the Work performed by Owner's own forces or others in accordance with Article 7.

G. To the fullest extent permitted by Laws and Regulations, Owner shall indemnify and hold harmless Contractor, Subcontractors, and Engineer, and the officers, directors, members, partners, employees, agents, consultants, and subcontractors of each and any of them from and against all claims, costs, losses, and damages (including but not limited to all fees and charges of engineers, architects, attorneys, and other professionals and all court or arbitration or other dispute resolution costs) arising out of or relating to a Hazardous Environmental Condition, provided that such Hazardous Environmental Condition: (i) was not shown or indicated in the Drawings or Specifications or identified in the Contract Documents to be included within the scope of the Work, and (ii) was not created by Contractor or by anyone for whom Contractor is responsible. Nothing in this Paragraph 4.06.G shall obligate Owner to indemnify any individual or entity from and against the consequences of that individual's or entity's own negligent acts or omissions ~~negligence~~.

H. To the fullest extent permitted by Laws and Regulations, Contractor shall indemnify and hold harmless Owner and Engineer, and the officers, directors, members, partners, employees, agents, consultants, and subcontractors of each and any of them from and against all claims, costs, losses, and damages (including but not limited to all fees and charges of engineers, architects, attorneys, and other professionals and all court or arbitration or other dispute resolution costs) arising out of or relating to a Hazardous Environmental Condition created by Contractor or by anyone for whom Contractor is responsible. Nothing in this Paragraph 4.06.H shall obligate Contractor to indemnify any individual or entity from and against the consequences of that individual's or entity's own negligence.

I. The provisions of Paragraphs 4.02, 4.03, and 4.04 do not apply to a Hazardous Environmental Condition uncovered or revealed at the Site.

ARTICLE 5 – BONDS AND INSURANCE

5.01 *Performance, Payment, and Other Bonds*

A. Contractor shall furnish performance and payment bonds, each in an amount at least equal to the Contract Price as security for the faithful performance and payment of all of Contractor's obligations under the Contract Documents. These bonds shall remain in effect until one year after the date when final payment becomes due or until completion of the correction period specified in Paragraph 13.07, whichever is later, except as provided otherwise by Laws or Regulations or by the Contract Documents. Contractor shall also furnish such other bonds as are required by the Contract Documents.

B. All bonds shall be in the form prescribed by the Contract Documents except as provided otherwise by Laws or Regulations, and shall be executed by such sureties as are named in the list of "Companies Holding Certificates of Authority as Acceptable Sureties on Federal Bonds and as Acceptable Reinsuring Companies" as published in Circular 570 (amended) by the Financial Management Service, Surety Bond Branch, U.S. Department of the Treasury. All bonds signed by an agent or attorney-in-fact must be accompanied by a certified copy of that individual's authority to bind the surety. The evidence of authority shall show that it is effective on the date the agent or attorney-in-fact signed each bond.

C. If the surety on any bond furnished by Contractor is declared bankrupt or becomes insolvent or its right to do business is terminated in any state where any part of the Project is located or it ceases to meet the requirements of Paragraph 5.01.B, Contractor shall promptly notify Owner and Engineer and shall, within 20 days after the event giving rise to such notification, provide another bond and surety, both of which shall comply with the requirements of Paragraphs 5.01.B and 5.02.

5.02 *Licensed Sureties and Insurers*

A. All bonds and insurance required by the Contract Documents to be purchased and maintained by Owner or Contractor shall be obtained from surety or insurance companies that are duly licensed or authorized in the jurisdiction in which the Project is located to issue bonds or insurance policies for the limits and coverages so required. Such surety and insurance companies shall also meet such additional requirements and qualifications as may be provided in the Supplementary Conditions. Surety and insurance companies from which the bonds and insurance for this Project are purchased shall have a Best's rating of no less than A:VII, in addition to the other requirements specified herein.

5.03 *Certificates of Insurance*

A. Contractor shall deliver to Owner, with copies to each additional insured and loss payee identified in the Supplementary Conditions, certificates of insurance (and other evidence of insurance requested by Owner or any other additional insured) which Contractor is required to purchase and maintain.

B. Owner shall deliver to Contractor, with copies to each additional insured and loss payee identified in the Supplementary Conditions, certificates of insurance (and other evidence of insurance requested by Contractor or any other additional insured) which Owner is required to purchase and maintain.

C. Failure of Owner to demand such certificates or other evidence of Contractor's full compliance with these insurance requirements or failure of Owner to identify a deficiency in compliance from the evidence provided shall not be construed as a waiver of Contractor's obligation to maintain such insurance.

D. Owner does not represent that insurance coverage and limits established in this Contract necessarily will be adequate to protect Contractor.

E. The insurance and insurance limits required herein shall not be deemed as a limitation on Contractor's liability under the indemnities granted to Owner in the Contract Documents.

5.04 *Contractor's Insurance*

A. Contractor shall purchase and maintain such insurance as is appropriate for the Work being performed and as will provide protection from claims set forth below which may arise out of or result from Contractor's performance of the Work and Contractor's other obligations under the Contract Documents, whether it is to be performed by Contractor, any Subcontractor or Supplier, or by anyone directly or indirectly employed by any of them to perform any of the Work, or by anyone for whose acts any of them may be liable:

1. claims under workers' compensation, disability benefits, and other similar employee benefit acts;

2. claims for damages because of bodily injury, occupational sickness or disease, or death of Contractor's employees;

3. claims for damages because of bodily injury, sickness or disease, or death of any person other than Contractor's employees;

4. claims for damages insured by reasonably available personal injury liability coverage which are sustained:

   a. by any person as a result of an offense directly or indirectly related to the employment of such person by Contractor, or

   b. by any other person for any other reason;

5. claims for damages, other than to the Work itself, because of injury to or destruction of tangible property wherever located, including loss of use resulting therefrom; and

6. claims for damages because of bodily injury or death of any person or property damage arising out of the ownership, maintenance or use of any motor vehicle.

B. The policies of insurance required by this Paragraph 5.04 shall:

1. with respect to insurance required by Paragraphs 5.04.A.3 through 5.04.A.6 inclusive, be written on an occurrence basis, include as additional insureds (subject to any customary exclusion regarding professional liability) Owner and Engineer, and any other individuals or entities identified in the Supplementary Conditions, all of whom shall be listed as additional insureds, and include coverage for the respective officers, directors, members, partners, employees, agents, consultants, and subcontractors of each and any of all such additional insureds, and the insurance afforded to these additional insureds shall provide primary coverage for all claims covered thereby;

2. include at least the specific coverages and be written for not less than the limits of liability provided in the Supplementary Conditions or required by Laws or Regulations, whichever is greater;

3. include contractual liability insurance covering Contractor's indemnity obligations under Paragraphs 6.11 and 6.20;

4. contain a provision or endorsement that the coverage afforded will not be canceled, materially changed or renewal refused until at least 30 days prior written notice has been given to Owner and Contractor and to each other additional insured identified in the Supplementary Conditions to whom a certificate of insurance has been issued (and the certificates of insurance furnished by the Contractor pursuant to Paragraph 5.03 will so provide);

5. remain in effect at least until final payment and at all times thereafter when Contractor may be correcting, removing, or replacing defective Work in accordance with Paragraph 13.07;

6. include completed operations coverage:

   a. Such insurance shall remain in effect for two years after final payment.

b. Contractor shall furnish Owner and each other additional insured identified in the Supplementary Conditions, to whom a certificate of insurance has been issued, evidence satisfactory to Owner and any such additional insured of continuing coverage during the two year period ~~of continuation of such insurance at final payment and one year thereafter~~.

5.05 *Owner's Liability Insurance*

A. In addition to the insurance required to be provided by Contractor under Paragraph 5.04, Owner, at Owner's option, may purchase and maintain at Owner's expense Owner's own liability insurance as will protect Owner against claims which may arise from operations under the Contract Documents.

5.06 *Property Insurance*

NOTES TO USER

The Owner, in consultation with their attorney and risk manager, should choose which party shall provide property insurance. In accordance with the Owner's direction, use the appropriate Section A below.

A. Unless otherwise provided in the Supplementary Conditions, Owner shall purchase and maintain property insurance upon the Work at the Site in the amount of the full replacement cost thereof (subject to such deductible amounts as may be provided in the Supplementary Conditions or required by Laws and Regulations). This insurance shall:

1. include the interests of Owner, Contractor, Subcontractors, and Engineer, and any other individuals or entities identified in the Supplementary Conditions, and the officers, directors, members, partners, employees, agents, consultants, and subcontractors of each and any of them, each of whom is deemed to have an insurable interest and shall be listed as a loss payee;

2. be written on a Builder's Risk "all-risk" or open peril or special causes of loss policy form that shall at least include insurance for physical loss or damage to the Work, temporary buildings, false work, and materials and equipment in transit, and shall insure against at least the following perils or causes of loss: fire, lightning, extended coverage, theft, vandalism and malicious mischief, earthquake, collapse, debris removal, demolition occasioned by enforcement of Laws and Regulations, water damage, and such other perils or causes of loss as may be specifically required by the Supplementary Conditions;

3. include expenses incurred in the repair or replacement of any insured property (including but not limited to fees and charges of engineers and architects);

4. cover materials and equipment stored at the Site or at another location that was agreed to in writing by Owner prior to being incorporated in the Work, provided that such materials and equipment have been included in an Application for Payment recommended by Engineer;

5. allow for partial utilization of the Work by Owner;

6. include testing and startup; and

7. be maintained in effect until final payment is made unless otherwise agreed to in writing by Owner, Contractor, and Engineer with 30 days written notice to each other additional insured to whom a certificate of insurance has been issued.

A. Contractor shall purchase and maintain property insurance upon the Work at the Site in the amount of the full replacement cost thereof. This insurance shall:

1. include the interests of Owner, Contractor, Subcontractors, Engineer, Engineer's Consultants and any other individuals or entities identified in the Supplementary Conditions, and the officers, directors, partners,

employees, agents and other consultants and subcontractors of any of them each of whom is deemed to have an insurable interest and shall be listed as a loss payee;

2. be written on a Builder's Risk "all-risk" or open peril or special causes of loss policy form that shall at least include insurance for physical loss and damage to the Work, temporary buildings, falsework, and materials and equipment in transit and shall insure against at least the following perils or causes of loss: fire, lightning, extended coverage, theft, vandalism and malicious mischief, earthquake, collapse, debris removal, demolition occasioned by enforcement of Laws and Regulations, water damage, and such other perils or causes of loss as may be specifically required by the Supplementary Conditions.

3. include expenses incurred in the repair or replacement of any insured property (including but not limited to fees and charges of engineers and architects);

4. cover materials and equipment stored at the Site or at another location that was agreed to in writing by Owner prior to being incorporated in the Work, provided that such materials and equipment have been included in an Application for Payment recommended by Engineer;

5. allow for partial utilization of the Work by Owner;

6. include testing and startup; and

7. be maintained in effect until final payment is made unless otherwise agreed to in writing by Owner, Contractor, and Engineer with 30 days written notice to each other loss payee to whom a certificate of insurance has been issued.

B. ~~Owner~~Contractor shall purchase and maintain such equipment breakdown insurance or additional property insurance as may be required by the Supplementary Conditions or Laws and Regulations which will include the interests of Owner, Contractor, Subcontractors, and Engineer, and any other individuals or entities identified in the Supplementary Conditions, and the officers, directors, members, partners, employees, agents, consultants and subcontractors of each and any of them, each of whom is deemed to have an insurable interest and shall be listed as a loss payee.

C. All the policies of insurance (and the certificates or other evidence thereof) required to be purchased and maintained in accordance with this Paragraph 5.06 will contain a provision or endorsement that the coverage afforded will not be canceled or materially changed or renewal refused until at least 30 days prior written notice has been given to Owner and Contractor and to each other loss payee to whom a certificate of insurance has been issued and will contain waiver provisions in accordance with Paragraph 5.07.

~~D. Owner shall not be responsible for purchasing and maintaining any property insurance specified in this Paragraph 5.06 to protect the interests of Contractor, Subcontractors, or others in the Work to the extent of any deductible amounts that are identified in the Supplementary Conditions. The risk of loss within such identified deductible amount will be borne by Contractor, Subcontractors, or others suffering any such loss, and if any of them wishes property insurance coverage within the limits of such amounts, each may purchase and maintain it at the purchaser's own expense.~~

D. Contractor shall be responsible for any deductible or self-insured retention.

~~E. If Contractor requests in writing that other special insurance be included in the property insurance policies provided under this Paragraph 5.06, Owner shall, if possible, include such insurance, and the cost thereof will be charged to Contractor by appropriate Change Order Prior to commencement of the Work at the Site, Owner shall in writing advise Contractor whether or not such other insurance has been procured by Owner.~~

E. If Owner requests in writing that other special perils be included in the property insurance policies provided under paragraphs 5.06.A or 5.06.B of the General Conditions, Contractor shall, if possible, include such insurance, and the cost thereof will be charged to Owner by appropriate Change Order or Written Amendment. Prior to commencement of the Work at the site, Contractor shall in writing advise Owner whether or not such other insurance has been procured by Contractor.

5.07 *Waiver of Rights*

A. Owner and Contractor intend that all policies purchased in accordance with Paragraph 5.06 will protect Owner, Contractor, Subcontractors, and Engineer, and all other individuals or entities identified in the Supplementary Conditions as loss payees (and the officers, directors, members, partners, employees, agents, consultants, and subcontractors of each and any of them) in such policies and will provide primary coverage for all losses and damages caused by the perils or causes of loss covered thereby. All such policies shall contain provisions to the effect that in the event of payment of any loss or damage the insurers will have no rights of recovery against any of the insureds or loss payees thereunder. Owner and Contractor waive all rights against each other and their respective officers, directors, members, partners, employees, agents, consultants and subcontractors of each and any of them for all losses and damages caused by, arising out of or resulting from any of the perils or causes of loss covered by such policies and any other property insurance applicable to the Work; and, in addition, waive all such rights against Subcontractors and Engineer, and all other individuals or entities identified in the Supplementary Conditions as loss payees (and the officers, directors, members, partners, employees, agents, consultants, and subcontractors of each and any of them) under such policies for losses and damages so caused. None of the above waivers shall extend to the rights that any party making such waiver may have to the proceeds of insurance held by Owner as trustee or otherwise payable under any policy so issued.

B. Owner waives all rights against Contractor, Subcontractors, and Engineer, and the officers, directors, members, partners, employees, agents, consultants and subcontractors of each and any of them for:

1. loss due to business interruption, loss of use, or other consequential loss extending beyond direct physical loss or damage to Owner's property or the Work caused by, arising out of, or resulting from fire or other perils whether or not insured by Owner; and

2. loss or damage to the completed Project or part thereof caused by, arising out of, or resulting from fire or other insured peril or cause of loss covered by any property insurance maintained on the completed Project or part thereof by Owner during partial utilization pursuant to Paragraph 14.05, after Substantial Completion pursuant to Paragraph 14.04, or after final payment pursuant to Paragraph 14.07.

C. Any insurance policy maintained by Owner covering any loss, damage or consequential loss referred to in Paragraph 5.07.B shall contain provisions to the effect that in the event of payment of any such loss, damage, or consequential loss, the insurers will have no rights of recovery against Contractor, Subcontractors, or Engineer, and the officers, directors, members, partners, employees, agents, consultants and subcontractors of each and any of them.

5.08 *Receipt and Application of Insurance Proceeds*

A. Any insured loss under the policies of insurance required by Paragraph 5.06 will be adjusted with Owner and made payable to Owner as fiduciary for the loss payees, as their interests may appear, subject to the requirements of any applicable mortgage clause and of Paragraph 5.08.B. Owner shall deposit in a separate account any money so received and shall distribute it in accordance with such agreement as the parties in interest may reach. If no other special agreement is reached, the damaged Work shall be repaired or replaced, the moneys so received applied on account thereof, and the Work and the cost thereof covered by an appropriate Change Order.

B. Owner as fiduciary shall have power to adjust and settle any loss with the insurers unless one of the parties in interest shall object in writing within 15 days after the occurrence of loss to Owner's exercise of this power. If such objection be made, Owner as fiduciary shall make settlement with the insurers in accordance with such agreement as the parties in interest may reach. If no such agreement among the parties in interest is reached, Owner as fiduciary shall adjust and settle the loss with the insurers and, if required in writing by any party in interest, Owner as fiduciary shall give bond for the proper performance of such duties.

5.09 *Acceptance of Bonds and Insurance; Option to Replace*

A. If either Owner or Contractor has any objection to the coverage afforded by or other provisions of the bonds or insurance required to be purchased and maintained by the other party in accordance with Article 5 on the basis of non-conformance with the Contract Documents, the objecting party shall so notify the other party in writing

within 10 days after receipt of the certificates (or other evidence requested) required by Paragraph 2.01.B. Owner and Contractor shall each provide to the other such additional information in respect of insurance provided as the other may reasonably request. If either party does not purchase or maintain all of the bonds and insurance required of such party by the Contract Documents, such party shall notify the other party in writing of such failure to purchase prior to the start of the Work, or of such failure to maintain prior to any change in the required coverage. Without prejudice to any other right or remedy, the other party may elect to obtain equivalent bonds or insurance to protect such other party's interests at the expense of the party who was required to provide such coverage, and a Change Order shall be issued to adjust the Contract Price accordingly.

5.10 *Partial Utilization, Acknowledgment of Property Insurer*

A. If Owner finds it necessary to occupy or use a portion or portions of the Work prior to Substantial Completion of all the Work as provided in Paragraph 14.05, no such use or occupancy shall commence before the insurers providing the property insurance pursuant to Paragraph 5.06 have acknowledged notice thereof and in writing effected any changes in coverage necessitated thereby. The insurers providing the property insurance shall consent by endorsement on the policy or policies, but the property insurance shall not be canceled or permitted to lapse on account of any such partial use or occupancy.

ARTICLE 6 – CONTRACTOR'S RESPONSIBILITIES

6.01 *Supervision and Superintendence*

A. Contractor shall supervise, inspect, and direct the Work competently and efficiently, devoting such attention thereto and applying such skills and expertise as may be necessary to perform the Work in accordance with the Contract Documents. Contractor shall be solely responsible for the means, methods, techniques, sequences, and procedures of construction. Contractor shall not be responsible for the negligence of Owner or Engineer in the design or specification of a specific means, method, technique, sequence, or procedure of construction which is shown or indicated in and expressly required by the Contract Documents.

B. At all times during the progress of the Work, Contractor shall assign a competent resident superintendent who shall not be replaced without written notice to Owner and Engineer except under extraordinary circumstances.

6.02 *Labor; Working Hours*

A. Contractor shall provide competent, suitably qualified personnel to survey and lay out the Work and perform construction as required by the Contract Documents. Contractor shall at all times maintain good discipline and order at the Site.

B. Except as otherwise required for the safety or protection of persons or the Work or property at the Site or adjacent thereto, and except as otherwise stated in the Contract Documents, all Work at the Site shall be performed during regular working hours. Contractor will not permit ~~overtime work or~~ the performance of Work outside the regular working hours or on a Saturday, Sunday, or any legal holiday without Owner's written consent (which will not be unreasonably withheld) given after prior written notice to Engineer.

6.03 *Services, Materials, and Equipment*

A. Unless otherwise specified in the Contract Documents, Contractor shall provide and assume full responsibility for all services, materials, equipment, labor, transportation, construction equipment and machinery, tools, appliances, fuel, power, light, heat, telephone, water, sanitary facilities, temporary facilities, and all other facilities and incidentals necessary for the performance, testing, start-up, and completion of the Work.

B. All materials and equipment incorporated into the Work shall be as specified or, if not specified, shall be of good quality and new, except as otherwise provided in the Contract Documents. All warranties, special warranties and guarantees required by the Specifications shall expressly run to the benefit of Owner. If required by Engineer, Contractor shall furnish satisfactory evidence (including reports of required tests) as to the source, kind, and quality of materials and equipment.

C. All materials and equipment shall be stored, applied, installed, connected, erected, protected, used, cleaned, and conditioned in accordance with instructions of the applicable Supplier, except as otherwise may be provided in the Contract Documents.

6.04 *Progress Schedule*

A. Contractor shall adhere to the Progress Schedule established in accordance with Paragraph 2.07 as it may be adjusted from time to time as provided below.

1. Contractor shall submit to Engineer for acceptance (to the extent indicated in Paragraph 2.07) proposed adjustments in the Progress Schedule that will not result in changing the Contract Times. Such adjustments will comply with any provisions of the General Requirements applicable thereto.

2. Proposed adjustments in the Progress Schedule that will change the Contract Times shall be submitted in accordance with the requirements of Article 12. Adjustments in Contract Times may only be made by a Change Order.

6.05 *Substitutes and "Or-Equals"*

A. Whenever an item of material or equipment is specified or described in the Contract Documents by using the name of a proprietary item or the name of a particular Supplier, the specification or description is intended to establish the type, function, appearance, and quality required. Unless the specification or description contains or is followed by words reading that no like, equivalent, or "or-equal" item or no substitution is permitted, other items of material or equipment or material or equipment of other Suppliers may be submitted to Engineer for review under the circumstances described below.

1. *"Or-Equal" Items:* If in Engineer's sole discretion an item of material or equipment proposed by Contractor is functionally equal to that named and sufficiently similar so that no change in related Work will be required, it may be considered by Engineer as an "or-equal" item, in which case review and approval of the proposed item may, in Engineer's sole discretion, be accomplished without compliance with some or all of the requirements for approval of proposed substitute items. For the purposes of this Paragraph 6.05.A.1, a proposed item of material or equipment will be considered functionally equal to an item so named if:

a. in the exercise of reasonable judgment Engineer determines that:

1) it is at least equal in materials of construction, quality, durability, appearance, strength, and design characteristics;

2) it will reliably perform at least equally well the function and achieve the results imposed by the design concept of the completed Project as a functioning whole; and,

3) it has a proven record of performance and availability of responsive service.

b. Contractor certifies that, if approved and incorporated into the Work:

1) there will be no increase in cost to the Owner or increase in Contract Times; and

2) it will conform substantially to the detailed requirements of the item named in the Contract Documents.

2. *Substitute Items:*

a. If in Engineer's sole discretion an item of material or equipment proposed by Contractor does not qualify as an "or-equal" item under Paragraph 6.05.A.1, it will be considered a proposed substitute item.

b. Contractor shall submit sufficient information as provided below to allow Engineer to determine if the item of material or equipment proposed is essentially equivalent to that named and an acceptable

substitute therefor. Requests for review of proposed substitute items of material or equipment will not be accepted by Engineer from anyone other than Contractor.

c. The requirements for review by Engineer will be as set forth in Paragraph 6.05.A.2.d, as supplemented by the General Requirements, and as Engineer may decide is appropriate under the circumstances.

d. Contractor shall make written application to Engineer for review of a proposed substitute item of material or equipment that Contractor seeks to furnish or use. The application:

1) shall certify that the proposed substitute item will:

a) perform adequately the functions and achieve the results called for by the general design,

b) be similar in substance to that specified, and

c) be suited to the same use as that specified;

2) will state:

a) the extent, if any, to which the use of the proposed substitute item will prejudice Contractor's achievement of Substantial Completion on time,

b) whether use of the proposed substitute item in the Work will require a change in any of the Contract Documents (or in the provisions of any other direct contract with Owner for other work on the Project) to adapt the design to the proposed substitute item, and

c) whether incorporation or use of the proposed substitute item in connection with the Work is subject to payment of any license fee or royalty;

3) will identify:

a) all variations of the proposed substitute item from that specified, and

b) available engineering, sales, maintenance, repair, and replacement services; and

4) shall contain an itemized estimate of all costs or credits that will result directly or indirectly from use of such substitute item, including costs of redesign and claims of other contractors affected by any resulting change.

B. *Substitute Construction Methods or Procedures:* If a specific means, method, technique, sequence, or procedure of construction is expressly required by the Contract Documents, Contractor may furnish or utilize a substitute means, method, technique, sequence, or procedure of construction approved by Engineer. Contractor shall submit sufficient information to allow Engineer, in Engineer's sole discretion, to determine that the substitute proposed is equivalent to that expressly called for by the Contract Documents. The requirements for review by Engineer will be similar to those provided in Paragraph 6.05.A.2.

C. *Engineer's Evaluation:* Engineer will be allowed a reasonable time within which to evaluate each proposal or submittal made pursuant to Paragraphs 6.05.A and 6.05.B. Engineer may require Contractor to furnish additional data about the proposed substitute item. Engineer will be the sole judge of acceptability. No "or equal" or substitute will be ordered, installed or utilized until Engineer's review is complete, which will be evidenced by a Change Order in the case of a substitute and an approved Shop Drawing for an "or equal." Engineer will advise Contractor in writing of any negative determination.

D. *Special Guarantee:* Owner may require Contractor to furnish at Contractor's expense a special performance guarantee or other surety with respect to any substitute.

E. *Engineer's Cost Reimbursement*: Engineer will record Engineer's costs in evaluating a substitute proposed or submitted by Contractor pursuant to Paragraphs 6.05.A.2 and 6.05.B. Whether or not Engineer approves a substitute so proposed or submitted by Contractor, Contractor shall reimburse Owner for the reasonable charges of Engineer for evaluating each such proposed substitute. Contractor shall also reimburse Owner for the reasonable charges of Engineer for making changes in the Contract Documents (or in the provisions of any other direct contract with Owner) resulting from the acceptance of each proposed substitute.

F. *Contractor's Expense*: Contractor shall provide all data in support of any proposed substitute or "or-equal" at Contractor's expense.

6.06 *Concerning Subcontractors, Suppliers, and Others*

A. Contractor shall not employ any Subcontractor, Supplier, or other individual or entity (including those acceptable to Owner as indicated in Paragraph 6.06.B), whether initially or as a replacement, against whom Owner may have reasonable objection. Contractor shall not be required to employ any Subcontractor, Supplier, or other individual or entity to furnish or perform any of the Work against whom Contractor has reasonable objection.

B. If the Supplementary Conditions require the identity of certain Subcontractors, Suppliers, or other individuals or entities to be submitted to Owner in advance for acceptance by Owner by a specified date prior to the Effective Date of the Agreement, and if Contractor has submitted a list thereof in accordance with the Supplementary Conditions, Owner's acceptance (either in writing or by failing to make written objection thereto by the date indicated for acceptance or objection in the Bidding Documents or the Contract Documents) of any such Subcontractor, Supplier, or other individual or entity so identified may be revoked on the basis of reasonable objection after due investigation. Contractor shall submit an acceptable replacement for the rejected Subcontractor, Supplier, or other individual or entity, and the Contract Price will be adjusted by the difference in the cost occasioned by such replacement, and an appropriate Change Order will be issued. No acceptance by Owner of any such Subcontractor, Supplier, or other individual or entity, whether initially or as a replacement, shall constitute a waiver of any right of Owner or Engineer to reject defective Work.

C. Contractor shall be fully responsible to Owner and Engineer for all acts and omissions of the Subcontractors, Suppliers, and other individuals or entities performing or furnishing any of the Work just as Contractor is responsible for Contractor's own acts and omissions. Nothing in the Contract Documents:

1. shall create for the benefit of any such Subcontractor, Supplier, or other individual or entity any contractual relationship between Owner or Engineer and any such Subcontractor, Supplier or other individual or entity; nor

2. shall create any obligation on the part of Owner or Engineer to pay or to see to the payment of any moneys due any such Subcontractor, Supplier, or other individual or entity except as may otherwise be required by Laws and Regulations.

D. Contractor shall be solely responsible for scheduling and coordinating the Work of Subcontractors, Suppliers, and other individuals or entities performing or furnishing any of the Work under a direct or indirect contract with Contractor.

E. Contractor shall require all Subcontractors, Suppliers, and such other individuals or entities performing or furnishing any of the Work to communicate with Engineer through Contractor.

F. The divisions and sections of the Specifications and the identifications of any Drawings shall not control Contractor in dividing the Work among Subcontractors or Suppliers or delineating the Work to be performed by any specific trade.

G. All Work performed for Contractor by a Subcontractor or Supplier will be pursuant to an appropriate agreement between Contractor and the Subcontractor or Supplier which specifically binds the Subcontractor or Supplier to the applicable terms and conditions of the Contract Documents for the benefit of Owner and Engineer. Whenever any such agreement is with a Subcontractor or Supplier ~~who is listed as a loss payee~~ whose interests are included on the property insurance provided in Paragraph 5.06, the agreement between the Contractor and the

Subcontractor or Supplier will contain provisions whereby the Subcontractor or Supplier waives all rights against Owner, Contractor, Engineer, and all other individuals or entities identified in the Supplementary Conditions to be listed as insureds or loss payees (and the officers, directors, members, partners, employees, agents, consultants, and subcontractors of each and any of them) for all losses and damages caused by, arising out of, relating to, or resulting from any of the perils or causes of loss covered by such policies and any other property insurance applicable to the Work. If the insurers on any such policies require separate waiver forms to be signed by any Subcontractor or Supplier, Contractor will obtain the same.

6.07 *Patent Fees and Royalties*

A. Contractor shall pay all license fees and royalties and assume all costs incident to the use in the performance of the Work or the incorporation in the Work of any invention, design, process, product, or device which is the subject of patent rights or copyrights held by others. If a particular invention, design, process, product, or device is specified in the Contract Documents for use in the performance of the Work and if, to the actual knowledge of Owner or Engineer, its use is subject to patent rights or copyrights calling for the payment of any license fee or royalty to others, the existence of such rights shall be disclosed by Owner in the Contract Documents.

B. To the fullest extent permitted by Laws and Regulations, Owner shall indemnify and hold harmless Contractor, and its officers, directors, members, partners, employees, agents, consultants, and subcontractors from and against all claims, costs, losses, and damages (including but not limited to all fees and charges of engineers, architects, attorneys, and other professionals, and all court or arbitration or other dispute resolution costs) arising out of or relating to any infringement of patent rights or copyrights incident to the use in the performance of the Work or resulting from the incorporation in the Work of any invention, design, process, product, or device specified in the Contract Documents, but not identified as being subject to payment of any license fee or royalty to others required by patent rights or copyrights

C. To the fullest extent permitted by Laws and Regulations, Contractor shall indemnify and hold harmless Owner and Engineer, and the officers, directors, members, partners, employees, agents, consultants and subcontractors of each and any of them from and against all claims, costs, losses, and damages (including but not limited to all fees and charges of engineers, architects, attorneys, and other professionals and all court or arbitration or other dispute resolution costs) arising out of or relating to any infringement of patent rights or copyrights incident to the use in the performance of the Work or resulting from the incorporation in the Work of any invention, design, process, product, or device not specified in the Contract Documents..

6.08 *Permits*

A. Unless otherwise provided in the Supplementary Conditions, Contractor shall obtain and pay for all construction permits and licenses. Owner shall assist Contractor, when necessary, in obtaining such permits and licenses. Contractor shall pay all governmental charges and inspection fees necessary for the prosecution of the Work which are applicable at the time of opening of Bids, or, if there are no Bids, on the Effective Date of the Agreement. Owner shall pay all charges of utility owners for connections for providing permanent service to the Work.

6.09 *Laws and Regulations*

A. Contractor shall give all notices required by and shall comply with all Laws and Regulations applicable to the performance of the Work. Except where otherwise expressly required by applicable Laws and Regulations, neither Owner nor Engineer shall be responsible for monitoring Contractor's compliance with any Laws or Regulations.

B. If Contractor performs any Work knowing or having reason to know that it is contrary to Laws or Regulations, Contractor shall bear all claims, costs, losses, and damages (including but not limited to all fees and charges of engineers, architects, attorneys, and other professionals and all court or arbitration or other dispute resolution costs) arising out of or relating to such Work. However, it shall not be Contractor's responsibility to make certain that the Specifications and Drawings are in accordance with Laws and Regulations, but this shall not relieve Contractor of Contractor's obligations under Paragraph 3.03.

C. Changes in Laws or Regulations not known at the time of opening of Bids (or, on the Effective Date of the Agreement if there were no Bids) having an effect on the cost or time of performance of the Work shall be the subject of an adjustment in Contract Price or Contract Times. If Owner and Contractor are unable to agree on entitlement to or on the amount or extent, if any, of any such adjustment, a Claim may be made therefor as provided in Paragraph 10.05.

D. While not intended to be inclusive of all Laws or Regulations for which Contractor may be responsible under paragraph 6.09, the following Laws or Regulations are included as mandated by statute or for the convenience of the Contractor;

Idaho Code Section 63-1501. Definitions. As used in this act, the following terms shall have the following meanings:

"Contracting units" shall include the state or any officer or department thereof, the counties or other subdivisions of the state, and all municipal and quasi-municipal corporations therein.

"Contractor" shall mean any person, firm, co-partnership, association, or corporation, foreign or domestic, entering into a contract for the construction, erection, repair, or improvement of any kind or character of public works in this state.

"Taxes" shall mean all taxes, assessments, excises, and license fees authorized to be levied, assessed, and collected under the laws of this state, other than taxes on real property.

"Taxing unit" shall mean the state or any officer or department thereof, the counties or other subdivisions of the state, and all municipal and quasi-municipal corporations therein authorized by law to assess, levy and collect taxes.

Idaho Code Section 63-1502. Conditions precedent to contract for public works. Before entering into a contract for the construction of any public works in this state, the contracting unit shall require as conditions precedent that the contractor be authorized to do business in this state and that he furnish satisfactory evidence that he has paid or secured to the satisfaction of the respective taxing units all taxes for which he or his property is liable then due or delinquent.

Idaho Code Section 63-1503. Contractor for public works to pay or secure taxes—Agreement. Every contract for the construction of public works by a contracting unit of this state shall contain substantially the following provisions:

The contractor, in consideration of securing the business of erecting or constructing public works in this state, recognizing that the business in which he is engaged is of a transitory character, and that in the pursuit thereof, his property used therein may be without the state when taxes, excises, or license fees to which he is liable become payable, agrees:

1. To pay promptly when due all taxes (other than on real property), excises and license fees due to the state, its subdivisions, and municipal and quasi-municipal corporations therein accrued or accruing during the term of this contract, whether or not the same shall be payable at the end of such term;

2. That if the said taxes, excises, and license fees are not payable at the end of said term, but liability for the payment thereof exists, even though the same constitute liens upon his property, to secure the same to the satisfaction of the respective officers charged with the collection thereof; and

3. That in the event of his default in the payment or securing of such taxes, excises, and license fees, to consent that the department, officer, board, or taxing unit entering into this contract may withhold from any payment due him hereunder the estimated amount of such accrued and accruing taxes, excises, and license fees for the benefit of all taxing units to which said contractor is liable.

Idaho Code Section 44-1002 requires the following: The Contractor must employ ninety-five percent (95%) bona fide Idaho residents as employees on any job under any such contract except where under such contracts fifty (50) or less persons are employed, the Contractor may employ ten percent (10%) nonresidents, provided, however, in all cases employers must give preference to the employment of bona fide residents in the performance of said work, and no contract shall be let to any person, firm, association, or corporation refusing to execute an agreement with the above mentioned provisions in it; provided, that, in contracts involving the expenditure of federal aid funds this act shall not be enforced in such a manner as to conflict with or be contrary to the federal statutes prescribing a labor preference to honorably discharged soldiers, sailors, and marines, prohibiting as unlawful any other preference or discrimination among citizens of the United States.

Idaho Code Chapter 19 of Title 54 requires proper licensing of Public Works Contractors.

6.10 *Taxes*

A. Contractor shall pay all sales, consumer, use, and other similar taxes required to be paid by Contractor in accordance with the Laws and Regulations of the place of the Project which are applicable during the performance of the Work.

B. In the event of the Contractor's default on the payment of taxes, excises, and license fees as set forth in Idaho Code 63-1503 , the Owner shall have the authority to withhold from any payment due the Contractor under this contract, the estimated amount of such accrued and accruing taxes, excises, and license fees for the benefit of all taxing authorities to which said Contractor is liable.

6.11 *Use of Site and Other Areas*

A. *Limitation on Use of Site and Other Areas*

1. Contractor shall confine construction equipment, the storage of materials and equipment, and the operations of workers to the Site and other areas permitted by Laws and Regulations, and shall not unreasonably encumber the Site and other areas with construction equipment or other materials or equipment. Contractor shall assume full responsibility for any damage to any such land or area, or to the owner or occupant thereof, or of any adjacent land or areas resulting from the performance of the Work. Contractor shall not enter upon nor use property not under Owner control until appropriate easements have been executed and a copy is on file at the site.

2. Should any claim be made by any such owner or occupant because of the performance of the Work, Contractor shall promptly settle with such other party by negotiation or otherwise resolve the claim by arbitration or other dispute resolution proceeding or at law.

3. To the fullest extent permitted by Laws and Regulations, Contractor shall indemnify and hold harmless Owner and Engineer, and the officers, directors, members, partners, employees, agents, consultants and subcontractors of each and any of them from and against all claims, costs, losses, and damages (including but not limited to all fees and charges of engineers, architects, attorneys, and other professionals and all court or arbitration or other dispute resolution costs) arising out of or relating to any claim or action, legal or equitable, brought by any such owner or occupant against Owner, Engineer, or any other party indemnified hereunder to the extent caused by or based upon Contractor's performance of the Work.

B. *Removal of Debris During Performance of the Work*: During the progress of the Work Contractor shall keep the Site and other areas free from accumulations of waste materials, rubbish, and other debris. Removal and disposal of such waste materials, rubbish, and other debris shall conform to applicable Laws and Regulations.

C. *Cleaning:* Prior to Substantial Completion of the Work Contractor shall clean the Site and the Work and make it ready for utilization by Owner. At the completion of the Work Contractor shall remove from the Site all tools, appliances, construction equipment and machinery, and surplus materials and shall restore to original condition all property not designated for alteration by the Contract Documents.

D. *Loading Structures:* Contractor shall not load nor permit any part of any structure to be loaded in any manner that will endanger the structure, nor shall Contractor subject any part of the Work or adjacent property to stresses or pressures that will endanger it.

6.12 *Record Documents*

A. Contractor shall maintain in a safe place at the Site one record copy of all Drawings, Specifications, Addenda, Change Orders, Work Change Directives, Field Orders, and written interpretations and clarifications in good order and annotated to show changes made during construction. These record documents together with all approved Samples and a counterpart of all approved Shop Drawings will be available to Engineer for reference. Upon completion of the Work, these record documents, Samples, and Shop Drawings will be delivered to Engineer for Owner.

6.13 *Safety and Protection*

A. Contractor shall be solely responsible for initiating, maintaining and supervising all safety precautions and programs in connection with the Work. Such responsibility does not relieve Subcontractors of their responsibility for the safety of persons or property in the performance of their work, nor for compliance with applicable safety Laws and Regulations. Contractor shall take all necessary precautions for the safety of, and shall provide the necessary protection to prevent damage, injury or loss to:

1. all persons on the Site or who may be affected by the Work;

2. all the Work and materials and equipment to be incorporated therein, whether in storage on or off the Site; and

3. other property at the Site or adjacent thereto, including trees, shrubs, lawns, walks, pavements, roadways, structures, utilities, and Underground Facilities not designated for removal, relocation, or replacement in the course of construction.

B. Contractor shall comply with all applicable Laws and Regulations relating to the safety of persons or property, or to the protection of persons or property from damage, injury, or loss; and shall erect and maintain all necessary safeguards for such safety and protection. Contractor shall notify owners of adjacent property and of Underground Facilities and other utility owners when prosecution of the Work may affect them, and shall cooperate with them in the protection, removal, relocation, and replacement of their property.

C. Contractor shall comply with the applicable requirements of Owner's safety programs, if any. The Supplementary Conditions identify any Owner's safety programs that are applicable to the Work.

D. Contractor shall inform Owner and Engineer of the specific requirements of Contractor's safety program with which Owner's and Engineer's employees and representatives must comply while at the Site.

E. All damage, injury, or loss to any property referred to in Paragraph 6.13.A.2 or 6.13.A.3 caused, directly or indirectly, in whole or in part, by Contractor, any Subcontractor, Supplier, or any other individual or entity directly or indirectly employed by any of them to perform any of the Work, or anyone for whose acts any of them may be liable, shall be remedied by Contractor (except damage or loss attributable to the fault of Drawings or Specifications or to the acts or omissions of Owner or Engineer or anyone employed by any of them, or anyone for whose acts any of them may be liable, and not attributable, directly or indirectly, in whole or in part, to the fault or negligence of Contractor or any Subcontractor, Supplier, or other individual or entity directly or indirectly employed by any of them).

F. Contractor's duties and responsibilities for safety and for protection of the Work shall continue until such time as all the Work is completed and Engineer has issued a notice to Owner and Contractor in accordance with Paragraph 14.07.B that the Work is acceptable (except as otherwise expressly provided in connection with Substantial Completion).

6.14 *Safety Representative*

A. Contractor shall designate a qualified and experienced safety representative at the Site whose duties and responsibilities shall be the prevention of accidents and the maintaining and supervising of safety precautions and programs.

6.15 *Hazard Communication Programs*

A. Contractor shall be responsible for coordinating any exchange of material safety data sheets or other hazard communication information required to be made available to or exchanged between or among employers at the Site in accordance with Laws or Regulations.

6.16 *Emergencies*

A. In emergencies affecting the safety or protection of persons or the Work or property at the Site or adjacent thereto, Contractor is obligated to act to prevent threatened damage, injury, or loss. Contractor shall give Engineer prompt written notice if Contractor believes that any significant changes in the Work or variations from the Contract Documents have been caused thereby or are required as a result thereof. If Engineer determines that a change in the Contract Documents is required because of the action taken by Contractor in response to such an emergency, a Work Change Directive or Change Order will be issued.

6.17 Shop Drawings and Samples

A. Contractor shall submit Shop Drawings and Samples to Engineer for review and approval in accordance with the accepted Schedule of Submittals (as required by Paragraph 2.07). Each submittal will be identified as Engineer may require.

1. *Shop Drawings:*

a. Submit number of copies specified in the General Requirements.

b. Data shown on the Shop Drawings will be complete with respect to quantities, dimensions, specified performance and design criteria, materials, and similar data to show Engineer the services, materials, and equipment Contractor proposes to provide and to enable Engineer to review the information for the limited purposes required by Paragraph 6.17.D.

2. *Samples:*

a. Submit number of Samples specified in the Specifications.

b. Clearly identify each Sample as to material, Supplier, pertinent data such as catalog numbers, the use for which intended and other data as Engineer may require to enable Engineer to review the submittal for the limited purposes required by Paragraph 6.17.D.

B. Where a Shop Drawing or Sample is required by the Contract Documents or the Schedule of Submittals, any related Work performed prior to Engineer's review and approval of the pertinent submittal will be at the sole expense and responsibility of Contractor.

C. *Submittal Procedures:*

1. Before submitting each Shop Drawing or Sample, Contractor shall have:

a. reviewed and coordinated each Shop Drawing or Sample with other Shop Drawings and Samples and with the requirements of the Work and the Contract Documents;

b. determined and verified all field measurements, quantities, dimensions, specified performance and design criteria, installation requirements, materials, catalog numbers, and similar information with respect thereto;

c. determined and verified the suitability of all materials offered with respect to the indicated application, fabrication, shipping, handling, storage, assembly, and installation pertaining to the performance of the Work; and

d. determined and verified all information relative to Contractor's responsibilities for means, methods, techniques, sequences, and procedures of construction, and safety precautions and programs incident thereto.

2. Each submittal shall bear a stamp or specific written certification that Contractor has satisfied Contractor's obligations under the Contract Documents with respect to Contractor's review and approval of that submittal.

3. With each submittal, Contractor shall give Engineer specific written notice of any variations that the Shop Drawing or Sample may have from the requirements of the Contract Documents. This notice shall be both a written communication separate from the Shop Drawings or Sample submittal; and, in addition, by a specific notation made on each Shop Drawing or Sample submitted to Engineer for review and approval of each such variation.

D. *Engineer's Review:*

1. Engineer will provide timely review of Shop Drawings and Samples in accordance with the Schedule of Submittals acceptable to Engineer. Engineer's review and approval will be only to determine if the items covered by the submittals will, after installation or incorporation in the Work, conform to the information given in the Contract Documents and be compatible with the design concept of the completed Project as a functioning whole as indicated by the Contract Documents.

2. Engineer's review and approval will not extend to means, methods, techniques, sequences, or procedures of construction (except where a particular means, method, technique, sequence, or procedure of construction is specifically and expressly called for by the Contract Documents) or to safety precautions or programs incident thereto. The review and approval of a separate item as such will not indicate approval of the assembly in which the item functions.

3. Engineer's review and approval shall not relieve Contractor from responsibility for any variation from the requirements of the Contract Documents unless Contractor has complied with the requirements of Paragraph 6.17.C.3 and Engineer has given written approval of each such variation by specific written notation thereof incorporated in or accompanying the Shop Drawing or Sample. Engineer's review and approval shall not relieve Contractor from responsibility for complying with the requirements of Paragraph 6.17.C.1.

E. *Resubmittal Procedures:*

1. Contractor shall make corrections required by Engineer and shall return the required number of corrected copies of Shop Drawings and submit, as required, new Samples for review and approval. Contractor shall direct specific attention in writing to revisions other than the corrections called for by Engineer on previous submittals.

6.18 *Continuing the Work*

A. Contractor shall carry on the Work and adhere to the Progress Schedule during all disputes or disagreements with Owner. No Work shall be delayed or postponed pending resolution of any disputes or disagreements, except as permitted by Paragraph 15.04 or as Owner and Contractor may otherwise agree in writing.

6.19 *Contractor's General Warranty and Guarantee*

A. Contractor warrants and guarantees to Owner that all Work will be in accordance with the Contract Documents and will not be defective. Engineer and its officers, directors, members, partners, employees, agents, consultants, and subcontractors shall be entitled to rely on representation of Contractor's warranty and guarantee.

B. Contractor's warranty and guarantee hereunder excludes defects or damage caused by:

1. abuse, modification, or improper maintenance or operation by persons other than Contractor, Subcontractors, Suppliers, or any other individual or entity for whom Contractor is responsible; or

2. normal wear and tear under normal usage.

C. Contractor's obligation to perform and complete the Work in accordance with the Contract Documents shall be absolute. None of the following will constitute an acceptance of Work that is not in accordance with the Contract Documents or a release of Contractor's obligation to perform the Work in accordance with the Contract Documents:

1. observations by Engineer;

2. recommendation by Engineer or payment by Owner of any progress or final payment;

3. the issuance of a certificate of Substantial Completion by Engineer or any payment related thereto by Owner;

4. use or occupancy of the Work or any part thereof by Owner;

5. any review and approval of a Shop Drawing or Sample submittal or the issuance of a notice of acceptability by Engineer;

6. any inspection, test, or approval by others; or

7. any correction of defective Work by Owner.

6.20 *Indemnification*

A. To the fullest extent permitted by Laws and Regulations, Contractor shall indemnify and hold harmless Owner and Engineer, and the officers, directors, members, partners, employees, agents, consultants and subcontractors of each and any of them from and against all claims, costs, losses, and damages (including but not limited to all fees and charges of engineers, architects, attorneys, and other professionals and all court or arbitration or other dispute resolution costs) arising out of or relating to the performance of the Work, provided that any such claim, cost, loss, or damage is attributable to bodily injury, sickness, disease, or death, or to injury to or destruction of tangible property (other than the Work itself), including the loss of use resulting therefrom but only to the extent caused by any negligent act or omission of Contractor, any Subcontractor, any Supplier, or any individual or entity directly or indirectly employed by any of them to perform any of the Work or anyone for whose acts any of them may be liable.

B. In any and all claims against Owner or Engineer or any of their officers, directors, members, partners, employees, agents, consultants, or subcontractors by any employee (or the survivor or personal representative of such employee) of Contractor, any Subcontractor, any Supplier, or any individual or entity directly or indirectly employed by any of them to perform any of the Work, or anyone for whose acts any of them may be liable, the indemnification obligation under Paragraph 6.20.A shall not be limited in any way by any limitation on the amount or type of damages, compensation, or benefits payable by or for Contractor or any such Subcontractor, Supplier, or other individual or entity under workers' compensation acts, disability benefit acts, or other employee benefit acts.

C. The indemnification obligations of Contractor under Paragraph 6.20.A shall not extend to the liability of Engineer and Engineer's officers, directors, members, partners, employees, agents, consultants and subcontractors arising out of:

1. the preparation or approval of, or the failure to prepare or approve maps, Drawings, opinions, reports, surveys, Change Orders, designs, or Specifications; or

2. giving directions or instructions, or failing to give them, if that is the primary cause of the injury or damage.

6.21 *Delegation of Professional Design Services*

A. Contractor will not be required to provide professional design services unless such services are specifically required by the Contract Documents for a portion of the Work or unless such services are required to carry out Contractor's responsibilities for construction means, methods, techniques, sequences and procedures. Contractor shall not be required to provide professional services in violation of applicable law.

B. If professional design services or certifications by a design professional related to systems, materials or equipment are specifically required of Contractor by the Contract Documents, Owner and Engineer will specify all performance and design criteria that such services must satisfy. Contractor shall cause such services or certifications to be provided by a properly licensed professional, whose signature and seal shall appear on all drawings, calculations, specifications, certifications, Shop Drawings and other submittals prepared by such professional. Shop Drawings and other submittals related to the Work designed or certified by such professional, if prepared by others, shall bear such professional's written approval when submitted to Engineer.

C. Owner and Engineer shall be entitled to rely upon the adequacy, accuracy and completeness of the services, certifications or approvals performed by such design professionals, provided Owner and Engineer have specified to Contractor all performance and design criteria that such services must satisfy.

D. Pursuant to this Paragraph 6.21, Engineer's review and approval of design calculations and design drawings will be only for the limited purpose of checking for conformance with performance and design criteria given and the design concept expressed in the Contract Documents. Engineer's review and approval of Shop Drawings and other submittals (except design calculations and design drawings) will be only for the purpose stated in Paragraph 6.17.D.1.

E. Contractor shall not be responsible for the adequacy of the performance or design criteria required by the Contract Documents.

6.22 *Quality Control*

A. Contractor shall provide quality control, which shall include the initial and subsequent inspections of Contractor's Work to ensure that the Work conforms to the Contract Documents.

B. Contractor shall designate the person responsible for Contractor's quality control while Work is in progress, and shall notify Engineer, in writing, prior to any change in quality control representative assignment.

ARTICLE 7 – OTHER WORK AT THE SITE

7.01 *Related Work at Site*

A. Owner may perform other work related to the Project at the Site with employees, or through other direct contracts therefor, or have other work performed by utility owners. If such other work is not noted in the Contract Documents, then:

1. written notice thereof will be given to Contractor prior to starting any such other work; and

2. if Owner and Contractor are unable to agree on entitlement to or on the amount or extent, if any, of any adjustment in the Contract Price or Contract Times that should be allowed as a result of such other work, a Claim may be made therefor as provided in Paragraph 10.05.

B. Contractor shall afford each other contractor who is a party to such a direct contract, each utility owner, and Owner, if Owner is performing other work with Owner's employees, proper and safe access to the Site, provide a

reasonable opportunity for the introduction and storage of materials and equipment and the execution of such other work, and properly coordinate the Work with theirs. Contractor shall do all cutting, fitting, and patching of the Work that may be required to properly connect or otherwise make its several parts come together and properly integrate with such other work. Contractor shall not endanger any work of others by cutting, excavating, or otherwise altering such work; provided, however, that Contractor may cut or alter others' work with the written consent of Engineer and the others whose work will be affected. The duties and responsibilities of Contractor under this Paragraph are for the benefit of such utility owners and other contractors to the extent that there are comparable provisions for the benefit of Contractor in said direct contracts between Owner and such utility owners and other contractors.

C. If the proper execution or results of any part of Contractor's Work depends upon work performed by others under this Article 7, Contractor shall inspect such other work and promptly report to Engineer in writing any delays, defects, or deficiencies in such other work that render it unavailable or unsuitable for the proper execution and results of Contractor's Work. Contractor's failure to so report will constitute an acceptance of such other work as fit and proper for integration with Contractor's Work except for latent defects and deficiencies in such other work.

7.02 *Coordination*

A. If Owner intends to contract with others for the performance of other work on the Project at the Site, the following will be set forth in Supplementary Conditions:

1. the individual or entity who will have authority and responsibility for coordination of the activities among the various contractors will be identified;

2. the specific matters to be covered by such authority and responsibility will be itemized; and

3. the extent of such authority and responsibilities will be provided.

B. Unless otherwise provided in the Supplementary Conditions, Owner shall have sole authority and responsibility for such coordination.

7.03 *Legal Relationships*

A. Paragraphs 7.01.A and 7.02 are not applicable for utilities not under the control of Owner.

B. Each other direct contract of Owner under Paragraph 7.01.A shall provide that the other contractor is liable to Owner and Contractor for the reasonable direct delay and disruption costs incurred by Contractor as a result of the other contractor's wrongful actions or inactions.

C. Contractor shall be liable to Owner and any other contractor under direct contract to Owner for the reasonable direct delay and disruption costs incurred by such other contractor as a result of Contractor's wrongful actions or inactions.

ARTICLE 8 – OWNER'S RESPONSIBILITIES

8.01 *Communications to Contractor*

A. Except as otherwise provided in these General Conditions, Owner shall issue all communications to Contractor through Engineer.

8.02 *Replacement of Engineer*

A. In case of termination of the employment of Engineer, Owner shall appoint an engineer to whom Contractor makes no reasonable objection, whose status under the Contract Documents shall be that of the former Engineer.

8.03 *Furnish Data*

A. Owner shall promptly furnish the data required of Owner under the Contract Documents.

8.04 *Pay When Due*

A. Owner shall make payments to Contractor when they are due as provided in Paragraphs 14.02.C and 14.07.C.

8.05 *Lands and Easements; Reports and Tests*

A. Owner's duties with respect to providing lands and easements and providing engineering surveys to establish reference points are set forth in Paragraphs 4.01 and 4.05. Paragraph 4.02 refers to Owner's identifying and making available to Contractor copies of reports of explorations and tests of subsurface conditions and drawings of physical conditions relating to existing surface or subsurface structures at the Site.

8.06 *Insurance*

A. Owner's responsibilities, if any, with respect to purchasing and maintaining liability and property insurance are set forth in Article 5.

8.07 *Change Orders*

A. Owner is obligated to execute Change Orders as indicated in Paragraph 10.03.

8.08 *Inspections, Tests, and Approvals*

A. Owner's responsibility with respect to certain inspections, tests, and approvals is set forth in Paragraph 13.03.B.

8.09 *Limitations on Owner's Responsibilities*

A. The Owner shall not supervise, direct, or have control or authority over, nor be responsible for, Contractor's means, methods, techniques, sequences, or procedures of construction, or the safety precautions and programs incident thereto, or for any failure of Contractor to comply with Laws and Regulations applicable to the performance of the Work. Owner will not be responsible for Contractor's failure to perform the Work in accordance with the Contract Documents.

8.10 *Undisclosed Hazardous Environmental Condition*

A. Owner's responsibility in respect to an undisclosed Hazardous Environmental Condition is set forth in Paragraph 4.06.

8.11 *Evidence of Financial Arrangements*

A. Upon request of Contractor, Owner shall furnish Contractor reasonable evidence that financial arrangements have been made to satisfy Owner's obligations under the Contract Documents.

8.12 *Compliance with Safety Program*

A. While at the Site, Owner's employees and representatives shall comply with the specific applicable requirements of Contractor's safety programs of which Owner has been informed pursuant to Paragraph 6.13.D.

ARTICLE 9 – ENGINEER'S STATUS DURING CONSTRUCTION

9.01 *Owner's Representative*

A. Engineer will be Owner's representative during the construction period. The duties and responsibilities and the limitations of authority of Engineer as Owner's representative during construction are set forth in the Contract Documents.

9.02 *Visits to Site*

A. Engineer will make visits to the Site at intervals appropriate to the various stages of construction as Engineer deems necessary in order to observe as an experienced and qualified design professional the progress that has been made and the quality of the various aspects of Contractor's executed Work. Based on information obtained during such visits and observations, Engineer, for the benefit of Owner, will determine, in general, if the Work is proceeding in accordance with the Contract Documents. Engineer will not be required to make exhaustive or continuous inspections on the Site to check the quality or quantity of the Work. Engineer's efforts will be directed toward providing for Owner a greater degree of confidence that the completed Work will conform generally to the Contract Documents. On the basis of such visits and observations, Engineer will keep Owner informed of the progress of the Work and will endeavor to guard Owner against defective Work.

B. Engineer's visits and observations are subject to all the limitations on Engineer's authority and responsibility set forth in Paragraph 9.09. Particularly, but without limitation, during or as a result of Engineer's visits or observations of Contractor's Work, Engineer will not supervise, direct, control, or have authority over or be responsible for Contractor's means, methods, techniques, sequences, or procedures of construction, or the safety precautions and programs incident thereto, or for any failure of Contractor to comply with Laws and Regulations applicable to the performance of the Work.

9.03 *Project Representative*

A. If Owner and Engineer agree, Engineer will furnish a Resident Project Representative to assist Engineer in providing more extensive observation of the Work. The authority and responsibilities of any such Resident Project Representative and assistants will be as provided in the Supplementary Conditions, and limitations on the responsibilities thereof will be as provided in Paragraph 9.09. If Owner designates another representative or agent to represent Owner at the Site who is not Engineer's consultant, agent or employee, the responsibilities and authority and limitations thereon of such other individual or entity will be as provided in the Supplementary Conditions.

9.04 *Authorized Variations in Work*

A. Engineer may authorize minor variations in the Work from the requirements of the Contract Documents which do not involve an adjustment in the Contract Price or the Contract Times and are compatible with the design concept of the completed Project as a functioning whole as indicated by the Contract Documents. These may be accomplished by a Field Order and will be binding on Owner and also on Contractor, who shall perform the Work involved promptly If Owner or Contractor believes that a Field Order justifies an adjustment in the Contract Price or Contract Times, or both, and the parties are unable to agree on entitlement to or on the amount or extent, if any, of any such adjustment, a Claim may be made therefor as provided in Paragraph 10.05.

9.05 *Rejecting Defective Work*

A. Engineer will have authority to reject Work which Engineer believes to be defective, or that Engineer believes will not produce a completed Project that conforms to the Contract Documents or that will prejudice the integrity of the design concept of the completed Project as a functioning whole as indicated by the Contract Documents. Engineer will also have authority to require special inspection or testing of the Work as provided in Paragraph 13.04, whether or not the Work is fabricated, installed, or completed.

9.06 *Shop Drawings, Change Orders and Payments*

A. In connection with Engineer's authority, and limitations thereof, as to Shop Drawings and Samples, see Paragraph 6.17.

B. In connection with Engineer's authority, and limitations thereof, as to design calculations and design drawings submitted in response to a delegation of professional design services, if any, see Paragraph 6.21.

C. In connection with Engineer's authority as to Change Orders, see Articles 10, 11, and 12.

D. In connection with Engineer's authority as to Applications for Payment, see Article 14.

9.07 *Determinations for Unit Price Work*

A. Engineer will determine the actual quantities and classifications of Unit Price Work performed by Contractor. Engineer will review with Contractor the Engineer's preliminary determinations on such matters before rendering a written decision thereon (by recommendation of an Application for Payment or otherwise). Engineer's written decision thereon will be final and binding (except as modified by Engineer to reflect changed factual conditions or more accurate data) upon Owner and Contractor, subject to the provisions of Paragraph 10.05.

9.08 *Decisions on Requirements of Contract Documents and Acceptability of Work*

A. Engineer will be the initial interpreter of the requirements of the Contract Documents and judge of the acceptability of the Work thereunder. All matters in question and other matters between Owner and Contractor arising prior to the date final payment is due relating to the acceptability of the Work, and the interpretation of the requirements of the Contract Documents pertaining to the performance of the Work, will be referred initially to Engineer in writing within 30 days of the event giving rise to the question.

B. Engineer will, with reasonable promptness, render a written decision on the issue referred. If Owner or Contractor believes that any such decision entitles them to an adjustment in the Contract Price or Contract Times or both, a Claim may be made under Paragraph 10.05. The date of Engineer's decision shall be the date of the event giving rise to the issues referenced for the purposes of Paragraph 10.05.B.

C. Engineer's written decision on the issue referred will be final and binding on Owner and Contractor, subject to the provisions of Paragraph 10.05.

D. When functioning as interpreter and judge under this Paragraph 9.08, Engineer will not show partiality to Owner or Contractor and will not be liable in connection with any interpretation or decision rendered in good faith in such capacity.

9.09 *Limitations on Engineer's Authority and Responsibilities*

A. Neither Engineer's authority or responsibility under this Article 9 or under any other provision of the Contract Documents nor any decision made by Engineer in good faith either to exercise or not exercise such authority or responsibility or the undertaking, exercise, or performance of any authority or responsibility by Engineer shall create, impose, or give rise to any duty in contract, tort, or otherwise owed by Engineer to Contractor, any Subcontractor, any Supplier, any other individual or entity, or to any surety for or employee or agent of any of them.

B. Engineer will not supervise, direct, control, or have authority over or be responsible for Contractor's means, methods, techniques, sequences, or procedures of construction, or the safety precautions and programs incident thereto, or for any failure of Contractor to comply with Laws and Regulations applicable to the performance of the Work. Engineer will not be responsible for Contractor's failure to perform the Work in accordance with the Contract Documents.

C. Engineer will not be responsible for the acts or omissions of Contractor or of any Subcontractor, any Supplier, or of any other individual or entity performing any of the Work.

D. Engineer's review of the final Application for Payment and accompanying documentation and all maintenance and operating instructions, schedules, guarantees, bonds, certificates of inspection, tests and approvals, and other documentation required to be delivered by Paragraph 14.07.A will only be to determine generally that their content complies with the requirements of, and in the case of certificates of inspections, tests, and approvals that the results certified indicate compliance with, the Contract Documents.

E. The limitations upon authority and responsibility set forth in this Paragraph 9.09 shall also apply to the Resident Project Representative, if any, and assistants, if any.

F. Contractors, Subcontractors, Suppliers and others on the Project, or their sureties, shall maintain no direct action against the Engineer, its officers, employees, affiliated corporations, and subcontractors, for any claim arising out of, in connection with, or resulting from the engineering services performed. Only the Owner will be the beneficiary of any undertaking by the Engineer.

9.10 *Compliance with Safety Program*

A. While at the Site, Engineer's employees and representatives shall comply with the specific applicable requirements of Contractor's safety programs of which Engineer has been informed pursuant to Paragraph 6.13.D.

ARTICLE 10 – CHANGES IN THE WORK; CLAIMS

10.01 *Authorized Changes in the Work*

A. Without invalidating the Contract and without notice to any surety, Owner may, at any time or from time to time, order additions, deletions, or revisions in the Work by a Change Order, or a Work Change Directive. Upon receipt of any such document, Contractor shall promptly proceed with the Work involved which will be performed under the applicable conditions of the Contract Documents (except as otherwise specifically provided).

B. If Owner and Contractor are unable to agree on entitlement to, or on the amount or extent, if any, of an adjustment in the Contract Price or Contract Times, or both, that should be allowed as a result of a Work Change Directive, a Claim may be made therefor as provided in Paragraph 10.05.

10.02 *Unauthorized Changes in the Work*

A. Contractor shall not be entitled to an increase in the Contract Price or an extension of the Contract Times with respect to any work performed that is not required by the Contract Documents as amended, modified, or supplemented as provided in Paragraph 3.04, except in the case of an emergency as provided in Paragraph 6.16 or in the case of uncovering Work as provided in Paragraph 13.04.D.

10.03 *Execution of Change Orders*

A. Owner and Contractor shall execute appropriate Change Orders recommended by Engineer covering:

1. changes in the Work which are: (i) ordered by Owner pursuant to Paragraph 10.01.A, (ii) required because of acceptance of defective Work under Paragraph 13.08.A or Owner's correction of defective Work under Paragraph 13.09, or (iii) agreed to by the parties;

2. changes in the Contract Price or Contract Times which are agreed to by the parties, including any undisputed sum or amount of time for Work actually performed in accordance with a Work Change Directive; and

3. changes in the Contract Price or Contract Times which embody the substance of any written decision rendered by Engineer pursuant to Paragraph 10.05; provided that, in lieu of executing any such Change Order, an appeal may be taken from any such decision in accordance with the provisions of the Contract Documents and applicable Laws and Regulations, but during any such appeal, Contractor shall carry on the Work and adhere to the Progress Schedule as provided in Paragraph 6.18.A.

10.04 *Notification to Surety*

A. If the provisions of any bond require notice to be given to a surety of any change affecting the general scope of the Work or the provisions of the Contract Documents (including, but not limited to, Contract Price or Contract Times), the giving of any such notice will be Contractor's responsibility. The amount of each applicable bond will be adjusted to reflect the effect of any such change.

10.05 *Claims*

A. *Engineer's Decision Required*: All Claims, except those waived pursuant to Paragraph 14.09, shall be referred to the Engineer for decision. A decision by Engineer shall be required as a condition precedent to any exercise by Owner or Contractor of any rights or remedies either may otherwise have under the Contract Documents or by Laws and Regulations in respect of such Claims.

B. *Notice:* Written notice stating the general nature of each Claim shall be delivered by the claimant to Engineer and the other party to the Contract promptly (but in no event later than ~~30~~ 10 days) after the start of the event giving rise thereto. The responsibility to substantiate a Claim shall rest with the party making the Claim. Notice of the amount or extent of the Claim, with supporting data shall be delivered to the Engineer and the other party to the Contract within ~~60~~ 20 days after the start of such event (unless Engineer allows additional time for claimant to submit additional or more accurate data in support of such Claim). A Claim for an adjustment in Contract Price shall be prepared in accordance with the provisions of Paragraph 12.01.B. A Claim for an adjustment in Contract Times shall be prepared in accordance with the provisions of Paragraph 12.02.B. Each Claim shall be accompanied by claimant's written statement that the adjustment claimed is the entire adjustment to which the claimant believes it is entitled as a result of said event. The opposing party shall submit any response to Engineer and the claimant within ~~30~~ 10 days after receipt of the claimant's last submittal (unless Engineer allows additional time).

C. *Engineer's Action*: Engineer will review each Claim and, within ~~30~~ 20 days after receipt of the last submittal of the claimant or the last submittal of the opposing party, if any, take one of the following actions in writing:

1. deny the Claim in whole or in part;

2. approve the Claim; or

3. notify the parties that the Engineer is unable to resolve the Claim if, in the Engineer's sole discretion, it would be inappropriate for the Engineer to do so. For purposes of further resolution of the Claim, such notice shall be deemed a denial.

D. In the event that Engineer does not take action on a Claim within said ~~30~~ 21 days, the Claim shall be deemed denied.

E. Engineer's written action under Paragraph 10.05.C or denial pursuant to Paragraphs 10.05.C.3 or 10.05.D will be final and binding upon Owner and Contractor, unless Owner or Contractor invoke the dispute resolution procedure set forth in Article 16 within 30 days of such action or denial.

F. No Claim for an adjustment in Contract Price or Contract Times will be valid if not submitted in accordance with this Paragraph 10.05.

ARTICLE 11 – COST OF THE WORK; ALLOWANCES; UNIT PRICE WORK

11.01 *Cost of the Work*

A. *Costs Included:* The term Cost of the Work means the sum of all costs, except those excluded in Paragraph 11.01.B, necessarily incurred and paid by Contractor in the proper performance of the Work. When the value of any Work covered by a Change Order or when a Claim for an adjustment in Contract Price is determined on the basis of Cost of the Work, the costs to be reimbursed to Contractor will be only those additional or incremental costs required because of the change in the Work or because of the event giving rise to the Claim. Except as otherwise may be agreed to in writing by Owner, such costs shall be in amounts no higher than those prevailing in the locality

of the Project, shall not include any of the costs itemized in Paragraph 11.01.B, and shall include only the following items:

1. Payroll costs for employees in the direct employ of Contractor in the performance of the Work under schedules of job classifications agreed upon by Owner and Contractor. Such employees shall include, without limitation, superintendents, foremen, and other personnel employed full time on the Work. Payroll costs for employees not employed full time on the Work shall be apportioned on the basis of their time spent on the Work. Payroll costs shall include, but not be limited to, salaries and wages plus the cost of fringe benefits, which shall include social security contributions, unemployment, excise, and payroll taxes, workers' compensation, health and retirement benefits, bonuses, sick leave, vacation and holiday pay applicable thereto. The expenses of performing Work outside of regular working hours, on Saturday, Sunday, or legal holidays, shall be included in the above to the extent authorized by Owner.

2. Cost of all materials and equipment furnished and incorporated in the Work, including costs of transportation and storage thereof, and Suppliers' field services required in connection therewith. All cash discounts shall accrue to Contractor unless Owner deposits funds with Contractor with which to make payments, in which case the cash discounts shall accrue to Owner. All trade discounts, rebates and refunds and returns from sale of surplus materials and equipment shall accrue to Owner, and Contractor shall make provisions so that they may be obtained.

3. Payments made by Contractor to Subcontractors for Work performed by Subcontractors. If required by Owner, Contractor shall obtain competitive bids from subcontractors acceptable to Owner and Contractor and shall deliver such bids to Owner, who will then determine, with the advice of Engineer, which bids, if any, will be acceptable. If any subcontract provides that the Subcontractor is to be paid on the basis of Cost of the Work plus a fee, the Subcontractor's Cost of the Work and fee shall be determined in the same manner as Contractor's Cost of the Work and fee as provided in this Paragraph 11.01.

4. Costs of special consultants (including but not limited to engineers, architects, testing laboratories, surveyors, attorneys, and accountants) employed for services specifically related to the Work.

5. Supplemental costs including the following:

    a. The proportion of necessary transportation, travel, and subsistence expenses of Contractor's employees incurred in discharge of duties connected with the Work.

    b. Cost, including transportation and maintenance, of all materials, supplies, equipment, machinery, appliances, office, and temporary facilities at the Site, and hand tools not owned by the workers, which are consumed in the performance of the Work, and cost, less market value, of such items used but not consumed which remain the property of Contractor.

    c. Rentals of all construction equipment and machinery, and the parts thereof whether rented from Contractor or others in accordance with rental agreements approved by Owner with the advice of Engineer, and the costs of transportation, loading, unloading, assembly, dismantling, and removal thereof. All such costs shall be in accordance with the terms of said rental agreements. The rental of any such equipment, machinery, or parts shall cease when the use thereof is no longer necessary for the Work.

    d. Sales, consumer, use, and other similar taxes related to the Work, and for which Contractor is liable, as imposed by Laws and Regulations.

    e. Deposits lost for causes other than negligence of Contractor, any Subcontractor, or anyone directly or indirectly employed by any of them or for whose acts any of them may be liable, and royalty payments and fees for permits and licenses.

    f. Losses and damages (and related expenses) caused by damage to the Work, not compensated by insurance or otherwise, sustained by Contractor in connection with the performance of the Work (except losses and damages within the deductible amounts of property insurance established in

accordance with Paragraph 5.06.D), provided such losses and damages have resulted from causes other than the negligence of Contractor, any Subcontractor, or anyone directly or indirectly employed by any of them or for whose acts any of them may be liable. Such losses shall include settlements made with the written consent and approval of Owner. No such losses, damages, and expenses shall be included in the Cost of the Work for the purpose of determining Contractor's fee.

g. The cost of utilities, fuel, and sanitary facilities at the Site.

h. Minor expenses such as telegrams, long distance telephone calls, telephone service at the Site, express and courier services, and similar petty cash items in connection with the Work.

i. The costs of premiums for all bonds and insurance Contractor is required by the Contract Documents to purchase and maintain.

B. *Costs Excluded:* The term Cost of the Work shall not include any of the following items:

1. Payroll costs and other compensation of Contractor's officers, executives, principals (of partnerships and sole proprietorships), general managers, safety managers, engineers, architects, estimators, attorneys, auditors, accountants, purchasing and contracting agents, expediters, timekeepers, clerks, and other personnel employed by Contractor, whether at the Site or in Contractor's principal or branch office for general administration of the Work and not specifically included in the agreed upon schedule of job classifications referred to in Paragraph 11.01.A.1 or specifically covered by Paragraph 11.01.A.4, all of which are to be considered administrative costs covered by the Contractor's fee.

2. Expenses of Contractor's principal and branch offices other than Contractor's office at the Site.

3. Any part of Contractor's capital expenses, including interest on Contractor's capital employed for the Work and charges against Contractor for delinquent payments.

4. Costs due to the negligence of Contractor, any Subcontractor, or anyone directly or indirectly employed by any of them or for whose acts any of them may be liable, including but not limited to, the correction of defective Work, disposal of materials or equipment wrongly supplied, and making good any damage to property.

5. Other overhead or general expense costs of any kind and the costs of any item not specifically and expressly included in Paragraphs 11.01.A.

C. *Contractor's Fee:* When all the Work is performed on the basis of cost-plus, Contractor's fee shall be determined as set forth in the Agreement. When the value of any Work covered by a Change Order or when a Claim for an adjustment in Contract Price is determined on the basis of Cost of the Work, Contractor's fee shall be determined as set forth in Paragraph 12.01.C.

D. *Documentation:* Whenever the Cost of the Work for any purpose is to be determined pursuant to Paragraphs 11.01.A and 11.01.B, Contractor will establish and maintain records thereof in accordance with generally accepted accounting practices and submit in a form acceptable to Engineer an itemized cost breakdown together with supporting data.

11.02 *Allowances*

A. It is understood that Contractor has included in the Contract Price all allowances so named in the Contract Documents and shall cause the Work so covered to be performed for such sums and by such persons or entities as may be acceptable to Owner and Engineer.

B. *Cash Allowances:*

1. Contractor agrees that:

a. the cash allowances include the cost to Contractor (less any applicable trade discounts) of materials and equipment required by the allowances to be delivered at the Site, and all applicable taxes; and

b. Contractor's costs for unloading and handling on the Site, labor, installation, overhead, profit, and other expenses contemplated for the cash allowances have been included in the Contract Price and not in the allowances, and no demand for additional payment on account of any of the foregoing will be valid.

C. *Contingency Allowance:*

1. Contractor agrees that a contingency allowance, if any, is for the sole use of Owner to cover unanticipated costs.

D. Prior to final payment, an appropriate Change Order will be issued as recommended by Engineer to reflect actual amounts due Contractor on account of Work covered by allowances, and the Contract Price shall be correspondingly adjusted.

11.03 *Unit Price Work*

A. Where the Contract Documents provide that all or part of the Work is to be Unit Price Work, initially the Contract Price will be deemed to include for all Unit Price Work an amount equal to the sum of the unit price for each separately identified item of Unit Price Work times the estimated quantity of each item as indicated in the Agreement.

B. The estimated quantities of items of Unit Price Work are not guaranteed and are solely for the purpose of comparison of Bids and determining an initial Contract Price. Determinations of the actual quantities and classifications of Unit Price Work performed by Contractor will be made by Engineer subject to the provisions of Paragraph 9.07.

C. Each unit price will be deemed to include an amount considered by Contractor to be adequate to cover Contractor's overhead and profit for each separately identified item.

D. Owner or Contractor may make a Claim for an adjustment in the Contract Price in accordance with Paragraph 10.05 if:

1. the quantity of any item of Unit Price Work performed by Contractor differs materially and significantly from the estimated quantity of such item indicated in the Agreement; and

2. there is no corresponding adjustment with respect to any other item of Work; and

3. Contractor believes that Contractor is entitled to an increase in Contract Price as a result of having incurred additional expense or Owner believes that Owner is entitled to a decrease in Contract Price and the parties are unable to agree as to the amount of any such increase or decrease.

ARTICLE 12 – CHANGE OF CONTRACT PRICE; CHANGE OF CONTRACT TIMES

12.01 *Change of Contract Price*

A. The Contract Price may only be changed by a Change Order. Any Claim for an adjustment in the Contract Price shall be based on written notice submitted by the party making the Claim to the Engineer and the other party to the Contract in accordance with the provisions of Paragraph 10.05.

B. The value of any Work covered by a Change Order or of any Claim for an adjustment in the Contract Price will be determined as follows:

1. where the Work involved is covered by unit prices contained in the Contract Documents, by application of such unit prices to the quantities of the items involved (subject to the provisions of Paragraph 11.03); or

2. where the Work involved is not covered by unit prices contained in the Contract Documents, by a mutually agreed lump sum (which may include an allowance for overhead and profit not necessarily in accordance with Paragraph 12.01.C.2); or

3. where the Work involved is not covered by unit prices contained in the Contract Documents and agreement to a lump sum is not reached under Paragraph 12.01.B.2, on the basis of the Cost of the Work (determined as provided in Paragraph 11.01) plus a Contractor's fee for overhead and profit (determined as provided in paragraph 12.01.C).

C. *Contractor's Fee:* The Contractor's fee for overhead and profit shall be determined as follows:

1. a mutually acceptable fixed fee; or

2. if a fixed fee is not agreed upon, then a fee based on the following percentages of the various portions of the Cost of the Work:

a. for costs incurred under Paragraphs 11.01.A.1 and 11.01.A.2, the Contractor's fee shall be 15 percent;

b. for costs incurred under Paragraph 11.01.A.3, the Contractor's fee shall be five percent;

c. where one or more tiers of subcontracts are on the basis of Cost of the Work plus a fee and no fixed fee is agreed upon, the intent of Paragraphs 12.01.C.2.a and 12.01.C.2.b is that the Subcontractor who actually performs the Work, at whatever tier, will be paid a fee of 15 percent of the costs incurred by such Subcontractor under Paragraphs 11.01.A.1 and 11.01.A.2 and that any higher tier Subcontractor and Contractor will each be paid a fee of five percent of the amount paid to the next lower tier Subcontractor;

d. no fee shall be payable on the basis of costs itemized under Paragraphs 11.01.A.4, 11.01.A.5, and 11.01.B;

e. the amount of credit to be allowed by Contractor to Owner for any change which results in a net decrease in cost will be the amount of the actual net decrease in cost plus a deduction in Contractor's fee by an amount equal to five percent of such net decrease; and

f. when both additions and credits are involved in any one change, the adjustment in Contractor's fee shall be computed on the basis of the net change in accordance with Paragraphs 12.01.C.2.a through 12.01.C.2.e, inclusive.

12.02 *Change of Contract Times*

A. The Contract Times may only be changed by a Change Order. Any Claim for an adjustment in the Contract Times shall be based on written notice submitted by the party making the claim to the Engineer and the other party to the Contract in accordance with the provisions of paragraph 10.05.

B. Any adjustment of the Contract Times covered by a Change Order or any Claim for an adjustment in the Contract Times will be determined in accordance with the provisions of this Article 12.

12.03 *Delays*

A. Where Contractor is prevented from completing any part of the Work within the Contract Times due to delay beyond the control of Contractor, the Contract Times will be extended in an amount equal to the time lost due to such delay if a Claim is made therefor as provided in Paragraph 12.02.A. Delays beyond the control of Contractor shall include, but not be limited to, acts or neglect by Owner, acts or neglect of utility owners or other contractors performing other work as contemplated by Article 7, fires, floods, epidemics, abnormal weather conditions, or acts of God.

B. If Owner, Engineer, or other contractors or utility owners performing other work for Owner as contemplated by Article 7, or anyone for whom Owner is responsible, delays, disrupts, or interferes with the performance or progress of the Work, then Contractor shall be entitled to an equitable adjustment in the Contract Price or the Contract Times, or both. Contractor's entitlement to an adjustment of the Contract Times is conditioned on such adjustment being essential to Contractor's ability to complete the Work within the Contract Times.

C. If Contractor is delayed in the performance or progress of the Work by fire, flood, epidemic, abnormal weather conditions, acts of God, acts or failures to act of utility owners not under the control of Owner, or other causes not the fault of and beyond control of Owner and Contractor, then Contractor shall be entitled to an equitable adjustment in Contract Times, if such adjustment is essential to Contractor's ability to complete the Work within the Contract Times. Such an adjustment shall be Contractor's sole and exclusive remedy for the delays described in this Paragraph 12.03.C.

D. Owner, Engineer, and their officers, directors, members, partners, employees, agents, consultants, or subcontractors shall not be liable to Contractor for any claims, costs, losses, or damages (including but not limited to all fees and charges of engineers, architects, attorneys, and other professionals and all court or arbitration or other dispute resolution costs) sustained by Contractor on or in connection with any other project or anticipated project.

E. Contractor shall not be entitled to an adjustment in Contract Price or Contract Times for delays within the control of Contractor. Delays attributable to and within the control of a Subcontractor or Supplier shall be deemed to be delays within the control of Contractor.

ARTICLE 13 – TESTS AND INSPECTIONS; CORRECTION, REMOVAL OR ACCEPTANCE OF DEFECTIVE WORK

13.01 *Notice of Defects*

A. Prompt notice of all defective Work of which Owner or Engineer has actual knowledge will be given to Contractor. All defective Work may be rejected, corrected, or accepted as provided in this Article 13.

13.02 *Access to Work*

A. Owner, Engineer, their consultants and other representatives and personnel of Owner, independent testing laboratories, and governmental agencies with jurisdictional interests will have access to the Site and the Work at reasonable times for their observation, inspection, and testing. Contractor shall provide them proper and safe conditions for such access and advise them of Contractor's safety procedures and programs so that they may comply therewith as applicable.

13.03 *Tests and Inspections*

A. Contractor shall give Engineer timely notice of readiness of the Work for all required inspections, tests, or approvals and shall cooperate with inspection and testing personnel to facilitate required inspections or tests.

B. ~~Owner shall employ and pay for the services of an independent testing laboratory to perform all inspections, tests, or approvals required by the Contract Documents except:~~ Contractor shall employ an independent testing laboratory or testing agency and shall be responsible for arranging and shall pay for all specified tests, inspections, and approvals (including tests, inspections, and approvals to be paid for on a cash allowance basis) required for Owner's and Engineer's acceptance of the Work at the site except:

1. ~~for inspections, tests, or approvals covered by paragraphs 13.03.C and 13.03.D below;~~ costs incurred in connection with tests or inspections pursuant to paragraph 13.04.B of the General Conditions shall be paid for as provided in said paragraph; and as otherwise specifically provided in the Contract Documents.

2. ~~that costs incurred in connection with tests or inspections conducted pursuant to paragraph 13.04.B shall be paid as provided in said paragraph 13.04.C; and~~.

~~3. as otherwise specifically provided in the Contract Documents.~~

C. If Laws or Regulations of any public body having jurisdiction require any Work (or part thereof) specifically to be inspected, tested, or approved by an employee or other representative of such public body, Contractor shall assume full responsibility for arranging and obtaining such inspections, tests, or approvals, pay all costs in connection therewith, and furnish Engineer the required certificates of inspection or approval.

D. Contractor shall be responsible for arranging and obtaining and shall pay all costs in connection with any inspections, tests, or approvals required for Owner's and Engineer's acceptance of materials or equipment to be incorporated in the Work; or acceptance of materials, mix designs, or equipment submitted for approval prior to Contractor's purchase thereof for incorporation in the Work. Such inspections, tests, or approvals shall be performed by organizations acceptable to Owner and Engineer.

E. If any Work (or the work of others) that is to be inspected, tested, or approved is covered by Contractor without written concurrence of Engineer, it must, if requested by Engineer, be uncovered for observation.

F. Uncovering Work as provided in paragraph 13.03.E shall be at Contractor's expense unless Contractor has given Engineer timely notice of Contractor's intention to cover the same and Engineer has not acted with reasonable promptness in response to such notice.

13.04 *Uncovering Work*

A. If any Work is covered contrary to the written request of Engineer, it must, if requested by Engineer, be uncovered for Engineer's observation and replaced at Contractor's expense.

B. If Engineer considers it necessary or advisable that covered Work be observed by Engineer or inspected or tested by others, Contractor, at Engineer's request, shall uncover, expose, or otherwise make available for observation, inspection, or testing as Engineer may require, that portion of the Work in question, furnishing all necessary labor, material, and equipment.

C. If it is found that the uncovered Work is defective, Contractor shall pay all claims, costs, losses, and damages (including but not limited to all fees and charges of engineers, architects, attorneys, and other professionals and all court or arbitration or other dispute resolution costs) arising out of or relating to such uncovering, exposure, observation, inspection, and testing, and of satisfactory replacement or reconstruction (including but not limited to all costs of repair or replacement of work of others); and Owner shall be entitled to an appropriate decrease in the Contract Price. If the parties are unable to agree as to the amount thereof, Owner may make a Claim therefor as provided in Paragraph 10.05.

D. If, the uncovered Work is not found to be defective, Contractor shall be allowed an increase in the Contract Price or an extension of the Contract Times, or both, directly attributable to such uncovering, exposure, observation, inspection, testing, replacement, and reconstruction. If the parties are unable to agree as to the amount or extent thereof, Contractor may make a Claim therefor as provided in Paragraph 10.05.

13.05 *Owner May Stop the Work*

A. If the Work is defective, or Contractor fails to supply sufficient skilled workers or suitable materials or equipment, or fails to perform the Work in such a way that the completed Work will conform to the Contract Documents, Owner may order Contractor to stop the Work, or any portion thereof, until the cause for such order has been eliminated; however, this right of Owner to stop the Work shall not give rise to any duty on the part of Owner to exercise this right for the benefit of Contractor, any Subcontractor, any Supplier, any other individual or entity, or any surety for, or employee or agent of any of them.

13.06 *Correction or Removal of Defective Work*

A. Promptly after receipt of written notice, Contractor shall correct all defective Work, whether or not fabricated, installed, or completed, or, if the Work has been rejected by Engineer, remove it from the Project and replace it with Work that is not defective. Contractor shall pay all claims, costs, losses, and damages (including but not

limited to all fees and charges of engineers, architects, attorneys, and other professionals and all court or arbitration or other dispute resolution costs) arising out of or relating to such correction or removal (including but not limited to all costs of repair or replacement of work of others).

B. When correcting defective Work under the terms of this Paragraph 13.06 or Paragraph 13.07, Contractor shall take no action that would void or otherwise impair Owner's warranty, special warranty and guarantee, if any, on said Work.

13.07 *Correction Period*

A. If within one year after the date of Substantial Completion (or such longer period of time as may be prescribed by the terms of any applicable special guarantee required by the Contract Documents) or by any specific provision of the Contract Documents, any Work is found to be defective, or if the repair of any damages to the land or areas made available for Contractor's use by Owner or permitted by Laws and Regulations as contemplated in Paragraph 6.11.A is found to be defective, Contractor shall promptly, without cost to Owner and in accordance with Owner's written instructions:

1. repair such defective land or areas; or

2. correct such defective Work; or

3. if the defective Work has been rejected by Owner, remove it from the Project and replace it with Work that is not defective, and

4. satisfactorily correct or repair or remove and replace any damage to other Work, to the work of others or other land or areas resulting therefrom.

B. If Contractor does not promptly comply with the terms of Owner's written instructions, or in an emergency where delay would cause serious risk of loss or damage, Owner may have the defective Work corrected or repaired or may have the rejected Work removed and replaced. All claims, costs, losses, and damages (including but not limited to all fees and charges of engineers, architects, attorneys, and other professionals and all court or arbitration or other dispute resolution costs) arising out of or relating to such correction or repair or such removal and replacement (including but not limited to all costs of repair or replacement of work of others) will be paid by Contractor.

C. In special circumstances where a particular item of equipment is placed in continuous service before Substantial Completion of all the Work, the correction period for that item may start to run from an earlier date if so provided in the Specifications.

D. Where defective Work (and damage to other Work resulting therefrom) has been corrected or removed and replaced under this Paragraph 13.07, the correction period hereunder with respect to such Work will be extended for an additional period of one year after such correction or removal and replacement has been satisfactorily completed.

E. Contractor's obligations under this Paragraph 13.07 are in addition to any other obligation or warranty. The provisions of this Paragraph 13.07 shall not be construed as a substitute for, or a waiver of, the provisions of any applicable statute of limitation or repose.

13.08 *Acceptance of Defective Work*

A. If, instead of requiring correction or removal and replacement of defective Work, Owner (and, prior to Engineer's recommendation of final payment, Engineer) prefers to accept it, Owner may do so. Contractor shall pay all claims, costs, losses, and damages (including but not limited to all fees and charges of engineers, architects, attorneys, and other professionals and all court or arbitration or other dispute resolution costs) attributable to Owner's evaluation of and determination to accept such defective Work (such costs to be approved by Engineer as to reasonableness) and for the diminished value of the Work to the extent not otherwise paid by Contractor pursuant to this sentence. If any such acceptance occurs prior to Engineer's recommendation of final payment, a Change Order will be issued incorporating the necessary revisions in the Contract Documents with respect to the Work, and Owner shall be

entitled to an appropriate decrease in the Contract Price, reflecting the diminished value of Work so accepted. If the parties are unable to agree as to the amount thereof, Owner may make a Claim therefor as provided in Paragraph 10.05. If the acceptance occurs after such recommendation, an appropriate amount will be paid by Contractor to Owner.

13.09 *Owner May Correct Defective Work*

A. If Contractor fails within a reasonable time after written notice from Engineer to correct defective Work, or to remove and replace rejected Work as required by Engineer in accordance with Paragraph 13.06.A, or if Contractor fails to perform the Work in accordance with the Contract Documents, or if Contractor fails to comply with any other provision of the Contract Documents, Owner may, after seven days written notice to Contractor, correct, or remedy any such deficiency.

B. In exercising the rights and remedies under this Paragraph 13.09, Owner shall proceed expeditiously. In connection with such corrective or remedial action, Owner may exclude Contractor from all or part of the Site, take possession of all or part of the Work and suspend Contractor's services related thereto, take possession of Contractor's tools, appliances, construction equipment and machinery at the Site, and incorporate in the Work all materials and equipment stored at the Site or for which Owner has paid Contractor but which are stored elsewhere. Contractor shall allow Owner, Owner's representatives, agents and employees, Owner's other contractors, and Engineer and Engineer's consultants access to the Site to enable Owner to exercise the rights and remedies under this Paragraph.

C. All claims, costs, losses, and damages (including but not limited to all fees and charges of engineers, architects, attorneys, and other professionals and all court or arbitration or other dispute resolution costs) incurred or sustained by Owner in exercising the rights and remedies under this Paragraph 13.09 will be charged against Contractor, and a Change Order will be issued incorporating the necessary revisions in the Contract Documents with respect to the Work; and Owner shall be entitled to an appropriate decrease in the Contract Price. If the parties are unable to agree as to the amount of the adjustment, Owner may make a Claim therefor as provided in Paragraph 10.05. Such claims, costs, losses and damages will include but not be limited to all costs of repair, or replacement of work of others destroyed or damaged by correction, removal, or replacement of Contractor's defective Work.

D. Contractor shall not be allowed an extension of the Contract Times because of any delay in the performance of the Work attributable to the exercise by Owner of Owner's rights and remedies under this Paragraph 13.09.

ARTICLE 14 – PAYMENTS TO CONTRACTOR AND COMPLETION

14.01 Schedule of Values

A. The Schedule of Values established as provided in Paragraph 2.07.A will serve as the basis for progress payments and will be incorporated into a form of Application for Payment acceptable to Engineer. Progress payments on account of Unit Price Work will be based on the number of units completed.

14.02 *Progress Payments*

A. *Applications for Payments:*

1. At least 20 days before the date established in the Agreement for each progress payment (but not more often than once a month), Contractor shall submit to Engineer for review an Application for Payment filled out and signed by Contractor covering the Work completed as of the date of the Application and accompanied by such supporting documentation as is required by the Contract Documents. If payment is requested on the basis of materials and equipment not incorporated in the Work but delivered and suitably stored at the Site or at another location agreed to in writing, the Application for Payment shall also be accompanied by a bill of sale, invoice, or other documentation warranting that Owner has received the materials and equipment free and clear of all Liens and evidence that the materials and equipment are covered by appropriate property insurance or other arrangements to protect Owner's interest therein, all of which must be satisfactory to Owner.

2. Beginning with the second Application for Payment, each Application shall include an affidavit of Contractor stating that all previous progress payments received on account of the Work have been applied on account to discharge Contractor's legitimate obligations associated with prior Applications for Payment.

3. The amount of retainage with respect to progress payments will be as stipulated in the Agreement.

B. *Review of Applications:*

1. Engineer will, within 7 ~~10~~ days after receipt of each Application for Payment, either indicate in writing a recommendation of payment and present the Application to Owner or return the Application to Contractor indicating in writing Engineer's reasons for refusing to recommend payment. In the latter case, Contractor may make the necessary corrections and resubmit the Application.

2. Engineer's recommendation of any payment requested in an Application for Payment will constitute a representation by Engineer to Owner, based on Engineer's observations of the executed Work as an experienced and qualified design professional, and on Engineer's review of the Application for Payment and the accompanying data and schedules, that to the best of Engineer's knowledge, information and belief:

   a. the Work has progressed to the point indicated;

   b. the quality of the Work is generally in accordance with the Contract Documents (subject to an evaluation of the Work as a functioning whole prior to or upon Substantial Completion, the results of any subsequent tests called for in the Contract Documents, a final determination of quantities and classifications for Unit Price Work under Paragraph 9.07, and any other qualifications stated in the recommendation); and

   c. the conditions precedent to Contractor's being entitled to such payment appear to have been fulfilled in so far as it is Engineer's responsibility to observe the Work.

3. By recommending any such payment Engineer will not thereby be deemed to have represented that:

   a. inspections made to check the quality or the quantity of the Work as it has been performed have been exhaustive, extended to every aspect of the Work in progress, or involved detailed inspections of the Work beyond the responsibilities specifically assigned to Engineer in the Contract Documents; or

   b. there may not be other matters or issues between the parties that might entitle Contractor to be paid additionally by Owner or entitle Owner to withhold payment to Contractor.

4. Neither Engineer's review of Contractor's Work for the purposes of recommending payments nor Engineer's recommendation of any payment, including final payment, will impose responsibility on Engineer:

   a. to supervise, direct, or control the Work, or

   b. for the means, methods, techniques, sequences, or procedures of construction, or the safety precautions and programs incident thereto, or

   c. for Contractor's failure to comply with Laws and Regulations applicable to Contractor's performance of the Work, or

   d. to make any examination to ascertain how or for what purposes Contractor has used the moneys paid on account of the Contract Price, or

   e. to determine that title to any of the Work, materials, or equipment has passed to Owner free and clear of any Liens.

5. Engineer may refuse to recommend the whole or any part of any payment if, in Engineer's opinion, it would be incorrect to make the representations to Owner referred to in Paragraph 14.02.B.2. Engineer may also

refuse to recommend any such payment or, because of subsequently discovered evidence or the results of subsequent inspections or tests, revise or revoke any such payment recommendation previously made, to such extent as may be necessary in Engineer's opinion to protect Owner from loss because:

a. the Work is defective, or completed Work has been damaged, requiring correction or replacement;

b. the Contract Price has been reduced by Change Orders;

c. Owner has been required to correct defective Work or complete Work in accordance with Paragraph 13.09; or

d. Engineer has actual knowledge of the occurrence of any of the events enumerated in Paragraph 15.02.A.

C. *Payment Becomes Due:*

1. ~~Ten~~ Twenty-one days after presentation of the Application for Payment to Owner with Engineer's recommendation, the amount recommended will (subject to the provisions of Paragraph 14.02.D) become due, and when due will be paid by Owner to Contractor.

D. *Reduction in Payment:*

1. Owner may refuse to make payment of the full amount recommended by Engineer because:

a. claims have been made against Owner on account of Contractor's performance or furnishing of the Work;

b. Liens have been filed in connection with the Work, except where Contractor has delivered a specific bond satisfactory to Owner to secure the satisfaction and discharge of such Liens;

c. there are other items including, but not limited to, liquidated damages entitling Owner to a set-off against the amount recommended; or

d. Owner has actual knowledge of the occurrence of any of the events enumerated in Paragraphs 14.02.B.5.a through 14.02.B.5.c or Paragraph 15.02.A.

2. If Owner refuses to make payment of the full amount recommended by Engineer, Owner will give Contractor immediate written notice (with a copy to Engineer) stating the reasons for such action and promptly pay Contractor any amount remaining after deduction of the amount so withheld. Owner shall promptly pay Contractor the amount so withheld, or any adjustment thereto agreed to by Owner and Contractor, when Contractor remedies the reasons for such action.

3. Upon a subsequent determination that Owner's refusal of payment was not justified, the amount wrongfully withheld shall be treated as an amount due as determined by Paragraph 14.02.C.1 and subject to interest as provided in the Agreement.

14.03 *Contractor's Warranty of Title*

A. Contractor warrants and guarantees that title to all Work, materials, and equipment covered by any Application for Payment, whether incorporated in the Project or not, will pass to Owner no later than the time of payment free and clear of all Liens.

14.04 *Substantial Completion*

A. When Contractor considers the entire Work ready for its intended use Contractor shall notify Owner and Engineer in writing that the entire Work is substantially complete (except for items specifically listed by Contractor as incomplete) and request that Engineer issue a certificate of Substantial Completion.

B. Promptly after Contractor's notification, Owner, Contractor, and Engineer shall make an inspection of the Work to determine the status of completion. If Engineer does not consider the Work substantially complete, Engineer will notify Contractor in writing giving the reasons therefor.

C. If Engineer considers the Work substantially complete, Engineer will deliver to Owner a tentative certificate of Substantial Completion which shall fix the date of Substantial Completion. There shall be attached to the certificate a tentative list of items to be completed or corrected before final payment. Owner shall have seven days after receipt of the tentative certificate during which to make written objection to Engineer as to any provisions of the certificate or attached list. If, after considering such objections, Engineer concludes that the Work is not substantially complete, Engineer will, within 14 days after submission of the tentative certificate to Owner, notify Contractor in writing, stating the reasons therefor. If, after consideration of Owner's objections, Engineer considers the Work substantially complete, Engineer will, within said 14 days, execute and deliver to Owner and Contractor a definitive certificate of Substantial Completion (with a revised tentative list of items to be completed or corrected) reflecting such changes from the tentative certificate as Engineer believes justified after consideration of any objections from Owner.

D. At the time of delivery of the tentative certificate of Substantial Completion, Engineer will deliver to Owner and Contractor a written recommendation as to division of responsibilities pending final payment between Owner and Contractor with respect to security, operation, safety, and protection of the Work, maintenance, heat, utilities, insurance, and warranties and guarantees. Unless Owner and Contractor agree otherwise in writing and so inform Engineer in writing prior to Engineer's issuing the definitive certificate of Substantial Completion, Engineer's aforesaid recommendation will be binding on Owner and Contractor until final payment.

E. Owner shall have the right to exclude Contractor from the Site after the date of Substantial Completion subject to allowing Contractor reasonable access to remove its property and complete or correct items on the tentative list.

14.05 *Partial Utilization*

A. Prior to Substantial Completion of all the Work, Owner may use or occupy any substantially completed part of the Work which has specifically been identified in the Contract Documents, or which Owner, Engineer, and Contractor agree constitutes a separately functioning and usable part of the Work that can be used by Owner for its intended purpose without significant interference with Contractor's performance of the remainder of the Work, subject to the following conditions:

1. Owner at any time may request Contractor in writing to permit Owner to use or occupy any such part of the Work which Owner believes to be ready for its intended use and substantially complete. If and when Contractor agrees that such part of the Work is substantially complete, Contractor, Owner, and Engineer will follow the procedures of Paragraph 14.04.A through D for that part of the Work.

2. Contractor at any time may notify Owner and Engineer in writing that Contractor considers any such part of the Work ready for its intended use and substantially complete and request Engineer to issue a certificate of Substantial Completion for that part of the Work.

3. Within a reasonable time after either such request, Owner, Contractor, and Engineer shall make an inspection of that part of the Work to determine its status of completion. If Engineer does not consider that part of the Work to be substantially complete, Engineer will notify Owner and Contractor in writing giving the reasons therefor. If Engineer considers that part of the Work to be substantially complete, the provisions of Paragraph 14.04 will apply with respect to certification of Substantial Completion of that part of the Work and the division of responsibility in respect thereof and access thereto.

4. No use or occupancy or separate operation of part of the Work may occur prior to compliance with the requirements of Paragraph 5.10 regarding property insurance.

14.06 *Final Inspection*

A. Upon written notice from Contractor that the entire Work or an agreed portion thereof is complete, Engineer will promptly make a final inspection with Owner and Contractor and will notify Contractor in writing of all particulars

in which this inspection reveals that the Work is incomplete or defective. Contractor shall immediately take such measures as are necessary to complete such Work or remedy such deficiencies.

14.07 *Final Payment*

A. *Application for Payment:*

1. After Contractor has, in the opinion of Engineer, satisfactorily completed all corrections identified during the final inspection and has delivered, in accordance with the Contract Documents, all maintenance and operating instructions, schedules, guarantees, bonds, certificates or other evidence of insurance, certificates of inspection, marked-up record documents (as provided in Paragraph 6.12), and other documents, Contractor may make application for final payment following the procedure for progress payments.

2. The final Application for Payment shall be accompanied (except as previously delivered) by:

   a. all documentation called for in the Contract Documents, including but not limited to the evidence of insurance required by Paragraph 5.04.B.6;

   b. consent of the surety, if any, to final payment;

   c. a list of all Claims against Owner that Contractor believes are unsettled; and

   d. complete and legally effective releases or waivers (satisfactory to Owner) of all Lien rights arising out of or Liens filed in connection with the Work.

3. In lieu of the releases or waivers of Liens specified in Paragraph 14.07.A.2 and as approved by Owner, Contractor may furnish receipts or releases in full and an affidavit of Contractor that: (i) the releases and receipts include all labor, services, material, and equipment for which a Lien could be filed; and (ii) all payrolls, material and equipment bills, and other indebtedness connected with the Work for which Owner might in any way be responsible, or which might in any way result in liens or other burdens on Owner's property, have been paid or otherwise satisfied. If any Subcontractor or Supplier fails to furnish such a release or receipt in full, Contractor may furnish a bond or other collateral satisfactory to Owner to indemnify Owner against any Lien.

B. *Engineer's Review of Application and Acceptance:*

1. If, on the basis of Engineer's observation of the Work during construction and final inspection, and Engineer's review of the final Application for Payment and accompanying documentation as required by the Contract Documents, Engineer is satisfied that the Work has been completed and Contractor's other obligations under the Contract Documents have been fulfilled, Engineer will, within ten days after receipt of the final Application for Payment, indicate in writing Engineer's recommendation of payment and present the Application for Payment to Owner for payment. At the same time Engineer will also give written notice to Owner and Contractor that the Work is acceptable subject to the provisions of Paragraph 14.09. Otherwise, Engineer will return the Application for Payment to Contractor, indicating in writing the reasons for refusing to recommend final payment, in which case Contractor shall make the necessary corrections and resubmit the Application for Payment.

C. *Payment Becomes Due:*

1. Thirty days after the presentation to Owner of the Application for Payment and accompanying documentation, the amount recommended by Engineer, less any sum Owner is entitled to set off against Engineer's recommendation, including but not limited to liquidated damages, will become due and will be paid by Owner to Contractor.

14.08 *Final Completion Delayed*

A. If, through no fault of Contractor, final completion of the Work is significantly delayed, and if Engineer so confirms, Owner shall, upon receipt of Contractor's final Application for Payment (for Work fully completed and accepted) and recommendation of Engineer, and without terminating the Contract, make payment of the balance due for that portion of the Work fully completed and accepted. If the remaining balance to be held by Owner for Work not fully completed or corrected is less than the retainage stipulated in the Agreement, and if bonds have been furnished as required in Paragraph 5.01, the written consent of the surety to the payment of the balance due for that portion of the Work fully completed and accepted shall be submitted by Contractor to Engineer with the Application for such payment. Such payment shall be made under the terms and conditions governing final payment, except that it shall not constitute a waiver of Claims.

14.09 *Waiver of Claims*

A. The making and acceptance of final payment will constitute:

1. a waiver of all Claims by Owner against Contractor, except Claims arising from unsettled Liens, from defective Work appearing after final inspection pursuant to Paragraph 14.06, from failure to comply with the Contract Documents or the terms of any special guarantees specified therein, or from Contractor's continuing obligations under the Contract Documents; and

2. a waiver of all Claims by Contractor against Owner other than those previously made in accordance with the requirements herein and expressly acknowledged by Owner in writing as still unsettled.

ARTICLE 15 – SUSPENSION OF WORK AND TERMINATION

15.01 *Owner May Suspend Work*

A. At any time and without cause, Owner may suspend the Work or any portion thereof for a period of not more than 90 consecutive days by notice in writing to Contractor and Engineer which will fix the date on which Work will be resumed. Contractor shall resume the Work on the date so fixed. Contractor shall be granted an adjustment in the Contract Price or an extension of the Contract Times, or both, directly attributable to any such suspension if Contractor makes a Claim therefor as provided in Paragraph 10.05.

15.02 *Owner May Terminate for Cause*

A. The occurrence of any one or more of the following events will justify termination for cause:

1. Contractor's persistent failure to perform the Work in accordance with the Contract Documents (including, but not limited to, failure to supply sufficient skilled workers or suitable materials or equipment or failure to adhere to the Progress Schedule established under Paragraph 2.07 as adjusted from time to time pursuant to Paragraph 6.04);

2. Contractor's disregard of Laws or Regulations of any public body having jurisdiction;

3. Contractor's repeated disregard of the authority of Engineer; or

4. Contractor's violation in any substantial way of any provisions of the Contract Documents.

B. If one or more of the events identified in Paragraph 15.02.A occur, Owner may, after giving Contractor (and surety) seven days written notice of its intent to terminate the services of Contractor:

1. exclude Contractor from the Site, and take possession of the Work and of all Contractor's tools, appliances, construction equipment, and machinery at the Site, and use the same to the full extent they could be used by Contractor (without liability to Contractor for trespass or conversion);

2. incorporate in the Work all materials and equipment stored at the Site or for which Owner has paid Contractor but which are stored elsewhere; and

3. complete the Work as Owner may deem expedient.

C. If Owner proceeds as provided in Paragraph 15.02.B, Contractor shall not be entitled to receive any further payment until the Work is completed. If the unpaid balance of the Contract Price exceeds all claims, costs, losses, and damages (including but not limited to all fees and charges of engineers, architects, attorneys, and other professionals and all court or arbitration or other dispute resolution costs) sustained by Owner arising out of or relating to completing the Work, such excess will be paid to Contractor. If such claims, costs, losses, and damages exceed such unpaid balance, Contractor shall pay the difference to Owner. Such claims, costs, losses, and damages incurred by Owner will be reviewed by Engineer as to their reasonableness and, when so approved by Engineer, incorporated in a Change Order. When exercising any rights or remedies under this Paragraph, Owner shall not be required to obtain the lowest price for the Work performed.

D. Notwithstanding Paragraphs 15.02.B and 15.02.C, Contractor's services will not be terminated if, within 7 days of receipt of notice of intent to terminate, Contractor begins to correct its failure to perform and proceeds diligently to cure such failure and become in compliance with the contract requirements. Such cure must occur within no more than 30 days of said notice unless otherwise extended by the Engineer. ~~Contractor begins within seven days of receipt of notice of intent to terminate to correct its failure to perform and proceeds diligently to cure such failure within no more than 30 days of receipt of said notice.~~

E. Where Contractor's services have been so terminated by Owner, the termination will not affect any rights or remedies of Owner against Contractor then existing or which may thereafter accrue. Any retention or payment of moneys due Contractor by Owner will not release Contractor from liability.

F. If and to the extent that Contractor has provided a performance bond under the provisions of Paragraph 5.01.A, the termination procedures of that bond shall supersede the provisions of Paragraphs 15.02.B and 15.02.C.

15.03 *Owner May Terminate For Convenience*

A. Upon seven days written notice to Contractor and Engineer, Owner may, without cause and without prejudice to any other right or remedy of Owner, terminate the Contract. In such case, Contractor shall be paid for (without duplication of any items):

1. completed and acceptable Work executed in accordance with the Contract Documents prior to the effective date of termination, including fair and reasonable sums for overhead and profit on such Work;

2. expenses sustained prior to the effective date of termination in performing services and furnishing labor, materials, or equipment as required by the Contract Documents in connection with uncompleted Work, plus fair and reasonable sums for overhead and profit on such expenses;

3. all claims, costs, losses, and damages (including but not limited to all fees and charges of engineers, architects, attorneys, and other professionals and all court or arbitration or other dispute resolution costs) incurred in settlement of terminated contracts with Subcontractors, Suppliers, and others; and

4. reasonable expenses directly attributable to termination.

B. Contractor shall not be paid on account of loss of anticipated profits or revenue or other economic loss arising out of or resulting from such termination.

15.04 *Contractor May Stop Work or Terminate*

A. If, through no act or fault of Contractor, (i) the Work is suspended for more than 90 consecutive days by Owner or under an order of court or other public authority, or (ii) Engineer fails to act on any Application for Payment within 30 days after it is submitted, or (iii) Owner fails for 30 days to pay Contractor any sum finally determined to be due, then Contractor may, upon seven days written notice to Owner and Engineer, and provided Owner or Engineer do not remedy such suspension or failure within that time, terminate the Contract and recover from Owner payment on the same terms as provided in Paragraph 15.03.

B. In lieu of terminating the Contract and without prejudice to any other right or remedy, if Engineer has failed to act on an Application for Payment within 30 days after it is submitted, or Owner has failed for 30 days to pay Contractor any sum finally determined to be due, Contractor may, seven days after written notice to Owner and Engineer, stop the Work until payment is made of all such amounts due Contractor, including interest thereon. The provisions of this Paragraph 15.04 are not intended to preclude Contractor from making a Claim under Paragraph 10.05 for an adjustment in Contract Price or Contract Times or otherwise for expenses or damage directly attributable to Contractor's stopping the Work as permitted by this Paragraph.

ARTICLE 16 – DISPUTE RESOLUTION

16.01 *Methods and Procedures*

A. Either Owner or Contractor may request mediation of any Claim submitted to Engineer for a decision under Paragraph 10.05 before such decision becomes final and binding. The mediation will be governed by the Construction Industry Mediation Rules of the American Arbitration Association in effect as of the Effective Date of the Agreement. The request for mediation shall be submitted in writing to the American Arbitration Association and the other party to the Contract. Timely submission of the request shall stay the effect of Paragraph 10.05.E.

B. Owner and Contractor shall participate in the mediation process in good faith. The process shall be concluded within 60 days of filing of the request. The date of termination of the mediation shall be determined by application of the mediation rules referenced above.

C. If the Claim is not resolved by mediation, Engineer's action under Paragraph 10.05.C or a denial pursuant to Paragraphs 10.05.C.3 or 10.05.D shall become final and binding 30 days after termination of the mediation unless, within that time period, Owner or Contractor:

1. elects in writing to invoke any dispute resolution process provided for in the Supplementary Conditions; or

2. agrees with the other party to submit the Claim to another dispute resolution process; or

3. gives written notice to the other party of the intent to submit the Claim to a court of competent jurisdiction.

ARTICLE 17 – MISCELLANEOUS

17.01 *Giving Notice*

A. Whenever any provision of the Contract Documents requires the giving of written notice, it will be deemed to have been validly given if:

1. delivered in person to the individual or to a member of the firm or to an officer of the corporation for whom it is intended; or

2. delivered at or sent by registered or certified mail, postage prepaid, to the last business address known to the giver of the notice.

17.02 *Computation of Times*

A. When any period of time is referred to in the Contract Documents by days, it will be computed to exclude the first and include the last day of such period. If the last day of any such period falls on a Saturday or Sunday or on a day made a legal holiday by the law of the applicable jurisdiction, such day will be omitted from the computation.

17.03 *Cumulative Remedies*

A. The duties and obligations imposed by these General Conditions and the rights and remedies available hereunder to the parties hereto are in addition to, and are not to be construed in any way as a limitation of, any rights and remedies available to any or all of them which are otherwise imposed or available by Laws or Regulations, by special warranty or guarantee, or by other provisions of the Contract Documents. The provisions of this Paragraph will be as effective as if repeated specifically in the Contract Documents in connection with each particular duty, obligation, right, and remedy to which they apply.

17.04 *Survival of Obligations*

A. All representations, indemnifications, warranties, and guarantees made in, required by, or given in accordance with the Contract Documents, as well as all continuing obligations indicated in the Contract Documents, will survive final payment, completion, and acceptance of the Work or termination or completion of the Contract or termination of the services of Contractor.

17.05 *Controlling Law*

A. This Contract is to be governed by the law of the state in which the Project is located.

17.06 *Headings*

A. Article and paragraph headings are inserted for convenience only and do not constitute parts of these General Conditions.

THIS PAGE LEFT INTENTIONALLY BLANK

City of Moscow
Latah County, Idaho
Sixth Street Crossing Over Paradise Creek

Section 3

Supplementary Conditions

THIS PAGE WAS INTENTIONALLY LEFT BLANK

City of Moscow
Latah County, Idaho
Sixth Street Crossing Over Paradise Creek

Supplementary Conditions

These Supplementary Conditions amend or supplement the General Conditions of the Construction Contract (ISPWC Division 100, 2015 edition). All provisions which are not so amended or supplemented remain in full force and effect.

The terms used in these Supplementary Conditions have the meanings stated in the General Conditions. Additional terms used in these Supplementary Conditions have the meanings stated below, which are applicable to both the singular and plural thereof.

The address system used in these Supplementary Conditions is the same as the address system used in the General Conditions, with the prefix "SC" added thereto.

SC-1.01.A.2. Add the following language at the end of Paragraph 1.01.A.2:

The Agreement may also be referred to as "Contract" within these Contract Documents.

SC-1.01.A.3. Add the following language at the end of Paragraph 1.01.A.3:

The Application for Payment form to be used on this Project is included in the contract package.

SC-1.01.A.9. Add the following language at the end of Paragraph 1.01.A.9:

The Change Order form to be used on this Project is included in the contract package.

SC-1.01.A.19. Delete paragraph 1.01.A.19 in its entirety and insert the following in its place:

ENGINEER:

J-U-B ENGINEERS, Inc.
201 S. Jackson Street
Moscow, ID 83843
(208) 746-9010

who is hereinafter called Engineer and who is to act as Owner's representative, assume all duties and responsibilities and have the rights and authority assigned to Engineer in the Contract Documents in connection with completion of the Work in accordance with the Contract Documents.

SC-1.01.A.20. Add the following language at the end of Paragraph 1.01.A.20:

The Field Order form to be used on this Project is included in the contract package.

SC-1.01.A.44. Supplement Paragraph 1.01.A.44 as follows:

Substantial Completion is further defined as (i) that degree of completion of the Project's operating facilities or systems sufficient to provide the Owner the full time, uninterrupted, and continuous beneficial operation of the Work; and (ii) all inspections required have been completed and identified defective Work replaced or corrected.

SC-1.01.A.51. Add the following language at the end of Paragraph 1.01.A.51:

The Work Change Directive form to be used on this Project is included in the contract package.

SC-1.01.A.52. Add the following new paragraph immediately after paragraph 1.01.A.51:

52. *Request for Information* – A written request for information, requiring a written response, to Owner, Engineer, or Contractor, initiated by Owner, Engineer, or Contractor.

SC-2.02. Delete paragraph 2.02.A in its entirety and insert the following in its place:

Owner shall furnish to the Contractor three (3) compact discs of Contract Documents which will contain plans, specifications and addenda. Conformed documents incorporating responses and Addenda developed during the bidding process will not be provided.

SC-2.03. Delete paragraph 2.03.A in its entirety and insert the following in its place:

The Contract Times will commence to run on the day indicated in the Notice to Proceed. A Notice to Proceed may be given at any time within 30 days after the Effective Date of the Agreement.

SC-2.05.B. Add the following new paragraph immediately after Paragraph 2.05.A:

B. Within the time frame noted in the Notice of Award, the Bidder to whom the award is made, shall execute and return the Agreement in the required number of copies, shall furnish the required Payment and Performance Bonds, the original plus one copy of completed WH-5 Public Works Contract Report, and shall provide certificates of insurance (and other evidence of insurance which the Owner and any additional insured may reasonably request) with copies to each additional insured identified in the Supplementary Conditions which Contractor is required to purchase and maintain in accordance with Article 5 of the General Conditions.

SC-2.06. Amend the first sentence of Paragraph 2.06.A. to read as follows:

A. Within 20 days after the Effective Date of the Agreement, but before any Work at the site is started, a conference...

SC-3.01. Add the following new paragraphs immediately after Paragraph 3.01.C:

D. The Specifications may vary in form, format and style. Some specification sections are written in varying degrees of streamlined or declarative style and some sections may be relatively narrative by comparison. Omissions of such words and phrases as "the Contractor shall," "in conformity with," "as shown," or "as specified" are intentional in streamlined sections. Omitted words and phrases shall be supplied by inference. Similar types of provisions may appear in various parts of a section or articles within a part depending on the format of a section. The Contractor shall not take advantage of any variation of form, format or style in making claims for extra work.

E. The cross referencing of specification sections under the subparagraph heading "Related Sections include but are not necessarily limited to:" and elsewhere within each specification section is provided as an aid and convenience to the Contractor. The Contractor shall not rely on the cross referencing provided and shall be responsible to coordinate the entire work under the Contract Documents and provide a complete Project whether or not the cross referencing is provided in each section or whether or not the cross referencing is complete.

SC-4.05.A Add the following to the end of the paragraph:

A. At the discretion of the Owner, any stakes or benchmarks that are not protected by the Contractor and are ultimately destroyed or disturbed by the Contractor will be replaced by the Owner and the cost charged to the Contractor.

SC-4.05. Add the following new paragraph immediately after Paragraph 4.05.A:

B. The Owner shall provide engineering surveys to establish the following reference points for construction control: As indicated in the Contract Documents.

SC-4.06. Delete Paragraphs 4.06.A and 4.06.B in their entirety and insert the following:

A. No reports or drawings related to Hazardous Environmental Conditions at the Site are known to Owner.

B. Not Used.

SC-5.04.C. Add the following new paragraph immediately after paragraph 5.04.B:

C. The limits of liability for the insurance required by Paragraph 5.04 of the General Conditions shall provide coverage for not less than the following amounts or greater where required by Laws and Regulations:

1. Workers' Compensation and related coverages under paragraphs 5.04.A.1. and 5.04.A.2 of the General Conditions:

a.	State:	Statutory
b.	Applicable Federal (e.g., Longshoreman's):	Statutory
c.	Employer's Liability:	$1,000,000

2. Contractor's General Liability (under paragraphs 5.04.A.3. through 5.04.A.6 of the General Conditions which shall include completed operations and product liability coverages and eliminate the exclusion with respect to property under the care, custody and control of Contractor:

a.	General Aggregate	$2,000,000
b.	Products - Completed Operations Aggregate	$1,000,000
c.	Personal and Advertising Injury	$1,000,000
d.	Each Occurrence (Bodily Injury and Property Damage)	$1,000,000

e. Property Damage liability insurance will provide Explosion, Collapse, and Under-ground coverages where applicable.

f. Excess or Umbrella Liability

☑ General Aggregate	$1,000,000
☐ Each Occurrence	$_____

3. Automobile Liability under Paragraph 5.04.A.6 of the General Conditions:

a. Combined Single Limit of	$1,000,000

4. The Contractual Liability coverage required by Paragraph 5.04.B.4 of the General Conditions shall provide coverage for not less than the following amounts:

a. Bodily Injury:	
Each person	$1,000,000
Each Accident	$1,000,000

b. Property Damage:

Each Accident	$1,000,000
Annual Aggregate	$1,000,000

SC-5.06 CONTRACTOR shall purchase and maintain property insurance upon the Work at the site. Consequently, delete Paragraph 5.06.A regarding OWNER-provided property insurance; retain Paragraph 5.06.A regarding CONTRACTOR-provided property insurance.

SC-5.10. Add the following new paragraphs immediately after Paragraph 5.10.A:

B. All insurance required by the Contract Documents, or by law or regulations shall remain in full force and effect on all phases of the Work, whether or not the Work is occupied or utilized by Owner, until all Work included in the agreement has been completed and final payment has been made.

C. Nothing contained in the insurance requirements shall be construed as limiting the extent of Contractor's responsibility for payment of damages resulting from his operations under the Contract. Contractor agrees that he alone shall be completely responsible for procuring and maintaining full insurance coverage as provided herein or as may be otherwise required by the Contract Documents. Any approval by Owner or Engineer shall not operate to the contrary.

SC-6.02.B. Supplement Paragraph 6.02.B of the General Conditions as follows:

Contractor (and Subcontractors) regular working hours shall be limited to the hours of 7:00 a.m. to 6:00 p.m. weekdays only unless otherwise approved by the Owner.

If work beyond the contract hours is approved, Contractor shall pay for Construction Observation and Construction Management.

SC-6.17. Amend all paragraphs of 6.17 by striking out "review and approval" and replacing with "review for general compliance."

SC-6.17.D. Add the following new paragraphs immediately after Paragraph 6.17.D.3:

4. Engineer's review of Shop Drawings and Samples, Standard Specifications and descriptive literature submitted by Contractor will be only for general conformance with design concept, except as otherwise provided, and shall not be construed as:

   a. permitting any departure from the Contract Requirements;

   b. relieving Contractor of the responsibility for any error in details dimensions or otherwise that may exist in such submittals;

c. constituting a blanket approval of dimensions, quantities, or details of the material or equipment shown; or

d. approving departures from additional details or instructions previously furnished by Engineer. Such check or review shall not relieve Contractor of the full responsibility of meeting all of the requirements of the Contract Documents."

SC-6.17 Add the following new paragraphs immediately after Paragraph 6.17.E:

F. Contractor shall furnish required submittals with sufficient information and accuracy in order to obtain required approval of an item with no more than three submittals. Engineer will record Engineer's time for reviewing subsequent submittals of Shop Drawings, samples, or other items requiring approval and Contractor shall reimburse Owner for Engineer's charges for such time.

G. In the event that Contractor requests a change of a previously approved item, Contractor shall reimburse Owner for Engineer's charges for its review time unless the need for such change is beyond the control of Contractor.

SC-7.01.D. Add the following new paragraphs immediately following Paragraph 7.01.C:

D. The Owner shall let as separate contract or perform work themselves, in the same general timeframe as this project, the following project(s) that will require coordination by the Contractor:

1. Mountain View Rd, Moscow
   Key No 13014

SC-9.03. Add the following new paragraphs immediately following Paragraph 9.03.A:

B. The Resident Project Representative (RPR) will be Engineer's employee or agent at the Site, will act as directed by and under the supervision of Engineer, and will confer with the Engineer regarding RPR's actions. RPR's dealings in matters pertaining to the Work in general shall be with Engineer and Contractor. RPR's dealings with Subcontractors shall be through or with the full knowledge and approval of Contractor. The RPR shall:

1. Schedules: Review the progress schedule, schedule of Shop Drawing and Sample submittals, and schedule of values prepared by Contractor and consult with Engineer concerning acceptability.

2. *Conferences and Meetings:* Attend meetings with Contractor, such as preconstruction conferences, progress meetings, job conferences and other project-related meetings, and prepare and circulate copies of minutes thereof.

3. *Liaison*:

   a. Serve as Engineer's liaison with Contractor, working principally through Contractor's authorized representative, assist in providing information regarding the intent of the Contract Documents.

   b. Assist Engineer in serving as Owner's liaison with Contractor when Contractor's operations affect Owner's on-Site operations.

   c. Assist in obtaining from Owner additional details or information, when required for proper execution of the Work.

4. *Interpretation of Contract Documents:* Report to Engineer when clarifications and interpretations of the Contract Documents are needed and transmit to Contractor clarifications and interpretations as issued by Engineer.

5. *Shop Drawings and Samples:*

   a. Record date of receipt of Samples and approved Shop Drawings.

   b. Receive Samples which are furnished at the Site by Contractor and notify Engineer of availability of Samples for examination.

6. *Modifications:* Consider and evaluate Contractor's suggestions for modifications in Drawings or Specifications and report such suggestions, together with RPR's recommendations, to Engineer. Transmit to Contractor in writing decisions as issued by Engineer.

7. *Review of Work and Rejection of Defective Work*:

   a. Conduct on-Site observations of Contractor's work in progress to assist Engineer in determining if the Work is in general proceeding in accordance with the Contract Documents.

   b. Report to Engineer whenever RPR believes that any part of Contractor's work in progress will not produce a completed Project that conforms generally to the Contract Documents or will imperil the integrity of the design concept of the completed Project as a functioning whole as indicated in the Contract Documents, or has been damaged, or does not meet the requirements of any inspection, test or approval required to be made; and advise Engineer of that part of work in progress that RPR believes should be corrected or rejected or should be uncovered for observation, or requires special testing, inspection or approval.

8. *Inspections, Tests, and System Startups:*

a. Verify that tests, equipment, and systems start-ups and operating and maintenance training are conducted in the presence of appropriate Owner's personnel, and that Contractor maintains adequate records thereof.

b. Observe, record, and report to the Engineer appropriate details relative to the test procedures and systems start-ups.

9. *Records:*

a. Record names, addresses, fax numbers, e-mail addresses, web site locations, and telephone numbers of all Contractors, Subcontractors, and major Suppliers of materials and equipment.

b. Maintain records for use in preparing Project documentation.

10. *Reports:*

a. Furnish to the Engineer periodic reports as required of progress of the Work and of Contractor's compliance with the progress schedule and schedule of Shop Drawing and Sample submittals.

b. Draft and recommend to the Engineer proposed Change Orders, Work Change Directives, and Field Orders. Obtain backup material from Contractor.

c. Immediately notify Engineer of the occurrence of any Site accidents, emergencies, acts of God endangering the Work, damage to property by fire or other causes, or the discovery of any Hazardous Environmental Condition.

11. *Payment Requests:* Review Applications for Payment with Contractor for compliance with the established procedure for their submission and forward with recommendations to Engineer, noting particularly the relationship of the payment requested to the schedule of values, Work completed, and materials and equipment delivered at the Site but not incorporated in the Work.

12. *Certificates, Operation and Maintenance Manuals:* During the course of the Work, verify that materials and equipment certificates, operation and maintenance manuals and other data required by the Specifications to be assembled and furnished by Contractor are applicable to the items actually installed and in accordance with the Contract Documents, and have these documents delivered to Engineer for review and forwarding to Owner prior to payment for that part of the Work.

13. *Completion*:

a. Participate in a Substantial Completion inspection, assist in the determination of Substantial Completion and the preparation of lists of items to be completed or corrected.

b. Participate in a final inspection in the company of Engineer, Owner, and Contractor and prepare a final list of items to be completed and deficiencies to be remedied.

c. Observe whether all items on the final list have been completed or corrected and make recommendations to Engineer concerning acceptance and issuance of the Notice of Acceptability of the Work.

C. The RPR shall not:

1. Authorize any deviation from the Contract Documents or substitution of materials or equipment (including "or-equal" items).

2. Exceed limitations of Engineer's authority as set forth in the Contract Documents.

3. Undertake any of the responsibilities of Contractor, Subcontractors, Suppliers, or Contractor's superintendent.

4. Advise on, issue directions relative to, or assume control over any aspect of the means, methods, techniques, sequences or procedures of Contractor's work unless such advice or directions are specifically required by the Contract Documents.

5. Advise on, issue directions regarding, or assume control over safety practices, precautions, and programs in connection with the activities or operations of Owner or Contractor.

6. Participate in specialized field or laboratory tests or inspections conducted off-site by others except as specifically authorized by Engineer.

7. Accept Shop Drawing or Sample submittals from anyone other than Contractor.

8. Authorize Owner to occupy the Project in whole or in part.

SC-12.01 C.2.a. Add the following to the end of Paragraph 12.01.C.2.a. as follows:

said 15 percent shall include all taxes and any additional insurance and bond costs.

SC-12.01 C.2.b. Add the following to the end of Paragraph 12.01.C.2.b. as follows:

said five percent shall include all taxes and any additional insurance and bond costs.

SC-12.01 C.2.c. Add the following to the end of Paragraph 12.01.C.2.c. as follows:

, except the maximum total allowable cost to OWNER shall be the Cost of the Work plus a maximum collective aggregate fee for CONTRACTOR and all tiered Subcontractors of 20 percent.

SC-13.03. Add the following new paragraphs immediately after Paragraph 13.03.F:

G. For each test CONTRACTOR causes to be performed on-site, the CONTRACTOR shall furnish to ENGINEER a copy of the record of test(s) in accordance with Section 01300, SUBMITTALS.

H. OWNER reserves the right to hire its own independent testing laboratory for quality assurance.

I. The CONTRACTOR's independent testing laboratory(ies) for Quality Control or Quality Assurance purposes shall meet the following applicable requirements:

1. Generally, meets the requirements of ASTM E 329, "Standard Specification for Agencies Engaged in the Testing and/or Inspection of Materials as Used in Construction" and ASTM D 3666, "Standard Specification for Minimum Requirements for Agency Testing and Inspecting Bituminous Paving Materials," as applicable.

2. Calibrate testing equipment at reasonable intervals by devices of accuracy traceable to either the national Bureau of Standards or accepted values of natural physical constants.

J. Contractor shall arrange, schedule and coordinate with appropriate agenc(ies) and testing laboratory(s) for all tests, inspections and approvals necessary for the Work.

SC-13.07.A. Modify the last sentence of paragraph A as follows:

A. "…found to be defective, Contractor shall within 7 days of written notification from Owner; propose a solution back to Owner, and within 14 days implement the solution, without cost to Owner and in accordance with the Owner's written instructions."

SC-13.07.B. Modify the first sentence of paragraph B as follows:

A. "If Contractor does not address the defective Work within the timelines established in 13.07.A and comply with the terms of Owner's written instructions, or in an emergency case where delay would cause serious risk, of loss or damage, Owner may have the defective Work corrected or repaired or may have the rejected Work removed and replaced."

SC-14.02.A.3 Replace 14.02.A.3 with:

"The amount of retainage with respect to progress payments shall be 5%."

SC-14.02.C.1 Amend the first sentence of Paragraph 14.02.C.1 to read as follows:

"Forty-five days after presentation…"

SC-14.07.C.1. Revise the first sentence of Paragraph 14.07.C.1 as follows:

"Forty-five days after the presentation...."

SC-14.07.C.1. Add the following language at the end of Paragraph 14.07.C.1:

"Final payment shall not be made until the State Tax Commission issues and the Owner receives a tax release stating that all taxes have been paid."

END OF SECTION

City of Moscow
Latah County, Idaho
Sixth Street Crossing Over Paradise Creek

Section 4

Revisions to the Standard Specifications (ISPWC) & Special Provisions

THIS PAGE WAS INTENTIONALLY LEFT BLANK

REVISIONS TO THE STANDARD SPECIFICATIONS (ISPWC) & SPECIAL PROVISIONS

SIXTH STREET BRIDGE OVER PARADISE CREEK, MOSCOW
CITY OF MOSCOW PROJECT NO. 126-020
J-U-B PROJECT NO. 21-20-010

The following Special Provisions and all addenda issued supplement or modify the 2020 Idaho Standards for Public Works Construction (ISPWC)

COMPLETION TIME AND LIQUIDATED DAMAGES

All work shall be substantially complete by August 26, 2022. The amount of Liquidated Damages for failure to complete the work on time will be $2,500 per day.

Construction notice to proceed for this project is anticipated on or before: May 16, 2022.

CONTRACTOR NOTES

AMERICANS WITH DISABILITY ACCESS (ADA) DURING CONSTRUCTION

The contractor shall ensure all accessibility requirements outlined in the Americans with Disabilities Act of 1990 (ADA) are adhered to throughout the construction process. This includes, but is not limited to, accessibility for vehicular, bicycle and pedestrian movements within the highway and/or public right-of-way. All necessary temporary traffic control devices shall be in place and ready for use prior to executing any work, including utility work, within an established construction boundary. The contractor is only required to maintain practical continuity where accessible facilities already exist.

Frequent checks of the vehicular, pedestrian and bicycle accommodations shall be conducted during construction to ensure the implemented temporary traffic control plan is followed and all traffic control devices are maintained in good condition.

If it is determined by the City that additional traffic control measures are required to accommodate any user within or beyond the project limits the modifications must be implemented within a 48 hour period after the request is made.

ASPHALT AND CONCRETE CUTTING

Asphalt pavement and concrete cutting shall be incidental to other items of this contract. Contractor shall ensure that cuts made in asphalt and concrete for trenches are parallel and do not wander or diverge from the intended line.

BASIS OF PAYMENT

Except as modified herein, the various roadway and bridge work called for on the Bid Schedule shall be performed, measured, and paid for as indicated on said Bid Schedules and as provided

in the 2020 IDAHO STANDARDS FOR PUBLIC WORKS CONSTRUCTION (ISPWC). The Contractor is required to have the current edition of the ISPWC standards to perform this work. Unless otherwise specified herein, all plan quantities are based upon in-place, completed, and accepted units.

BUY AMERICA

The Contractor is encouraged to use, to the greatest extent practicable, iron and aluminum as well as steel, cement, and other manufactured products produced in the United States.

If a non-American source is used, the Contractor shall provide a justification statement because 1) it is not produced by an American source or 2) the price differential or delay in acquiring American-made equipment or products undermines the feasibility of the project. The Federal Acquisition Regulation (FAR) contains a list of articles that are considered not available in the United States. *See* 48 C.F.R. § 25.104. Inclusion of a particular piece of equipment or product on this list is sufficient evidence of non-availability for the Contractor's records.

CITY WORK / WORK BY OTHERS

No work is anticipated by the City or by others for the completion of this project.

CONFLICTING PAVEMENT MARKINGS

All conflicting pavement markings shall be completely obliterated using an approved method prior to applying permanent pavement markings. The cost of performing all obliteration shall be considered incidental to other items and no separate pay item will be included for obliteration of pavement markings.

CONNECTING PIPES

Connecting new pipes, manholes, irrigation structures and catch basins to existing pipes, manholes, irrigation structures and catch basins is incidental to other work.

CONSTRUCTION STAGING

Construction staging is not anticipated for this project. However, if the Contractor proposes to stage the project, the Contractor shall furnish the City with a detailed construction staging plan based on their anticipated approach to construction activities. This plan and implementation will be the responsibility of the contractor. Final approval of the staging plans and revisions thereof must be granted by the City prior to implementation.

Staging plans that may be contained within the project plans are primarily for bidding purposes only. The contractor may utilize any staging plans contained within the bid documents as a basis for staging but the final staging plan will be provided by the contractor prior to construction activities.

The cost associated with providing the necessary staging plans will be considered incidental to the project and no additional compensation will be made.

DAMAGED AREAS BEYOND SPECIFIED CONSTRUCTION LIMITS

Damage to any areas or items not specifically identified for removal, including the existing pavement, sod, sprinklers and landscape shall be promptly repaired by the contractor. The cost to complete such repairs shall be considered incidental to the cost of the project and no additional payment will be made therefore.

ENVIRONMENTAL COMMITMENTS

Comply with ICDBG & TAP Mitigation measures enumerated:

1. The Construction Contractors must comply with the Rules for the Control of Air Pollution in Idaho, IDAPA 85.01.01.641, by implementing precautions to prevent particulate matter from becoming airborne.
2. If any items of suspected historical or archaeological value are uncovered during construction, the Contractor will be required to stop work and contact the Idaho State Historic Preservation Office and the Idaho Department of Commerce.
3. The collection and disposal of storm and surface water runoff from the project site must comply with the Idaho Department of Environmental Quality's (DEQ) Catalog of Storm Water Best Management Practices for design of all storm water treatment and disposal systems.
4. The Contractor shall comply with the provisions of the Environmental Protection Agency's National Pollutant Discharge Elimination System (NPDES) General Permit for Storm Water Discharge from Construction Activities and the Construction Storm Water Pollution Prevention Plan (SWPPP).
5. If, during the construction of the project, an underground storage tank, buried drum, other container, contaminated soil, or debris not scheduled for removal under the construction are discovered, the Contractor shall immediately notify the Engineer and the Idaho Department of Commerce. No attempt shall be made to excavated, open, or remove such material without written approval.
6. If any additional cultural resources are encountered during the course of the project, cease all ground disturbing activities until a qualified cultural resource specialist is consulted.
7. All project work shall adhere to the Migratory Bird Treaty Act (MBTA) and Bald and Golden Eagle Protection Act (BGEPA) requirements in the event that protected species are present during construction activities. If a nest is discovered in a tree slated for removal prior to the active nesting season, consult with the USFWS prior to taking any actions. If roosting, hibernating or brooding bats are present, consult the Idaho Department of Fish and Game (IDFG) prior to taking any actions.
8. Conduct all work in accordance with Idaho's Water Quality Standards as set forth in IDAPA § 58.01.02. Obtain a National Pollution Discharge Elimination System (NPDES) Construction General Permit (CGP) and develop a Storm Water Pollution Prevention Plan (SWPPP) for this project.
9. Provide advanced public notice of construction activities through newspaper ads, signage and fliers around town.

EXCESS MATERIAL SITE

The Contractor shall be responsible for providing a site for the disposal of excess or unsuitable materials. If bituminous material is to be disposed of, the site shall meet the requirements of the Idaho Department of Environmental Quality. All excess material sites shall be approved by City. No separate payment will be made for the acquisition or operation of the sites, or for loading, hauling or unloading the materials at the site.

EXISTING CONCRETE BARRIER

The Contractor shall remove existing concrete barriers from site and deliver to City shop located at 650 N Van Buren Street, Moscow, ID.

FORCE ACCOUNT AND EQUIPMENT RATES

All force account rates and equipment rates shall be determined in accordance with Section 109.03 Extra and Force Account Work of the latest edition and supplement of the Idaho Transportation Department STANDARD SPECIFICATIONS FOR HIGHWAY CONSTRUCTION.

GENERAL PROJECT INFORMATION, SCHEDULE, AND COORDINATION

1. All work shall conform to the requirements of the Construction Drawings, Contract Documents, 2020 Edition of the Idaho Standards for Public Works Construction (ISPWC), Federal, State, and Local Permit requirements, and easement or use of property agreement or conditions.

2. Coordination of work will be required and include, but not be limited to: traffic control, staging, trenching, boring, connections with adjoining utilities and utility relocations, testing, and facility commissioning.

3. The Contractor shall comply with all local and state and sediment control requirements for this project. Permits shall include all utility relocations (by utility companies) necessary to complete the project.

4. The Contractor shall apply for and obtain a Right-of-Way Construction Permit from the City at least seventy-two (72) hours prior to any construction activities. The application shall include an approved traffic control plan. Refer to the Temporary Traffic Control Plan in Contract Documents.

5. The Contractor approval of dewatering discharges to any surface waters, storm drainage or irrigation facilities, has not been secured by the City. Contractor shall be required to obtain all necessary agency approvals.

6. All fences, irrigation facilities, utility services, landscaping, and other miscellaneous facilities, removed or altered during construction shall be replaced in-kind or restored to their original (or better) condition prior to final completion. This work shall be incidental to the contract, and no payment will be made unless item(s) are specifically listed on the Bid Form.

7. Contractor shall coordinate work with the City, utility companies, and other Contractors, mobilized in the area as specified in the Special Provisions.

8. The City of Moscow will waive all city permit fees for Sixth Street Bridge and Roadway construction. The Contractor will be responsible for all other permit fees. A building permit will not be required from the City for this project. A Right of Way Use permit ***will*** be required.

9. The City of Moscow will allow Contractor to connect to a city fire hydrant with an approved backflow device. All bulk water will be furnished in accordance with the City of Moscow's Bulk Water Use Policy. Agreement and location to be negotiated between the City and Contractor prior to construction.

INFORMATION GIVEN PRIOR TO AWARD

Oral explanations, instructions and interpretations given to bidders prior to award of contract will not be binding. It is the City's intent to provide all bidders equal opportunity to access and acquire all available pertinent information necessary to formulate a responsive bid. Any information, specifications, plans, data, or interpretations that the City discovers is lacking and may be important to all bidders will be furnished in the form of an addenda, the receipt of which shall be acknowledged by the bidder.

NEW PAVEMENT OPEN TO TRAFFIC

The road will be opened to traffic no later than seven (7) days after the final lift of asphalt surfacing has been placed (except on the asphalt and concrete repair areas). Any barricades, general warning signs, barrels, cones, flashers, flags, flaggers, and any other traffic control devices required during the construction of the remaining items of work after the road is opened shall be provided by the contractor. All costs shall be incidental to other construction items and will not be paid for separately.

ON-SITE SUPERVISION

The General Contractor shall provide competent supervision during all construction activities, including SUBCONTRACTORS activities. The superintendent shall be identified at the preconstruction conference and shall at a minimum be on-site from the notice to proceed date to the completion date. If for any reason the superintendent needs to be replaced by the General Contractor, a written notice must be submitted to the City within (5) five working days before the event occurs.

PAY QUANTITIES

By the 25th of each month the Contractor shall return an electronic copy of the bid schedule spreadsheet with quantities that are to be paid for that month. Each bid item shall be accompanied with the appropriate backup documentation on how the pay quantity was calculated. This shall include such documentation as, but not limited to; stationing, location,

tallied weight tickets, sketch of calculated areas, and/or any other appropriate documentation to verify the pay quantity request. The City will verify quantities prior to remitting payment. Items failing to have the appropriate backup supporting documentation will not be paid until the information is supplied. The cost associated with providing the above outlined documentation shall be considered incidental to the project and no additional compensation will be granted.

PROJECT MAINTANENCE DURING CONSTRUCTION

The Contractor shall be responsible for project maintenance throughout the life of the contract. This responsibility includes, but is not limited to, blading, sweeping, proper and adequate drainage, access for emergency equipment, appropriate access for property owners, and dust control. All project maintenance activities shall also conform to requirements specified in any project permits. BMP's at the project site shall be the sole responsibility of the contractor.

The Contractor shall be responsible for maintaining both on-site and off-site roadway facilities that are adversely affected by construction activities, including hauling. This maintenance may include; but is not limited to, street sweeping to eliminate tracking (within the project limits, adjacent streets, private driveways, and parking lots), and roadway repairs due to truck and equipment traffic. Required roadway facility maintenance shall be at the discretion of the City.

The Contractor shall provide a water truck and driver for dust abatement use at City's discretion. Failure to adequately provide dust control shall be adequate cause for stopping work. The costs to provide dust control by other than the Contractor shall be deducted from the progress estimates.

The Contractor shall backfill trenches as soon as possible the same day the trench is excavated. Pipe and conduit crossings, manholes, and miscellaneous construction in existing roadways remaining open to traffic shall be constructed with temporary asphalt patches.

The cost of all project maintenance and roadway facility work, including temporary asphalt patches if needed, shall be considered incidental to other items of work and no separate payment will be made.

PROPERTY OWNER COORDINATION

Contractor shall coordinate items of work affecting adjacent property owners, including but not limited to landscape removal and replacement, sprinklers, irrigation facilities, fencing, sod care, and trees.

QUALITY CONTROL AND QUALITY ASSURANCE

No separate measurement or payment to the Contractor will be made for the quality control and quality assurance effort expected as part of the Contactor’s work.

RE-TESTING OF MATERIALS

Re-testing necessitated by the failure of quality assurance testing of materials placed by the contractor shall be at the contractor's expense. These costs shall be deducted from progress estimates.

SHOP DRAWING REVIEW

Plans show details of all structures, lines, grades, typical cross sections of the roadway, location and design of all structures and a summary of items appearing on the proposal. The Contractor shall keep one set of plans available on the work site at all times.

The Contractor will supplement the plans by such working drawings necessary to adequately control the work. Working drawings shall be submitted to the Engineer for review in advance of the start of the proposed work. The Contractor shall allow sufficient Engineer review time and corrections resubmitted by the Contractor without impacting the approved construction schedule. The drawings shall be on sheets measuring 11 in. x 17 in. Unless otherwise stated in the contract, the Engineer will require up to 15 business days from the date the submittals or re-submittals are received until they are returned to the Contractor. No extension to contract time will be given due to re-submittals or the failure of the Contractor to provide any information necessary in a timely fashion. If necessary, drawings will be signed and sealed by a Professional Engineer licensed to practice in the State of Idaho.

This review time will increase if the drawings submitted do not meet the contract requirements or contain sufficient details.

For structures, six sets of working drawings shall be furnished and shall include stress sheets, shop drawings, erection plans, coffer dam plans, bending diagrams for reinforcing steel, or any other supplementary plans or similar data required of the Contractor. All structural drawings provided shall be sealed by a Professional Engineer licensed to practice in the State of Idaho.

Working drawings shall be approved before beginning the work covered by the submitted drawings. Such approval is only for general conformance with the information given in the contract documents and does not relieve the Contractor of responsibility for correctness of the details and dimensions, nor does it waive any requirements of the specifications.

The contract price shall include the cost of furnishing all submitted shop and/or working drawings.

SITE CLEANUP

Upon completion of all work, the Contractor shall clean the entire construction site. Final clean up shall consist of removal of all construction debris, trash, remaining construction stakes, construction signs, etc. from the site. The Contractor shall sweep all sidewalks and streets as necessary to remove any soil, rocks, gravel or other materials. The Contractor shall clean all catch basins and manholes removing any sand, dirt, gravel or debris. Final cleanup shall be considered incidental to the project and no separate payment will be made.

SOURCES

Contractor is to use approved commercial sources for all uncrushed aggregate, crushed aggregate, hot plant mix asphalt pavement, and concrete aggregates.

STORMWATER FLOWS

The Contractor is responsible for transmitting existing stormwater and irrigation flows during construction. All costs associated with transmitting existing flows, including flows from the temporary water quality best management practices on the project, shall be considered incidental.

STORM WATER MANAGEMENT

Contractor shall implement controls to protect storm sewer systems & waters of the U.S. located on or near project limits. Contractor to follow requirements of the National Pollutants Discharge Elimination System (NPDES) as issued to the City of Moscow by the EPA. The contractor is required to implement and maintain said plan through life of contract. The removal of all temporary construction Best Management Practices (BMPs) after completion of all required work to final stabilization is considered incidental to this project.

BMPs for controlling pollutant transport from the construction site and activities can be found in a number of publications and locations including, but not limited to:

- Idaho Department of Environmental Quality, Catalog of Storm Water Best Management Practices for Idaho Cities and Counties: Phone: (208) 373-4372 or online at: http://www.deq.idaho.gov/media/622263-Stormwater.pdf
- United States Environmental Protection Agency- Region 10: Phone: (800) 424-4372 or online at: http://yosemite.epa.gov/R10/WATER.NSF/Stormwater/home
- City of Moscow Stormwater Management Services: Phone (208) 883-7230
- Idaho Transportation Department, Erosion and Sediment Control Manual: Phone (208) 334-8476

Payment for this item will be made under the appropriate bid item numbers.

SUBGRADE

It shall be the Contractor's responsibility to maintain the integrity of the exposed subgrade. Degradation due to Contractor operations or weather shall be remedied under the guidance of a geotechnical engineer.

All costs to maintain and repair including, geotechnical engineering, etc. shall be incidental to the project and no additional compensation will be made.

TRAFFIC CONTROL

Local and emergency vehicle access shall be maintained at all times. All traffic control items not specifically listed in the bid schedule shall be incidental to this contract, and no additional compensation will be paid.

TRENCHING

All excavation and trenching shall meet OSHA requirements. Trenches shall be backfilled and properly compacted, closed at the end of each day, and barricaded, as needed.

UTILITY COMPANY COORDINATION

It shall be the Contractor's responsibility to contact and coordinate with the various utility companies as necessary for the successful completion of the project. This coordination effort shall include, but not be limited to, working other than normal operation hours to permit the relocation of utilities and construction of the roadway within the time frame of this contract. The cost to contact and coordinate with utilities shall be considered incidental to other items of work and no separate payment will be made.

Utility coordination was requested through the City during the design of this project. Utility information is shown only for surface features, and if provided by the owner of the utility for non-surface features. The information shown is for reference purposes only and does not necessarily represent actual field conditions. The Engineer assumes no liability for the accuracy of the information shown, or conflicts due to inaccurate or incomplete utility information. The Contractor shall call Dig Line a minimum of 48 hours prior to any excavation to request utility locations at 1-800-342-1585.

The Contractor shall notify the underground utility owners 48 hours before final paving to allow for adjustments to valves or manholes.

WARNING AND REGULATORY SIGNS

Existing warning and regulatory signing (excluding parking signs) shall be retained and protected throughout the project limits unless otherwise noted. This may require multiple relocations, which will be incidental to other bid items. Existing warning and regulatory signs that are designated for removal and replacement and do not conflict with construction traffic control signs shall be maintained during construction and, if necessary, relocated to locations where the signs are visible to traffic and serve their original purpose, which will be incidental to other bid items.

SECTION 201
CLEARING AND GRUBBING AND REMOVAL OF OBSTRUCTIONS

PART 1 – GENERAL

Amend Part 1.1 to include:

C. Removal of existing concrete and shall consist of saw cutting, removing, and disposing of the existing curb, gutter, valley gutter, sidewalk and portions of existing driveways as shown on the plans.

D. Removal existing guardrail and disposing of or delivering to a location determined by the City.

E. Contractor shall notify the property owner's 1-week prior to demolition and shall coordinate removal and replacement of items with owners.

F. Contractor shall verify slope staking and field locate catch limits to identify any unforeseen impacts not identified on the contract documents.

PART 3 – WORKMANSHIP

Amend Part 3.2 to Include:

F. ASPHALT AND CONCRETE CUTTING

1. All cutting of existing asphalt pavement and concrete shall be saw cut where new asphalt will connect to existing asphalt or where concrete will connect to existing concrete. The saw cut shall be made with an Engineer approved power driven saw. The joint shall be cut to a depth as to allow for a clean finish of the entire depth of the existing pavement. Broken on disfigured edges along the existing asphalt remaining in place will not be accepted. Saw cuts will not be paid for separately but included in this item.

PART 4 - MEASUREMENT AND PAYMENT

Revise 4.1.C. to Read:

C. Removal of Obstructions: By the lump sum (LS). Includes full compensation for removal of existing guardrail, curb, gutter, sidewalk, storm drain, street signs, sign posts, and sign foundations, and all materials, labor, saw cutting, and equipment necessary for completing the work and all appurtenances not itemized on the Bid Schedule.

1. Bid Schedule Payment Reference: **201.4.1.C.1**
2. Bid Schedule Description:
   Removal of Obstructions…….lump sum (LS).

Revise 4.1.D. to Read:

D. Removal of Bituminous Surface: By the horizontal square yard per plan quantities or as measured in the field for directed. Refer to Geotechnical Engineering Evaluation for additional information. Includes full compensation for all materials, labor, saw cutting, and equipment necessary for completing the work and all appurtenances not itemized on the Bid Schedule.

1. Bid Schedule Payment Reference: **201.4.1.D.1**
2. Bid Schedule Description:

Removal of Bituminous Surface…….square yard (SY).

Revise 4.1.E. to Read:

E. Removal of Existing Water Main – Size _____: By the horizontal linear foot. Includes full compensation for all materials including removal of any concrete caps, labor, and equipment necessary for completing the work and all appurtenances not itemized on the Bid Schedule.

1. Bid Schedule Payment Reference: **201.4.1.E.1**
2. Bid Schedule Description:
   Removal of Existing Water Main – Size 8”…….linear foot (LF).

3. Bid Schedule Payment Reference: **201.4.1.E.3**
4. Bid Schedule Description:
   Removal of Existing Water Main – Size 24”…….linear foot (LF).

Revise 4.1.F. to Read:

F. Removal of _____: By the each. Includes full compensation for all materials, labor, saw cutting, and equipment necessary for completing the work and all appurtenances not itemized on the Bid Schedule.

1. Bid Schedule Payment Reference: **201.4.1.F.1**
2. Bid Schedule Description:
   Removal of Culverts…….each (EA).

3. Bid Schedule Payment Reference: **201.4.1.F.3**
4. Bid Schedule Description:
   Removal of Existing Hydrant…….each (EA).

END OF SECTION

SECTION 202
EXCAVATION AND EMBANKMENT

PART 1 – GENERAL

Amend Part 1 to include:

1.5 All soil material excavated from the roadway, as defined in the ISPWC 203, shall become the property of the Contractor. All export activities shall comply with Section 202 of the ISPWC and all costs incurred shall be incidental to the excavation pay item as stated in Section 201 of these Special Provisions and Revisions to the ISPWC. It shall be the Contractor’s responsibility to acquire the disposal site. The Contractor shall acquire written permission from the Owner of such additional waste sites proposed, and a copy of said permission shall be furnished to the Engineer prior to any hauling to that site. There will be no separate payment item for hauling of any such material.

PART 3 – WORKMANSHIP

Amend Part 3.7 to include:

E. **Excavation of Unsuitable Materials:** By the cubic yard and to a depth determined in the field by the City. The repair is to consist of the excavation, disposal of the existing soil, replacement with uncrushed aggregate base in accordance with section 801, and Class A compaction. All Excavation of Unsuitable Material areas must be approved in the field by the City before the work commences. Any unsuitable excavation quantities submitted by the contractor without prior field approval will be denied payment.

F. **Structural Backfill: (Unsuitable Material Excavation):**

- 6-inches or less in depth, material suitable for structural backfill shall be Crushed Aggregate for Base 3/4-inch_Type I.
- 6-inches to 14-inches in depth, material suitable for structural backfill shall be Crushed Aggregate for Base 2-inch_Type II or 6" Uncrushed Aggregate Base Coarse

PART 4 - MEASUREMENT AND PAYMENT

Amend Part 4.1.D to include:

A. Excavation: By the cubic yard includes full compensation for all cost associated with furnishing all labor, tools, and materials necessary for completing the work including: excavation, dewatering, offsite haul, disposal, structural backfill, crushed aggregate base, dust abatement, compaction and traffic control.

1. Bid Schedule Payment Reference: **202.4.1.A.1**
2. Bid Schedule Description:
   Excavation…….…….cubic yard (CY).

Amend Part 4.5.A to include:

B. Unsuitable Material Excavation: By the cubic yard measured in its original position within the limits designated by the Engineer, from field cross section using the Average End Area method with no correction for curvature. Includes full compensation for all cost associated with furnishing all labor, tools, and materials necessary for completing the work including: excavation, dewatering, offsite haul, disposal, structural backfill, crushed aggregate base, dust abatement, compaction and traffic control.

1. Bid Schedule Payment Reference: **202.4.5.A.1**
2. Bid Schedule Description:
   Unsuitable Material Excavation…….cubic yard (CY).

Amend Part 4.8.A to include:

C. Dust Abatement Water. By the 1,000 Gallons measured through calibrated tanks, distributor or accurate water meters. Includes full compensation for all materials, labor and equipment necessary to completing the work and all appurtenances not itemized on the Bid Schedule.

1. Bid Schedule Payment Reference: **202.4.8.A.1**
2. Bid Schedule Description:
   Dust Abatement Water……per 1,000 gallons (MG).

END OF SECTION

SECTION 206
PERMANENT EROSION CONTROL

PART 3 – WORKMANSHIP

Replace Part 3.1.C.2 with:

2. Use the following seed mix on all disturbed areas:

GRASSES	POUNDS SEED PER ACRE
Annual Ryegrass	10
Crested Wheatgrass	17
Canada Bluegrass	5
Sheep Fescue	9
Hard Fescue	9
TOTAL	50

END OF SECTION

SECTION 308
BORING AND JACKING

PART 1 - GENERAL

Amend Part 1.1 to include:

B. Steel casing sleeves under crossings as shown on the Plans, open cut installed.

Amend Part 1 to include:

1.7 GENERAL DESIGN PERMORMANCE REQUIREMENTS

A. Casing sizes shown on the Plans shall be considered nominal. If the Contractor's means or methods require a larger diameter casing, the Contractor shall submit to the Engineer for review and approval. No additional payment will

be made for casing modifications from the nominal sizing and thickness shown on the Plans and requirements described in these specifications.

B. Contractor is fully responsible in field verifying actual locations of all utilities within the work zone. Contractor shall maintain service of all existing utilities.

C. Comply with OSHA, state and local requirements for providing a safe and stable excavation, protection of the work, and adjacent properties and structures.

D. Employ and deploy shoring/excavation support structures, without causing damage to nearby structures, roadway or utilities.

PART 2 - MATERIALS

Amend Part 2.2.A to read:

A. Conform to ASTM A252 with minimum wall thickness as shown on the Plans. Submit casing manufacturer certification of compliance with these specifications.

Amend Part 2.4.A to read:

A. Natural skids such as redwood or cedar are not allowed. Casing insulator shall be used to electrically isolate the casing pipe from the water main and shall be stainless steel, PSI model “S12-GN2” centered restrained or approved equivalent. Casing insulators shall be designed to provide 1” clearance between runner and top of the casing wall. Runner height shall be sufficient to resist pipeline floatation. Minimum number of runners shall be as shown on the Plans.

Amend Part 2.4.A and B to refer to the details shown on the Plans.

Amend Part 2.5.A to read:

A. Carrier pipe shall be in accordance with Section 401 and shall be as shown on the Plans. Carrier pipe installed inside casings shall be fully restrained at all joints.

Amend Part 2 to include:

2.7 END SEALS

A. End seals shall be PSI Model “C” or approved equivalent for sleeves where a carrier pipe is installed.

PART 3 - WORKMANSHIP

Amend Part 3.1 to include:

A. Call Dig-Line for locates.

B. Adhere to all requirements of the applicable permitting authorities and City.

C. Allow for uninterrupted and continuous use of surrounding utilities and pipelines as specified elsewhere.

D. Dewater in accordance with Section 205.

E. Utilize open trenching to install casing sleeves to the line and elevations as indicated on the Plans. Install steel casing sleeve using SD-301 typical trench detail, with Type A-1 bedding system.

F. Install casing spacers/insulators per manufacturer's recommendations and the details shown on the Plans. Ensure no floatation is allowed from inside of the casing to the runner height. Casing spacers shall be aligned and uniformly distribute weight.

G. Ends of casings shall not be closed and material shall not be installed inside of casing until after pressure testing is complete and approved by the City. After pressure testing, casing ends shall be sealed.

H. Surface Repair in accordance with plans and USACE permit for project.

PART 4 - MEASUREMENT AND PAYMENT

Amend Part 4.1 to include the following:

C. Steel Casing Sleeve – Size _____ (0.375" Thick): On a per linear foot measured on a horizontal basis through the centerline of the installed carrier pipe for the size and location indicated. Payment includes full compensation for installation of new casing sleeve and appurtenances for the carrier pipe. Carrier pipe shall be paid under section 401 pay items. Payment includes full compensation for providing all materials, labor, tools, and equipment necessary to complete the work including pit excavation and backfill, joint restraints, casing insulators, end seals, labor, dewatering, trenching, bedding, backfilling, miscellaneous material, surface restoration, and all incidental work required.

1. Bid Schedule Payment Reference: **308.4.1.C.1**
2. Bid Schedule Description:
   Steel Casing Sleeve – Size 18" (0.375" Thick)……linear foot (LF).

3. Bid Schedule Payment Reference: **308.4.1.C.3**
4. Bid Schedule Description:
   Steel Casing Sleeve – Size 36" (0.375" Thick)……linear foot (LF).

END OF SECTION

SECTION 401
WATER PIPE AND FITTINGS

PART 1 - GENERAL

Amend Part 1.4.A to read:

D. Submit shop drawings including accurate dimensions and layout for materials to be installed under this section.

Amend Part 1.4 to include:

D. Product Data: Provide data on pipe materials, pipe fittings, splice kits, valves and all other appurtenances.

PART 2 - MATERIALS

Amend Part 2.2.A.1 to read:

1. Pressure Class: 235 psi (DR 18), or as indicated in the Contract Documents.

Amend Part 2.2.B.1 to read:

1. Pressure Class: 235 psi (DR 18), or as indicated in the Contract Documents.

Amend Part 2.3.C to read:

C. Tyler Ductile Iron Compact Fittings Using Mechanical or Push-on Joints, 3 inch through 24 inch: ANSI/AWWA C 153.

Amend Part 2.3.D to read:

D. Tyler Ductile Iron or Gray Iron Fittings Using Mechanical, Flanged, or Push-on Joints, 3 inch through 24 inches: ANSI/AWWA C 110.

Amend Part 2.8.A to read:

A. Concrete: Per Section 703 – Cast-in-Place Concrete. Minimum compressive strength of 3000 psi.

Amend Part 2.8 to include:

B. For pipes larger than 18” in diameter the thrust block must be designed and stamped by a professional engineer licensed in the state of Idaho at no addition cost to the City. Provide the City with a copy of thrust block design for review and acceptance at least 14 calendar days prior to construction of the thrust block. Thrust block shall not be constructed until the City has reviewed the design.

Amend Part 2.9.B to read:

B. Product: EBAA iron series 2000 PV (PVC Pipe) or EBAA Iron Series 1100 Megalug (Ductile Iron Pipe) or approved substitution, and to meet requirements of ASTM F 1674. An identification number consisting of year/day/plant/shift to be cast into each gland body from which to trace test results. Gland shall be rated at

350 psi with 2:1 safety factor. Gland shall be fusion epoxy coated, minimum dry film thickness 20 mils.

PART 3 - WORKMANSHIP

Amend Part 3.1 to include:

H. The Contractor shall not bury any work to be inspected without such inspections taking place. The Contractor shall notify twenty-four (24) hours in advanced and use every number available to contact the Field Inspector. If work is covered without the appropriate inspection, the Contractor will dig and expose any appurtenance which requires inspection at the Contractor's expense.

Amend Part 3.2.M to include:

1. All openings in the pipeline shall be closed with watertight expandable type plugs, a push in plug (or pipe section with cap) or cast-iron test plugs at the end of each day's operation. The use of fabric, plastic, a bucket, wood or other similar temporary plugs will not be permitted.

Amend Part 3.2 to include:

R. Pipe may deflect a maximum:

1. PVC: 1 degree or 4 inches for 20-foot lay length and must meet manufacturer specification regarding "stab line".

2. Ductile Iron Bell and Spigot Joints:
   a. 4 - 12 inch Nominal Diameter: 5 degrees or 21 inches for 20-foot lay length and must meet manufacturer specification regarding "stab line".
   b. 12 - 24 inch Nominal Diameter: 3 degrees or 12 inches for 20-foot lay length and must meet manufacturer specification regarding "stab line".

3. Ductile Iron Mechanical Joint:

TABLE 401.3.2.R.3 MINIMUM JOINT DEFLECTION MECHANICAL JOINT PIPE	
NOMINAL PIPE SIZE	**DEFLECTION**
IN.	**DEGREES**
4	**8.18**
6	**7.07**
8	**5.21**
10	**5.21**
12	**5.21**
16	**3.35**
18	**3.00**
20	**3.00**
24	**2.23**

S. Coupling and compression fitting maximum allowable pipe gap: ½ inch.

T. Align new pipe to interface with existing and apply no unusual stress to the pipe. Install pipe to allow for expansion and contraction without stressing pipe or joints.

U. Maintain separation of water main from any sources of contamination discovered in accordance with Idaho Department of Health and Welfare, Division of Environmental Quality Regulations.

V. Joining PVC, Ductile Iron and AC Pipe and Fittings

1. Rubber gasket type fittings:
   a. Maximum pipe length: 20 feet.
   b. Minimum pipe length: 1-1/2 feet.

2. Join pipes 4 inches and larger at tees, valves, and other fittings using mechanical joints.
   a. Additional joint restraint shall be installed if deemed applicable by the City.

3. Where rubber ring fittings are used, machine pipe ends in accordance with manufacturer recommendations.

4. Install Romac couplings at AC to PVC pipe joints (if encountered), where tees or elbows are not installed. All valves shall be bolted to tees and crosses where applicable. Valves used with ninety (90) degree elbows shall be bolted to one side of the fitting.

5. See Table 401.3.2.V.5 for mechanical joint fitting bolt torques, unless otherwise specified by the manufacturer.

TABLE 401.3.2.W.3 MECHANICAL JOIN BOLT TORQUE		
JOINT SIZE	BOLT SIZE	TORQUE RANGE
IN.	IN.	FT-LBS
4 - 24	8.18	75 - 90
30 - 36	7.07	100 - 120
42 - 48	5.21	120 - 150

W. Joint Restraint.

1. All mechanical joint deflection greater than eleven and one-quarter (11 1/4) degrees shall be physically restrained with a concrete thrust block. Concrete thrust blocks shall be installed in accordance with ISPWC SD-403 and Section 401.3.4.D. For pipes larger than 18” in diameter install thrust blocks according to Section 401.2.8.

X. Gasket installation lubricant shall be suitable for use in potable water.

1. It shall be delivered to the job in closed containers and kept clean.

2. Use of other agents not meeting manufacturer specifications is prohibited.

Y. Cutting and Repairing Existing Mains.

1. Wholly or partially dewatered mains shall be returned to service after approval and the following requirements are met:
   a. Interior pipe and fittings used in repair shall be swabbed or sprayed with a 1 percent hypochlorite solution before installation.
   b. Flush immediately after repairs are complete and continue until water is no longer discolored. If valve and hydrant locations permit, flush towards the work location from both directions.
   c. Collect bacteriological samples after repairs are complete. If flow direction is unknown, sample each side of the repair.
   d. If positive bacteriological samples are recorded, the City will evaluate and determine a corrective action. Sample daily until two consecutive negative samples are recorded with a minimum of 24 hours between samples.

Amend Part 3.4.D to read:

D. Thrust blocks shall be poured the full depth of the fitting. A minimum 4 mil plastic sheeting shall be between the thrust block and fitting. Fitting shall be double wrapped.

Amend Part 3.4 to include:

G. The concrete shall be poured to a perpendicular undisturbed embankment and meet size requirements, refer to Section 401.2.8 and ISPWC SD-403.

H. Thrust blocks must be inspected by the City prior to backfill.

I. Anchor bars shall be ¾" minimum diameter steel rods; coat tie rods with bituminous coating or approved equal. Hook (2" min.) all embedded ends.

Amend Part 3.9.A to read:

A. Flushing prior to disinfection shall comply with ANSI/AWWA C 651, DEQ guidelines, and City requirements.

Amend Part 3.9.C.2 to read:

2. Dispose water at Paradise Creek according to DEQ guidelines and to a final location approved by the City. The Contractor shall provide chlorine reducing agents to meet discharge performance requirements.

Amend Part 3.9.D to include:

3. Bacteriological Test Criteria:
   a. Minimum 1 test with <1 coliform bacteria.
   b. Standard plate count <100.

Amend Part 3.10 to read:

A. Expose existing water main at designed tie-in locations prior to constructing new water main and verify location/type of pipe. Notify Engineer and City if actual conditions are different than depicted on the Plans. Maintain stability of existing water main at all times.

B. Furnish and install necessary fittings, restraints, and thrust blocks prior to making connection. Follow Water Main Phasing plan provided by the City for all necessary testing and installation requirements.

C. Maximum allowable pipe gap at couplings is ½-inch.

D. When work is started on a connection, it shall proceed continuously without interruption and as rapidly as possible until completed. If the connection to the existing system involves turning off the water, the Contractor shall be responsible for notifying the residents affected by the shutoff. No shutoff of mains will be permitted overnight, over weekends, or on holidays.

E. No connections or modifications to the existing water system shall be made unless the Engineer and authorized representative of the City's Water Department is present. All such connections or modifications shall be completed between 6:30 a.m. and 5:00 p.m., Monday through Friday, unless requested and approved a minimum of 2 working days in advance.

Amend Part 3 to include:

3.12 STORAGE

E. Seal pipe ends and cover with tarps for long term outdoor pipe storage.

F. Upon delivery, inspect pipes stored longer than 6 months.

1. Pipes failing inspection will be rejected by the City.
2. The supplier shall replace rejected pipe at no expense to the Contractor or City.

3.13 SEQUENCING WORK PLAN AND COORDINATION

A. A preliminary sequencing schedule is listed below. **However, the Contractor shall review and submit a water installation, flushing, and testing plan to be approved by the City prior to the pre-construction meeting.**

1. Contractor to pothole at designed tie-in locations prior to constructing new 10" main and notify Engineer if actual conditions are different than depicted on the Plans.

2. Install 10” PVC C900 water main parallel to existing 8” water main per Plans – tie in to Mountain View side first. Install valve at tie in to provide control of water for the 10”. Maintain stability of existing 8” water main at all times.

3. Clean, swab all pipe/fittings to disinfect throughout install. If pipe is kept clean throughout installation, place (1) tablespoon of granular chlorine per 10” stick of pipe.

4. Install pressure-tight cap on each open end of new 10” C900 pipe and install necessary amount of ecology blocks for upcoming pressure test.

5. Fill 10” line from Mountain View valve. After a 24-hour bake period, Water Department will take first “Bac-T” test. Will need to wait 24 hours for results.

6. Assuming passed test, Water Department to take second “Bac-T” test. Will need to wait another 24 hours for results of second “Bac-T” test.

7. Pressure test can start once the second “Bac-T” test is passed. Set up pressure testing apparatus on fire hydrant for 10” line. Water Department to provide pump and run pressure test at 150 psi.

8. After all three tests have passed successfully, Water Department to close valve at Park Dr and close valve on west side of cluster in Mountain View Rd to allow for 10” tie in. Shut down limited to 10 hours during non-irrigation season.

9. With two crews, cut into existing 8” water main at designed connection points per Plans. Dewater into Paradise Creek with approval from City of Moscow and applicable permits/agencies. Dechlorinate per Water Department requirements prior to discharge.

10. Water Department to open valve at Mountain View Rd, and Water Department to take final “Bac-T” test and wait 24 hours.

11. Once passed, Water Department to open valve at Park Dr cluster.

12. Locate stations can be installed outside shutdown windows, if needed.

13. Remove existing water main per Plans.

14. Contractor to complete all temporary surface restoration per plans/specs before beginning 24-inch pipe replacement to allow one lane traffic on the north side of Sixth Street while replacing the 24-inch pipe.

15. Contractor to pothole at designed tie-in locations prior to constructing new 24” main and notify Engineer if actual conditions are different than depicted on the Plans.

16. Install 24” PVC C900 parallel to existing 24” water main per Plans – do not cut in. Maintain stability of existing 24” deflected joint DIP and avoid existing concrete cap and thrust blocks.

17. Clean, swab all pipe/fittings to disinfect throughout install. If pipe is kept clean throughout installation, place (1) tablespoon of granular chlorine per 24” stick of pipe.

18. Install new fire hydrant on east side of Paradise Creek per Plans to be used for flushing and sample site.

19. Install pressure-tight cap on each open end of new 24” C900 pipe and install necessary amount of ecology blocks for upcoming pressure test.

20. Fill 24” line with adjacent existing hydrant on 24” line. Water Department to take first “Bac-T” Test after a 24-hour bake period. Will need to wait 24 hours for “Bac-T” results.

21. Assuming passed test, Water Department to take second “Bac-T” test. Pressure test can start at any time during the “Bac-T” process. Set up pressure testing apparatus for 24” line. Water Department to provide pump and be on site to witness 2-hour duration pressure test at 150 psi.

22. After all three tests have passed successfully, Water Department to close 24” valve at Park Dr and close 24” valve at Mountain View Rd. Shut down limited to 10 hours during non-irrigation season.

23. With two crews, cut into existing 24” water main at designed connection points per Plans. Dewater into Paradise Creek with approval from City of Moscow and applicable permits/agencies. Dechlorinate per Water Department requirements prior to discharge.

24. Water Department to open valve at Mountain View Rd to take sample from newly installed fire hydrant, and Water Department to take final “Bac-T” test and wait 24 hours for passing result.

25. Water Department to open valve at Park Dr after passing result.

26. Remove existing water main and concrete cap per Plans.

27. Locate stations can be installed outside shutdown windows, if needed.

28. Contractor to complete all temporary/permanent surface restoration per plans/specs.

PART 4 - MEASUREMENT AND PAYMENT

Amend Part 4.1.A to read:

A. Water Main Pipe – Size _____ – Type C900, Class 235 PVC (DR 18): By the linear foot for the type and size of pipe measured along the horizontal centerline of the pipe through all fittings and valves. Includes pipe, fittings, connections, thrust blocks, restraints, cleaning, disinfection and testing, excavation, bedding, backfill, and all appurtenances not itemized in the Bid Schedule.

1. Bid Schedule Payment Reference: **401.4.1.A.1**
2. Bid Schedule Description:
   Water Main Pipe – Size 10" – Type C900, Class 235 PVC (DR 18)….linear foot (LF).

3. Bid Schedule Payment Reference: **401.4.1.A.3**
4. Bid Schedule Description:
   Water Main Pipe – Size 24" – Type C900, Class 235 PVC (DR 18)….linear foot (LF).

Amend Part 4.1 to include:

C. Connect to Existing Water Main: By each as listed at the designated locations on the plans, regardless of the size or type of existing water main. Includes full compensation for all materials, labor, coordination, and equipment necessary for completing the work and all appurtenances not itemized in the Bid Schedule.

1. Bid Schedule Payment Reference: **401.4.1.C.1**
2. Bid Schedule Description:
   Connect to Existing Water Main…….each (EA).

END OF SECTION

SECTION 402
HYDRAULIC VALVES

PART 1 - GENERAL

Amend Part 1.4 to include:

D. Submit product data for all valves and associated parts.

PART 2 - MATERIALS

Amend Part 2.2.A to read:

A. American Flow Control Series 2500 Resilient Seated Gate Valves for Water Supply Service: ANSI/AWWA C 509.

Amend Part 2.2.A.3 to read:

3. Actuator:

a. Above ground installations to be fitted with a twelve (12) inch diameter handwheel operator.
b. Below ground installations to be fitted with a two (2) inch operating nut and key.

Remove Part 2.2.A.6.

Amend Part 2.7 to read:

A. Tyler 6855 Series.

1. Buffalo Style with mud plug:
   a. 12 inch and Smaller: 2-piece slip-type.
   b. 12 inch and Larger: 3-piece slip-type.

2. Size: Minimum 5-1/4 inch inside diameter, locking style.

3. Material: Cast iron.

4. Adjustment: Adjustable with sufficient length for bury.

5. Cover: Cast iron stamped “Water”.

B. Operating nut extensions are required to within thirty-six (36) inches below finished grade.

1. Extension Material: Coated Steel.

PART 3 - WORKMANSHIP

Amend Part 3.D.A to read:

A. Install appurtenances according to the following requirements unless otherwise dictated by the Contract Documents.

1. Main line and lateral isolation valve sizes shall match the main size in which they are installed.

2. Isolate stubs and mains:
   a. Gate Valves: Two (2) to ten (10) inches in diameter.
   b. Butterfly Valves: Ten (10) inches in diameter and larger.

3. Bolt valves designed near fittings with flanged fittings or Foster gland pack adapters.

4. Clean flanges and gland packs prior to installation.

5. Valve Boxes:
   a. Cut lower section square to grade and adjust top section to match surface elevation.
   b. Replace valve boxes if sections are broken or cracked.

c. Valve Box Extensions:
   i. Install five (5”) inch diameter cast iron double hub soil pipe cut to the appropriate length.
d. Turned on valves, clear all debris, and raise valve box to finished grade at completion.

6. Operating Nut:
   a. If upon completion, valve operating nut is not easily operated the Contractor shall excavate and adjust the valve box as necessary for smooth operation at no cost to the City.

PART 4 - MEASUREMENT AND PAYMENT

Amend Part 4.1.A to read:

A. Gate Valve – Size _____: Per each for the type and size of valve specified. Includes valve, fittings, valve boxes, connections, actuators, cleaning, disinfection, bedding, backfill, and all appurtenances not itemized in the Bid Schedule.

1. Bid Schedule Payment Reference: **402.4.1.A.1**
2. Bid Schedule Description:
   Gate Valve – Size 10”…….each (EA).

END OF SECTION

SECTION 403
HYDRANTS

PART 2 - MATERIALS

Amend Part 2.2.A to read:

A. Waterous “Pacer” or Mueller “Centurion” Low Pressure Dry Barrel Break-flange or Safety-top Fire Hydrants: ANSI/AWWA C502.

Amend Part 2.2.A.2 to read:

2. Nozzle Configuration: Two 2-1/2 inch hose nozzels and one 4-1/2 inch pumper port with a 5 inch Storz hose nozzle.
   a. Manufacturer shall furnish the Storz nozzle.
   b. A Storz adapter will not be accepted.

Amend Part 2.2.A. to include:

8. Operating Nut: Shall open when turned counterclockwise.

Amend Part 2.2 to include:

B. Attached hydrant isolation valves to the tee at the main and restrain piping from the tee to the hydrant flanged fittings, retaining glands (mega lug, etc.) or tie rods.

Amend Part 2.3.A to read:

A. Hydrants shall be factory pained or painted by the contractor using high quality industrial enamel high intensity red paint above the ground line.

1. Spray can paint is prohibited.

Amend Part 2.6 to read:

2.6 CONCRETE THRUST BLOCKS

A. Concrete thrust blocks shall meet the requirements in Section 401.2.8 and ISPWC Standard Drawing SD-403.

PART 3 - WORKMANSHIP

Amend Part 3.2.2.A to read:

A. Install valves and appurtenances in accordance with manufacturer's recommendations and City standards.

1. Install hydrants to provide complete accessibility and minimize risk of damage from vehicles or injury to pedestrians.

2. Clear and maintain a three (3) foot space around the hydrant.

3. When located behind the curb, set hydrant barrel to face the pumper or hose nozzle cap two (2) feet from the back of the curb.

4. When located in the lawn space between the curb and sidewalk, or between sidewalk and property line, no portion of the hydrant or nozzle cap shall be within twelve (12) inches of the sidewalk.

5. Set all hydrants plumb and nozzles parallel with, or at right angles to the curb, with the pumper nozzle facing the curb.

6. Set hydrant with safety flange a minimum three (3) inches and maximum six (6) inches above finished ground or sidewalk level to clear bolts and nuts, and as directed.

7. Behind the hydrant:
   a. The ground surface shall be a minimum 4.5 feet above the hydrant base for a minimum 10 feet behind the back of the hydrant.

b. The City may approve a lesser bury requirement if thrust ties consist of two ¾ inch coated steel tie rods connecting the hydrant to the valve and the main.

8. Sides of the hydrant:
   a. The ground surface shall be a minimum 4.5 feet above the hydrant base for six (6) feet from the center line of the hydrant barrel.

9. Front of the hydrant:
   a. The ground surface shall be a minimum four (4) feet over the hydrant lateral pipe.

Amend Part 3.2 to include:

H. The Contractor is responsible for trench backfill, water main taps, and street patching in accordance with the ISPWC. City shall inspect and approve of the water main connection prior to backfilling. City shall be given a minimum 48-hour notice to when watermain connection will occur and shall have 48- hours to complete inspection of the connection.

I. All fire hydrants and waterlines to the fire hydrants become the City of Moscow's once installed and successfully tested. Twenty foot (20') wide public utility easements countered on and around the fire hydrant and the waterline to the fire hydrant shall be granted to the City.

J. Install guard posts, or equivalent, where hydrants are subject to impact by motor vehicles.

K. Disconnect improperly located hydrants at the Contractor's expense.

L. Replace over-excavated areas with gravel, and hand tamp to provide a unyielding foundation.

M. Place base block on firm level sub-base for uniform support.

N. Prevent damage to base block during hydrant installation.

O. Place temporary blocks to maintain hydrant in a plumb position during subsequent work.

P. All earthen fill shall be compacted full depth to a minimum 95% of AASHTO T-180 proctor value.

END OF SECTION

SECTION 601
CULVERT, STORM DRAIN AND GRAVITY IRRIGATION PIPE

PART 4 - MEASUREMENT AND PAYMENT

Amend Part 4.1 to include:

Dewatering, sleeves or other items necessary to meet non-potable crossing requirements as outlined in section 405, and all other items necessary to complete the work shall be incidental to the cost included in the unit bid price for the following bid items:

A. 12" Storm Drain Pipe, Class C-900 PVC: By the linear foot for the size, type and class of pipe specified measured along the horizontal centerline through all fittings and structures. This bid item includes all pipe, fittings, couplings, connections, end bevels, end sections, aprons, excavation, bedding, backfill and appurtenances not itemized in the Bid Schedule.

1. Bid Schedule Payment Reference: **601.4.1.A.5**
2. Bid Schedule Description:
   12" Storm Drain Pipe, Class C-900 PVC…….linear foot (LF).

END OF SECTION

SECTION 602
STORM DRAIN INLETS, CATCH BASINS, MANHOLES, AND GRAVITY IRRIGATION STRUCTURES

PART 4 - MEASUREMENT AND PAYMENT

Amend Part 4.1 to include:

A. Storm Drain Manhole - Type A: Per each. Includes furnishing and installing the drainage structure, frame, grate, cover, appurtenances, pipe connections, excavation, bedding, foundation, backfill, compaction, collars, testing, and all other items not itemized in the Bid Schedule.

1. Bid Schedule Payment Reference: **602.4.1.A.1**
2. Bid Schedule Description:
   Storm Drain Manhole – Type A…….each (EA).

F. Catch Basin - Type I: Per each. Includes furnishing and installing the drainage structure, frame, grate, cover, appurtenances, pipe connections, excavation, bedding, foundation, backfill, compaction, collars, testing, and all other items not itemized in the Bid Schedule.

1. Bid Schedule Payment Reference: **602.4.1.F.1**
2. Bid Schedule Description:
   Catch Basin – Type I…….each (EA).

END OF SECTION

SECTION 703
CAST-IN-PLACE CONCRETE

PART 4 - MEASUREMENT AND PAYMENT

Amend Part 4.1 to include:

A. Concrete (Cast-In-Place) by the cubic yard for class of concrete specified.

1. Bid Schedule Payment Reference: **703.4.1.A.1**
2. Bid Schedule Description:
   Concrete (Cast-In-Place) – Class 4000A…….cubic yard (CY).

END OF SECTION

SECTION 704
PRECAST CONCRETE

PART 1 – GENERAL

Add the following to Part 1.4 Design Requirements:

G. Design headwalls and wingwalls to withstand loads imposed by the pedestrian/bicycle and traffic railing as shown in the plans.

Remove Section B of Part 1.5 Submittals and replace with the following:

B. Submit shop drawings indicating layout, unit locations, fabrication details, unit identification marks, reinforcement, connection details (including pedestrian/bicycle and traffic railing connections to headwalls and wingwalls), support items, dimensions, openings, and relationship to adjacent materials.

PART 2 – MATERIALS

Add the following to Part 2.4 Fabrication:

D. Provide connections as detailed in submittals for the pedestrian/bicycle and traffic railing to connect to headwalls and wingwalls.

PART 4 - MEASUREMENT AND PAYMENT

Amend Part 4.1 to include:

A. Bridge – 24’ span x 11’ rise: By the lump sum as designated in the Bid Schedule. This bid item is for the structure from the top of pile caps to the top of headwalls and wingwalls and includes design, fabrication, reinforcement, concrete, imbedded items (including connections for pedestrian/bicycle and traffic rail), openings, delivery, installation, bearing pads, sealant, connection devices and

grouting for three-sided arch-type segments, headwalls, and wingwalls. It also includes design, reinforcement, ***cast-in-place concrete***, connections to precast concrete, and other items, if needed, for the full structural system to accommodate structure skew. Pedestrian/bicycle and traffic rail will be paid separately under item SP-3003.

1. Bid Schedule Payment Reference: **704.4.1.A.3**
2. Bid Schedule Description:
   Bridge – 24' span x 11' rise…….lump sum (LS).

END OF SECTION

SECTION 706
OTHER CONCRETE CONSTRUCTION

PART 1 – GENERAL

Amend Part 1 to include:

1.6 CURB, GUTTER, SIDEWALK, VALLEY GUTTER, DRIVEWAY APPROACH, PEDESTRIAN RAMPS, AND DETECTABLE WARNING DOMES

A. **Standard 6" Vertical Curb and Gutter** – Shall consist of installing Type 'B' – Combination Curb & Gutter as shown on City of Moscow Standard Drawing Number 6. The new curb and gutter is to transition and match the existing curb and gutter to a clean saw cut edge. Additional concrete used in the transition taper between the new 6" vertical concrete curb and gutter and existing curb and gutter will be paid out of the "Standard 6" Vertical Curb and Gutter" pay item. Dowels are required where new curb and gutter matches into existing and all-inclusive to the pay item.

B. **6" Vertical Curb (No Gutter), Type "A"** – Shall consist of installing Type "A" curb as shown on the plans. The new curb is to provide a barrier between vehicular and pedestrian traffic and be placed on top of proposed pavement as shown in plans. Transition taper for delineator placement as shown in the plans. Furnishing and installing delineators is incidental to this pay item.

C. **Concrete Sidewalk –** Shall consist of installing 5" thick concrete sidewalk as shown on the plans and City of Moscow Standard Drawing Number 7, including installation of base material, compaction, placing of concrete, and finishing concrete. 6" of crushed aggregate for base (Type I), and any other item associated with the installation of the sidewalk shall be considered incidental to the Concrete Sidewalk pay item. Dowels are required where new sidewalk matches into existing and all-inclusive to the pay item.

D. **Concrete Driveway Approach –** Shall consist of installing 6" thick concrete driveways as shown on the plans and City of Moscow Standard Drawing Number 9 – Type I Approach, including base material, compaction, placing of concrete, and finishing concrete. 6" of crushed aggregate for base (Type I), sign relocation, and any other item associated with the installation of the driveway

approach shall be considered incidental to the Concrete Driveway Approach pay item. Concrete panels beyond the top wing of the driveway approach shall be paid for under the Concrete Sidewalk pay item.

E. **Pedestrian Ramps with Truncated Dome Panels –** Shall consist of installing concrete pedestrian ramps with truncated dome panels as shown on the plans. 6" of crushed aggregate for base (Type I), compaction, formwork, concrete, finishing and any other item associated with the installation of the pedestrian ramp shall be considered incidental to the Pedestrian Ramp pay items. All forms and materials must be inspected and approved by the City prior to placing concrete. If the pedestrian ramp is installed without pre-approval, the City may require the ramp to be removed and re-installed at the contractor's expense. Any ramp not meeting the specifications of the approved plans or current ADA standards shall be removed and re-installed at the contractor's expense.

F. **Truncated Dome Panels -** Truncated dome panels shall be "Traffic Yellow" color, pre-manufactured units integrally cast into the concrete ramp in accordance with ISPWC SD-712A. Contractor shall provide a submittal of the proposed units to the City for approval. If a truncated dome panel is saw cut or broken and installed, the entire ramp must be removed and replaced at the contractor's expense. All forms and truncated dome panel materials must be inspected and approved by the City prior to placing concrete.

PART 4 - MEASUREMENT AND PAYMENT

Amend Part 4.1 to include:

A. 6 Inch Vertical Curb (No Gutter), Type "A": Payment for this item will be by the linear foot including forming, furnishing and installing or constructing joint devices and fillers, furnishing and installing delineators, furnishing and installing reinforcing steel (unless otherwise specified) miscellaneous embedded items, furnishing, placing, finishing, and curing concrete. Surface preparation, pavement drilling, and steel reinforcement are considered incidental to this item and all other items not itemized in the Bid Schedule.

1. Bid Schedule Payment Reference: **706.4.1.A.3**
2. Bid Schedule Description:
   6 Inch Vertical Curb (No Gutter), Type "A"…..…….linear foot (LF).

E. Concrete Sidewalk: Payment for this item will be by the square yard including forming, furnishing and installing or constructing joint devices and fillers, furnishing and installing reinforcing steel (unless otherwise specified) miscellaneous embedded items, furnishing, placing, finishing, and curing concrete. Excavation, backfill, 3/4" Type I base material, and compaction are considered incidental to this item and all other items not itemized in the Bid Schedule. Pay for Pedestrian Ramps is under this item, if not included as a separate Bid Item.

1. Bid Schedule Payment Reference: **706.4.1.E.1**
2. Bid Schedule Description:
   Concrete Sidewalks, Thickness 5"……..……..…….square yard (SY).

G. Concrete Driveway Approaches: Payment for this item will be by the square yard for the limits shown on the plans. Including forming, furnishing and installing or constructing joint devices and fillers, furnishing and installing reinforcing steel (unless otherwise specified) miscellaneous embedded items, furnishing, placing, finishing, and curing concrete. Excavation, backfill, 3/4" Type I base material, and compaction are considered incidental to this item and all other items not itemized in the Bid Schedule.

1. Bid Schedule Payment Reference: **706.4.1.F.1**
2. Bid Schedule Description:
   Concrete Driveway Approach (6" Thick)……square yard (SY).

END OF SECTION

SECTION 802
CRUSHED AGGREGATES

PART 4 - MEASUREMENT AND PAYMENT

Amend Part 4.1 to include:

B. Crushed Aggregate for Base Type I: By the Ton measured by truck tickets. Moisture in the aggregate greater than 7% will be deducted from payment. Includes furnishing, hauling, placing, blending, spreading, shaping, watering, and compacting the aggregate and all tools, labor equipment and appurtenances not itemized in the Bid Schedule. By the Ton measured by truck tickets.

1. Bid Schedule Payment Reference: **802.4.1.B.1**
2. Bid Schedule Description:
   Crushed Aggregate for Base Type I…….ton (TON).

Crushed Aggregate for Base Type II: By the Ton measured by truck tickets. Moisture in the aggregate greater than 7% will be deducted from payment. Includes furnishing, hauling, placing, blending, spreading, shaping, watering, and compacting the aggregate and all tools, labor equipment and appurtenances not itemized in the Bid Schedule. By the Ton measured by truck tickets.

1. Bid Schedule Payment Reference: **802.4.1.B.2**
2. Bid Schedule Description:
   Crushed Aggregate for Base Type II…….ton (TON).

END OF SECTION

SECTION 803
PLANT MIX AGGREGATES

PART 2 – MATERIALS

Part 2.1.E Production requirements; delete items 3 and 4 and replace with the following:

3. Flat aggregate particles not to exceed 8% by weight and elongated aggregate particles not to exceed 8% by weight.

4. Material may require screening and/or washing to eliminate excessive fines. No additional payment will be made for pre-screening or washing.

Part 2.2 Plant Mix Aggregate Gradation; add the following subparagraphs:

D. The fine Aggregate Angularity shall be 45, minimum.

E. Aggregate gradation will be accepted on gradations from the cold feed samples for crushing projects and from samples obtained from behind the paver on paving projects.

F. The target gradation, for multiple stockpile mixes, shall fall within the range listed for Superpave SP-3, 1/2 inch plant mix in the latest edition of the Idaho Transportation Department Standard Specifications for Highway Construction.

Part 2.3 Aggregate Control; delete subparagraphs A, B and C and replace with the following:

A. Consistency checks for percent passing on the sieves noted in Table 1 and Table 2 for samples taken from belt, loading/hauling equipment or from stockpiles.

B. Variation from as crushed stockpile average on 1" thru No. 8 sieves not to be greater than ± 5%. Variation from as crushed stockpile average on sieves smaller than No. 8 down to No. 50 sieve not to be greater than ± 3%. Variation from as crushed stockpile average on sieves smaller than the No. 50 not to be greater than ± 2.0%.

C. Target gradation for as crushed stockpile average shall fall within the gradation limits indicated in Tables 1 and 2 by, at least, the variations indicated in Item B.

END OF SECTION

SECTION 1103
CONSTRUCTION TRAFFIC CONTROL

PART 1 - GENERAL

Amend Part 1.1 to include:

B. **Temporary Traffic Control Plan:** The contractor shall prepare the traffic control plan for the project and submit it to the City for approval. The traffic control plan provided in the contract documents may be utilized by the contractor. Any revisions to the recommended traffic control plan must be approved by the City. The plan shall allow continuous access of local traffic to homes and businesses.

C. **Temporary Traffic Control:** The contractor shall furnish, erect, maintain and relocate as necessary traffic control devices and provide flagging as prescribed in the approved traffic control plan or as directed by the ENGINEER. The contractor shall retain ownership of all traffic control devices throughout the project and remove them when no longer needed.

D. **Temporary Traffic Control Signage:** Traffic Control Signage, Class B, is paid per square foot. Payment for each sign shall be made once and not duplicated for each zone. Requests for duplicated sign quantities will be denied.

PART 4 - MEASUREMENT AND PAYMENT

Amend Part 4.1 to include:

B. Traffic Control Signs, Class B. Per square foot for the types and sizes of signs specified in the plans.
   1. Bid Schedule Payment Reference: **1103.4.1.B.1**
   2. Bid Schedule Description:
      Traffic Control Signs, Class B…….. square foot (SF)

C. Traffic Control Barricades, Type III. Per each for the type of barricade specified.
   1. Bid Schedule Payment Reference: **1103.4.1.C.1**
   2. Bid Schedule Description:
      Traffic Control Barricades, Type III……..each (EA)

J. Traffic Control Maintenance. Per man-hour of approved maintenance during construction.
   1. Bid Schedule Payment Reference: **1103.4.1.J.1**
   2. Bid Schedule Description:
      Traffic Control Maintenance…….…….. man-hour (MNHR)

END OF SECTION

SP-3001
CONTRACTOR FURNISHED
CONSTRUCTION SURVEYING AND STAKING

PART 1 - GENERAL

A. **Work included:** This specification describes the Contractor's responsibilities for surveying and Field Engineering necessary to construct the work. The Work shall Consist of staking lines and grades for roadways, manholes, inlets, traffic control devices, and spotting for lane markings. It shall also include re-measurement or reestablishment work, as required, if the Engineer determines that any portion of the work has not been completed in conformity with line, grade and dimensions shown on the plans or as directed by the Engineer. The contractor is responsible to survey the existing asphalt grade prior to construction for verification of excavation quantities.

B. **Surveyor Qualifications:** All surveying and construction staking shall be under the direction and supervision of a qualified surveyor knowledgeable of construction surveying and volumetric calculation for the work described in this specification. The standard of care and knowledge of the surveyor shall be that of a licensed surveyor, but being licensed as a surveyor in the State of Idaho is not required or a prerequisite of the surveyor. The Contractor shall submit evidence and qualifications of the surveyor(s) competency to the Engineer for review and comment at the preconstruction conference and prior to commencing with any surveying or staking activities at the site.

PART 2 - MATERIALS

A. **Documentation and Records:** The Surveyor shall provide all field notebooks and forms to be used for construction staking. The field notebooks and forms shall become the property of the Engineer upon completion of the work. The field notebooks used for the work shall be made available to the Engineer upon request at any time during the execution of the work. Such request may be made verbally or in a written form and shall be complied with immediately by the Contractor or his Surveyor.

B. **Material and Equipment:** The Surveyor shall furnish all stakes, surveying equipment, and other devices necessary for establishing, setting, marking and maintaining the required control and reference points to construct the work. All lumber shall have the following minimum dimensions in inches:

Hubs	1"x2"x8"
Stakes	1"x2"x16"
Lath	½"x2"x48"

Plastic marking flagging and paint shall be highly visible type supplied in the colors of red, white, blue, yellow and orange.

PART 3 - WORKMANSHIP

3.1 CONSTRUCTION STAKING

A. **Surveying Control and Tolerances:** Construction staking by the Surveyor shall include the horizontal and vertical control points to set bench marks, right of way limits, culverts, sewer pipes, valley gutter, valve adjustments manholes, inlets, subgrade, base aggregates, retaining wall leveling pad, bridge foundations, piers, columns, abutments, superstructure and any other control or elevations deemed necessary for proper control to construct the work.

The positional tolerances for staking shall conform to the following guidelines:

Description	Vertical Tolerance	Horizontal Tolerance
Blue Tops	0.02+/- foot	N/A
R-W Markers	N/A	0.5 +/- foot
Slope Stakes	0.1+/- foot	0.1+/- foot

Paving Surfaces	0.02+/- foot	N/A
Bridge Structures	0.01+/- foot	0.05+/- foot

B. **Field Documentation Requirements:** Field notes shall be kept in a standard format on forms supplied by the Surveyor and acceptable to the Engineer. Lettering shall be at least 0.15 inch and legible from a distance of 1.5 feet. Errors shall be deleted by lining the errors out and erasures in the field notes will not be an acceptable practice of correcting errors. After completion and acceptance of the work, the Surveyor shall submit to the Engineer all survey and design data. Crew names, positions, and dates shall be recorded in the field books on the beginning sheet of each day's work. All notes, including the originals, shall be signed and sealed by the licensed Surveyor and become the property of the Engineer. The Surveyor is required to complete daily diaries detailing the work completed each day, along with people on the project. Copies of all field notes and diaries shall be submitted to the Engineer on a weekly basis or as directed by the Engineer.

C. **Surveyor Technician Requirements:** The Surveyor shall employ sufficient qualified personnel experienced in construction surveying to conduct the work as required. Supervision of such personnel is the responsibility of the Surveyor, and any error or omission by such personnel shall be corrected at the expense of the Contractor by his Surveyor. The Surveyor is responsible for the calculations of the grades and alignment for all staking. Any discrepancies in grade, alignment locations, and/or dimensions detected by the Surveyor shall immediately be brought to the attention of the Engineer. Major differences found between the horizontal or vertical alignment data shown on the plans and the alignment observed on the ground shall be referred to the Engineer immediately. Staking of these areas shall be deferred until these differences are reconciled by the Engineer. The Surveyor shall compare the staked centerline cut and fill depth with the design data. Differences exceeding one foot at any two or more consecutive points shall be reported to the Engineer for possible evaluation and correction.

D. **Construction Staking Requirements and Criteria:** The Engineer may check the accuracy of the Surveyor's construction stakes, lines, grades and layouts, but will not assume responsibility for the accuracy of the final result of the construction stakes, lines, grades and layouts. All stakes shall be legibly marked with a stake pencil that leaves a depression or a waterproof black marker. The top two inches of all slope, guard, reference, clearing and structure stakes shall be painted or marked with plastic flagging. Stakes shall be painted or marked with the following colors:

TYPES OF STAKES	COLORS
Right of Way	Yellow
Control Points	Red/White/Blue
Misc. Stakes	Red/White
Slope Stakes	White
Conduit Stakes	Orange/White
Centerline Stakes	Red
Reference Points/Easements	Orange

The Contractor and Surveyor shall maintain and protect all construction stakes and marks until the work is completed and accepted by the Engineer. In the event that the construction staking or control points are obliterated during the execration of the work the Surveyor shall establish or reestablish all construction stakes and controls points, as necessary.

Minimum Control Points

P.I.	Point of Intersection of Tangents
P.C.	Point of Curvature
P.O.C.	Point on Curve
P.T.	Point of Tangency
P.O.T.	Point on Tangent
R.P.	Reference Point
B.M.	Bench Mark
T.B.M.	Temporary Bench Mark

E. Surveying Control Items (minimum requirements)

1. **Vertical Control:** Bench marks established for the project by the Owner shall be checked and/or reestablished by the Surveyor. Benchmarks falling within the clearing limits of the project shall be reset in a safe location by the Surveyor. After resetting any a level circuit meeting the precision of the original survey shall be run to all benchmarks and datum elevations computed and/or checked.

2. **Horizontal Control:** Centerline stakes shall be set at 50-foot intervals (including all 100-foot stations), at significant breaks in the ground, at conduit locations, at P.C.'s and P.T.'s, points of radiuses, and at approaches. Stakes shall be marked with appropriate identification or location on the side of the stake facing the initial station on the project.

3. **Cross-Sections:** Cross-section measurements, original and re-measure, shall be taken at locations necessary for computing pay items that require volume calculations. This data shall be computed, checked, and plotted into cross-section format using both the original and re-measured section data by the Surveyor and signed and sealed by the Surveyor. The purpose of these cross-sections is for measurement and payment of quantities. The Surveyor shall compute the earthwork cut and fill volume quantities and submit these calculations to the Engineer to support the respective progress payment request by the Contractor.

4. **Finishing Stakes:** Finishing stakes shall be set when subgrade or base course is within 0.2 foot of the final grade. The stakes shall be set to the nearest 0.02 foot of the measured grade line. Finishing stakes shall be required for all surfaces requiring finish grading including (but not limited to) subgrade, base courses, approaches, and pavement surfaces as required. Finishing stakes shall be hubs placed transversely on the roadway template line at 12-foot intervals, in addition to centerline and at each shoulder. The finishing stakes shall be marked with guard stakes or with plastic blue top flags or chasers.

5. **Miscellaneous Staking:** Staking will be required for location and installation of storm drain facilities, bridge structure, riprap, and curb and gutter.

PART 4 - MEASUREMENT AND PAYMENT

A. Contractor Furnished Construction Survey and Staking. The lump sum payments by bid schedules for Contractor Furnished Construction Surveying and Staking services shall be full compensation for all cost associated for furnishing labor, tools, equipment and materials necessary for the setting, maintaining and verifying the alignment, grade and quantities as specified and shown on the plans, including all mobilization, surveying traffic control, and demobilization cost.

1. Bid Schedule Payment Reference: **SP - 3001**
2. Bid Schedule Description:
   Contractor Furnished Construction Surveying and Staking…….lump sum (LS)

END OF SECTION

SP-3002
HELICAL PULLDOWN MICROPILE (HPM)

PART 1 - GENERAL

1.1 SUMMARY

A. This work shall consist of furnishing and installing helical pulldown micropiles (HPM). The HPM Contractor is responsible for furnishing all materials, products, accessories, tools, equipment, services, transportation, labor and supervision, and manufacturing techniques required for HPM installation and testing and connections.

1.2 SPECIAL CONSIDERATIONS

A. The following conditions require special attention:

1. Fill soil with various deleterious materials may be encountered. Use appropriate installation methods to stabilize the holes. Preclude downdrag loads on HPMs due to future fill settlement.

2. Groundwater will be encountered during drilling and HPM installation. Use appropriate installation methods to stabilize the holes.

3. Install HPMs so that ground loss or densification and resulting settlement does not damage existing or proposed structures, pavements, utilities, or other facilities to remain.

1.3 DEFINITIONS

A. Admixture: Substance added to the grout to control bleed and/or shrinkage, improve flowability, reduce water content or retard setting time.

B. Bond Length: The length of the HPM that is bonded to the ground and used to transfer the applied axial loads to the surrounding soil. Also known as the load transfer length or bond zone.

C. Centralizer: A device to support and position the central reinforcing steel in the drill hole and/or so that a minimum grout cover is provided.

D. Creep Movement: The movement that occurs during the creep test of a HPM under constant load.

E. Design Load (DL): The maximum unfactored load expected to be applied to the HPM during its service life.

F. Extension Displacement Plate (EDP): A device to centrally locate the steel shaft within the annular volume and to assist in the downward flow of grout.

G. GeoProfessional Innovation (GPI): Project design geotechnical engineer.

H. Helical Extension: Helical pier component installed immediately following the lead section. This component consists of one or more helical plates welded to a central steel shaft.

I. Helical Pulldown Micropile: A small diameter, soil displacement, cast-in-place screw pier, in which most of the applied load is resisted by the central steel shaft. Load transfer to soil is both end bearing and friction. United States Patent 5,707,180, Method and Apparatus for Forming Piles In-Situ.

J. Helical Plate: Generally round steel plate formed into a ramped spiral. The helical shape provides the means to install the screw pier, plus the plate transfers load to soil in end-bearing. Helical plates are available in various diameters and thicknesses.

K. Lead Section: The first screw pier component installed into the soil, consisting of single or multiple helical plates welded to a central steel shaft. Helical plates provide end-bearing capacity.

L. Overburden: Material, natural or placed, that may require cased drilling methods to provide an open borehole to underlying stratigraphy.

M. Plain Extension: Central steel shaft without helical plates. It is installed following the installation of the lead section and helical extension. The units are connected with integral couplings and bolts. Plain extensions are used to extend the helical plates beyond the specified minimum depth and into competent load bearing stratum.

N. Grout: Portland-cement-based grout pressure-injected or gravity-transferred into the HPM hole after installing reinforcement to direct the load transfer to the surrounding ground along the HPM.

O. Reinforcement: The steel component (center bar) of the HPM that accepts and/or resists applied axial compression and tension loadings.

P. Tolerable Settlement: Vertical deflections experienced by the HPM group at the connection with the pile cap under the anticipated service loading conditions.

Q. Ultimate Load Transfer Rate: The estimated ultimate geotechnical grout-to-ground load transfer selected for use in design. Also known as the ultimate bond strength. A factor-of-safety is applied to this value to obtain the allowable load transfer rate shown on the Project Plans.

R. Water: Water used in the grout mixture shall conform to AASHTO T26 and shall be potable, clean and free from substances that may be injurious to cement and steel.

1.4 REFERENCES

A. Standards listed by reference, including revisions by issuing authority, form a part of this specification section to the extent indicated. Standards listed are identified by issuing authority, authority abbreviation, designation number, title, or other designation established by issuing authority. Standards subsequently referenced herein are referred to by issuing authority abbreviation and standard designation. In case of conflict, the particular requirements of this specification shall prevail. The latest publication as of the issue of this specification shall govern, unless indicated otherwise.

1. ASTM International (ASTM):

a. ASTM A29/A29M Steel Bars, Carbon and Alloy, Hot-Wrought and Cold Finished.
b. ASTM A36/A36M Structural Steel.
c. ASTM A53 Pipe, Steel, Black and Hot-Dipped, Zinc-Coated Welded and Seamless.
d. ASTM A153 Zinc Coating (Hot Dip) on Iron and Steel Hardware.
e. ASTM A775 Electrostatic Epoxy Coating
f. ASTM A193/A193M Alloy-Steel and Stainless Steel Bolting Materials for High Temperature Service.
g. ASTM A252 Welded and Seamless Steel Pipe Piles.
h. ASTM A320/A320M Alloy-Steel Bolting Materials for Low Temperature Service.
i. ASTM A500 Cold-Formed Welded and Seamless Carbon Steel Structural Tubing in Rounds and Shapes.
j. ASTM A572 HSLA Columbium-Vanadium Steels of Structural Quality.
k. ASTM A618 Hot-Formed Welded and Seamless High-Strength Low-Alloy Structural Tubing.

l. ASTM A656 Hot-Rolled Structural Steel, High-Strength Low-Alloy Plate with Improved Formability.
m. ASTM A1018 Steel, Sheet and Strip, Heavy Thickness Coils, Hot Rolled, Carbon, Structural, High-Strength, Low-Alloy, Columbium or Vanadium, and High-Strength Low-Alloy with Improved Formability.
n. ASTM C33 Concrete Aggregates.
o. ASTM C109 Compressive Strength of Hydraulic Cement Mortar.
p. ASTM C150 Portland Cement.
q. ASTM C494 Chemical Admixtures for Concrete.
r. ASTM C618 Coal Fly Ash and Raw or Calcined Natural Pozzolan for Use as a Mineral Admixture in Concrete
s. ASTM C1240 Silica Fume for Use as a Mineral Admixture in Hydraulic-Cement Concrete, Mortar, and Grout
t. ASTM C1107 Packaged Dry, Hydraulic-Cement Grout (Nonshrink)
u. ASTM D1143 Method of Testing Piles Under Static Axial Compressive Load.
v. ASTM D1784 Specification for Rigid Poly Vinyl Chloride (PVC) Compounds and Chlorinated Poly Vinyl Chloride (CPVC) Compounds.
w. ASTM D1785 Specification for Poly(Vinyl Chloride) (PVC) Plastic Pipe, Schedules 40, 80, and 120.
x. ASTM D3034 Specification for Type PSM Poly(Vinyl Chloride) (PVC) Sewer Pipe and Fittings.
y. ASTM D3689 Method of Testing Individual Piles Under Static Axial Tensile Load.
z. ASTM D3966 Standard Test Method for Piles Under Lateral Load.

2. American Welding Society (AWS):
   a. AWS D1.1 Structural Welding Code – Steel.
   b. AWS D1.2 Structural Welding Code – Reinforcing Steel.

3. American Society of Civil Engineers (ASCE):
   a. ASCE 20-96 Standard Guidelines for the Design and Installation of Pile Foundations.

4. Deep Foundations Institute (DFI):
   a. Guide to Drafting a Specification for High Capacity Drilled and Grouted Micropiles for Structural Support, 1st Edition, Copyright 2001 by the Deep Foundation Institute (DFI).

5. Post Tensioning Institute (PTI):
   a. Recommendations for Prestressed Rock and Soil Anchors, Third Edition, Copyright 1996 By the Post-Tensioning Institute.

6. Society of Automotive Engineers (SAE):
   a. SAE J429 Mechanical and Material Requirements for Externally Threaded Fasteners.

7. GPI Geotechnical deliverable dated October 2, 2020.

8. Project Plans prepared by J-U-B.

1.5 CONSTRUCTION SITE SURVEY

A. The HPM Contractor shall review the available subsurface information and visit the site to assess the site geometry, equipment access conditions and location of existing structures and above ground facilities, prior to the Bid.

B. The HPM Contractor is responsible for field locating and verifying all utility locations shown on the plans prior to starting the Work. Maintain uninterrupted service for utilities. Notify the General Contractor and the Owner of any utility locations differing from those shown on the plans.

C. Prior to starting HPM construction activity, the HPM Contractor shall inspect the site to observe and document the site's pre-construction condition, existing structures and facilities.

D. During construction, the Contractor shall observe the conditions in the vicinity of the HPM construction site on a daily basis for signs of ground heave or subsidence. Immediately notify the General Contractor and Owner if signs of movement are observed. The Contractor shall immediately suspend or modify operations if ground heave or subsidence is observed, if the HPM structure is adversely affected, or if adjacent structures are damaged from the drilling or grouting. If the Owner or General Contractor determines that the movements require corrective action, the HPM Contractor shall take corrective actions necessary to stop the movement or perform repairs. When due to the HPM Contractor's methods or operations or failure to follow the design specified/approved construction sequence, as determined by the General Contractor or Owner, the costs of providing corrective actions will be borne by the HPM Contractor.

1.6 SUBMITTALS

A. The HPM Contractor shall prepare and submit documentation illustrating qualifications to complete the work specified herein. This documentation shall show:

1. The HPM Contractor and their proposed site personnel are experienced in HPM construction and load testing and have successfully constructed at least 3 projects involving construction of similar or greater capacity than required in these plans and specifications.

2. Brief summaries of 3 completed projects, similar in scope and scale to this project, including a brief project description, HPM installation records and load test results with the project owner's names and current phone numbers.

3. The HPM Contractor shall also submit a personnel list for the quality control representative, drill rig operators and on-site foreman to be assigned to the project.

B. The HPM Contractor shall prepare and submit to the General Contractor and Owner for review of completeness, the following for the HPM system to be constructed:

1. Detailed description of the proposed HPM construction procedure and equipment proposed. This description shall include sufficient detail to allow the Owner's representative to monitor the construction and quality of the HPMs.

2. Proposed start date for HPM installation and testing schedule providing the following:
   a. HPM numbering system
   b. HPM vertical design capacity
   c. Methods for HPM installation and grout placement
   d. Methods and equipment for soil cutting and water removal during drilling
   e. Methods for removing water displaced by grout placement

3. Manufacturer's information, model, size and type of equipment to be used for installing HPMs, with appropriate manufacturer's literature for review. Include detailed description of the drilling equipment and methods proposed to provide drill hole support and prevent detrimental ground movements.

4. Information on headroom and space requirements for installation equipment access that verify that the proposed equipment can perform at the site. Plan describing how surface water, drill flush, cuttings, and excess waste grout will be controlled and disposed.

5. Certified mill test reports for steel components. The ultimate strength, yield strength, elongation and material properties composition shall be included.

6. Proposed Grouting Plan. The grouting plan shall include complete descriptions and details for the following:

   a. Grout mix design and type of materials to be used in the grout including certified test data and trial batch reports. If alternate mix designs are considered, resubmit and obtain approval of proposed changes to grout mix proportions. Provide written verification that proposed admixtures are compatible.
   b. Grouting equipment, including capacity and relation to the grouting demand and working conditions as well as provisions for back-up equipment and spare parts. A high-speed colloidal mixer shall be used if grout is mixed on site.
   c. Methods and equipment for accurately monitoring and recording the grout depth, grout volume as the grout is being placed.
   d. Contingency procedures for handling blockage of ducts/hoses or equipment breakdowns.
   e. Estimated curing time for grout to achieve specified strength. Previous test results for the proposed grout mix completed within

one year of the start of grouting may be submitted for initial verification and acceptance and start of production work. During production, grout shall be tested in accordance with the requirements of these specifications.

f. Procedure for Contractor monitoring of grout quality.

7. Detailed plans and descriptions of the proposed methods for axial HPM load testing. Include all necessary drawings, calculations and details to clearly describe the equipment and methods proposed to achieve the test requirements delineated in this specification. At a minimum, delineate the following information in the load testing program;

   a. Apparatus for measuring the load.
   b. Proposed load test forms
   c. Apparatus for applying the load.
   d. Apparatus for measuring the HPM deformation.
   e. Type, size and dimensions of reaction to load system.

8. Calibration reports and data for each test jack, pressure gauge, master pressure gauge and dial (or displacement) gauges to be used. The calibration tests shall have been performed within 30 calendar days of the date submitted. Do not commence with testing until the proposed jack, pressure gauge, master pressure gauge, and dial (or displacement) gauges have been approved.

C. Work shall not begin and materials shall not be ordered until the construction submittals have been received, reviewed and accepted in writing by the General Contractor and Owner. Provide submittal items at least 14 calendar days prior to initiating HPM construction. The HPM Contractor shall allow the General Contractor and Owner 14 calendar days to review the construction submittals after a complete set has been received. Additional time required due to incomplete or unacceptable submittals shall not be cause for delay or claims for time or expense. The Owner may suspend the Work if the HPM Contractor uses non-approved personnel. If work is suspended, the HPM Contractor shall be fully liable for all resulting costs and no adjustment in Contract Time will result from the suspension. All costs associated with incomplete or unacceptable submittals shall be the responsibility of the HPM Contractor.

1.7 PRE-CONSTRUCTION MEETING

A. A pre-construction meeting will be scheduled by the General Contractor and Owner and held prior to the start of HPM construction. The Owner, General Contractor, HPM Contractor, excavation subcontractor and geotechnical engineer personnel shall attend the meeting. The pre-construction meeting will be conducted to clarify the construction requirements for the work, to coordinate the construction schedule and activities, and to identify contractual relationships and delineation of responsibilities amongst the prime Contractor and the various Subcontractors – specifically those pertaining to excavation for HPM structures, anticipated subsurface conditions, HPM installation and testing, HPM structure survey control, site drainage control, and quality assurance.

1.8 QUALITY ASSURANCE

A. Refer to Section 3.9 Grout Testing for field grout quality control.

B. All HPM installations and testing shall be observed full-time by the Owner's representative. HPM lengths may be adjusted in the field to accommodate subsurface soil conditions encountered, however additional tests may also be required for quality assurance purposes on modified configurations and the minimum torque and length achieved.

C. Conduct layout work for each HPM before excavation. Measure and report actual measurements for each HPM's horizontal axial location, diameter, bottom and top elevations, deviations for specified tolerances and other data required. Record and maintain information pertinent to each HPM and cooperate with testing and inspection personnel to provide data for required reports.

PART 2 – MATERIALS

2.1 GENERAL

A. The following product specifications are intended to provide general standards that exist in the area and for materials readily available for this project. Design will designate actual material requirements for HPMs referencing the minimum standards below. The HPM Contractor shall furnish materials new and without defects. Defective materials shall be replaced at no additional cost. Materials for HPMs shall consist of the following:

1. Central Steel Shaft:

   a. The central steel shaft, consisting of lead sections, helical extensions, and plain extensions, shall be Type SS-200 as manufactured by the A. B. Chance Company (Centralia, MO).
   b. SS-200 2.0" Material: Shall be hot rolled Round-Cornered-Square (RCS) solid steel bars meeting the dimensional and workmanship requirements of ASTM A29. The bar shall be High Strength Low Alloy (HSLA), low to medium carbon steel grade with improved strength due to fine grain size.
   c. Torsional strength rating: SS-200 = 16,000 ft-lb
   d. Minimum yield strength = 90 ksi

2. Helical Bearing Plate:

   a. Shall be hot rolled carbon steel sheet, strip, or plate formed on matching metal dies to true helical shape and uniform pitch. Bearing plate material shall conform to the following ASTM specifications: SS-200 Material: Per ASTM A656 or A1018 with minimum yield strength of 80 ksi. Plate thickness is 1/2".

3. Bolts:

a. The size and type of bolts used to connect the central steel shaft sections together shall conform to the following ASTM specifications: SS-200 2” Material: 3/4” diameter bolt per ASTM A193 Grade B7 and nut.

4. Couplings:

a. Shall be formed as integral part of the plain and helical extension material. The couplings shall be hot upset forged sockets.

5. Displacement Plates/Centralizers

a. Displacement plates (lead or extension plates) shall be fabricated from steel and not affect the structural integrity of the central steel shaft or grout column.

6. Plates, Shapes, or Pier Caps:

a. Structural steel plates and shapes for HPM top attachments shall conform to ASTM A36 or ASTM A572 Grade 50.

7. Water

a. Water for mixing grout shall be potable, clean and free from impurities, which may be detrimental to grout or steel. Potable water shall be available in quantities sufficient to mix grout and for equipment clean-up.

8. Cement

a. Cement for HPM grout shall be Portland cement conforming to ASTM C150 Type I or Type II. Pre-packaged, non-shrink cement grouts shall be subject to the review and acceptance of the Owner, and shall conform to the requirements of ASTM C1107.

9. Admixtures

a. Chemical admixtures for grout shall conform to the requirements of ASTM C494. Chemical admixtures which control bleed water, improve consistency, reduce water/cement ratio, and retard set may be used in the grout subject to the review and acceptance of the Owner. Expansive admixtures can be used to fill confined areas of the central steel shaft coupling joints, or to compensate for drying shrinkage. Accelerators shall not be permitted. Chemical admixtures, if used, shall be compatible with the central steel shaft and mixed in accordance with the grout manufacturer’s recommendations.

10. Aggregate

a. Sand fillers may not be used in the grout mix.

11. Corrosion Protection

a. Galvanization: All A. B. Chance Type SS material which is not completely encased in cement grout or concrete, shall be hot-dipped galvanized in accordance with ASTM A153 after fabrication. All A.B. Chance Type HS material shall be hot-dipped galvanized in accordance with ASTM A123 after fabrication.

PART 3 – WORKMANSHIP

3.1 SITE DRAINAGE CONTROL

A. The HPM Contractor shall control and properly dispose of drill fluid and construction related waste, including excess grout, in accordance with all applicable local codes and regulations. Provide positive control and discharge of all surface water that will affect construction of the HPM installation. Maintain all pipes or conduits used to control surface water during construction. Repair damage caused by surface water at no additional cost. Upon substantially completing the work, remove surface water control pipes or conduits from the site. Alternatively, with the approval of the General Contractor and Owner, pipes or conduits that are left in place may be fully grouted and abandoned or left in a way that protects the structure and all adjacent facilities from migration of fines through the pipe or conduit and potential ground loss.

3.2 EXCAVATION

A. The HPM Contractor shall coordinate the work and the excavation so the HPM structures are safely constructed. Perform the HPM construction and related excavation in accordance with the Plans and approved submittals.

3.3 HPM ALLOWABLE CONSTRUCTION TOLERANCES

A. Centerline of HPMs shall not be more than 1 inch from horizontal plan location.

B. HPMs shall be plumb within 2 percent of planned alignment.

C. Top elevation of HPMs shall be plus or minus 1 inch maximum from vertical elevations indicated on the plans.

3.4 SITE CONDITIONS

A. Prior to commencing HPM installation, the HPM Contractor shall inspect the work of all other trades and verify that all said work is completed to the point where HPMs may commence without restriction.

B. In the event of a discrepancy, the HPM Contractor shall notify the General Contractor and the Owner. The HPM Contractor shall not proceed with HPM installation in areas of discrepancies until said discrepancies have been resolved. All costs associated with unresolved discrepancies shall be the responsibility of the General Contractor.

3.5 INSTALLATION EQUIPMENT

A. Shall be rotary type, hydraulic power-driven torque motor with clockwise and counter-clockwise rotation capabilities. The torque motor shall be capable of continuous adjustment to revolutions per minute (RPM's) during installation. Percussion drilling equipment shall not be permitted. The torque motor shall have torque capacity 15% greater than the torsional strength rating of the central steel shaft to be installed.

B. Equipment shall be capable of applying adequate down pressure (crowd) and torque simultaneously to suit project soil conditions and load requirements. The equipment shall be capable of continuous position adjustment to maintain proper HPM alignment.

3.6 INSTALLATION TOOLING

A. Shall consist of a Kelly Bar Adapter (KBA) and Type SS or HS drive tool as manufactured by A.B. Chance Company and used in accordance with the manufacturer's written installation instructions.

B. A torque indicator shall be used during HPM installation. The torque indicator can be an integral part of the installation equipment or externally mounted in-line with the installation tooling, and:

1. Shall be capable of providing continuous measurement of applied torque throughout the installation.

2. Shall be capable of torque measurements in increments of at least 500 ft-lb

3. Shall be calibrated prior to pre-production testing or start of work. Torque indicators which are an integral part of the installation equipment, shall be calibrated on-site. Torque indicators which are mounted in-line with the installation tooling, shall be calibrated either on-site or at an appropriately equipped test facility. Indicators that measure torque as a function of hydraulic pressure shall be calibrated at normal operating temperatures.

4. Shall be re-calibrated, if in the opinion of the Owner and/or Contractor reasonable doubt exists as to the accuracy of the torque measurements.

3.7 INSTALLATION PROCEDURES

A. Central Steel Shaft:

1. The HPM installation technique shall be such that it is consistent with the geotechnical, logistical, environmental, and load carrying conditions of the project.

2. The lead section shall be positioned at the location as shown on the working drawings. The HPM sections shall be engaged and advanced

into the soil in a smooth, continuous manner at a rate of rotation of 5 to 20 RPM's. Extension sections shall be provided to obtain the required minimum overall length and installation torque as shown on the working drawings. Connect sections together using coupling bolt and nut torqued to 40 ft-lb

3. Sufficient down pressure shall be applied to uniformly advance the HPM sections approximately 3 inches per revolution. Adjust the rate of rotation and magnitude of down pressure for different soil conditions and depths.

4. A lead displacement plate (LDP) at least 7-inches in diameter shall be positioned on the central steel shaft at the location necessary to install the grout column as shown on the working drawings. The LDP shall not be located closer than 12 inches above the top helical plate. Additional LDP's or extension displacement plates (EDP) shall be positioned on the central steel shaft at regular intervals, typically at every coupling joint. Displacement plates shall not be spaced more than 7-feet. apart. Displacement plates shall permit the free flow of grout without misalignment of the central steel shaft.

B. Grout

1. Grout shall be mixed with equipment capable of providing a steady supply at the required level of production. The water – cement ratio for neat cement grouts is typically between 0.4 and 0.5. When using a pre-packaged grout, the recommended water-cement ratios listed in the mixing instructions on the package shall be followed.

2. The grout shall be placed via a gravity fed reservoir located at the surface. The reservoir shall consist of a temporary casing or form, which is capable of containing liquid grout. The reservoir shall be appropriately sized (diameter and length) to accommodate the soil conditions and grout column diameter. The grout shall be placed in reservoir immediately prior to advancing the first LDP into the soil. The grout volume contained in the reservoir shall be maintained at a level sufficient to maintain positive hydrostatic pressure on the grout column.

3. Grout placement shall continue until the minimum grout column length has been achieved as shown on the working drawings. Volume measurements shall be taken throughout the installation in order to determine the actual grout column diameter.

4. Unless approved design designates otherwise, neat cement mixture with a minimum 3-day compression strength of 2,500 psi and a minimum 28-day compressive strength of 4,000 psi per AASHTO T106/ASTM C109. Limit water-soluble chloride-ion content in hardened concrete to 0.15 percent by weight of cement. Grout minimum design strength shall be verified prior to being loaded.

3.8 TERMINATION CRITERIA

A. The torque as measured during the installation shall not exceed the torsional strength rating of the central steel shaft.

B. The minimum installation torque is 15,000 foot-pounds. The minimum installation depth is 20-feet, below the plie cap bearing elevation to the trailing helix. If the required torque is not achieved at the minimum 20-foot embedment depth, extend HPM's until torque is achieved, or to create a grouted bond length of 50-feet below the pile cap base. HPMs must bear in undisturbed native soil. Both torque and overall length criteria shall be satisfied prior to terminating the HPM, except as described below:

1. If the torsional strength rating of the central steel shaft and/or installation equipment has been reached prior to achieving the minimum overall depth required, the Contractor shall remove the HPM and install a new HPM to achieve the required installation conditions. Alternative configurations shall be subject to review and acceptance of the Owner. If re- installing in the same location, the top-most helix of the new HPM shall be terminated at least 5 feet beyond the terminating depth of the original HPM.

2. If the minimum 15,000 ft-lb installation torque is not achieved at the minimum specified length, the Contractor may extend the HPM to a sufficient depth to achieve the minimum required installation torque, or to refusal on suitable bearing material. Pier refusal on suitable bearing material must be evaluated by GPI and is defined as less than one-inch (1") vertical pier penetration after five (5) minutes of consistent drilling and downward force.

3. If the HPM is refused or deflected by a subsurface obstruction which is not considered suitable bearing material by GPI, the installation shall be terminated and the HPM removed. The obstruction shall be removed, if feasible, and the HPM re-installed. If obstruction can't be removed, the HPM shall be installed at an adjacent location within 1 foot of the previous location, subject to review and acceptance of the General Contractor and Owner.

3.9 GROUT TESTING

A. In addition to the testing requirements of the Contractor and in order to provide Quality Assurance, during production, HPM grout shall be tested by the Owner for compressive strength referencing AASHTO T106/ASTM C109 at a frequency of no less than one set of 3, grout samples each day of operation. The compressive strength shall be the average of the 3 samples, tested at 28 days.

3.10 AXIAL LOAD TESTS

A. One (1) performance axial load test in compression shall be conducted on production HPMs at the onset of construction. The performance test shall be conducted in compression to 150 percent of the design load. The HPM Contractor, General Contractor and GPI shall agree on the test location.

B. Conduct axial load tests in accordance with ASTM D1143 and as specified herein.

C. Provide testing equipment with movement-measuring devices with a sensitivity of 0.001 inches of displacement. Provide a minimum of 2 movement-measuring devices each with a minimum travel of at least 6 inches. Align the dial gauges so that their axes are within 5 degrees of the axis of the HPM being tested. Use a hydraulic jack and pump to apply the test load. Use a jack and pressure gauge calibrated by an independent testing laboratory within 30 days as a unit with the pressure gauge graded to allow 10-kip increments. Use the pressure gauge to measure the applied load. Use a jack with ram travel not less than 6 inches. Independently support the jack and center it over the HPM so that the HPM does not carry the weight of the jack. Keep a calibrated master pressure gauge at the site. Calibrate the test jack and pressure gauge with the master gauge. Measure the HPM top movement (elongation of central reinforcing bar).

D. Minimize disturbance to ground surface when placing and removing blocking.

E. Load the test HPM in intervals specified herein until the required test load is reached, or until the HPM exhibits continuous movement at constant load. Proportion any associated steel testing apparatus such that the maximum stress does not exceed 80% of the guaranteed ultimate tensile strength of the steel (GUTS). Position the jack at the beginning of the test such that unloading and repositioning of the jack during the test will not be required.

F. After grout compressive strength tests show HPM grout has achieved sufficient strength to withstand load testing (as determined by the HPM design engineer), perform the HPM performance tests by incrementally loading the HPM in accordance with the following requirements.

1. HPMs shall be loaded in 25% increments of the allowable design load to 150% of design in accordance with Table 1 below.

2. An acceptable test results when vertical movement of the pier results in less than 0.5 inches between one log cycle (6 to 60 minutes) under the test load.

3. Failing piers shall be corrected prior to continuing remaining pier installation.

4. If a failing test results, additional piers shall be tested, as determined by the Owner, J-U-B and GPI.

Table 1: Performance Axial Load Testing Schedule

Load Increment	Hold Time (min)	Time of Reading
0.00DL	0	None
0.25DL	5	5
0.50DL	5	5
0.75DL	5	5
1.00DL	5	5
1.25DL	5	5
1.50DL	60	1
		2
		3
		4
		5
		6
		10
		20
		30
		40
		50
		60

G. If a HPM fails load testing due to installation difficulties, modify the construction procedure and reinstall. Modifications may include installing replacement HPMs, modifying the installation methods, increasing the bond length, or changing the HPM type. General Contractor and Owner approval is required for modification that requires changes to the installation and testing procedures. Any modifications of design or construction procedures shall be at the Contractor's expense. Additional testing will be required if a performance test HPM fails and this testing shall be at the HPM Contractor's expense.

H. The General Contractor and Owner reserve the right to require additional load tests during production due to variable conditions, unusual soil profiles or changed installation means,methods, or configurations. Additional performance tests due to changed means, methods or configurations will be paid by the General Contractor unless previous performance tests failed.

I. If HPM performance tests pass, the HPM can be used as a production HPM.

3.11 HPM INSTALLATION RECORDS

A. HPM Contractor shall prepare and submit to the General Contractor and Owner full-length installation records for each HPM installed. The records shall be submitted within the same work shift that HPM installation is completed. A separate log shall be provided for each HPM. GPI shall also maintain and verify these records. The records shall include:

1. HPM number and location.
2. HPM design load.
3. Type and size of helical pier and grout column.
4. Actual HPM top and bottom elevations.

5. Total bond length.
6. Total HPM length.
7. Description of unusual installation behavior or conditions.
8. Other data that may be useful in evaluating the HPMs.
9. Grout take quantities pumped into the HPMs.
10. Amount and location of groundwater encountered.
11. Any deviations from the dimensions or locations shown on the drawings.
12. Time and dates of drilling and grouting HPMs.

PART 4 - MEASUREMENT AND PAYMENT

A. Helical Pulldown Micropile (HPM). Measurement and payment shall be per each installed and accepted per the requirements in this specification and shown on the plans. The contract price for HPM installation and load testing shall be estimated based on a 35-foot grouted column installation depth (below the pier cap base elevation), with a unit price additive or deductive for each 3-foot increment greater or less than the estimated installation depth. The "each" unit price and "additive/deductive" unit price for HPMs shall include all labor, materials, equipment, tooling, mobilization, load testing, and any other appurtenant items required to design, construct and test HPMs as required herein and as shown on the plans. The HPM Contractor is also responsible for estimating grout take. There will be no extra payment for grout overruns.

1. Bid Schedule Payment Reference: **SP-3002**
2. Bid Schedule Description:
   Helical Pulldown Micropile (HPM)……..…. each (EA).

END OF SECTION

SP-3003
PEDESTRIAN/BICYCLE AND TRAFFIC RAILING

PART 1 - GENERAL

1.1 SECTION INCLUDES

A. This consists of constructing Pedestrian/Bicycle and Traffic Railing on the headwalls and wingwalls as shown in the plans. Construct railing in accordance with ITD Bridge Standard Drawings B13.3A and B13.3C and 2018 ITD Standard Specifications for Highway Construction Sections 502 – Concrete, 503 – Metal Reinforcement, and 504 – Structural Metals. Connection details to headwalls and wingwalls will be provided in Pay Item 704.4.1.A.3.

1.2 RELATED SECTIONS

A. Section 701 – Concrete Formwork

B. Section 702 – Concrete Reinforcement

C. Section 703 – Cast-in-Place Concrete

D. Section 704 – Precast Concrete

1.3 REFERENCES

A. 2018 Idaho Transportation Department (ITD) Standard Specifications for Highway Construction

B. Idaho Transportation Department (ITD) Load Resistance Factor Design (LRFD) Bridge Manual

PART 2 – MATERIALS

2.1 RAILING MATERIAL

A. Materials shall be in accordance with 2018 ITD Standard Specifications for Highway Construction Sections 502 – Concrete, 503 – Metal Reinforcement, and 504 – Structural Metals.

PART 3 – WORKMANSHIP

3.1 RAILING WORKMANSHIP

A. Workmanship shall be in accordance with 2018 ITD Standard Specifications for Highway Construction Sections 502 – Concrete, 503 – Metal Reinforcement, and 504 – Structural Metals.

PART 4 - MEASUREMENT AND PAYMENT

A. Pedestrian/Bicycle and Traffic Railing. Measurement and payment shall be per linear foot along the inside (sidewalk side) face of rail. Includes all materials, labor, and equipment needed for the installation, and all appurtenances not itemized in the Bid Schedule.

1. Bid Schedule Payment Reference: **SP-3003**
2. Bid Schedule Description:
   Pedestrian/Bicycle and Traffic Railing……. linear foot (LF).

END OF SECTION

SP-3004

AIR RELEASE VALVE ASSEMBLY

PART 1 - GENERAL

1.1 SECTION INCLUDES

A. This section consists of installing combination air release/vacuum assemblies as shown in the plans.

1.2 RELATED SECTIONS

A. Section 401 – Water Pipe and Fittings

1.3 REFERENCES

A. Idaho Standards for Public Works Construction (ISPWC)

PART 2 – MATERIALS

2.1 Refer to details in Plans for all materials.

PART 3 – WORKMANSHIP

3.1 AIR RELEASE VALVE ASSEMBLY WORKMANSHIP

A. Workmanship shall be in accordance with 2020 ISPWC Standard Specifications and Standard Drawings.

PART 4 - MEASUREMENT AND PAYMENT

A. Air Release Valve Assembly. Measurement and payment shall be per each air release valve assembly installed. Includes all materials, labor, and equipment needed for the installation, and all appurtenances not otherwise itemized in the Bid Schedule.

1. Bid Schedule Payment Reference: **SP-3004**
2. Bid Schedule Description:
   Air Release Valve Assembly……..…..…. each (EA).

END OF SECTION

City of Moscow
Latah County, Idaho
Sixth Street Crossing Over Paradise Creek

Section 5

Economic Development Administration (EDA) Documents

THIS PAGE WAS INTENTIONALLY LEFT BLANK

OMB Number: 0610-0096
Expiration Date: 11/30/2021

U. S. DEPARTMENT OF COMMERCE
ECONOMIC DEVELOPMENT ADMINISTRATION

EDA CONTRACTING PROVISIONS
FOR CONSTRUCTION PROJECTS

These EDA Contracting Provisions for Construction Projects (EDA Contracting Provisions) are intended for use by recipients receiving federal assistance from the U. S. Department of Commerce - Economic Development Administration (EDA). They contain provisions specific to EDA and other federal provisions not normally found in non-federal contract documents. The requirements contained herein must be incorporated into all construction contracts and subcontracts funded wholly or in part with federal assistance from EDA.

TABLE OF CONTENTS

1. Definitions
2. Applicability
3. Federally Required Contract Provisions
4. Required Provisions Deemed Inserted
5. Inspection by EDA Representatives
6. Examination and Retention of Contractor's Records
7. Construction Schedule and Periodic Estimates
8. Contractor's Title to Material
9. Inspection and Testing of Materials
10. "OR EQUAL" Clause
11. Patent Fees and Royalties
12. Claims for Extra Costs
13. Contractor's and Subcontractor's Insurance
14. Contract Security Bonds
15. Labor Standards - Davis-Bacon and Related Acts
16. Labor Standards - Contract Work Hours and Safety Standards Act
17. Equal Employment Opportunity
18. Contracting with Small, Minority and Women's Businesses
19. Health, Safety and Accident Prevention
20. Conflict of Interest and Other Prohibited Interests
21. New Restrictions on Lobbying
22. Historical and Archaeological Data Preservation
23. Clean Air and Water
24. Use of Lead-Based Paints on Residential Structures
25. Energy Efficiency
26. Environmental Requirements
27. Debarment, Suspension, Ineligibility and Voluntary Exclusions
28. EDA Project Sign
29. Buy America

1. **DEFINITIONS**

Agreement – The written instrument that is evidence of the agreement between the Owner and the Contractor overseeing the Work.

Architect/Engineer **-** The person or other entity engaged by the Recipient to perform architectural, engineering, design, and other services related to the work as provided for in the contract.

Contract – The entire and integrated written agreement between the Owner and the Contractor concerning the Work. The Contract supersedes prior negotiations, representations, or agreements, whether written or oral.

Contract Documents – Those items so designated in the Agreement. Only printed or hard copies of the items listed in the Agreement are Contract Documents.

Contractor **–** The individual or entity with whom the Owner has entered into the Agreement.

Drawings or Plans – That part of the Contract Documents prepared or approved by the Architect/Engineer that graphically shows the scope, extent, and character of the Work to be performed by the Contractor.

EDA - The United States of America acting through the Economic Development Administration of the U.S. Department of Commerce or any other person designated to act on its behalf. EDA has agreed to provide financial assistance to the Owner, which includes assistance in financing the Work to be performed under this Contract. Notwithstanding EDA's role, nothing in this Contract shall be construed to create any contractual relationship between the Contractor and EDA.

Owner **–** The individual or entity with whom the Contractor has entered into the Agreement and for whom the Work is to be performed.

Project – The total construction of which the Work to be performed under the Contract Documents may be the whole, or a part.

Recipient – A non-Federal entity receiving a Federal financial assistance award directly from EDA to carry out an activity under an EDA program, including any EDA-approved successor to the entity.

Specifications – That part of the Contract Documents consisting of written requirements for materials, equipment, systems, standards, and workmanship as applied to the Work, and certain administrative requirements and procedural matters applicable thereto.

Subcontractor – An individual or entity having direct contract with the Contractor or with any other Subcontractor for the performance of a part of the Work at the Site.

Work – The entire construction or the various separately identifiable parts thereof required to be provided under the Contract Documents. Work includes and is the result of performing or providing all labor, services, and documentation necessary to produce such construction and furnishing, installing, and incorporating all materials and equipment into such construction, all as required by the Contract Documents.

2. APPLICABILITY

The Project to which the construction work covered by this Contract pertains is being assisted by the United States of America through federal assistance provided by the U.S. Department of Commerce - Economic Development Administration (EDA). Neither EDA, nor any of its departments, entities, or employees is a party to this Contract. The following EDA Contracting Provisions are included in this Contract and all subcontracts or related instruments pursuant to the provisions applicable to such federal assistance from EDA.

3. FEDERALLY REQUIRED CONTRACT PROVISIONS

(a) All contracts in excess of the simplified acquisition threshold - currently fixed at $150,000 (*see* 41 U.S.C. §§ 134 and 1908) must address administrative, contractual, or legal remedies in instances where contractors violate or breach contract terms, and provide for such sanctions and penalties as may be appropriate.

(b) All contracts in excess of $10,000 must address termination for cause and for convenience by the Recipient including the manner by which it will be effected and the basis for settlement.

(c) All construction contracts awarded in excess of $10,000 by recipients of federal assistance and their contractors or subcontractors shall contain a provision requiring compliance with Executive Order 11246 of September 24, 1965, *Equal Employment Opportunity*, as amended by Executive Order 11375 of October 13, 1967, and Department of Labor implementing regulations at 41 C.F.R. part 60.

(d) All prime construction contracts in excess of $2,000 awarded by Recipients must include a provision for compliance with the Davis-Bacon Act (40 U.S.C. §§ 3141-3148) as supplemented by Department of Labor regulations at 29 C.F.R. part 5. The contracts must also include a provision for compliance with the Copeland "Anti-Kickback" Act (18 U.S.C. § 874 and 40 U.S.C. § 3145) as supplemented by Department of Labor regulations at 29 C.F.R. part 3.

(e) All contracts awarded by the Recipient in excess of $100,000 that involve the employment of mechanics or laborers must include a provision for compliance with 40 U.S.C. §§ 3702 and 3704 (the Contract Work Hours and Safety Standards Act) as supplemented by Department of Labor regulations at 29 C.F.R. part 5.

(f) All contracts must include EDA requirements and regulations that involve a requirement on the contractor or sub-contractor to report information to EDA, the Recipient or any other federal agency.

(g) All contracts must include EDA requirements and regulations pertaining to patent rights with respect to any discovery or invention which arises or is developed in the course of or under such contract.

(h) All contracts must include EDA requirements and regulations pertaining to copyrights and rights in data.

(i) All contracts and subgrants in excess of $150,000 must contain a provision that requires compliance with all applicable standards, orders, or requirements issued under the Clean Air Act (42 U.S.C. § 7401 *et seq.*) and the Federal Water Pollution Control Act (Clean Water Act) (33 U.S.C. § 1251 *et seq.*), and Executive Order 11738, *Providing for Administration of the Clean Air Act and the Federal Water Pollution Control Act With Respect to Federal Contracts, Grants, or Loans*.

(j) Contracts must contain mandatory standards and policies relating to energy efficiency which are contained in the state energy conservation plan issued in compliance with the Energy Policy and Conservation Act (42 U.S.C.§ 6201).

(k) Contracts must contain a provision ensuring that contracts are not to be made to parties on the government wide Excluded Parties List System in the System for Award Management (SAM), in accordance with the OMB guidelines at 2 C.F.R. part 180.

(l) Contracts must contain a provision ensure compliance with the Byrd Anti-Lobbying Amendment (31 U.S.C. § 1352) under which contractors that apply or bid for an award of $100,000 or more must file the required certification. Each tier certifies to the tier above that it will not and has not used Federal appropriated funds to pay any person or organization for influencing or attempting to influence an officer or employee of any agency, a member of Congress, officer or employee of Congress, or an employee of a member of Congress in connection with obtaining any Federal contract, grant or any other award covered by 31 U.S.C. § 1352. Each tier must also disclose any lobbying with non-Federal funds that takes place in connection with obtaining any Federal award. Such disclosures are forwarded from tier to tier up to the non-Federal award.

(m) If the Recipient is a state agency or agency of a political subdivision of a state, any contract awarded must contain a provision ensuring compliance with section 6002 of the Solid Waste Disposal Act (42 U.S.C. § 6962), as amended by the Resource Conservation and Recovery Act related to the procurement of recovered materials.

4. **REQUIRED PROVISIONS DEEMED INSERTED**

Each and every provision of law and clause required by law to be inserted in this contract shall be deemed to be inserted herein and the contract shall be read and enforced as though it were included herein, and if through mistake or otherwise any such provision is not inserted, or is not correctly inserted, then upon the application of either party the contract shall forthwith be physically amended to make such insertion of correction.

5. INSPECTION BY EDA REPRESENTATIVES

The authorized representatives and agents of EDA shall be permitted to inspect all work, materials, payrolls, personnel records, invoices of materials, and other relevant data and records.

6. EXAMINATION AND RETENTION OF CONTRACTOR'S RECORDS

(a) The Owner, EDA, or the Comptroller General of the United States, or any of their duly authorized representatives shall, generally until three years after final payment under this contract, have access to and the right to examine any of the Contractor's directly pertinent books, documents, papers, or other records involving transactions related to this contract for the purpose of making audit, examination, excerpts, and transcriptions.

(b) The Contractor agrees to include in first-tier subcontracts under this contract a clause substantially the same as paragraph (a) above. "Subcontract," as used in this clause, excludes purchase orders that do not exceed $10,000.

(c) The periods of access and examination in paragraphs (a) and (b) above for records relating to (1) appeals under the disputes clause of this contract, (2) litigation or settlement of claims arising from the performance of this contract, or (3) costs and expenses of this contract to which the Owner, EDA, or Comptroller General or any of their duly authorized representatives has taken exception shall continue until disposition of such appeals, litigation, claims, or exceptions.

7. CONSTRUCTION SCHEDULE AND PERIODIC ESTIMATES

Immediately after execution and delivery of the contract, and before the first partial payment is made, the Contractor shall deliver to the Owner an estimated construction progress schedule in a form satisfactory to the Owner, showing the proposed dates of commencement and completion of each of the various subdivisions of work required under the Contract Documents and the anticipated amount of each monthly payment that will become due to the Contractor in accordance with the progress schedule. The Contractor also shall furnish the Owner (a) a detailed estimate giving a complete breakdown of the contract price and (b) periodic itemized estimates of work done for the purpose of making partial payments thereon. The costs employed in making up any of these schedules will be used only to determine the basis of partial payments and will not be considered as fixing a basis for additions to or deductions from the contract price.

8. CONTRACTOR'S TITLE TO MATERIAL

No materials, supplies, or equipment for the work shall be purchased by the Contractor or by any subcontractor that is subject to any chattel mortgage or under a conditional sale contract or other agreement by which an interest is retained by the seller. The Contractor warrants and guarantees that he/she has good title to all work, materials, and equipment used by him/her in the Work, free and clear of all liens, claims, or encumbrances.

9. INSPECTION AND TESTING OF MATERIALS

All materials and equipment used in the completion of the Work shall be subject to adequate inspection and testing in accordance with accepted standards. The laboratory or inspection agency shall be selected by the Owner. Materials of construction, particularly those upon which the strength and durability of any structure may depend, shall be subject to inspection and testing to establish conformance with specifications and suitability for intended uses.

10. "OR EQUAL" CLAUSE

Whenever a material, article, or piece of equipment is identified in the Contract Documents by reference to manufacturers' or vendors' names, trade names, catalogue numbers, etc., it is intended merely to establish a standard. Any material, article, or equipment of other manufacturers and vendors that will perform adequately the duties imposed by the general design will be considered equally acceptable provided the material, article, or equipment so proposed is, in the opinion of the Architect/Engineer, of equal substance and function. However, such substitution material, article, or equipment shall not be purchased or installed by the Contractor without the Architect/Engineer's written approval.

11. PATENT FEES AND ROYALTIES

(a) Contractor shall pay all license fees and royalties and assume all costs incident to the use in the performance of the Work or the incorporation in the Work of any invention, design, process, product, or device that is the subject of patent rights or copyrights held by others. If a particular invention, design, process, product, or device is specified in the Contract Documents for use in the performance of the Work and if, to the actual knowledge of Owner or Architect/Engineer, its use is subject to patent rights or copyrights calling for the payment of any license fee or royalty to others, the existence of such rights shall be disclosed by the Owner in the Contract Documents.

(b) To the fullest extent permitted by Laws and Regulations, the Contractor shall indemnify and hold harmless the Owner and the Architect/Engineer, and the officers, directors, partners, employees, agents, consultants, and subcontractors of each and any of them from and against all claims, costs, losses, and damages (including but not limited to all fees and charges of engineers, architects, attorneys, and other professionals and all court or arbitration or other dispute resolution costs) arising out of or relating to any infringement of patent rights or copyrights incident to the use in the performance of the Work or resulting from the incorporation in the Work of any invention, design, process, product, or device not specified in the Contract Documents.

12. CLAIMS FOR EXTRA COSTS

No claims for extra work or cost shall be allowed unless the same was done in pursuance of a written order from the Architect/Engineer approved by the Owner.

13. CONTRACTORS AND SUBCONTRACTORS INSURANCE

(a) The Contractor shall not commence work under this Contract until the Contractor has obtained all insurance reasonably required by the Owner, nor shall the Contractor allow any subcontractor to commence work on his/her subcontract until the insurance required of the subcontractor has been so obtained and approved.

(b) Types of insurance normally required are:

(1) Workers' Compensation
(2) Contractor's Public Liability and Property Damage
(3) Contractor's Vehicle Liability
(4) Subcontractors' Public Liability, Property Damage and Vehicle Liability
(5) Builder's Risk (Fire and Extended Coverage)

(c) **Scope of Insurance and Special Hazards:** The insurance obtained, which is described above, shall provide adequate protection for the Contractor and his/her subcontractors, respectively, against damage claims that may arise from operations under this contract, whether such operations be by the insured or by anyone directly or indirectly employed by him/her and also against any of the special hazards that may be encountered in the performance of this Contract.

(d) **Proof of Carriage of Insurance:** The Contractor shall furnish the Owner with certificates showing the type, amount, class of operations covered, effective dates, and dates of expiration of applicable insurance policies.

14. CONTRACT SECURITY BONDS

(a) If the amount of this Contract exceeds $150,000, the Contractor shall furnish a performance bond in an amount at least equal to one hundred percent (100%) of the Contract price as security for the faithful performance of this Contract and also a payment bond in an amount equal to one hundred percent (100%) of the Contract price or in a penal sum not less than that prescribed by State, Territorial, or local law, as security for the payment of all persons performing labor on the Work under this Contract and furnishing materials in connection with this Contract. The performance bond and the payment bond may be in one or in separate instruments in accordance with local law. Before final acceptance, each bond must be approved by EDA. If the amount of this Contract does not exceed $150,000, the Owner shall specify the amount of the payment and performance bonds.

(b) All bonds shall be in the form prescribed by the Contract Documents except as otherwise provided in applicable laws or regulations, and shall be executed by such sureties as are named in the current list of *Companies Holding Certificates of Authority as Acceptable Sureties on Federal Bonds and as Acceptable Reinsuring Companies* as published in Treasury Circular 570 (amended) by the Financial Management Service, Surety Bond Branch, U.S. Department of the Treasury. All bonds signed by an agent must be accompanied by a certified copy of the agent's

authority to act. Surety companies executing the bonds must also be authorized to transact business in the state where the Work is located.

15. **LABOR STANDARDS - DAVIS-BACON AND RELATED ACTS**
(as required by section 602 of PWEDA)

(a) **Minimum Wages**

(1) All laborers and mechanics employed or working upon the site of the Work in the construction or development of the Project will be paid unconditionally and not less often than once a week, and without subsequent deduction or rebate on any account (except such payroll deductions as are permitted by regulations issued by the Secretary of Labor under the Copeland Act at 29 C.F.R. part 3, the full amount of wages and bona fide fringe benefits (or cash equivalents thereof) due at the time of payment computed at rates not less than those contained in the wage determination of the Secretary of Labor, which is attached hereto and made a part hereof, regardless of any contractual relationship that may be alleged to exist between the Contractor and such laborers and mechanics. Contributions made or costs reasonably anticipated for bona fide fringe benefits under Section 1(b)(2) of the Davis-Bacon Act on behalf of laborers or mechanics are considered wages paid to such laborers or mechanics, subject to the provisions of 29 C.F.R. § 5.5(a)(1)(iv); also, regular contributions made or costs incurred for more than a weekly period (but not less often than quarterly) under plans, funds, or programs, which cover the particular weekly period, are deemed to be constructively made or incurred during such weekly period. Such laborers and mechanics shall be paid the appropriate wage rate and fringe benefits on the wage determination for the classification of work actually performed, without regard to skill, except as provided in 29 C.F.R. § 5.5(a)(4). Laborers or mechanics performing work in more than one classification may be compensated at the rate specified for each classification for the time actually worked therein, provided that the employer's payroll records accurately set forth the time spent in each classification in which work is performed. The wage determination (including any additional classification and wage rates determined under 29 C.F.R. § 5.5(a)(1)(ii) and the Davis-Bacon poster (WH-1321) shall be posted at all times by the contractor and its subcontractors at the site of the work in a prominent and accessible place where it can be easily seen by the workers.

(2) (i) Any class of laborers or mechanics to be employed under the Contract, but not listed in the wage determination, shall be classified in conformance with the wage determination. EDA shall approve an additional classification and wage rate and fringe benefits therefore only when the following criteria have been met:

(A) The work to be performed by the classification requested is not performed by a classification in the wage determination;

(B) The classification is utilized in the area by the construction industry; and

(C) The proposed wage rate, including any bona fide fringe benefits, bears a

reasonable relationship to the wage rates contained in the wage determination.

(ii) If the Contractor and the laborers and mechanics to be employed in the classification (if known), or their representatives, and EDA or its designee agree on the classification and wage rate (including the amount designated for fringe benefits where appropriate), a report of the action taken shall be sent by EDA or its designee to the Administrator of the Wage and Hour Division, Employment Standards Administration, U.S. Department of Labor, Washington, D.C. 20210.

(iii) In the event the Contractor, the laborers or mechanics to be employed in the classification or their representatives, and EDA or its designee do not agree on the proposed classification and wage rate (including the amount designated for fringe benefits, where appropriate), EDA or its designee shall refer the questions, including the views of all interested parties and the recommendation of EDA or its designee, to the Administrator for determination.

(iv) The wage rate (including fringe benefits where appropriate) determined pursuant to paragraphs (a)(2)(ii) or (iii) of this section, shall be paid to all workers performing work in the classification under this contract from the first day on which work is performed in the classification.

(3) Whenever the minimum wage rate prescribed in the contract for a class of laborers or mechanics includes a fringe benefit which is not expressed as an hourly rate, the Contractor shall either pay the benefit as stated in the wage determination or shall pay another bona fide fringe benefit or an hourly cash equivalent thereof.

(4) If the Contractor does not make payments to a trustee or other third person, the Contractor may consider as part of the wages of any laborer or mechanic the amount of any costs reasonably anticipated in providing bona fide fringe benefits under a plan or program, provided, that the Secretary of Labor has found, upon the written request of the Contractor, that the applicable standards of the Davis-Bacon Act have been met. The Secretary of Labor may require the Contractor to set aside in a separate account assets for the meeting of obligations under the plan or program.

(b) **Withholding**

EDA or its designee shall upon its own action or upon written request of an authorized representative of the Department of Labor withhold or cause to be withheld from the Contractor under this Contract or any other federal contract with the same prime Contractor, or any other federally-assisted contract subject to Davis-Bacon prevailing wage requirements, which is held by the same prime contractor so much of the accrued payments or advances as may be considered necessary to pay laborers and mechanics, including apprentices, trainees and helpers, employed by the Contractor or any subcontractor the full amount of wages required by the Contract. In the event of failure to pay any laborer or mechanic, including any apprentice, trainee or helper employed or working on the site of the Work in the construction or development of the Project, all or part of the wages required by the Contract, EDA or its designee may, after written notice to the Contractor, sponsor, applicant, or owner, take such action as may be necessary to cause the suspension of any further payment, advance, or guarantee of funds until such violations

have ceased. EDA or its designee may, after written notice to the Contractor, disburse such amounts withheld for and on account of the Contractor or subcontractor to the respective employees to whom they are due. The Comptroller General shall make such disbursements in the case of direct Davis-Bacon Act contracts.

(c) **Payrolls and basic records**

(1) Payrolls and basic records relating thereto shall be maintained by the Contractor during the course of the Work and preserved for a period of three years thereafter for all laborers and mechanics working at the site of the Work in the construction or development of the Project. Such records shall contain the name, address, and social security number of each such worker, his or her correct classification, hourly rates of wages paid (including rates of contributions or costs anticipated for bona fide fringe benefits or cash equivalents thereof of the types described in section 1(b)(2)(B) of the Davis-Bacon Act), daily and weekly number of hours worked, deductions made and actual wages paid. Whenever the Secretary of Labor has found under 29 C.F.R. § 5.5(a)(1)(iv) that the wages of any laborer or mechanic include the amount of any costs reasonably anticipated in providing benefits under a plan or program described in section 1(b)(2)(B) of the Davis-Bacon Act, the Contractor shall maintain records which show that the commitment to provide such benefits is enforceable, the plan or program is financially responsible, and the plan or program has been communicated in writing to the laborers or mechanics affected, and provide records that show the costs anticipated or the actual cost incurred in providing such benefits. Contractors employing apprentices or trainees under approved programs shall maintain written evidence of the registration of apprenticeship programs and certification of trainee programs, the registration of the apprentices and trainees, and the ratios and wage rates prescribed in the applicable programs.

(2) (i) For each week in which Contract work is performed, the Contractor shall submit a copy of all payrolls to the Owner for transmission to EDA or its designee. The payrolls submitted shall set out accurately and completely all of the information required to be maintained under 29 C.F.R. part 5.5(a)(3)(i). This information may be submitted in any form desired. Optional Form WH-347 is available for this purpose. It may be purchased from the Superintendent of Documents (Federal Stock Number 029-005-00014-1), U.S. Government Printing Office, Washington, D.C. 20402; or downloaded from the U.S. Department of Labor's website at https://www.dol.gov/whd/forms/wh347.pdf. The prime Contractor is responsible for the submission of copies of payrolls by all subcontractors

(ii) Each payroll submitted shall be accompanied by a "Statement of Compliance," signed by the Contractor or subcontractor or his or her agent who pays or supervises the payment of the persons employed under the Contract and shall certify the following:

(A) That the payroll for the payroll period contains the information required to be maintained under 29 C.F.R. § 5.5(a)(3)(i) and that such information is correct and complete;

(B) That each laborer or mechanic (including each helper, apprentice, and trainee) employed on the Contract during the payroll period has been paid the full weekly wages earned, without rebate, either directly or indirectly, and that no deductions have been made either directly or indirectly from the full wages earned, other than permissible deductions as set forth in 29 C.F.R. part 3; and

(C) That each laborer or mechanic has been paid not less than the applicable wage rates and fringe benefits or cash equivalents for the classification of work performed, as specified in the applicable wage determination incorporated into the Contract.

(iii) The weekly submission of a properly executed certification set forth on the reverse side of Optional Form WH-347 shall satisfy the requirement for submission of the "Statement of Compliance" required by paragraph 15(c)(2)(ii) of this section.

(iv) The falsification of any of the above certifications may subject the Contractor or subcontractor to civil or criminal prosecution under section 1001 of Title 18 and section 3729 of Title 31 of the U.S. Code.

(3) The Contractor or subcontractor shall make the records required under paragraph 15(c)(1) of this section available for inspection, copying, or transcription by authorized representatives of EDA or its designee or the Department of Labor, and shall permit such representatives to interview employees during working hours on the job. If the Contractor or subcontractor fails to submit the required records or to make them available, EDA or its designee may, after written notice to the Contractor or Owner, take such action as may be necessary to cause the suspension of any further payment, advance, or guarantee of funds. Furthermore, failure to submit the required records upon request or to make such records available may be grounds for debarment action pursuant to 29 C.F.R. § 5.12.

(d) **Apprentices and Trainees**.

(1) **Apprentices**. Apprentices will be permitted to work at less than the predetermined rate for the work they performed when they are employed pursuant to and individually registered in a bona fide apprenticeship program registered with the U.S. Department of Labor, Employment and Training Administration, Bureau of Apprenticeship and Training (Bureau), or with a State Apprenticeship Agency recognized by the Bureau, or if a person is employed in his or her first 90 days of probationary employment as an apprentice in such an apprenticeship program, who is not individually registered in the program, but who has been certified by the Bureau of Apprenticeship and Training or a State Apprenticeship Agency (where appropriate) to be eligible for probationary employment as an apprentice. The allowable ratio of apprentices to journeymen on the job site in any craft classification shall not be greater than the ratio permitted to the Contractor as to the entire work force under the registered program. Any worker listed on a payroll at an apprentice wage rate who is not registered or otherwise employed as stated above, shall be paid not less than the applicable wage rate on the wage determination for the classification of work actually performed. In addition, any

apprentice performing work on the job site in excess of the ratio permitted under the registered program shall be paid not less than the applicable wage rate on the wage determination for the work actually performed. Where a Contractor is performing construction on a Project in a locality other than that in which its program is registered, the ratios and wage rates (expressed in percentages of the journeyman's hourly rate) specified in the Contractor's or subcontractor's registered program shall be observed. Every apprentice must be paid at not less than the rate specified in the registered program for the apprentice's level of progress, expressed as a percentage of the journeymen hourly rate specified in the applicable wage determination. Apprentices shall be paid fringe benefits in accordance with the provisions of the apprenticeship program. If the apprenticeship program does not specify fringe benefits, apprentices must be paid the full amount of fringe benefits listed on the wage determination for the applicable classification. If the Administrator determines that a different practice prevails for the applicable apprentice classification, fringes shall be paid in accordance with that determination. In the event the Bureau of Apprenticeship and Training, or a State Apprenticeship Agency recognized by the Bureau, withdraws approval of an apprenticeship program, the Contractor will no longer be permitted to utilize apprentices at less than the applicable predetermined rate for the work performed until an acceptable program is approved.

(2) **Trainees**. Except as provided in 29 C.F.R. § 5.16, trainees will not be permitted to work at less than the predetermined rate for the work performed unless they are employed pursuant to and individually registered in a program that has received prior approval, evidenced by formal certification by the U.S. Department of Labor, Employment and Training Administration. The ratio of trainees to journeymen on the job site shall not be greater than permitted under the plan approved by the Employment and Training Administration. Every trainee must be paid at not less than the rate specified in the approved program for the trainee's level of progress, expressed as a percentage of the journeyman's hourly rate specified in the applicable wage determination. Trainees shall be paid fringe benefits in accordance with the provisions of the trainee program. If the trainee program does not mention fringe benefits, trainees shall be paid the full amount of fringe benefits listed on the wage determination unless the Administrator of the Wage and Hour Division determines that there is an apprenticeship program associated with the corresponding journeyman wage rate on the wage determination which provides for less than full fringe benefits for apprentices. Any employee listed on the payroll at a trainee rate who is not registered and participating in a training plan approved by the Employment and Training Administration shall be paid not less than the applicable wage rate on the wage determination for the classification of work actually performed. In addition, any trainee performing work on the job site in excess of the ratio permitted under the registered program shall be paid not less than the applicable wage rate on the wage determination for the work actually performed. In the event the Employment and Training Administration withdraws approval of a training program, the Contractor will no longer be permitted to utilize trainees at less than the applicable predetermined rate for the work performed until an acceptable program is approved.

(3) **Equal employment opportunity**. The utilization of apprentices, trainees and journeymen under this part shall be in conformity with the equal employment opportunity

requirements of Executive Order 11246, *Equal Employment Opportunity*, as amended, and 29 C.F.R. part 30.

(e) **Compliance with Copeland Anti-Kickback Act Requirements**. The Contractor shall comply with the Copeland Anti-Kickback Act (18 U.S.C. § 874 and 40 U.S.C. § 3145) as supplemented by Department of Labor regulations (29 C.F.R. part 3, "Contractors and Subcontractors on Public Buildings or Public Works Financed in Whole or in Part by Loans or Grants of the United States"). The Act provides that the Contractor and any subcontractors shall be prohibited from inducing, by any means, any person employed in the construction, completion, or repair of public work, to give up any part of the compensation to which they are otherwise entitled. The Owner shall report all suspected or reported violations to EDA.

(f) **Subcontracts**. The Contractor and any subcontractors will insert in any subcontracts the clauses contained in 29 C.F.R. §§ 5.5(a)(1) through (10) and such other clauses as EDA or its designee may require, and also a clause requiring the subcontractors to include these clauses in any lower tier subcontracts. The prime Contractor shall be responsible for the compliance by any subcontractor or lower tier subcontractor with all the contract clauses in 29 C.F.R. § 5.5.

(g) **Contract termination; debarment**. The breach of the contract clauses in 29 C.F.R. § 5.5 may be grounds for termination of the contract, and for debarment as a Contractor and a subcontractor as provided in 29 C.F.R. § 5.12.

(h) **Compliance with Davis-Bacon and Related Act Requirements**. All rulings and interpretations of the Davis-Bacon and Related Acts contained in 29 C.F.R. parts 1, 3, and 5 are herein incorporated by reference in this contract.

(i) **Disputes concerning labor standards**. Disputes arising out of the labor standards provisions of this Contract shall not be subject to the general disputes clause of this Contract. Such disputes shall be resolved in accordance with the procedures of the Department of Labor set forth in 29 C.F.R. parts 5, 6, and 7. Disputes within the meaning of this clause include disputes between the contractor (or any of its subcontractors) and EDA or its designee, the U.S. Department of Labor, or the employees or their representatives.

(j) **Certification of Eligibility**.

(1)By entering into this Contract, the Contractor certifies that neither it nor any person or firm that has an interest in the Contractor's firm is a person or firm ineligible to be awarded Government contracts by virtue of section 3(a) of the Davis-Bacon Act or 29 C.F.R. § 5.12(a)(1).

(2) No part of this Contract shall be subcontracted to any person or firm ineligible for award of a Government contract by virtue of section 3(a) of the Davis-Bacon Act or 29 C.F.R. § 5.12(a)(1).

(3) The penalty for making false statements is prescribed in the U.S. Criminal Code, 18 U.S.C. § 1001.

16. LABOR STANDARDS - CONTRACT WORK HOURS AND SAFETY STANDARDS ACT

As used in this paragraph, the terms "laborers" and "mechanics" include watchmen and guards.

(a) **Overtime requirements**. No Contractor or subcontractor contracting for any part of the Contract work, which may require or involve the employment of laborers or mechanics, shall require or permit any such laborer or mechanic in any workweek in which that person is employed on such work to work in excess of forty hours in such workweek unless such laborer or mechanic receives compensation at a rate not less than one and one-half times the basic rate of pay for all hours worked in excess of forty hours in such workweek.

(b) **Violation; liability for unpaid wages, liquidated damages**. In the event of any violation of the clause set forth in paragraph (a) of this section, the Contractor and any subcontractor responsible therefore shall be liable for the unpaid wages. In addition, such Contractor and subcontractor shall be liable to the United States (in the case of work done under contract for the District of Columbia or a territory, to such District or to such territory), for liquidated damages. Such liquidated damages shall be computed with respect to each individual laborer or mechanic, including watchmen and guards, employed in violation of the clause set forth in paragraph (a) of this section, in the sum of $10 for each calendar day on which such individual was required or permitted to work in excess of the standard workweek of forty hours without payment of the overtime wages required by the clause set forth in paragraph (a) of this section.

(c) **Withholding for unpaid wages and liquidated damages**. EDA or its designee shall upon its own action or upon written request of an authorized representative of the Department of Labor withhold or cause to be withheld, from any monies payable on account of work performed by the Contractor or subcontractor under any such Contract or any other federal contract with the same prime Contractor, or any other federally-assisted contract subject to the Contract Work Hours and Safety Standards Act, which is held by the same prime Contractor such sums as may be determined to be necessary to satisfy any liabilities of such Contractor or subcontractor for unpaid wages and liquidated damages as provided in the clause set forth in paragraph (b) of this section.

(d) **Subcontracts**. The Contractor or subcontractor shall insert in any subcontracts the clauses set forth in paragraphs (a) through (c) of this section and also a clause requiring the subcontractors to include these clauses in any lower tier subcontracts. The prime Contractor shall be responsible for compliance by any subcontractor or lower tier subcontractor with the clauses set forth in paragraphs (a) through (c) of this section.

17. EQUAL EMPLOYMENT OPPORTUNITY

(a) The Recipient hereby agrees that it will incorporate or cause to be incorporated into any contract for construction work, or modification thereof, as defined in the regulations of the Secretary of Labor at 41 C.F.R. chapter 60, which is paid for in whole or in part with funds obtained from EDA, the following equal opportunity clause:

During the performance of this contract, the Contractor agrees as follows:

(1) The Contractor will not discriminate against any employee or applicant for employment because of race, color, religion, sex, sexual orientation, gender identity, or national origin. The Contractor will take affirmative action to ensure that applicants are employed, and that employees are treated during employment without regard to their race, color, religion, sex, sexual orientation, gender identity, or national origin. Such action shall include, but not be limited to the following: Employment, upgrading, demotion, or transfer; recruitment or recruitment advertising; layoff or termination; rates of pay or other forms of compensation; and selection for training including apprenticeship. The Contractor agrees to post in conspicuous places available to employees and applicants for employment notices to be provided setting forth the provisions of this nondiscrimination clause.

(2) The Contractor will, in all solicitations or advertisements for employees placed by or on behalf of the Contractor state that all qualified applicants will receive consideration for employment without regard to race, color, religion, sex, sexual orientation, gender identity, or national origin.

(3) The contractor will not discharge or in any other manner discriminate against any employee or applicant for employment because such employee or applicant has inquired about, discussed, or disclosed the compensation of the employee or applicant or another employee or applicant. This provision shall not apply to instances in which an employee who has access to the compensation information of other employees or applicants as a part of such employee's essential job functions discloses the compensation of such other employees or applicants to individuals who do not otherwise have access to such information, unless such disclosure is in response to a formal complaint or charge, in furtherance of an investigation, proceeding, hearing, or action, including an investigation conducted by the employer, or is consistent with the contractor's legal duty to furnish information.

(4) The Contractor will send to each labor union or representative of workers with which it has a collective bargaining agreement or other contract or understanding, a notice to be provided advising the said labor union or workers representatives of the Contractor's commitments hereunder, and shall post copies of the notice in conspicuous places available to employees and applicants for employment.

(5) The Contractor will comply with all provisions of Executive Order 11246 of September 24, 1965 and of the rules, regulations, and relevant orders of the Secretary of Labor.

(6) The Contractor will furnish all information and reports required by Executive Order 11246 of September 24, 1965, and by rules, regulations, and orders of the Secretary of Labor, or pursuant thereto, and will permit access to its books, records, and accounts by EDA and the Secretary of Labor for purposes of investigation to ascertain compliance with such rules, regulations, and orders.

(7) In the event of the Contractor's noncompliance with the nondiscrimination clauses of

this Contract or with any of the said rules, regulations, or orders, this Contract may be canceled, terminated, or suspended in whole or in part and the Contractor may be declared ineligible for further Government contracts or federally-assisted construction contracts in accordance with procedures authorized in Executive Order 11246 of September 24, 1965, and such other sanctions may be imposed and remedies invoked as provided in Executive Order 11246 of September 24, 1965, or by rule, regulation or order of the Secretary of Labor, or as otherwise provided by law.

(8) The Contractor will include the portion of the sentence immediately preceding paragraph 17(a)(1) and the provisions of paragraphs 17(a)(1) through (8) in every subcontract or purchase order unless exempted by rules, regulations, or orders of the Secretary of Labor issued pursuant to section 204 of Executive Order 11246 of September 24, 1965, so that such provisions will be binding upon each subcontractor or vendor. The Contractor will take such action with respect to any subcontract or purchase order as EDA or the Secretary of Labor may direct as a means of enforcing such provisions, including sanctions for noncompliance. Provided, however, that in the event the Contractor becomes involved in or is threatened with litigation with a subcontractor or vendor as a result of such direction by EDA or the Secretary of Labor, the Contractor may request the United States to enter into such litigation to protect the interests of the United States.

(9) The Recipient further agrees that it will be bound by the above equal opportunity clause with respect to its own employment practices when it participates in federally-assisted construction work. Provided, however, that if the Recipient so participating is a State or local government, the above equal opportunity clause is not applicable to any agency, instrumentality, or subdivision of such government that does not participate in work on or under the Contract.

(10)The Recipient agrees that it will assist and cooperate actively with EDA and the Secretary of Labor in obtaining the compliance of contractors and subcontractors with the equal opportunity clause and the rules, regulations, and relevant orders of the Secretary of Labor, that it will furnish EDA and the Secretary of Labor such information as they may require for the supervision of such compliance, and that it will otherwise assist EDA in the discharge of the EDA's primary responsibility for securing compliance.

(11) The Recipient further agrees that it will refrain from entering into any contract or contract modification subject to Executive Order 11246 of September 24, 1965, with a Contractor debarred from, or who has not demonstrated eligibility for, Government contracts and federally assisted construction contracts pursuant to the Executive Order and will carry out such sanctions and penalties for violation of the equal opportunity clause as may be imposed upon contractors and subcontractors by EDA or the Secretary of Labor pursuant to Part II, Subpart D of the Executive Order. In addition, the Recipient agrees that if it fails or refuses to comply with these undertakings, EDA may take any or all of the following actions: Cancel, terminate, or suspend in whole or in part this EDA financial assistance; refrain from extending any further assistance to the applicant under the program with respect to which the failure or refund occurred until satisfactory assurance of future compliance has been received from such applicant; and refer the case

to the Department of Justice for appropriate legal proceedings.

(b) Exemptions to Above Equal Opportunity Clause (41 C.F.R. chapter 60):

(1) Contracts and subcontracts not exceeding $10,000 (other than Government bills of lading, and other than contracts and subcontracts with depositories of Federal funds in any amount and with financial institutions which are issuing and paying agents for U.S. savings bonds and savings notes) are exempt. The amount of the Contract, rather than the amount of the federal financial assistance, shall govern in determining the applicability of this exemption.

(2) Except in the case of subcontractors for the performance of construction work at the site of construction, the clause shall not be required to be inserted in subcontracts below the second tier.

(3) Contracts and subcontracts not exceeding $10,000 for standard commercial supplies or raw materials are exempt.

18. CONTRACTING WITH SMALL, MINORITY AND WOMEN'S BUSINESSES

(a) If the Contractor intends to let any subcontracts for a portion of the work, the Contractor shall take affirmative steps to assure that small, minority and women's businesses are used when possible as sources of supplies, equipment, construction, and services.

(b) Affirmative steps shall consist of:

(1) Placing qualified small and minority businesses and women's business enterprises on solicitation lists;

(2) Ensuring that small and minority businesses and women's business enterprises are solicited whenever they are potential sources;

(3) Dividing total requirements, when economically feasible, into smaller tasks or quantities to permit maximum participation by small and minority businesses and women's business enterprises;

(4) Establishing delivery schedules, where the requirements of the contract permit, which encourage participation by small and minority businesses and women's business enterprises;

(5) Using the services and assistance of the U.S. Small Business Administration, the Minority Business Development Agency of the U.S. Department of Commerce, and State and local governmental small business agencies;

(6) Requiring each party to a subcontract to take the affirmative steps of this section; and

(7) The Contractor is encouraged to procure goods and services from labor surplus area firms.

19. **HEALTH, SAFETY, AND ACCIDENT PREVENTION**

(a) In performing this contract, the Contractor shall:

(1) Ensure that no laborer or mechanic shall be required to work in surroundings or under working conditions which are unsanitary, hazardous, or dangerous to their health and/or safety as determined under construction safety and health standards promulgated by the Secretary of Labor by regulation;

(2) Protect the lives, health, and safety of other persons;

(3) Prevent damage to property, materials, supplies, and equipment; and

(4) Avoid work interruptions.

(b) For these purposes, the Contractor shall:

(1) Comply with regulations and standards issued by the Secretary of Labor at 29 C.F.R. part 1926. Failure to comply may result in imposition of sanctions pursuant to the Contract Work Hours and Safety Standards Act (40 U.S.C. §§ 3701 – 3708); and

(2) Include the terms of this clause in every subcontract so that such terms will be binding on each subcontractor.

(c) The Contractor shall maintain an accurate record of exposure data on all accidents incident to work performed under this Contract resulting in death, traumatic injury, occupational disease, or damage to property, materials, supplies, or equipment, and shall report this data in the manner prescribed by 29 C.F.R. part 1904.

(d) The Owner shall notify the Contractor of any noncompliance with these requirements and of the corrective action required. This notice, when delivered to the Contractor or the Contractor's representative at the site of the Work, shall be deemed sufficient notice of the noncompliance and corrective action required. After receiving the notice, the Contractor shall immediately take corrective action. If the Contractor fails or refuses to take corrective action promptly, the Owner may issue an order stopping all or part of the Work until satisfactory corrective action has been taken. The Contractor shall not base any claim or request for equitable adjustment for additional time or money on any stop order issued under these circumstances.

(e) The Contractor shall be responsible for its subcontractors' compliance with the provisions of this clause. The Contractor shall take such action with respect to any subcontract as EDA, or the Secretary of Labor shall direct as a means of enforcing such provisions.

20. CONFLICT OF INTEREST AND OTHER PROHIBITED INTERESTS

(a) No official of the Owner who is authorized in such capacity and on behalf of the Owner to negotiate, make, accept, or approve, or to take part in negotiating, making, accepting, or approving any architectural, engineering, inspection, construction or material supply contract or any subcontract in connection with the construction of the Project, shall become directly or indirectly interested personally in this Contract or in any part hereof.

(b) No officer, employee, architect, attorney, engineer, or inspector of or for the Owner who is authorized in such capacity and on behalf of the Owner to exercise any legislative, executive, supervisory or other similar functions in connection with the construction of the Project, shall become directly or indirectly interested personally in this Contract or in any part thereof, any material supply contract, subcontract, insurance contract, or any other contract pertaining to the Project.

(c) The Contractor may not knowingly contract with a supplier or manufacturer if the individual or entity who prepared the Contract Documents has a corporate or financial affiliation with the supplier or manufacturer.

(d) The Owner's officers, employees, or agents shall not engage in the award or administration of this Contract if a conflict of interest, real or apparent, may be involved. Such a conflict may arise when: (i) the employee, officer or agent; (ii) any member of their immediate family; (iii) their partner or (iv) an organization that employs, or is about to employ, any of the above, has a financial interest in the Contractor. The Owner's officers, employees, or agents shall neither solicit nor accept gratuities, favors, or anything of monetary value from the Contractor or subcontractors.

(e) If the Owner finds after a notice and hearing that the Contractor, or any of the Contractor's agents or representatives, offered or gave gratuities (in the form of entertainment, gifts, or otherwise) to any official, employee, or agent of the Owner or EDA in an attempt to secure this Contract or favorable treatment in awarding, amending, or making any determinations related to the performance of this Contract, the Owner may, by written notice to the Contractor, terminate this Contract. The Owner may also pursue other rights and remedies that the law or this Contract provides. However, the existence of the facts on which the Owner bases such findings shall be an issue and may be reviewed in proceedings under the dispute resolution provisions of this Contract.

(f) In the event this Contract is terminated as provided in paragraph (e) of this section, the Owner may pursue the same remedies against the Contractor as it could pursue in the event of a breach of this Contract by the Contractor. As a penalty, in addition to any other damages to which it may be entitled by law, the Owner may pursue exemplary damages in an amount (as determined by the Owner) which shall not be less than three nor more than ten times the costs the Contractor incurs in providing any such gratuities to any such officer or employee.

21. RESTRICTIONS ON LOBBYING

(a) This Contract, or subcontract is subject to 31 U.S.C. § 1352, regarding lobbying restrictions. The section is explained in the common rule, 15 C.F.R. part 28 (55 FR 6736-6748, February 26, 1990). Each bidder under this Contract or subcontract is generally prohibited from using federal funds for lobbying the Executive or Legislative Branches of the Federal Government in connection with this EDA Award.

(b) **Contract Clause Threshold**: This Contract Clause regarding lobbying must be included in each bid for a contract or subcontract exceeding $100,000 of federal funds at any tier under the EDA Award.

(c) **Certification and Disclosure**: Each bidder of a contract or subcontract exceeding $100,000 of federal funds at any tier under the federal Award must file Form CD-512, *Certification Regarding Lobbying – Lower Tier Covered Transactions*, and, if applicable, Standard Form-LLL, *Disclosure of Lobbying Activities*, regarding the use of any nonfederal funds for lobbying. Certifications shall be retained by the Contractor or subcontractor at the next higher tier. All disclosure forms, however, shall be forwarded from tier to tier until received by the Recipient of the EDA Award, who shall forward all disclosure forms to EDA.

(d) **Continuing Disclosure Requirement**: Each Contractor or subcontractor that is subject to the Certification and Disclosure provision of this Contract Clause is required to file a disclosure form at the end of each calendar quarter in which there occurs any event that requires disclosure or that materially affects the accuracy of the information contained in any disclosure form previously filed by such person. Disclosure forms shall be forwarded from tier to tier until received by the Recipient of the EDA Award, who shall forward all disclosure forms to EDA.

(e) **Indian Tribes, Tribal Organizations, or Other Indian Organizations**: Indian tribes, tribal organizations, or any other Indian organizations, including Alaskan Native organizations, are excluded from the above lobbying restrictions and reporting requirements, but only with respect to expenditures that are by such tribes or organizations for lobbying activities permitted by other federal law. An Indian tribe or organization that is seeking an exclusion from Certification and Disclosure requirements must provide EDA with the citation of the provision or provisions of federal law upon which it relies to conduct lobbying activities that would otherwise be subject to the prohibitions in and to the Certification and Disclosure requirements of 31 U.S.C. § 1352, preferably through an attorney's opinion. Note, also, that a non-Indian subrecipient, contractor, or subcontractor under an award to an Indian tribe, for example, is subject to the restrictions and reporting requirements.

22. HISTORICAL AND ARCHAEOLOGICAL DATA PRESERVATION

The Contractor agrees to facilitate the preservation and enhancement of structures and objects of historical, architectural or archaeological significance and when such items are found and/or unearthed during the course of project construction. Any excavation by the Contractor that uncovers an historical or archaeological artifact shall be immediately reported to the Owner and a representative of EDA. Construction shall be temporarily halted pending the notification process and further directions issued by EDA after consultation with the State Historic

Preservation Officer (SHPO) for recovery of the items. *See* the National Historic Preservation Act of 1966 (54 U.S.C. § 300101 *et seq.*, formerly at 16 U.S.C. § 470 *et seq.*) and Executive Order No. 11593 of May 31, 1971.

23. CLEAN AIR AND WATER

Applicable to Contracts in Excess of $150,000

(a) **Definition**. "Facility" means any building, plant, installation, structure, mine, vessel, or other floating craft, location, or site of operations, owned, leased, or supervised by the Contractor or any subcontractor, used in the performance of the Contract or any subcontract. When a location or site of operations includes more than one building, plant, installation, or structure, the entire location or site shall be deemed a facility except when the Administrator, or a designee, of the United States Environmental Protection Agency (EPA) determines that independent facilities are collocated in one geographical area.

(b) In compliance with regulations issued by the EPA, 2 C.F.R. part 1532, pursuant to the Clean Air Act, as amended (42 U.S.C. § 7401 *et seq*.); the Federal Water Pollution Control Act, as amended (33 U.S.C. § 1251 *et seq*.); and Executive Order 11738, the Contractor agrees to:

(1) Not utilize any facility in the performance of this contract or any subcontract which is listed on the Excluded Parties List System, part of the System for Award Management (SAM), pursuant to 2 C.F.R. part 1532 for the duration of time that the facility remains on the list;

(2) Promptly notify the Owner if a facility the Contractor intends to use in the performance of this contract is on the Excluded Parties List System or the Contractor knows that it has been recommended to be placed on the List;

(3) Comply with all requirements of the Clean Air Act and the Federal Water Pollution Control Act, including the requirements of section 114 of the Clean Air Act and section 308 of the Federal Water Pollution Control Act, and all applicable clean air and clean water standards; and

(4) Include or cause to be included the provisions of this clause in every subcontract and take such action as EDA may direct as a means of enforcing such provisions.

24. USE OF LEAD-BASED PAINTS ON RESIDENTIAL STRUCTURES

(a) If the work under this Contract involves construction or rehabilitation of residential structures over $5,000, the Contractor shall comply with the Lead-based Paint Poisoning Prevention Act (42 U.S.C. § 4831). The Contractor shall assure that paint or other surface coatings used in a residential property does not contain lead equal to or in excess of 1.0 milligram per square centimeter or 0.5 percent by weight or 5,000 parts per million (ppm) by weight. For purposes of this section, "residential property" means a dwelling unit, common areas, building exterior surfaces, and any surrounding land, including outbuildings, fences and play equipment affixed to the land, belonging to an owner and available for use by residents, but not

including land used for agricultural, commercial, industrial or other non-residential purposes, and not including paint on the pavement of parking lots, garages, or roadways.

(b) As a condition to receiving assistance under PWEDA, recipients shall assure that the restriction against the use of lead-based paint is included in all contracts and subcontracts involving the use of federal funds.

25. ENERGY EFFICIENCY

The Contractor shall comply with all standards and policies relating to energy efficiency which are contained in the energy conservation plan issued in compliance with the Energy Policy and Conservation Act (42 U.S.C. § 6201) for the State in which the Work under the Contract is performed.

26. ENVIRONMENTAL REQUIREMENTS

When constructing a Project involving trenching and/or other related earth excavations, the Contractor shall comply with the following environmental constraints:

(1) **Wetlands**. When disposing of excess, spoil, or other construction materials on public or private property, the Contractor shall not fill in or otherwise convert wetlands.

(2) **Floodplains**. When disposing of excess, spoil, or other construction materials on public or private property, the Contractor shall not fill in or otherwise convert 100 year floodplain areas delineated on the latest Federal Emergency Management Agency (FEMA) Floodplain Maps, or other appropriate maps, i.e., alluvial soils on Natural Resource Conservation Service (NRCS) Soil Survey Maps.

(3) **Endangered Species**. The Contractor shall comply with the Endangered Species Act, which provides for the protection of endangered and/or threatened species and critical habitat. Should any evidence of the presence of endangered and/or threatened species or their critical habitat be brought to the attention of the Contractor, the Contractor will immediately report this evidence to the Owner and a representative of EDA. Construction shall be temporarily halted pending the notification process and further directions issued by EDA after consultation with the U.S. Fish and Wildlife Service.

27. DEBARMENT, SUSPENSION, INELIGIBILITY, AND VOLUNTARY EXCLUSIONS

As required by Executive Orders 12549 and 12689, *Debarment and Suspension*, 2 C.F.R. Part 180 and implemented by the Department of Commerce at 2 C.F.R. part 1326, for prospective participants in lower tier covered transactions (except subcontracts for goods or services under the $25,000 small purchase threshold unless the subrecipient will have a critical influence on or substantive control over the award), the Contractor agrees that:

(1) By entering into this Contract, the Contractor and subcontractors certify, that neither it nor its principals is presently debarred, suspended, proposed for debarment, declared

ineligible, or voluntarily excluded from participation in this Contract by any federal department or agency.

(2) Where the Contractor or subcontractors are unable to certify to any of the statements in this certification, the Contractor or subcontractors shall attach an explanation to this bid.

See also 2 C.F.R. part 180 and 2 C.F.R. § 200.342.

28. **EDA PROJECT SIGN**

The Contractor shall supply, erect, and maintain in good condition a Project sign according to the specifications provided by EDA. To the extent practical, the sign should be a free standing sign. Project signs shall not be located on public highway rights-of-way. Location and height of signs will be coordinated with the local agency responsible for highway or street safety in the Project area, if any possibility exists for obstructing vehicular traffic line of sight. Whenever the EDA site sign specifications conflict with State law or local ordinances, the EDA Regional Director will permit such conflicting specifications to be modified so as to comply with State law or local ordinance.

29. **BUY AMERICA**

To the greatest extent practicable, contractors are encouraged to purchase American-made equipment and products with funding provided under EDA financial assistance awards.

OMB Number: 0610-0096
Expiration Date: 11/30/2021

EDA PROJECT SIGN

The Contractor shall supply, erect, and maintain in good condition a project sign according to the specifications set forth below:

EDA SITE SIGN SPECIFICATIONS

Size: 4' x 8' x ¾"

Materials: Exterior grade/MDO plywood (APA rating A-B)

Supports: 4" x 4" x 12' posts with 2" x 4" cross branching

Erection: Posts shall be set a minimum of three feet deep in concrete footings that are at least 12" in diameter.

Paint: Outdoor enamel

Colors: Jet Black, Blue (PMS300), and Gold (PMS7406). Specifically, on white background the following will be placed:

The U. S. Department of Commerce seal in blue, black, and gold;

"EDA" in blue;

"U. S. DEPARTMENT OF COMMERCE ECONOMIC DEVELOPMENT

ADMINISTRATION" in black;

"In partnership with" in blue;

(Actual name of the) "EDA Grant Recipient" in black;

Lettering: Specific fonts are named below; positioning will be as shown on the attached illustration.

"U. S. DEPARTMENT OF COMMERCE ECONOMIC DEVELOPMENT ADMINISTRATION" use Bank Gothic Medium - BANK GOTHIC MED

"In partnership with" use Univers™ 55 Oblique - *Univers 55*

(Name of) "EDA Grant Recipient" use Univers™ Extra Black 85 **Univers 85**

Project signs will not be erected on public highway rights-of-way. If any possibility exists for obstruction to traffic line of sight, the location and height of the sign will be coordinated with the agency responsible for highway or street safety in the area.

The EDA Regional Director may permit modifications to these specifications if they conflict with state law or local ordinances.

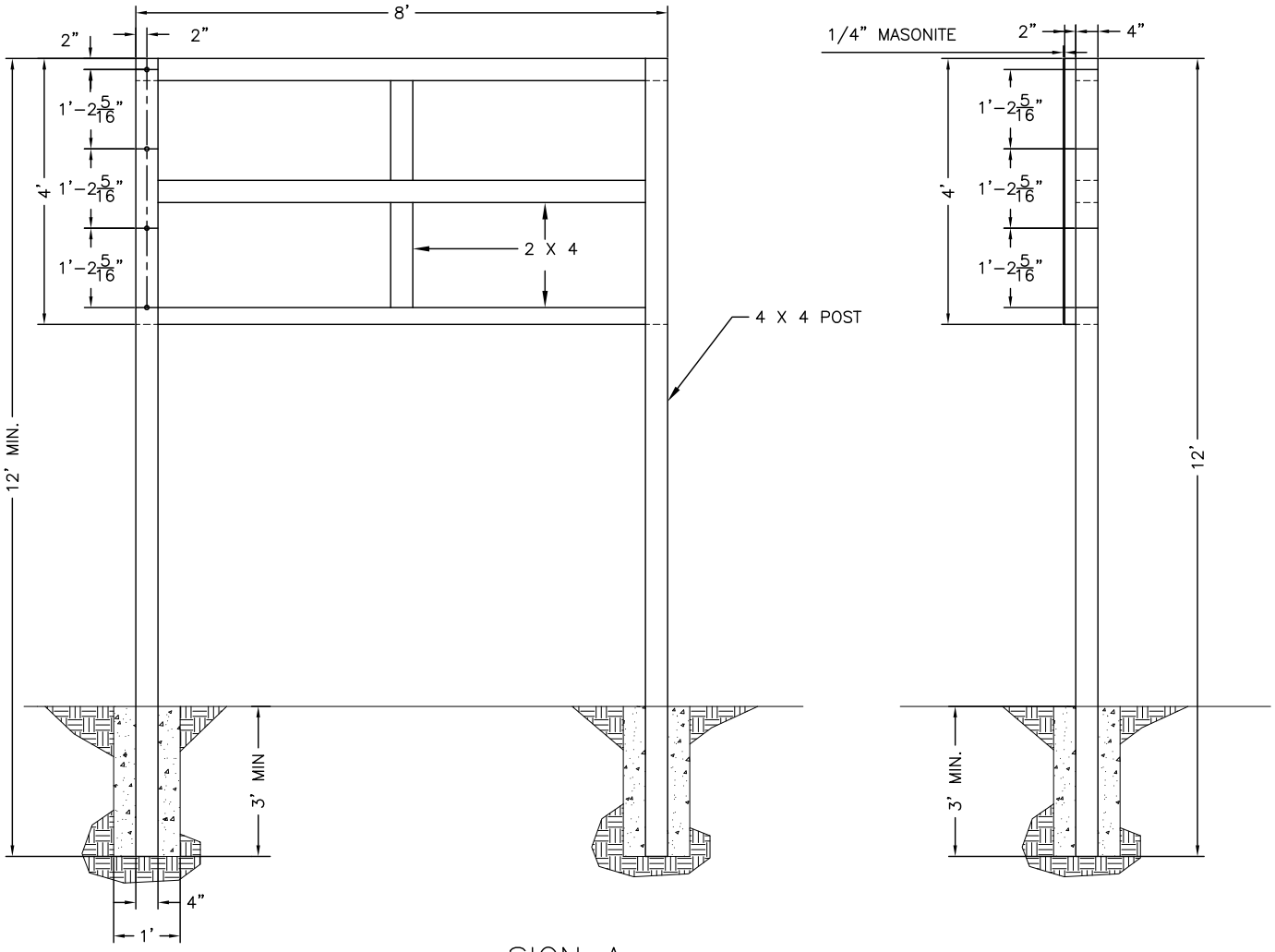

SIGN A
MASONITE SIGN

SCALE: 3/8" = 1'

PROJECT - SIGN A

ECONOMIC DEVELOPMENT ADMINISTRATION

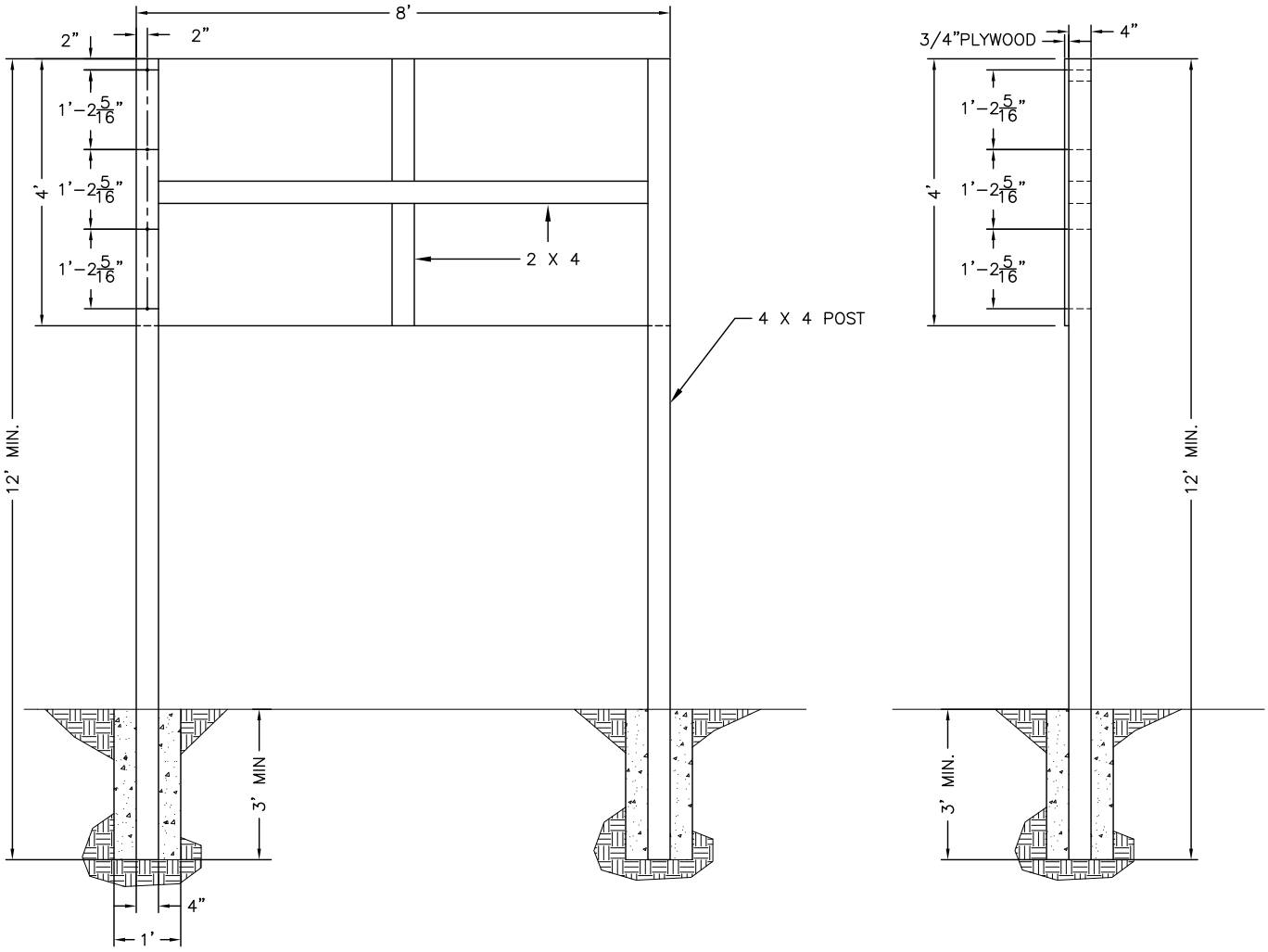

SIGN B
PLYWOOD SIGN
SCALE: 3/8" = 1'

PROJECT - SIGN B

ECONOMIC DEVELOPMENT ADMINISTRATION

U.S. DEPARTMENT OF COMMERCE ECONOMIC DEVELOPMENT ADMINISTRATION

In partnership with

<EDA Grant Recipient Name>

2.25”

13.5”

1.75”

1.75”

EDA

10”

Black
Blue= PMS300
Gold= PMS7406

2.0”

1.5”

4.0”

3.0”

3.0”

3.75”

15.0”

48”

U.S. DEPARTMENT OF COMMERCE ECONOMIC DEVELOPMENT ADMINISTRATION

In partnership with

<EDA Grant Recipient Name>

NOTE: To find the Goals for minority participation (%), click "What to use?" and search for the project's County.

Back

NOTICE OF REQUIREMENTS FOR AFFIRMATIVE ACTION TO ENSURE EQUAL EMPLOYMENT OPPORTUNITY (EXECUTIVE ORDER 11246 AND 41 CFR PART 60-4)

The following Notice shall be included in, and shall be a part of all solicitations for offers and bids on all Federal and federally assisted construction contracts or subcontracts in excess of $10,000.

The Offeror's or Bidder's attention is called to the "Equal Opportunity Clause" and the "Standard Federal Equal Employment Opportunity Construction Contract Specifications" set forth herein.

The goals and timetables for minority and female participation, expressed in percentage terms for the Contractor's aggregate workforce in each trade on all construction work in the covered area, are as follows:

Timetables	Goals for minority participation for each trade	Goals for female participation for each trade
ID Latah *What to use?*	3 %	6.9%

These goals are applicable to all the Contractor's construction work (whether or not it is Federal or federally assisted) performed in the covered area. If the contractor performs construction work in a geographical area located outside of the covered area, it shall apply the goals established for such geographical area where the work is actually performed. With regard to this second area, the contractor also is subject to the goals for both its federally involved and non federally involved construction.
The Contractor's compliance with the Executive Order and the regulations in 41 CFR Part 60-4 shall be based on its implementation of the Equal Opportunity Clause, specific affirmative action obligations required by the specifications set forth in 41 CFR 60-4.3(a), and its efforts to meet the goals. The hours of minority and female employment and training must be substantially uniform throughout the length of the contract, and in each trade and the contractor shall make a good faith effort to employ minorities and women evenly on each of its projects. The transfer of minority or female employees or trainees from Contractor to Contractor or from project to project for the sole purpose of meeting the Contractor's goals shall be a violation of the contract, the Executive Order, and the regulations in 41 CFR Part 60-4. Compliance with the goals will be measured against the total work hours performed.

The Contractor shall provide written notification to the Director of the Office of Federal Contract Compliance Programs within 10 working days of award of any construction subcontract in excess of $10,000 at any tier for construction work under the contract resulting from this solicitation. The notification shall list the name, address and telephone number of the subcontractor; employer identification number of the subcontractor; estimated dollar amount of the subcontract; estimated starting and completion dates of the subcontract; and the geographical area in which the subcontract is to be performed.
As used in this Notice, and in the contract resulting from this solicitation, the "covered area" is:

State of Idaho

County of Latah

City of Moscow

ECONOMIC AREAS

STATE	GOAL (percent)
Maine:	
001 Bangor, ME:	
Non-SMSA Counties	0.8
ME Aroostook; ME Hancock; ME Penobscot; ME Piscataquis; ME Waldo; ME Washington.	
002 Portland-Lewiston, ME:	
SMSA Counties:	
4243 Lewiston-Auburn, ME	0.5
ME Androscoggin.	
6403 Portland, ME	0.6
ME Cumberland; ME Sagadahoc.	
Non-SMSA Counties	0.5
ME Franklin; ME. Kennebec; ME Knox. ME; Lincoln; ME Oxford; ME Somerset; ME York.	
Vermont:	
003 Burlington, VT:	
Non-SMSA Counties	0.8
NH Coos; NH Grafton; NH Sullivan; VT Addison; VT Caledonia; VT Chittenden; VT Essex; VT Franklin; VT Grand Isle; VT Lamoille; VT Orange; VT Orleans; VT Ruthland; VT Washington; VT Windsor.	
Massachusetts:	
004 Boston, MA:	
SMSA Counties:	
1123 Boston - Lowell - Brockton - Lawrence - Haverhill. MA-NH	4.0
MA Essex; MA Middlesex; MA Norfolk; MA Plymouth; MA Suffolk; NH Rockingham.	
4763 Manchester-Nashua, NH	0.7
NH Hillsborough.	
5403 Fail River-New Bedford, MA	1.6
MA Bristol	
9243 Worcester - Fitchburg – Leominster, MA	1.6
MA Worcester.	
Non-SMSA Counties	3.6
MA Barnstable; MA Dukes-, MA Nantucket, NH Belknap; NH Carroll; NH Merrimack; NH Strafford.	
Rhode Island:	
005 Providence - Warwick - Pawtucket, RI:	
SMSA Counties:	
6483 Providence - Warwick - Pawtucket RI	3.0
RI Bristol; RI Kent; RI Providence; RI Washington	
Non-SMSA Counties	3.1
RI Newport.	

Connecticut (Massachusets):

006 Hartford - New Haven - Springfield, CT-MA:
SMSA Counties:
3283 Hartford - New Britain – Bristol, CT 6.9
CT Hartford; CT Middlesex; CT Tolland
5483 New Haven - Waterbury – Meriden, CT 9.0
CT New Haven.
5523 New London - Norwich, CT 4.5
CT New London.
6323 Pittsfield, MA 1.6
MA Berkshire.
8003 Springfield - Chicopee - Holyoke. MA-CT 4.8
MA Hampden; MA Hampshire.
Non-SMSA Counties 5.9
CT Litchfield; CT Windham; MA Franklin; NH Cheshire; VT Windham.

New York:

007 Albany - Schenectady - Troy, NY:
SMSA Counties:
0160 Albany - Schenectady – Troy, NY 3.2
NY Albany; NY Montgommy, NY Rensselaer, NY Saratoga; NY Schenectady.
Non-SMSA Counties 2.6
NY Clinton; NY Columbia; NY Essex; NY Fulton; NY Greene; NY Hamilton, NY Schoharie
NY Warren; NY Washington; VT Bennington.
008Syracuse - Utica, NY:
SMSA Counties:
8160 Syracuse 3.8
NY Madison; NY Onondaga; NY Oswego.
8680 Utica -Rome, NY 2.1
NY Herkimer; NY Oneida.
Non-SMSA Counties 2.5
NY Cayuga; NY Cortland; NY Franklin; NY Jefferson; NY Lewis; NY St. Lawrence.
009 Rochester, NY:
SMSA Counties:
6840 Rochester, NY 5.3
NY Livingston; NY Monroe; NY Ontario; NY Orleans; NY Wayne.
Non-SMSA Counties 5.9
NY Genesee; NY Seneca; NY Yates.
010 Buffalo, NY:
SMSA Counties:
1280 Buffalo, NY 7.7
NY Erie; NY Niagara.
Non-SMSA Counties 6.3
NY Allegany; NY Cattaraugus; NY Chautauqua; NY Wyoming. PA McKean; PA Potter.
011 Binghamton - Elmira, NY:
SMSA Counties
0960 Binghamton, NY - PA 1.1
NY Broome; NY Tioga; PA Susquehanna.
2335 Elmira, NY 2.2
NY Chemung
Non-SMSA Counties 1.2
NY Chenango; NY Delaware; NY Otsego; NY Schuyler; NY Steuben; NY Tompkins;
PA Bradford; PA Tioga.
012 New York, NY:
SMSA Counties:

1163 Bridgeport - Stamford - Norwalk - Danbury, CT 10.2
CT Fairfield.
3640 Jersey City, NJ 12.8
NJ Hudson.
4410 Long Branch - Asbury Park, NJ 9.5
NJ Monmouth
5380 Nassau – Suffolk, NY 5.8
NY Nassau; NY Suffolk.
5460 New Brunswick - Perth Amboy - Sayreville, NJ.
NJ Middlesex 5.8
5600 New York NY, NJ .
NJ Bergen; NY Putnam; NY Rockland; NY Westchester 22.6

The following goal ranges are applicable to the indicated trades in the counties of Bronx, Kings, New York, Queens, and Richmond.

Electricians	9.0 to 10.2
Carpenters	27.6 to 32.0
Steam fitters	12.2 to 13.5
Metal lathers	24.6 to 25.6
Painters	28.6 to 26.0
Operating Engineers	25.6 to 26.0
Plumbers	12.0 to 14.5
Iron workers (struct)	25.9 to 32.0
Elevator constructors	5.5 to 6.5
Bricklayers	13.4 to 15.5
Asbestos workers	22.8 to 28.0
Roofers	6.3 to 7.5
Iron workers (ornamental)	22.4 to 23.0
Cement masons	23.0 to 27.0
Glaziers	16.0 to 20.0
Plasterers	15.8 to 18.0
Teamsters	22.0 to 22.5
Boilermakers	13.0 to 15.5
All others	16.4 to 17.5

5640 Newark, NJ 17.3
NJ Essex; NJ Morris; NJ Somerset; NJ Union.
6040 Paterson - Clifton - Passaic., NJ 12.9
NJ Passaic.
6460 Poughkeepsie, NY 6.4
NY Dutchese
Non-SMSA Counties 17.0
NJ Hunterdon; NJ Ocean; NJ Sussex; NY Orange; NY Sullivan; NY Ulster; PA Pike.

Pennsylvania:

013 Scranton - Wilkes-Barre, PA:
SMSA Counties
5745 Northeast Pennsylvania 0.6
PA Lackawanna; PA Luzerne; PA Monroe.
Non-SMSA Counties 0.5
PA Columbia; PA Wayne; PA Wyoming.
014 Williamsport, PA:
SMSA Counties
9140 Williamsport, PA 1.0

PA Lycoming.
Non-SMSA Counties 0.7
PA Cameron; PA Centre; PA Clearfield; PA Clinton; PA Elk; PA Jefferson;
PA Montour; PA Northumberland; PA Snyder; PA Sullivan; PA Union.
015 Erie, PA:
SMSA Counties:
2360 Erie, PA 2.8
PA Erie.
Non-SMSA Counties 1.8
PA Clarion; PA Crawford; PA Forest; PA Venango; PA Warren.
016 Pittsburgh, PA:
SMSA Counties
0280 Altoona, PA 1.0
PA Blair.
3680 Johnson, PA 1.3
PA Cambria; PA Somerset.
6280 Pittsburgh, PA 6.3
PA Allegheny; PA Beaver; PA Washington; PA Westmoreland.
Non-SMSA Counties 4.8
MD Allegany; MD Garrett; PA Armstrong; PA Bedford; PA Butler;
PA Fayette; PA Greene; PA Indiana; WV Mineral.
017 Harrisburg - York - Lancaster, PA:
SMSA Counties
3240 Harrisburg PA 6.2
PA Cumberland; PA Dauphin; PA Perry.
4000 Lancaster, PA 2.0
PA Lancaster.
9280 York, PA 2.2
PA Adams; PA York.
Non-SMSA-Counties 3.1
PA Franklin; PA Fulton; PA Huntingdon; PA Juniata; PA Lebanon; PA Mifflin.
018 Philadelphia, PA:
SMSA Counties
0240 Allentown - Bethlehem - Easton, PA-NJ 1.6
NJ Warren; PA Carbon; PA Lehigh; PA Northhampton.
0560 Atlantic City, NJ 18.2
NJ Atlantic
6160 Philadelphia, PA-NJ 17.3
NJ Burlington; NJ Camden; NJ Glouchester; PA Bucks; PA Chester;
PA Delaware; PA Montgomery; PA Philadelphia.
8680 Reading, PA 2.5
PA Berks.
8480 Trenton, NJ 16.4
NJ Mercer.
8760 Vineland - Millville - Bridgeton, NJ 16.0
NJ Cumberland.
9160 Wilmington, DE-NJ-MD 12.3
DE Now Castle; MD Cecil; NJ Salem.
Non-SMSA Counties 14.5
DE Kent; DE Sussex; NJ Cape May; PA Schuylkill.

Maryland:

019 Baltimore, MD
SMSA Counties:
0720 Baltimore MD 23.0
MD Anne Arundel; MD Baltimore; MD Carroll; MD Harford; MD Howard;
MD Baltimore City.

Non-SMSA Counties 23.6
MD Caroline; MD Dorchester; MD Kent; MD Queen Annes; MD Somerset;
MD Talbot; MD Wicomico; MD Worcester; VA Accomack; VA Northamptom

Washington DC:

020 Washington DC:
SMSA Counties
8840 Washington, DC-MD-VA 28.0
DC District of Columbia; MD Charles; Montgomery; MD Prince Georges;
VA Arlington; VA Fairfax; VA Loudoun; VA Prince William; VA Alexandria;
VA Fairfax City; VA Falls Church.
Non-SMSA Counties 25.2
MD Calvert; MD Frederick; MD St. Marys; MD Washington; VA Clarke;
VA Culpepper; VA Fauquier; VA Frederick; VA King George; VA Page;
VA Rappahannock; VA Shenandoah; VA Spottsylvania; VA Stafford; VA Warren;
VA Westmoreland; VA Fredericksburg; VA Winchester; WV Berkeley; WV Grant;
WV Hampshire;. WV Hardy; WV Jefferson; WV Morgan.

Virginia:

021 Roanoke-Lynchburg VA:
SMSA C4unties:
4640 Lynchburg, VA 19.3
VA Amherst; VA Appomattox; VA Campbell; VA Lynchburg.
6800 Roanoke, VA 10.2
VA Botetourt; VA Craig; VA Roanoke VA; VA Roanoke City; *VA* Salem.
Non-SMSA Counties 12.0
VA Alleghany, VA Augusta; VA Bath; VA Bedford; VA Bland; VA Carroll; VA Floyd;
VA Franklin; VA Giles; VA Grayson; VA Henry; VA Highland; VA Montgomery;
VA Nelson; VA Patrick; VA Pittsylvania; VA Pulaski; VA Rockbridge;
VA Rockingham; VA Wythe; VA Bedford City; VA Buena Vista; VA Clifton Forge;
VA Covington; VA Danville; VA Galex; VA Harrisonburg; VA Lexington; VA Martinsville;
VA Radford; VA Staunton; VA Waynesboro; WV Pendleton.
022 Richmond, VA:
SMSA Counties:
6140 Petersburg - Colonial Heights – Hopewell, VA 30.6
VA Dinwiddie; VA Prince George; VA Colonial Heights; VA Hopewell; VA Petersburg.
6760 Richmond, VA 24.9
VA Charles City; VA Chesterfield; VA Goochland; VA Hanover; VA Henrico;
VA New Kent; VA Powhatan; VA Richmond.
Non-SMSA Counties 27.9
VA Albemarle; VA Amelia; VA Brunswick; VA Buckingham; VA Caroline; VA Charlotte;
VA Cumberland; VA Essex; VA Fluvanna; VA Greene; VA Greensville; VA Halifax;
VA King And Queen; VA King William; VA Lancaster; VA Louisa; VA Lunenberg;
VA Madison; VA Mecklenburg; VA Northumberland; VA Nottoway; VA Orange; VA Prince
Edward; VA Richmond; VA Sussex; VA Charlottesville; VA Emporia; VA South Boston.

023 Norfolk - Virginia Beach - Newport News,VA:
SMSA Counties:
5680 Newport News-Hampton, VA.... 27.1
VA Gloucester, VA James City; VA York; VA Hampton; VA Newport News;
VA Williamsburg.
5720 Norfolk - Virginia Beach – Portsmouth VA – NC 26.6
NC Currituck; VA Chesapeake; VA Norfolk; VA Portsmouth; VA Suffolk;
VA Virginia Beach.

Non-SMSA Counties 29.7
NC Bertie; NC Camden; NC Chowan; NC Gates; NC Hertford; NC Pasquotank; NC Perquimans; VA Isle of Wight; VA Matthews; VA Middlesex; VA Southampton; VA Surry; VA Franklin.

North Carolina:

024 Rocky Mount - Wilson - Greenville NC:
Non-SMSA Counties 31.7
NC Beaufort; NC Carteret; NC Craven; NC Dare; NC Edgecombe; NC Greene; NC Halifax; NC Hyde; NC Jones; NC Lenoir; NC Martin; NC Nash; NC Northampton; NC Pamlico; NC Pitt; NC Tyrrell; NC Washington; NC Wayne; NC Wilson

025 Wilmington, NC:
SMSA Counties:
9200 Wilmington, NC 20.7
NC Brunswick; NC New Hanover.
Non-SMSA counties 23.5
NC Columbus; NC Duplin; NC Onslow; NC Pender.

026 Fayetteville, NC:
SMSA Counties:
2560 Fayetteville, NC 26.2
NC Cumberland.
Non-SMSA Counties 33.5
NC Bladen; NC Hoke; NC Richmond; NC Robeson; NC Sampson; NC Scotland.

027 Raleigh - Durham, NC.
SMSA Counties:
6640 Raleigh – Durham 22.8
NC Durham; NC Orange; NC Wake.
Non-SMSA Counties 24.7
NC Chatham; NC Franklin; NC Granville; NC Harnett; NC Johnston; NC Lee; NC Person; NC Vance; NC Warren.

028 Greensboro - Winston Salem - High Point, NC:
SMSA Counties:
1300 Burlington, NC 16.2
NC Alamance.
3120 Greensboro - Winston Salem – High Point NC 16.4
NC Davidson; NC Forsyth; NC Guilford; NC Randolf; NC Stokes; NC Yadkin.
Non-SMSA Counties 15.5
NC Alleghany; NC Ashe; NC Caswell; NC Davie; NC Montgomery; NC Moore; NC Rockingham; NC Surry; NC Watauga; NC Wilkes.

029 Charlotte, NC:
SMSA Counties:
1520 Charlotte – Gastonia, NC 18.5
NC Gaston; NC Mecklenburg; NC Union.
Non-SMSA Counties 15.7
NC Alexander; NC Anson; NC Burke; NC Cabarrus; NC Caldwell; NC Catawba; NC Cleveland; NC Iredell; NC Lincoln; NC Rowan; NC Rutherford; NC Stanley; SC Chester; SC Lancaster SC York.

030 Asheville, NC
Non-SMSA Counties:
0480 Asheville, NC 8.5
NC Buncombe; NC Madison.
Non-SMSA Counties 6.3
NC Avery; NC Cherokee; NC Clay; NC Graham; HC Heywood; NC Henderson; NC Jackson; NC McDowell; NC Macon; NC Mitchell; NC Swain; NC Transylvania; NC Yancey.

South Carolina:

031 Greenville – Spartanburg, SC:
SMSA Counties:
3160 Greenville –Spartanburg, SC 16.0
SC Greenville; SC Pickens; SC Spartanburg.
Non-SMSA Counties 17.8
SC Polk; SC Abbeville; SC Anderson; SC Cherokee; SC Greenwood; SC Laurens; SC Oconee; SC Union.

032 Columbia, SC
SMSA Counties:
1760 Columbia, SC 23.4
SC Lexington; SC Richland.
Non-SMSA Counties 32.0
SC Calhoun SC Clarendon; SC Fairfield; SC Kershaw; SC Lee; SC Newberry; SC Orangeburg; SC Saluda; SC Sumter

033 Florence, SC
Non-SMSA Counties 33.0
SC Chesterfield; SC Darlington; SC Dillon; SC Florence; SC Georgetown; SC Horry; SC Marion; SC Marlboro; SC Williamsburg.

034 Charleston - North Charleston, SC
SMSA Counties
1440 Charleston - North Charleston, SC 30.0
SC Berkeley; SC Charleston; SC Dorchester.
Non-SMSA Counties 30.7
SC Collection

Georgia:

035 Augusta, GA:
SMSA Counties:
0600 Augusta, GA – SC 27.2
GA Columbia; GA Richmond; SC Aiken
Non-SMSA Counties 32.8
GA Burke; GA Emanuel; GA Glascock; GA Jefferson; GA Jenkins; GA Lincoln; GA McDuffie; GA Taliaferro; GA Warren; GA Wilkes; SC Allendale, SC Bamberg; SC Barnwell; SC Edgefield; SC McCormick

036 Atlanta, GA
SMSA Counties
0520 Atlanta 21.2
GA Butts; GA Cherokee; GA Clayton; GA Cobb; GA Dekalb; GA Douglas; GA Fayette; GA Forsyth; GA Fulton; GA Gwinnett; GA Henry, GA Newton; GA Paulding; GA Rockdale; GA Walton
Non-SMSA Counties 19.5
GA Banks; GA Barrow; GA Bartow; GA Carroll; GA Clarke; GA Coweta; GA Dawson; GA Elbert; GA Fannin; GA Floyd; GA Franklin; GA Gilmer; GA Gordon; GA Greene; GA Habersham; GA Hall; GA Haralson; GA Hart; GA Heard; GA Jackson; GA Jasper; GA Lamar, GA Lumpkin; GA Madison, GA Morgan; GA Oconee, GA Oglethorpe; GA Pickens; GA Pike; GA Polk; GA Rabun, GA Spalding; GA Stephens; GA Towns; GA Union; GA Upson; GA White.

037 Columbus, GA:
SMSA Counties
1800 Columbus 29.6
AL Russell; GA Chattahoochee; GA Columbus.
Non-SMSA Counties 31.6
AL Chambers; AL Lee; GA Harris; GA Marion; GA Meriwether; GA Quitman; GA Schley; GA Stewart; GA Sumter; GA Talbot; GA Troup; GA Webster.

038 Macon, GA:
SMSA Counties
4660 Macon, GA _____ 27.5
GA Bibb; GA Houston; GA Jones; GA Twiggs.
Non-SMSA Counties _____ 31.7
GA Baldwin; GA Bleckley; GA Crawford; GA Crisp; GA Dodge; GA Dooly; GA Hancock; GA Johnson; GA Laurens; GA Macon; GA Monroe; GA Peach; GA Pulaski; GA Putnam. GA Taylor; GA Telfair; GA Treutlen; GA Washington; GA Wheeler; GA Wilcox; GA Wilkinson.
039 Savannah, GA:
SMSA Counties:
7520 Savannah, GA _____ 30.6
GA Bryan; GA Chatham; GA Effingham
Non-SMSA Counties _____ 29.8
GA Appling; GA Atkinson; GA Bacon; GA Bullock; GA Candler; GA Coffee; GA Evans; GA Jeff Davis; GA Liberty; GA Long; GA McIntosh; GA Montgomery; GA Screven; GA Tattinall; GA Toombs; GA Wayne; SC Beaufort; SC Hampton; SC Jasper.
040 Albany, GA
SMSA Counties
0120 Albany, GA _____ 32.1
GA Dougherty; GA Lee.
Non-SMSA Counties _____ 31.1
GA Baker; GA Ben HiII; GA Berrien; GA Brooks; GA Calhoun; GA Clay; GA Clinch; GA Colquitt; GA Cook; GA Decatur; GA Early; GA Echols; GA Grady; GA Irwin; GA Lanier; GA Lowndes; GA Miller; GA Mitchell; GA Randolph; GA Seminole, GA Terrell; GA Thomas; GA Tift; GA Turner; GA Worth.

Florida:

041 Jacksonville, FL:
SMSA Counties
2900 Gainesville, FL _____ 20.6
FL Alachua
3600 Jacksonville, FL _____ 21.8
FL Baker; FL Clay; FL Duval; FL Nassau; FL St. Johns.
Non-SMSA Counties _____ 22.2
FL Bradford; FL Columbia; FL Dade; FL Gilchrist; FL Hamilton; FL LaFayetle; FL Levy; FL Marion; FL Putnam; FL Suwannee; FL Union; GA Brantley; GA Camden; GA Charlton; GA Glynn; GA Pierce; GA Ware.
042 Orlando - Melbourne - Daytona Beach, FL.
SMSA Counties:
2020 Daytona Beach, FL _____ 15.7
FL Volusia.
4900 Melbourne – Tutusville – Cocoa, FL _____ 10.7
FL Brevard.
5960 Orlando, FL _____ 15.5
FL Orange; FL Osceola; FL Seminole.
Non-SMSA Counties _____ 14.9
FL Flagler; FL Lake; FL Sumter.
043 Miami - Fort Lauderdale, FL:
SMSA Counties:
2680 Fort Lauderdale – Hollywood, FL _____ 15.5
FL. Broward.
5000 Miami, FL _____ 39.5
FL Dade.
8960 West Palm Beach - Boca Raton, FL _____ 22.4
FL Palm Beach.

Non-SMSA Counties 30.4
FL Glades; FL Hendry; FL Indian River; FL Martin; FL Monroe;
FL Okeechobee; FL St. Lucie.

044 Tampa - St Petersburg, FL
SMSA Counties:
1140 Bradenton, FL 15.9
FL Manatee.
2700 Fort Myers, FL 15.3
FL Lee.
3980 Lakeland - Winter Haven, FL 18.0
FL Polk
7510 Sarasota, FL 10.5
FL Sarasota.
8280 Tampa - St. Petersburg, FL 17.9
FL Hillsborough, FL Pasco; FL Pinellas
Non-SMSA Counties 17.1
FL Charlotte; FL Citrus; FL Collier, FL Desoto; FL Hardee; FL Hernando; FL Highlands.

045 Tallahassee. FL:
SMSA Counties:
8240 Tallahassee, FL 24.3
FL Leon; FL Wakulla.
Non-SMSA Counties: 29.5
FL Calhoun; FL Franklin; FL Gadsden; FL Jackson; FL Jefferson; FL Liberty;
FL Madison; FL Taylor.

046 Pensacola - Panama City, FL
SMSA Counties:
8615 Panama City, FL 14.1
FL Bay.
6080 Pensacola, FL 18.3
FL Escambia; FL Santa Rosa.
Non-SMSA Counties 15.4
FL Gulf; FL Holmes; FL Okaloosa; FL Walton; FL Washington.

Alabama:

047 Mobile, AL
SMSA Counties:
5160 Mobile, AL 26.9
AL Baldwin; AL Mobile.
6026 Pascagoula - Moss, Point MS 16.9
MS Jackson.
Non-SMSA Counties 26.4
AL Choctaw; AL Clarke; AL Conecuh; AL Escambia; AL Monroe; AL Washington; AL Wilcox;
MS George; MS Greene.

048 Montgomery, AL:
SMSA Counties
5240 Montgomery, AL 29.9
AL Autauga; AL Elmore; AL Montgomery.
Non-SMSA Counties 29.9
AL Barbour; AL Bullock; AL Butler; AL Coffee; AL Coosa; AL Covington;
AL Crenshaw; AL Dale; AL Dallas; AL Geneva; AL Henry; AL Houston;
AL Lowndes; AL Macon; AL Perry; AL Pike; AL Tallapoosa.

049 Birmingham, AL:
SMSA Counties:
0450 Anniston, AL 14.3
AL Calhoun.

1000 Birmingham, AL 24.9
AL Jefferson; AL St. Clair; AL Shelby; AL Walker; AL Etowah
8600 Tuscaloosa, AL 20.6
AL Tuscaloosa.
Non-SMSA Counties 20.7
AL Bibb; AL Blount; AL Cherokee; AL Chilton; AL Clay; AL Cleburne; AL Cullman; AL Fayette; AL Greene; AL Hale; AL Lamar; AL Marion; AL Pickens; AL Randolph; AL Sumter; AL Talladega; AL Winston.

050 Huntsville – Florence, AL:
SMSA Counties:
2650 Florence, AL 11.9
AL Colbert; AL Lauderdale.
3440 Huntsville, AL 12.0
AL Limestone; AL Madison; AL Marshall.
Non-SMSA Counties 11.2
AL Franklin; AL Lawrence AL Morgan; TN Lincoln.

Tennessee:

051 Chattanooga, TN:
SMSA Counties:
1560 Chattanooga, TN – GA 12.5
GA Catoosa; GA Dade; GA Walker; TN Hamilton;TN Marion; TN Sequatchie.
Non-SMSA Counties 8.6
AL De Kalb; AL Jackson; GA Chattooga; GA Murray; GA Whitfield; TN Bledsoe; TN Bradley; TN Grundy; TN McMinn; TN Meigs; TN Monroe; TN Polk; TN Rhea.

052 Johnson City - Kingsport - Bristol, TN-VA:
SMSA Counties:
3660 Johnson City - Kingsport - Bristol. TN – VA 2.6
TN Carter; TN Hawkins; TN Sullivan; TN Unicoi; TN Washington; VA Scott; VA Washington; VA Bristol.
Non-SMSA Counties 3.2
TN Greene; TN Hancock; TN Johnson; VA Buchanan; VA Dickenson; VA Lee; VA Russell; VA Smyth; VA Tazewell; VA Wise; VA Norton; WV McDowell, WV Mercer.

053 Knoxville, TN
SMSA Counties:
3840 Knoxville, TN 6.6
TN Anderson; TN Blount; TN Knox; TN Union.
Non-SMSA Counties 4.5
KY Bell; KY Harlan; KY Knox; KY Laurel; KY McCreary; KY Wayne; KY Whitley; TN Campbell; TN Claiborne; TN Cocke; TN Cumberland; TN Fentress; TN Grainger, TN Hamblen; TN Jefferson; TN Loudon; TN Morgan; TN Roane; TN Scott; TN Sevier.

054 Nashville, TN:
SMSA Counties:
1660 Clarksville - Hopkinsville, TN - KY 18.2
KY Christian; TN Montgomery.
5360 Nashville - Davidson, TN 15.8
TN Cheatham, TN Davidson; TN Dickson; TN Robertson; TN Rutherford; TN Sumner; TN Williamson; TN Wilson.
Non-SMSA Counties 12.0
KY Allen; KY Barren; KY Butler; KY Clinton; KY Cumberland; KY Edmonson; KY Logan; KY Metcalfe; KY Monroe; KY Simpson; KY Todd; KY Trigg; KY Warren; TN Bedford; TN Cannon; TN Clay; TN Coffee; TN DeKalb; TN Franklin; TN Giles; TN Hickman; TN Houston; TN Humphreys; TN Jackson; TN Lawrence; TN Lewis; TN Macon; TN Marshall; TN Maury; TN Moore; TN Overton; TN Perry; TN Pickett;

TN Putnam; TN Smith; TN Stewart; TN Trousdale; TN Van Buren; TN Warren; TN Wayne; TN White.

055 Memphis, TN:
SMSA Counties:
4920 Memphis, TN-AR-MS 32.3
AR Critteriden; MS Do Soto; TN Shelby; TN Tipton.
Non-SMSA Counties 26.5
AR Clay; AR Craighead; AR Cross; AR Greene; AR Lawrence; AR Lee; AR Mississippi; AR Phillips; AR. Poinsett; AR Randolph; AR St. Francis; MS Alcorn; MS Benton; MS Bolivar; MS Calhoun; MS Carroll; MS Chickasaw, MS Clay; MS Coahoma; MS Grenada; MS Itawamba; MS Lafayette; MS Lee; MS Leflore; MS Marshall; MS Monroe; MS Montgomery; MS Panola; MS Pontotoc; MS Prentiss; MS Quitman; MS Sunflower; MS Tallahatchie; MS Tate; MS Tippah; MS Tishomingo; MS Union; MS Washington; MS Webster. MS Yalobusha; MO Dunklin; MO New Madrid; MO Pemiscot; TN Benton; TN Carroll; TN Chester; TN Crockett; TN Decatur; TN Dyer; TN Fayette; TN Gibson; TN Hardeman; TN Hardin; TN Haywood; TN Henderson; TN Henry; TN Lake; TN Lauderdale; TN McNairy; TN Madison; TN Obion; TN Weakley.

Kentucky:

056 Paducah, KY:
Non-SMSA Counties 5.2
IL Hardin; IL Massac; IL Pope; KY Ballard; KY Caldwell; KY Calloway. KY Carlisle; KY Crittenden; KY Fulton; KY Graves; KY Hickman; KY Livingston; KY Lyon. KY McCracken; KY Marshall.

057 Louisville, KY:
SMSA Counties:
4520 Louisville, KY-IN 11.2
IN Clark; IN Floyd; KY Bullitt; KY Jefferson; KY Oldham.
Non-SMSA Counties 9.6
IN Crawford; IN Harrison; IN Jefferson; IN Orange; IN Scott; IN Washington; KY Breckinridge; KY Grayson; KY Hardin; KY Hart; KY Henry; KY Larue; KY Marion; KY Meade; KY Nelson; KY Shelby; KY Spencer; KY Trimble; KY Washington.

058 Lexington, KY
SMSA Counties
4280 Lexington-Fayette, KY 10.8
KY Bourbon; KY Clark; KY Fayette; KY Jessamine; KY Scott; KY Woodford.
Non-SMSA Counties 7.0
KY Adair KY Anderson; KY Bath; KY Boyle; KY Breathitt; KY Casey; KY Clay; KY Estill; KY Franklin; KY Garrard; KY Green; KY Harrison; KY Jackson; KY Knott; KY Lee; KY Leslie; KY Letcher; KY Lincoln; KY Madison; KY Magoffin; KY Menifee; KY Mercer; KY Montgomery; KY Morgan. KY Nicholas; KY Owsley; KY Perry; KY Powell; KY Pulaski; KY Rockcastle; KY Russell; KY Taylor; KY Wolfe.

West Virginia:

059 Huntington, WV:
SMSA Counties:
3400 Huntington – Ashland, WV-KY-OH 2.9
KY Boyd; KY Greenup; OH Lawrence; WV Cabell; WV Wayne.
Non-SMSA Counties 2.5
KY Carter; KY Elliott; KY Floyd; KY Johnson; KY Lawrence; KY Martin; KY Pike; KY Rowan; OH Gallia; WV Lincoln; WV Logan; WV Mason; WV Mingo.

060 Charleston, WV
SMSA Counties:

1480 Charleston, WV 4.9
WV Kanawha; WV Putnam.
Non-SMSA Counties 4.2
WV Boone; WV Braxton; WV Calhoun; WV Clay; Fayette; WV Gilmer; WV Greenbrier; WV Jackson; WV Monroe; WV Nicholas; WV Pocahontas; WV Raleigh; WV Roane; WV Summers; WV Webster; WV Wyoming.
061 Morgantown-Fairmont; WV:
Non-SMSA Counties 2.1
WV Barbour; WV Doddridge; WV Harrison; WV Lewis; WV Marion; WV Monongalia; WV Preston; WV Randolph; WV Taylor; WV Tucker, WV Upshur.
062 Parkersburg, WV:
SMSA Counties:
6020 Parkersburg-Marietta. WV-OH 1.1
OH Washington; WV Wirt; WV Wood.
Non-SMSA Counties 1.2
WV Pleasants; WV Ritchie.
063 Wheeling - Steubenville - Wierton, WV-OH:
SMSA Counties:
8080 Steubenville-Wierton, OH-WV 4.3
OH Jefferson; WV Brooke; WV Hancock.
9000 Wheeling, WV-OH 2.4
OH Belmont; WV Marshall; WV Ohio.
Non-SMSA Counties 3.0
OH Harrison; OH Monroe; WV Tyler; WV Wetzel.

Ohio:

064 Youngstown-Warren, OH:
SMSA Counties:
9320 Youngstown-Warren, OH 9.4
OH Mahoning; OH Trumbull.
NonSMSA Counties 6.7
OH Columbiana; PA Lawrence; PA Mercer.
065 Cleveland, OH:
SMSA Counties:
0080 Akron, OH 7.8
OH Portage; OH Summit.
1320 Canton, OH 6.1
OH Carroll; OH Stark.
1680 Cleveland, OH 16.1
OH Cuyahoga; OH Geauga; OH Lake; OH Medina.
4440 Lorain-Elyria, OH 9.3
OH Lorain.
4800 Mansfield, OH 6.3
OH Richland.
Non-SMSA Counties:
OH Ashland; OH Ashtabula; OH Coshocton; OH Crawford; OH Erie; OH Holmes; OH Huron; OH Tuscarawas; OH Wayne.
066 Columbus, OH:
SMSA Counties:
1840 Columbus, OH 10.6
OH Delaware; OH Fairfield; Franklin; OH Madison; OH Pickaway.
Non-SMSA Counties 7.3
OH Athens; OH Fayette; OH Guernsey; OH Hocking; OH Jackson; OH Knox; OH Licking; OH Marion; OH Meigs; OH Morgan; OH Morrow; OH Muskingum; OH Noble; OH Perry OH Pike; OH Ross; OH Scioto; OH Union; OH Vinton.
067 Cincinnati, OH:
SMSA Counties:

1640 Cincinnati, OH-KY-IN 11.0
IN Dearborn; KY Boone; KY Campbell; KY Kenton; OH Clermont;
OH Hamilton; OH Warren.
3200 Hamilton-Middletown, OH 5.0
OH Butler.
Non-SMSA Counties 9.2
IN Franklin; IN Ohio; IN Ripley; IN Switzerland; KY Bracken; KY Carroll;
KY Fleming; KY Gallatin; KY Grant; KY Lewis; KY Mason; KY Owen; KY Pendleton;
KY Robertson; OH Adams; OH Brown; OH Clinton; OH Highland.
068 Dayton, OH:
SMSA Counties:
2000 Dayton, OH 11.5
OH Greene; ON Miami; OH Montgomery; OH Preble.
7960 Springfield, OH 7.8
OH Champaign; OH Clark.
Non-SMSA Counties 9.9
OH Darke; OH Logan; ON Shelby.
069 Lima, OH:
SMSA Counties:
4320 Lima, OH 4.4
OH Allen; OH Auglaize; OH Putnam; OH Van Wert.
Non-SMSA Counties 3.5
OH Hardin; OH Mercer.
070 Toledo, OH:
SMSA Counties:
8400 Toledo, OH-MI 8.8
MI Monroe; OH Fulton; OH Lucas; OH Ottawa; OH Wood.
Non-SMSA Counties 7.3
MI Lenawee; OH Hancock; OH Henry; OH Sandusky; OH Seneca; OH Wyandot.

Michigan:

071 Detroit, MI:,
SMSA Counties:
0440 Ann Arbor, MI 8.5
MI Washtenaw.
2160 Detroit, MI 17.7
MI Lapeer; MI Livingston; MI Macomb; MI Oakland; MI St. Clair; Mi Wayne.
2640 Flint, MI 12.6
MI Genesee; MI Shiawassee.
Non-SMSA Counties 16.7
MI Sanilac.
072 Saginaw, MI:
SMSA Counties:
0800 Bay City, MI 2.2
MI Bay.
6960 Saginaw, MI 14.3
MI Saginaw.
Non-SMSA Counties 5.2
MI Alcona; MI Alpena; MI Arenac; MI Cheboygan; MI Chippewa; MI Clare;
MI Crawford; MI Gladwin; MI Gratiot; MI Huron; MI losco; MI Isabella; MI Luce;
MI Mackinac; MI Midland; MI Montmorency; MI Ogemaw; MI Oscoda; MI Otsego;
MI Presque Isle; MI Roscommon; MI Tuscola.
073 Grand Rapids, MI:
SMSA Counties:
3000 Grand Rapids, MI 5.2
MI Kent; MI Ottawa.

5320 Muskegon - Norton Shores - Muskegon Heights, MI 9.7
MI Muskegon; MI Oceana.
Non-SMSA Counties 4.9
MI Allegan; MI Antrim; MI Benzie; MI Charlevoix; MI Emmet; MI Grand Traverse; MI Kalkaska; MI Lake; MI Leelanau; MI Manistee; MI Mason; MI Mecosta; MI Missaukee; MI Montcalm; MI Newaygo; MI Osceola; MI Wexford.
074 Lansing - Kalamazoo, MI:
SMSA Counties:
0780 Battle Creek, MI 7.2
MI Barry; MI Calhoun.
3520 Jackson, MI 5.1
MI Jackson.
3720 Kalamazoo-Portage, MI 5.9
MI Kalamazoo; MI Van Buren.
4040 Lansing-East Lansing, MI 5.5
MI Clinton; MI Eaton; MI Ingham; MI Ionia.
Non-SMSA Counties 5.5
MI Branch; MI Hillsdale.

Indiana:

075 South Bend, IN:
SMSA Counties:
7800 South Bend, IN 7.1
IN Marshall; IN St. Joseph,
2330 Elkhart IN 4.0
IN Elkhart.
Non-SMSA Counties 6.2
IN Fulton; IN Kosciusko; IN Lagrange; MI Berrien; MI Cass; MI St. Joseph.
076 Fort Wayne, IN:
Non-SMSA Counties 4.4
IN Allen; IN Dekalb; IN Wells; IN Huntington; IN Noble; IN Steuben; IN Whitley; OH Defiance; OH Paulding; OH Williams.
077 Kokomo-Marion, IN:
SMSA Counties:
3850 Kokomo, IN 4.4
IN Howard; IN Tipton.
Non-SMSA Counties 3.7
IN Cass; IN Grant; IN Miami; IN Wabash.
078 Anderson-Muncie, IN:
SMSA Counties:
0400 Anderson, IN 4.9
IN Madison.
5280 Muncie, IN 5.3
IN Delaware.
Non-SMSA Counties 3.9
IN Blackford; IN Fayette; IN Henry; IN Jay; IN Randolph; IN Union; IN Wayne.
079 Indianapolis, IN:
SMSA Counties:
1020 Bloomington, IN 3.1
IN Monroe.
3480 Indianapolis, IN 12.5
IN Boone; IN Hamilton; IN Hendricks; IN Johnson; IN Marion; IN Morgan; IN Shelby.
Non-SMSA Counties 9.7
IN Bartholomew; IN Brown; IN Daviess; IN Decatur; IN Greene; IN Jackson; IN Jennings; IN Lawrence; IN Martin; IN Owen; IN Putnam; IN Rush.

080 Evansville, IN:
SMSA Counties
2440 Evansville, IN-KY 4.8
IN Gibson; IN Posey; IN Vanderburgh; IN Warrick; KY Henderson.
5990 Owensboro, KY 4.7
KY Daviess.
Non-SMSA Counties 3.5
IL Edwards; IL Gallatin; IL Hamilton; IL Lawrence; IL Saline; IL Wabash;
IL White; IN Dubois; IN Knox; IN Perry; IN Pike; IN Spencer; KY Hancock;
KY Hopkins; KY McLean; KY Muhlenberg; KY Ohio; KY Union; KY Webster.
081 Terre Haute, IN:
SMSA Counties:
8320 Terre Haute, IN 3.1
IN Clay; IN Sullivan; IN Vermillion; IN Vigo.
Non-SMSA Counties 2.5
IL Clark; IL Crawford; IN Parke.
082 Lafayette, IN:
SMSA Counties:
3920 Lafayette - West Lafayette, IN 2.7
IN Tippecanoe.
Non-SMSA Counties 1.5
IN Benton; IN Carroll; IN Clinton; IN Fountain; IN Montgomery;
IN Warren; IN White.

Illinois:

083 Chicago, IL:
SMSA Counties:
1600 Chicago, IL 19.6
IL Cook; IL Du Page; IL Kane; IL Lake; IL McHenry; IL Will.
2960 Gary - Hammond - East Chicago, IN 20.9
IN Lake; IN Porter.
3740 Kankakee. IL 9.1
IL Kankakee.
3800 Kensoha, WI 3.0
WI Kenosha.
Non-SMSA Counties 18.4
IL Bureau; IL De Kalb; IL Grundy; IL Iroquois; IL Kendall; IL La Salle;
IL Livingston; IL Putnam; IL Jasper; IN Laporte; IN Newton; IN Pulaski; IN Starke.
084 Champaign-Urbana, IL:
SMSA Counties:
1400 Champaign - Urbana – Rantoul, IL 7.8
IL Champaign.
Non-SMSA Counties 4.8
IL Coles; IL Cumberland; IL Douglas; IL Edgar; IL Ford; IL Platt; IL Vermilion.
085 Springfield-Decatur, IL:
SMSA Counties:
2040 Decatur, IL 7.6
IL Macon.
7880 Springfield, IL 4.5
IL Menard; IL Sangamon.
Non-SMSA Counties 4.0
IL Cass; IL Christian; IL De Witt; IL Logan; IL Morgan; IL Moultrie;
IL Scott; IL Shelby.
086 Quincy, IL:
Non-SMSA Counties 3.1
IL Adams; IL Brown; IL Pike; MO Lewis; MO Marlon; MO Pike; MO Rails.

087 Peoria, IL:
SMSA Counties
1040 Bloomington - Normal, IL 2.5
IL McLean.
8120 Peoria, IL 4.4
IL Peoria; IL Tazewell; IL Woodford.
Non-SMSA Counties 3.3
IL Fulton; IL Knox; IL McDonough; IL Marshall; IL Mason; IL Schuyler;
IL Stark; IL Warren.
088 Rockford, IL:
SMSA Counties:
6880 Rockford, IL 6.3
IL Boone; IL Winnegago.
3620 Janesville - Beloit WI 3.1
WI Rock
Non-SMSA Counties 4.6
IL Lee; IL Ogle; IL Stephenson.

Wisconsin:

089 Milwaukee, WI:
SMSA Counties:
5080 Milwaukee, WI 8.0
WI Milwaukee; WI Ozaukee; WI Washington; WI Waukesha.
6600 Racine, WI 8.4
WI Racine.
Non-SMSA Counties 7.0
WI Dodge; WI Jefferson; WI Sheboygan; WI Walworth.
090 Madison, WI:
SMSA Counties:
4720 Madison, WI 2.2
WI Dane.
Non-SMSA Counties 1.7
WI Adams; WI Columbia; WI Green; WI Iowa; WI Marquette; WI Richland; WI Sauk.
091 La Crosse, WI:
SMSA Counties:
3870 LaCrosse. WI 0.9
Non-SMSA Counties 0.6
MN Houston; MN Winona; WI Buffalo; WI Jackson; WI Juneau; WI Monroe;
WI Trempealeau; WI Vernon.
092 Eau Claire, WI:
SMSA Counties:
2290 Eau Claire, WI 0.5
WI Chippewa; WI Eau Claire.
Non-SMSA Counties 0.6
WI Barron; WI Dunn; WI Pepin; WI Rusk; WI Sawyer; WI Washburn.
093 Wausau, WI:
Non-SMSA Counties 0.6
WI Clark; WI Langlade; WI Lincoln; WI Marathon; WI Oneida; WI Portage;
WI Price; WI Taylor; WI Vilas; WI Wood.
094 Appleton - Green Bay - Oshkosh, WI:
SMSA Counties:
0460 Appleton-Oshkosh, WI 0.9
WI Calumet; WI Outaramie; WI Winnebago.
3080 Green Bay, WI 1.3
WI Brown.

Non-SMSA Counties 1.0
MI Alger; MI Baraga; MI Delta; MI Dickinson; MI Houghton; MI Iron;
MI Keweenaw; MI Marquette; MI Menominee; MI Schoolcraft; WI Door;
WI Florence; WI Fond Du Lac; WI Forest WI Green Lake; WI Kewaunea;
WI Manitowoc; WI Marinette; WI Menominee; WI Oconto; WI Shawano;
WI Waupaca; Waushara.

095 Duluth, MN:
SMSA Counties:
2240 Duluth - Superior, MN-WI 1.0
MN St Louis; WI Douglas.
Non-SMSA Counties 1.2
MI Gogebic; MI Ontonagon; MN Carlton; MN Cook; MN Itasca; MN Koochiching;
MN Lake; WI Ashland; W! Bayfield; WI Iron.

Minnesota:

096 Minneapolis-St. Paul, MN:
SMSA Counties:
5120 Minneapolis-St. Paul, MN-WI 2.9
MN Anoka; MN Carver; MN Chisago; MN Dakota; MN Hennepin; MN Ramsey;
MN Scott; MN Washington; MN Wright; MN St. Croix.
6980 St. Cloud, MN 0.5
MN Benton; MN Sherburne; MN Stearns.
Non-SMSA Counties 2.2
MN Aitkin; MN Big Stone; MN Blue Earth; MN Brown; MN Cass; MN Chippewa;
MN Crow Wing; MN Douglas; MN Faribault; MN Goodhue; MN Grant; MN Isanti;
MN Kanabec; MN Kandiyohi; MN Lac Qui Parle; MN Le Sueur; MN McLeod;
MN Martin; MN Meeker; MN Mille Lacs; MN Mornson; MN Nicollet; MN Pine;
MN Pope; MN Renville; MN Rice; MN Sibley; MN Stevens; MN Swift; MN Todd;
MN Traverse; MN Wadena; MN Waseca; MN Watonwan; MN Yellow Medicine;
WI Burnett; WI Pierce; WI Polk.

097 Rochester, MN:
SMSA Counties:
6820 Rochester, MN 1.4
MN Olmsted.
Non-SMSA Counties 0.9
MN Dodge; MN Fillmore; MN Freeborn; MN Mower; MN Steele; MN Wabasha.

Iowa:

098 Dubuque, IA:
SMSA Counties:
2200 Dubuque, IA 0.6
IA Dubuque
Non-SMSA Counties 0.5
IL Jo Daviess; IA Allamakee; IA Clayton; IA Delaware, IA Jackson;
IA Winneshiek; WI Crawford; WI Grant; WI Lafayette.

099 Davenport-Rock Island-Moline, IA-IL:
SMSA Counties:
1960 Davenport-Rock Island-Moline, IA-IL 4.6
IL Henry; IL Rock Island; IA Scott.
Non-SMSA Counties 3.4
IL Carroll; IL Handcock; IL Henderson; IL Mercer; IL Whiteside; IA Clinton;
IA Des Moines; IA Henry; IA Lee; IA Louisa; IA Muscatine; MO Clark.

100 Cedar Rapids, IA:
SMSA Counties:
1360 Cedar Rapids, IA 1.7
IA Linn.
Non-SMSA Counties 1.5

IA Benton; IA Cedar; IA Iowa; IA Johnson; IA Jones; IA Washington.

101 Waterloo, IA:

SMSA Counties:

8920 Waterloo-Cedar Falls, IA 4.7

IA Black Hawk.

Non-SMSA Counties 2.0

IA Bremer; IA Buchanan; IA Butler; IA Cerro Gordo; IA Chickasaw; IA Fayette; IA Floyd; IA Franklin; IA Grundv; IA Hancock; IA Hardin; IA Howard; IA Mitchell; IA Winnegago; IA Worth.

102 Fort Dodge, IA:

Non-SMSA Counties 0.4

IA Bueno Vista; IA Calhoun; IA Carroll; IA Clay; IA Dickinson; IA Emmet; IA Greene; IA Hamilton; IA Humboldt; IA Kossuth; IA Palo Alto; IA Pocahontas; IA Sac; IA Webster; IA Wright.

103 Sioux City, IA:

SMSA Counties:

7720 Sioux City, IA-NE 1.9

IA Woodbury; NE Dakota.

Non-SMSA Counties 1.2

IA Cherokee, IA Crawford; IA Ida; IA Monona; IA O'Brien; IA Plymouth; IA. Sioux; NE Antelope; NE Cedar; NE Cuminq; NE Dixon; NE Knox; NE Madison; NE Pierce; NE Stanton; NE Thurston; NE Wayne; SD Bon Homme; SD Clay; SD Union; SD Yankton.

104 Des Moines, IA:

SMSA Counties:

2120 Des Moines, IA 4.5

IA Polk; IA Warren.

Non-SMSA Counties 2.4

IA Adair; IA Appanoose; IA Boone; IA Clarke; IA Dallas; IA Davis; IA Decatur; IA Guthrie; IA Jasper; IA Jefferson; IA Keokuk; IA Lucas; IA Madison; IA Mahaska; IA Marion; IA Marshall; IA Monroe; IA Poweshiek; IA Ringgold; IA Story; IA Tama; IA Union; IA Van Buren; IA Wapello; IA Wayne.

Missouri:

105 Kansas City, MO:

SMSA Counties:

3760 Kansas City, MO-KS 12.7

KS Johnson; KS Wayandotte; MO Cass; MO Clay; MO Jackson; MO Platte; MO Ray.

4150 Lawrence, KS 7.2

7000 St Joseph. MO 3.2

MO Andrew; MO Buchanan.

Non-SMSA Counties 10.0

KS Anderson; KS Atchison; KS Brown; KS Doniphan; KS Franklin; KS Leavenworth; KS Linn; KS Miami; MO Atchison; MO Bates; MO Benton; MO Caldwell; MO Caroll; MO Clinton; MO Daviess; MO Dekalb; MO Gentry; MO Grundy; MO Harrison; MO Henry; MO Holt; MO Johnson; MO Lafayette; MO Livingston; MO Mercer; MO Nodaway; MO Pettis; MO Saline; MO Worth.

106 Columbia, MO:

SMSA Counties:

1740 Columbia, MO; MO Boone 6.3

Non-SMSA Counties 4.0

MO Adair; MO Audrain; MO Callaway; MO Camden; MO Chariton; MO Cole; MO Cooper; MO Howard; MO Knox; MO Linn;. MO Macon; MO Miller; MO Moniteau; MO Monroe; MO Morgan; MO Osage; MO Putnam; MO Randolph; MO Schuyler; MO Scotland; MO Shelby; MO Sullivan.

107 St. Louis, MO:
SMSA Counties:
7040 St. Louis, MO-IL 14.7
IL Clinton; IL Madison; IL Monroe; IL St. Clair; MO Franklin; MO Jefferson; MO St. Charles; MO St. Louis; MO St. Louis City.
Non-SMSA Counties 11.4
IL Alexander IL Bond; IL Calhoun; IL Clay; IL Effingharn; IL Fayette; IL Franklin; IL Greene; IL Jackson; IL Jasper; IL Jefferson; IL Jersey; IL Johnson; IL Macoupin; IL Marion; IL Montgomery; IL Perry; IL Pulaski; IL Randolph; IL Richland; IL Union; IL Washington; IL Wayne; IL Williamson; MO Bollinger; MO Butler; MO Cape Girardeau; MO Carter; MO Crawford; MO Dent; MO Gasconade; MO Iron; MO Lincoln; MO Madison; MO Maries; Mississippi; MO Montgomery; MO Perry; MO Phelps; MO Reynolds; MO Ripley; MO St. Francis; MO Ste. Genevieve; MO Scott; MO Stoddard; MO Warren; MO Washington; MO Wayne.
108 Springfield, MO:
SMSA Counties:
7920 Springfield, MO 2.0
MO Christian; MO Greene.
Non-SMSA Counties 2.3
KS Allen; KS Bourbon; KS Cherokee; KS Crawford; KS Labette; KS Montgomery; KS Neosho; KS Wilson; KS Woodson; MO Barry; MO Barton; MO Cedar; MO Dade; MO Dallas;.MO Douglas; MO Hickory; MO Howell; MO Jasper; MO Laclede; MO Lawrence; MO McDonald; MO Newton; MO Oregon; MO Ozark; MO Polk; MO Pulaski; MO St. Clair; MO Shannon; MO Stone; MO Taney; MO Texas; MO Vernon; MO Webster; MO Wright; OK Craig; OK Ottawa.

Arkansas:

109 Fayetteville, AR:
Non-SMSA Counties 3.3
AR Baxter; AR Benton; AR Boone; AR Carroll; AR Madison; AR Marion; AR Newton; AR Searcy; AR Washington; OK Adair; OK Delaware.
110 Fort Smith, AR:
SMSA Counties:
2720 Fort Smith, AR-OK 5.6
AR Crawford; AR Sebastian; OK Le Flore; OK Sequoyah.
Non-SMSA Counties 6.6
AR Franklin; AR Logan; AR Polk; AR Scott; OK Choctaw; OK Haskell; OK Latimer; OK McCurtain; OK Pittsburg; OK Pushmataha.
111 Little Rock-North Little Rock, AR:
SMSA Counties:
4400 Little Rock-North Little Rock, AR 15.7
AR Pulaski; AR Saline.
6240 Pine Bluff, AR 31.2
AR Jefferson
Non-SMSA Counties 16.4
AR Arkansas; AR Ashley; AR Bradley; AR Calhoun; AR Chicott; AR Clark; AR Calhoun; AR Cleveland; AR Conway; AR Dallas; AR Desha; AR Drew; AR Faulkner; AR Fulton: AR Garland; AR Grant; AR Hot Springs; AR Independence; AR Izard; AR Jackson; AR Johnson; AR Lincoln; AR Lonoke; AR Monroe; AR Montgomery; AR Ouachita; AR Perry, AR Pope; AR Prairie; AR Sharp; AR Stone; AR Union; AR Van Buren; AR While; AR Woodruft; AR Yell.

Mississippi:

112 Jackson, MS:
SMSA Counties;
3560 Jackson, MS _____ 30.3
MS Hinds; MS Rankin.
Non-SMSA Counties _____ 32.0
MS Attala; MS Choctaw; MS Choctaw; MS Clarke; MS Copiah;
MS Covington; MS Franklin; MS Holmes: MS Humphreys; MS Issaquena;
MS Jasper; MS Jefferson; MS Jefferson Davis; MS Jones; MS Kemper;
MS Lauderdale; MS Lawrence; MS Leake; MS Lincoln; MS Lowndes;
MS Madison; MS Neshoba; MS Newton; MS Noxubee; MS Oktibbeha;
MS Scott; MS Sharkey; MS Simpson; MS Smith; MS Warren; MS Wayne;
MS Winston; MS Yazoo.

Louisiana:

113 New Orleans, LA:
SMSA Counties
0920 Biloxi-Gulfport, MS _____ 19.2
MS Hancock; MS Harrison; MS Stone.
5560 New Orleans, LA _____ 31.0
LA Jefferson; LA Orleans; LA St. Bernard; LA St. Tammany.
Non-SMSA Counties _____ 27.7
LA Assumption; LA Lafourche; LA Plaquemines; LA St. Charles; LA St. James;
LA St. John The Baptist; LA Tangipahoa; LA Terrebonne; LA Washington; MS Forrest;
MS Lamar; MS Marion; MS Pearl River; MS Perry; MS Pike; MS Walthall.
114 Baton Rouge, LA:
SMSA Counties:
0760 Baton Rouge, LA _____ 26.1
LA Ascension; LA East Baton Rouge; LA Livingston; LA West Baton Rouge.
Non-SMSA Counties _____ 30.4
LA Concordia; LA E. Feliciana; LA Iberville; LA Pointe Coupee; LA St. Helena;
LA West Feliciana; MS Adams; MS Amite; MS Wilkinson.
115 Lafayette, LA:
SMSA Counties:
3880 Lafayette, LA _____ 20.6
LA Lafayette.
Non-SMSA Counties _____ 24.1.
LA Acadia; LA Evangeline; LA Iberia; LA St. Landry; LA St. Martin;
LA St. Mary; LA Vermillion.
116 Lake Charles, LA:
SMSA Counties:
3960 Lake Charles, LA _____ 19.3
LA Calcasieu.
Non-SMSA Counties _____ 17.8
LA Allen; LA Beauregard; LA Cameron; LA Jefferson Davis LA Vernon.
117 Shreveport, LA:
SMSA Counties:
0220 Alexandria, LA _____ 25.7
LA Grant; LA Rapides.
7680 Shreveport, LA _____ 29.3
LA Bossier; LA Caddo; LA Webster.
Non-SMSA Counties _____ 29.3
LA Avoyelles; LA Bienville; LA Claiborne; LA De Soto; LA Natchitoches;
LA Red River; LA Sabine; LA Winn.

118 Monroe, LA:
SMSA Counties:
5200 Monroe, LA 22.8
LA Ouachita.
Non-SMSA Counties 27.9
LA Caldwell; LA Catahoula; LA East Carroll; LA Franklin; LA Jackson; LA La Salle; LA Lincoln; LA Madison; LA Morehouse; LA Richland; LA Tensas; LA Union; LA West Carroll.

Texas:

119 Texarkana, TX:
SMSA Counties:
8360 Texarkana, TX-Texarkana, AR 19.7
AR Little River; AR Miller; TX Bowie.
Non-SMSA Counties 20.2
AR Columbia; AR Hempstead; AR Howard; AR Lafayette; AR Nevada; AR Pike; AR Sevier; TX Camp; TX Cass; TX Lamar; TX Morris; TX Red River; TX Titus.
120 Tyler-Longview, TX:
SMSA Counties:
4420 Longview, TX 22.8
TX Gregg; TX Harrison.
8640 Tyler, TX 23.5
TX Smith.
Non-SMSA Counties 22.5
TX Anderson; TX Angelina; TX Cherokee; TX Henderson; TX Houston; TX Marion; TX Nacogdoches; TX Panola; TX Rusk; TX San Augustine; TX Shelby; TX Upshur; TX Wood.
121 Beaumont-Port Arthur, TX:
SMSA Counties:
0840 Beaumont-Port Arthur Orange, TX 22.6
TX Hardin; TX Jefferson; TX Orange.
Non-SMSA Counties 22.6
TX Jasper; TX Newton; TX Sabine; TX Tyler.
122 Houston, TX:
SMSA Counties
1260 Bryan-College Station, TX 23.7
TX Brazos.
2920 Galveston-Texas City, TX 28.9
TX Galveston.
3360 Houston, TX 27.3
TX Brazona; TX Fort Bend; TX Harris; TX Liberty, TX Montgomery, TX Waller.
Non-SMSA Counties 27.4
TX Austin; TX Burleson; TX Calhoun; TX Chambers; TX Colorado; TX De Witt; TX Fayette; TX Goliad; TX Grimes; TX Jackson; TX Lavaca; TX Leon; TX Madison; TX Matagorda; TX Polk; TX Robertson; TX San Jacinto; TX Trinity; TX Victoria; TX Walker; TX Washington; TX Wharton.
123 Austin, TX:
SMSA Counties:
0640 Austin, TX 24.1
TX Hays; TX Travis; TX Williamson.
Non-SMSA Counties 24.2
TX Bastrop; TX Blanco; TX Burnet; TX Caldwell; TX Lee; TX Llano.
124 Waco-Killeen-Temple, TX:
SMSA Counties:
3810 Killeen-Temple, TX. 16.4
TX Belt TX Coryall.
8800 Waco, TX 20.7
TX McLermarx

Non-SMSA Counties _____ 18.6
TX Bosque; TX Falls; TX Freestone; TX Hamilton; TX Hill; TX Lampasas;
TX Limestone; TX Milam; TX Mills.

125 Dallas-Fort Worth, TX:
SMSA Counties
1920 Dallas-Fort Worth, TX _____ 18.2
TX Collier; TX Dallas; TX Denton; TX Ellis; TX Hood; TX Johnson; TX Kaufman;
TX Parker; TX Rockwall; TX Tarrant; TX Wise.
7640 Sherman-Denison, TX _____ 9.4
TX Grayson.
Non-SMSA Counties _____ 17.2
OK Bryan; TX Cooke; TX Delta; TX Erath; TX Fannin; TX Franklin; TX Hopkins; TX Hunt;
TX Jack; TX Montague; TX Navarro; TX Palo Pinto; TX Rains; TX Sommerveil;
TX Van Zandt.

126 Wichita Falls, TX:
SMSA Counties:
9080 Wichita Falls, TX: _____ 12.4
TX Clay; TX Wichita.
Non-SMSA Counties _____ 11.0
TX Archer; TX Baylor; TX Cottle; TX Foard; TX Hardeman; TX Wilbarger; TX Young.

127 Abilene, TX:
SMSA Counties:
0040 Abilene, TX _____ 11.6
TX Callahan; TX Jones; TX Taylor.
Non-SMSA Counties _____ 10.9
TX Brown; TX Coleman; TX; Comanche; TX Eastland; TX Fisher; TX Haskell;
TX Kent; TX Knox; TX Mitchell; TX Nolan; TX Scurry; TX Shackelford; TX Stephens;
TX Stonewall; TX Throckmorton.

128 San Angelo, TX:
SMSA Counties:
7200 San Angelo, TX _____ 19.2
TX Tom Green.
Non-SMSA Counties_____ 20.0
TX Coke; TX Concha; TX Crockett; TX Irion; TX Kimble; TX McCulloch; TX Mason;
TX Menard; TX Reagan; TX Runnels; TX San Saba; TX Schleicher; TX Sterling;
TX Sutton, TX Terrell.

129 San Antonio, TX:
SMSA Counties:
4080 Laredo _____ 87.3
TX Webb.
7240 San Antonio, TX _____ 47.8
TX Bexar; TX Comal; TX Guadalupe.
Non-SMSA Counties _____ 49.4
TX Atascosa; TX Bandera; TX Dimmit; TX Edwards; TX Frio; TX Gillespie;
TX Gonzales; TX Jim Hogg; TX Karnes; TX Kendall; TX Kerr; TX Kinney;
TX La Salle; TX McMullen; TX Maverick; TX Medina; TX Real; TX Uvalde;
TX Val Verde; TX Wilson; TX Zapata; TX Zavala.

130 Corpus Christi, TX:
SMSA Counties:
1880 Corpus Christi, TX _____ 41.7
TX Nueces; TX San Patricio.
Non-SMSA Counties _____ 44.2
TX Aransas; TX Bee; TX Brooks; TX Duval; TX Jim Wells; TX Kenady; TX Kyberg;
TX Live Oak; TX Refugio.

131 Brownsville-McAllen-Harlingen, TX:
SMSA Counties:
1240 Brownsville-Harlingen-San Benito, TX _____ 71.0
TX Cameron.
4880 McAllen-Pharr-Edinburg, TX _____ 72.8

TX Hidalgo.
Non-SMSA Counties _____ 72.9
TX Starr; TX Willacy.
132 Odessa-Midland, TX:
SMSA Counties:
5040 Midland, TX _____ 19.1
TX Midland.
5800 Odessa, TX _____ 15.1
TX Ector.
Non-SMSA Counties _____ 18.9
TX Andrews; TX Crane; TX Glasscock; TX Howard; TX Loving; TX Martin;
TX Pecos; TX Reeves; TX Upton; TX Ward; TX Winkler.
133 El Paso, TX:
SMSA Counties:
2320 El Paso, TX _____ 57.8
TX El Paso.
Non-SMSA Counties _____ 49.0
NM Chaves; NM Dona Ana; NM Eddy; NM Grant; NM Hidalgo; NM Luna; NM Otero;
NM Sierra, TX Brewster; TX Culberson; TX Hudspeth; TX Jeff Davis; TX Presidio.
134 Lubbock, TX:
SMSA Counties:
4600 Lubbock _____ 19.6
TX Lubbock.
Non-SMSA _____ 19.5
NM Lea; NM Roosevelt ; TX Bailey; TX Borden; TX Cochran; TX Crosby;
TX Dawson; TX Dickens; TX Floyd; TX Gaines; TX Garza; TX Hale; TX Hockley;
TX King; TX Lamb; TX Lynn; TX Motley; TX Terry; TX Yoakum.
135 Amarillo, TX:
SMSA Counties:
0320 Amarillo, TX _____ 9.3
TX Potter; TX Randall.
Non-SMSA Counties _____ 11.0
NM Curry; NM Harding; NM Quay; NM Union; OK Beaver; OK Cimarron; OK Texas;
TX Arnstrong; TX Briscoe; TX Carson; TX Castro; TX Childress; TX Collingsworth; TX
Dallam; TX Deaf Srnith; TX Donley; TX Gray; TX Hall; TX Hansford; TX Hartley; TX
Hemphill; TX Hutchinson; TX Lipscomb; TX Moore; TX Ochitree; TX Oldham; TX
Parmer; TX Roberts; TX Sherman; TX Swisher; TX Wheeler.

Oklahoma:

136 Lawton, OK:
SMSA Counties:
4200 Lawton, OK _____ 14.8
OK Comanche.
Non-SMSA Counties _____ 10.8
OK Cotton; OK Green; OK. Harmon; OK Jackson; OK Jefferson; OK Kiowa;
OK Stephens; OK Tillman.
137 Oklahoma City, OK:
SMSA Counties
5880 Oklahoma City, OK _____ 10.2
OK Canadian; OK Cleveland; OK McClain; OK Oklahoma; OK Pottawatomie.
Non-SMSA Counties _____ 9.0
OK Alfalfa; OK Atoka; OK Beckham; OK Blaine; OK Caddo; OK Carter; OK Coat;
OK Custer; OK Dewey; OK Ellis; OK Garfield; OK Garvin; OK Grady; OK Grant;
OK Harper; OK Hughes; OK Johnston; OK Kingfisher; OK Lincoln; OK Logan; OK
Love; OK Major; OK Marshall; OK Murray, OK Okfuskee; OK Pontotoc; OK Roger
Mills; OK Seminole; OK Washita; OK Woods; Ok Woodward.

138 Tulsa, OK:
SMSA Counties:
8560 Tulsa, OK _____ 10.2
OK Creek; OK Mayes; OK Osage; OK Rogers; OK Tulsa; OK Wagoner.
Non-SMSA Counties _____ 10.0
OK Cherokee; OK Key; OK McIntosh; OK Muskogee; OK Noble; OK Nowata; OK Okmulgee; OK Pawnee; OK Payne; OK Washington.

Kansas:

139 Wichita, KS:
SMSA Counties:
9040 Wichita, KS _____ 7.9
KS Butler; KS Sedgwick.
Non-SMSA Counties _____ 5.7
KS Barber; KS Barton; KS Chase; KS Chautauqua; KS Clark; KS Comanche. KS Cowley; KS Edwards; KS Elk; KS Finney; KS Ford; KS Grant; KS Gray; KS Greeley; KS Greenwood; KS Hamilton; KS Harper; KS Harvey; KS Haskell; KS Hodgeman; KS Kearny; KS Kingman; KS Kiowa; KS Lane; KS McPherson; KS Marion; KS Meade; KS Morton; KS Ness; KS Pawnee; KS Pratt; KS Reno; KS Rice; KS Rush; KS Scott; KS Seward; KS Stafford; KS Stanton; KS Stevens; KS Sumner, KS Wichita.
140 Salina, KS:
Non-SMSA Counties _____ 1.5
KS Cheyenne; KS Cloud; KS Decatur; KS Dickinson; KS Ellis; KS Ellsworth; KS Gove; KS Graham; KS Jewell; KS Lincoln; KS Logan; KS Mitchell; KS Norton; KS Osborne; KS Ottawa; KS Phillips; KS Rawlins; KS Republic; KS Rooks; KS Russell; KS Saline; KS Sheridan; KS Sherman; KS Smith; KS Thomas; KS Trego; KS Wallace.
141 Topeka, KS:
SMSA Counties:
8440 Topeka, KS _____ 9.0
KS Jefferson; KS Osage; KS Shawnee.
Non-SMSA Counties _____ 8.5
KS Clay; Coffey; KS Geary; KS Jackson; KS Lyon; KS Marshall; KS Morris; KS Nemaha; KS Pottawatomie, KS Riley; KS Wabaunsee; KS Washington.

Nebraska:

142 Lincoln, NE:
SMSA Counties:
4360 Lincoln, NE _____ 2.8
NE Lancaster.
Non SMSA Counties _____ 1.9
NE Butler; NE Fillmore; NE Gage; NE Jefferson; NE Johnson; NE Nemaha; NE Otoe; NE Pawnee; NE Polk; NE Richardson; NE Saline, NE Seward; NE Thayer; NE York.
143 Omaha, NE:
SMSA CountieS:
5920 Omaha, NE-IA _____ 7.6
IA Pottawattamie; NE Douglas; NE Sarpy.
Non-SMSA _____ 6.3
IA Adams; IA Audubon; IA Cass; IA Fremont; IA Harrison; LA Mills; IA Montgomery; IA Page; IA Shelby; IA Taylor; NE Burt; NE Cass; NE Colfax; NE Dodge; NE Platte; NE Saunders; NE Washington.
144 Grand Island, NE:
Non SMSA Counties _____ 1.4
NE Adams; NE Aurther; NE Blaine; NE Boyd; NE Brown; NE Buffalo; NE Chase; NE Cherry; NE Clay; NE Custer; NE Dawson; NE Dundy; NE Franklin; NE Frontier; NE Fumas; NE Garfield; NE Gosper; NE Grant; NE Greeley, NE Hall; NE Hamilton;

NE Harlan; NE Hayes; NE Hitchcock; NE Holt; NE Hooker; NE Howard; NE Kearney; NE Keith; NE Keya Paha; NE Lincoln; NE Logan; NE Loup; NE McPherson; NE Merrick; NE Nance; NE Nuckolls; NE Perkins; NE Phelps; NE Red Willow; NE Rock; NE Sherman; NE Thomas; NE Valley; NE Webster; NE Wheeler.

145 Scottsbluff, NE:

Non-SMSA Counties _____ 5.3

NE Banner; NE Box Butt; NE Cheyenne; NE Dawes; NE Deuel; NE Garden; NE Kimball; NE Morrill; NE Scotts Buff; NE Sheridan; NE Sioux; NE Goshen.

South Dakota:

146 Rapid City, SD:

SMSA Counties:

6660 Rapid City, SD _____ 3.4

SD Pennington; SD Meade.

Non-SMSA Counties _____ 7.9

SD Bennett; SD Buffalo; SD Butte; SD Campbell; SD Corson; SD Custer; SD Dewey (Armstrong); SD Fall River; SD Haakon; SD Harding; SD Hughes; SD Hyde; SD Jackson; SD Jones; SD Lawrence; SD Lyman; SD Mellette; SD Perkins; SD Potter; SD Shannon (Washington); SD Stanley; SD Sully; SD Todd; SD Tripp; SD Walworth; SD Washabaugh; SD Ziebach; WY Crook; WY Niobrara; WY Weston.

147 Sioux Falls, SD:

SMSA Counties:

7760 Sioux Falls, SD _____ 1.2

SD Minnehaha.

Non-SMSA Counties _____ 0.8

IA Lyon; IA Osceola; MN Cottonwood; MN Jackson;. MN Lincoln; MN Lyon; MN Murray, MN Nobles; MN Pipestone; MN Redwood; MN Rock; SD Aurora; SD Beadle; SD Brookings; SD Brule; SD Charles Mix; SD Davison; SD Douglas; SD Gregory; SD Hand; SD Hanson; SD Hutchinson; SD Jerauld; SD Kingsbury; SD Lake; SD Lincoln; SD McCook, SD Miner, SD Moody, SD Sanborn; SD Turner.

148 Aberdeen, SD:

Non-SMSA Counties _____ 1.3

SD Brown; SD Clark; SD Codington; SD Day; SD Deuel; SD Edmunds; SD Faulk; SD Grant; SD Hamlin; SD McPherson; SD Marshall; SD Roberts; SD Spink.

North Dakota:

149 Fargo-Moorhead, ND-MN:

Non-SMSA Counties _____ 0.7

MN Becker MN Clay; MN Cass; MN Wilkin; ND Barnes; ND Dickey; ND Eddy; ND Foster; ND Griggs; ND La Moure; ND Logan; ND McIntosh; ND Ransom; ND Richland; ND Sargent; ND Steele; ND Stutsman; ND Traill.

150 Grand Forks, ND:

SMSA Counties:

2985 Grand Forks, ND-MN _____ 1.2

MN Polk; ND Grand Forks.

Non-SMSA Counties _____ 2.0

MN Beltrami; MN Clearwater MN Hubbard. MN Kittson; MN Lake of the Woods; MN Mahnomen; MN Marshall; MN Norman; MN Pennington; MN Red Lake; MN Roseau; MN Benson; ND Cavalier; ND Nelson; ND Pembina; ND Ramsey; ND Towner; ND Walsh.

151 Bismarck, ND:

SMSA Counties:

1010 Bismarck, ND _____ 0.4

ND Burleigh; ND Morton.

Non-SMSA Counties 1.3
ND Adams; ND Billings; ND Bowman; ND Dunn; ND Emmons; ND Golden Valley; ND Grant; ND Hettinger; ND Kidder; ND Mercer; ND Oliver; ND Sheridan; ND Sioux; ND Slope; ND Stark; ND Wells.

152 Minot, ND:
Non-SMSA Counties 4.4
MT Daniels; MT Richland; MT Roosevelt; MT Sheridan; ND Bottineau; ND Burke; ND Divide; ND McHenry; ND McKenzie; ND McLean; ND Mountrail; ND Pierce; ND Renville; ND Rolette; ND Ward; ND Williams.

Montana:

153 Great Falls, MT:
SMSA Counties.
3040 Great Falls, MT 3.2
MT Cascade.
Non-SMSA Counties 4.1
MT Blaine; MT Broadwater; MT Chouteau; MT Fergus; MT Glacier; MT Hill; MT Jefferson; MT Judith Basin; MT Lewis and Clark; MT Liberty; MT Meagher; MT Petroleum; MT Phillips; MT Pondera; MT Teton; MT Toole; MT Valley; MT Wheatland.

154 Missoula, MT:
Non-SMSA Counties 2.7
MT Beaverhead; MT Deer Lodge; MT Flathead; MT Granite; MT Lincoln; MT Madison; MT Mineral; MT Missoula; MT Powell; MT Ravalli; MT Sanders; MT Silver Bow; MT Lake.

155 Billings, MT:
SMSA Counties:
0880 Billings, MT 3.3
MT Yellowstone.
Non-SMSA Counties 3.3
MT Big Horn; MT Carbon; MT Carter; MT Custer; MT Dawson; MT Fallon; MT Gallatin; MT Garfield; MT Golden Valley; MT McCone; MT Musselshell; MT Park; MT Powder River; MT Prairie; UT Rosebud; MT Stillwater, MT Sweet Grass; MT Treasure; MT Wilbaux; MT Yellowstone Nat'l Park; WY Big Horn; WY Hot Springs; WY Park; WY Sheridan; WY Washakie.

Wyoming:

156 Cheyenne-Casper, WY:
Non-SMSA Counties 7.5
CO Jackson; WY Albany; WY Campbell; WY Carbon; WY Converse; WY Fremont WY Johnson; WY Laramie; WY Natrona, WY Platte.

Colorado:

157 Denver, CO:
SMSA Counties:
2080 Denver-Boulder, CO 13.8
CO Adams; CO Arapahoe; C0 Boulder. CO Denver; CO Douglas; CO Gilpin; CO Jefferson.
2670 Fort Collins, CO 6.9
CO Larimer.
3060 Greeley, CO 13.1
CO Weld.

Non-SMSA Counties 12.8
CO Cheyenne; CO Clear Creek; CO Elbert CO Grand; CO Kit Carson;
CO Logan; CO Morgan; CO Park; CO Phillips; :CO Sedgwick;
CO Summit; CO Washington; CO Yuma.

158 Colorado Springs-Pueblo, CO:
SMSA Counties:
1720 Colorado Springs, CO 10.9
CO EL Paso; CO Teller.
6560 Pueblo, CO 27.5
CO Pueblo.
Non-SMSA Counties 19.0
CO Alamosa; CO Baca; CO Bent; CO Chaffee; CO Conejos; CO Costilla;
CO Crowley; CO Custer; CO Fremont; CO Huerfano; CO Kiowa; CO Lake;
CO Las Animas; CO Lincoln; CO Mineral; CO Otero; CO Prowers; CO Rio Grande;
CO Saguache.

159 Grand Junction. CO:
Non-SMSA Counties 10.2
CO Archuleta; CO Delta; CO Dolores; CO Eagle; CO Garfield; CO Gunnison;
CO Hinsdale; CO La Plata, CO Mesa; CO Moffat; CO Montezuma; CO Montrose;
CO Ouray; CO Pitkin; CO Rio Blanco; CO Routt; CO San Juan; CO San Miguel;
UT Grand; UT San Juan.

New Mexico:

160 Albuquerque, NM:
SMSA Counties.
0200 Albuquerque, NM 38.3
NM Bernalillo; NM Sandoval.
Non-SMSA Counties 45.9
NM Citron. NM Colfax; NM De Baca; NM Guadalupe; NM San Juan; NM San Miguel;
NM Santa Fe; NM Socorro; NM Taos; NM Torrance; NM Valencia.

Arizona:

161 Tucson, AZ:
SMSA Counties:
8520 Tucson, AZ 24.1
AZ Pima.
Non-SMSA Counties 27.0
AZ Cochise; AZ Graham; AZ Greenlee; AZ Santa Cruz.

162 Phoenix, AZ:
SMSA Counties:
6200 Phoenix, AZ 15.8
AZ Maricopa.
Non-SMSA Counties 19.6
AZ Apache; AZ Coconino; AZ Gila; AZ Mohave; AZ Navajo; AZ Pinal;
AZ Yavapai; AZ Yuma.

Nevada:

163 Las Vegas, NV:
SMSA Counties:
4120 Las Vegas, NV 13.9
NV Clark.

Non-SMSA Counties 12.6
NV Esmeralda; NV Lincoln; NV Nye;UT Beaver; UT Garfield; UT Iron;
UT Kane; UT Washington.
164 Reno, NV:
SMSA Counties:
6720 Reno, NV 8.2
NV Washoe.
Non-SMSA Counties 9.2
NV Churchill; NV Douglas; NV Elko;NV Eureka; NV Humboldt; NV Lander;
NV Lyon; NV Mineral; NV Pershing; NV Storey; NV White Pine; NV Carson City

Utah:

165 Salt Lake City, Ogden, UT:
SMSA Counties
6520 Provo-Orem, UT 2.4
UT Utah.
7160 Salt Lake City-Ogden, UT 6.0
UT Davis; UT Salt Lake; UT Toole; UT Weber.
Non-SMSA Counties 5.1
ID Bear Lake; ID Franklin; ID Oneida; UT Box Elder; UT Cache; UT Carbon;
UT Daggett; UT Duchesne; UT Emery; UT Juab; UT Millard; UT Morgan; UT Piute;
UT Rich; UT Sanpete; UT Sevier; UT Summit; UT Uintah -UT Wasatch; UT Wayne;
WY Lincoln; WY Sublette; WY Sweetwater; WY Uinta.

Idaho:

166 Pocatello-Idaho Falls, ID:
Non-SMSA Counties 4.0
ID Bannock; ID Bingham; ID Baline; ID Bonneville; ID Butte; ID Camas; ID Caribou;
ID Cassia; ID Clark; ID Custer; ID Fremont; ID Gooding; ID Jefferson; ID Jerome;
ID Lemini; ID Lincoln; ID Madison; ID Minidoka; ID Power; ID Teton; ID Twin Falls;
WY Teton.
167 Boise City, ID:
SMSA Counties:
1080 Boise City. ID 2.3
ID Ada.
Non-SMSA Counties 4.4
ID Adams; ID Boise; ID Canyon; ID Elmore; ID Gem; ID Owyhee; ID Payette;
ID Valley; ID Washington; OR Harney; OR Malheur.

Washington:

168 Spokane, WA:
SMSA Counties:
7840 Spokane, WA 2.8
WA Spokane.
Non-SMSA Counties 3.0
ID Benewah; ID Bonner; ID Boundary; ID Clearwater; ID Idaho; ID Kootena; ID Latah;
ID Lewis; ID Nez Perce; ID Shoshone; WA Adams; WA Asotin; WA Columbia; WA
Ferry; WA Garfield; WA Lincoln; WA Pend Orelle; WA Stevens; WA Whitman.
169 Richland, WA:
SMSA Counties:
6740 Richland-Kennewick, WA 5.4
WA Benton; WA FrankIln.
Non-SMSA Counties 3.8

OR Baker; OR Gilliam; OR Grant; OR Morrow; OR Umatilla; OR Union;
OR Wallowa; OR Wheeler; WA Walla Walla.

170 Yakima, WA:
SMSA Counties:
9260 Yakima, WA _____ 9.7
WA Yakima.
Non-SMSA Counties _____ 7.2
WA Chelan; WA Douglas; WA Grant; WA Kittitas; WA Okanogan.

171 Seattle, WA:
SMSA Counties:
7600 Seattle-Everett, WA _____ 7.2
WA King; WA Snohomish.
8200 Tacoma, WA _____ 6.2
WA Pierce.
Non-SMSA Counties _____ 6.2
WA Clallarn; WA Grays Harbor; WA Island; WA Jefferson; WA Kitsap; WA Lewis;
WA Mason; WA Pacific; WA San Juan; WA Skaqil; WA Thurston; WA Whatcom.

Oregon:

172 Portland, OR:
SMSA Counties:
6440 Portland, OR-WA _____ 4.5
OR Clackamas; OR Muitnomah; OR Washinton; WA Clark.
7080 Salem OR _____ 2.9
OR Marion; OR Polk.
Non-SMSA Counties: . . .
OR Benton; OR Clatsop; OR Columbia; OR Crook; OR Deschutes; OR Hood River;
OR Jefferson; OR Lincoln; OR Linn; OR Sherman; OR Tillammok; OR Wasco;
OR Yamhill; WA Cowlitz; WA Klickitat; WA Skamania; WA Wahkiakum.

173 Eugene, OR:
SMSA Counties:
2400 Eugene-Springfield, OR _____ 2.4
OR Lane.
Non-SMSA Counties _____ 2.4
OR Coos; OR Curry; OR Douglas; OR Jackson; OR Josephine; OR Klamath;
OR Lake

California:

174 Redding, CA:
Non-SMSA Counties _____ 6.8
CA Lassen; CA Modoc; CA Plumas; CA; Shasta; CA Siskiyou; CA Tehama.

175 Eureka, CA:
Non-SMSA Counties _____ 6.6
CA Del Norte; CA Humboldt; CA Trinity.

176 San Francisco-Oakland-San Jose, CA:
SMSA Counties:
7120 Salinas-Seaside-Monterey, CA _____ 28.9
CA Monterey.
7360 San Francisco-Oakland, CA _____ 25.8
CA Alameda; CA Contra Costa; CA Marin; San Francisco; CA San Mateo.
7400 San Jose, CA _____ 19.6
CA Santa Clara.
7485 Santa Cruz, CA _____ 14.9
CA Santa Cruz.
7500 Santa Rosa, CA _____ 9.1
CA Sonoma.-

8720 Vallejo-Fairfield-Napa, CA 17.1
CA Napa; CA Solano.
Non-SMSA Counties 23.2
CA Lake; CA Mendocino; CA San Benito.
177 Sacramento, CA:
SMSA Counties:
6920 Sacramento, CA 16.1
CA Placer; CA Sacramento; CA Yolo.
Non-SMSA Counties 14.3
CA Butte; CA Colusa; CA El Dorado; CA Glenn; CA Nevada; CA Sierra;
CA Sutter; CA Yuba.
178 Stockton-Modesto, CA:
SMSA Counties:-
5170 Modesto, CA 12.3
CA Stanislaus
8120 Stockton, CA 24.3
CA San Joaquin.
Non-SMSA Counties 19.8
CA Alpine; CA Amador; CA Calaveras; CA Mariposa; CA Merced, CA Tuolumne.
179 Fresno-Bakersfield, CA:
SMSA Counties:
0680 Bakersfield, CA 19.1
CA Kent
2840 Fresno, CA 26.1
CA Fresno
Non-SMSA Counties 23.6
CA Kings; CA Madera CA Tulare.
180 Los Angeles, CA:
SMSA Counties.
0360 Anaheim-Santa Ana-Garden Grove, CA 11.9
CA Orange.
4480 Los Angeles-Long Beach, CA 28.3
CA Los Angeles
6000 Oxnard-Simi Valley-Ventura, CA 21.5
CA Ventura
6780 Riverside-San Bernardino-Ontario, CA 19.0
CA Riverside; CA San Bernadino.
7480 Santa Barbara-Santa Maria-Lompoc, CA 19.7
CA Santa Barbara.
Non-SMSA Counties 24.6
CA Inyo; CA Mono; CA San Luis - Obispo.
181 San Diego, CA:
SMSA Counties
7320 San Diego, CA 16.9
CA San Diego.
Non-SMSA Counties 16.2
CA Imperial

Alaska:

182 Anchorage, AK:
SMSA Counties:
0380 Anchorage, AK 8.7
AK Anchorage Division.
Non-SMSA Counties 15.1
AK Aleutian Islands Division; AK Angoon Division; AK Barrow-North Slope Division; AK Bethel Division; AK Bristol Bay Borough; AK Bristol Bay Division; AK Cordova McCarthy Division; AK Fairbanks Division; AK Haines Division; AK Juneau Division;

AK Kenai-Cook Inlet Division; AK Ketchikan Division; AK Kobuk Division; AK Kodiak Division; AK Kwskokwim Division; AK Matansuska-Susitna Division; AK Nome Division; AK Outer Ketchikan Division; AK Prince of Wales Division; AK Seward Division; AK Sitka Division; AK Skagaway-Yakutat Division; AK Southeast Fairbanks Division; AK Upper Yukon Division; AK Valdez-Citina-Whittier Division; AK Wade Hampton Division; AK Wrangell-Petersburg Division; AK Yukon-Koyukuk Division.

Hawaii:

183 Honolulu, HI:
SMSA Counties:
3320 Honolulu. HI _____ 69.1
HI Honolulu.
Non-SMSA Counties _____ 70.4
HI Hawaii; HI Kauai; HI Maui; HI Kalowao.

Back

FORM **CD-512**
(REV 12-04)

U.S. DEPARTMENT OF COMMERCE

CERTIFICATION REGARDING LOBBYING
LOWER TIER COVERED TRANSACTIONS

Applicants should review the instructions for certification included in the regulations before completing this form. Signature on this form provides for compliance with certification requirements under 15 CFR Part 28, "New Restrictions on Lobbying."

LOBBYING

As required by Section 1352, Title 31 of the U.S. Code, and implemented at 15 CFR Part 28, for persons entering into a grant, cooperative agreement or contract over $100,000 or a loan or loan guarantee over $150,000 as defined at 15 CFR Part 28, Sections 28.105 and 28.110, the applicant certifies that to the best of his or her knowledge and belief, that:

(1) No Federal appropriated funds have been paid or will be paid, by or on behalf of the undersigned, to any person for influencing or attempting to influence an officer or employee of any agency, a Member of Congress in connection with the awarding of any Federal contract, the making of any Federal grant, the making of any Federal loan, the entering into of any cooperative agreement, and the extension, continuation, renewal, amendment, or modification of any Federal contract, grant, loan, or cooperative agreement.

(2) If any funds other than Federal appropriated funds have been paid or will be paid to any person for influencing or attempting to influence an officer or employee of any agency, a Member of Congress, an officer or employee of Congress, or an employee of a member of Congress in connection with this Federal contract, grant, loan, or cooperative agreement, the undersigned shall complete and submit Standard Form-LLL, "Disclosure Form to Report Lobbying," in accordance with its instructions.

(3) The undersigned shall require that the language of this certification be included in the award documents for all subawards at all tiers (including subcontracts, subgrants, and contracts under grants, loans, and cooperative agreements) and that all subrecipients shall certify and disclose accordingly.

This certification is a material representation of fact upon which reliance was placed when this transaction was made or entered into. Submission of this certification is a prerequisite for making or entering into this transaction imposed by section 1352, title 31, U.S. Code. Any person who fails to file the required certification shall be subject to a civil penalty of not less than $10,000 and not more than $100,000 for each such failure occurring on or before October 23, 1996, and of not less than $11,000 and not more than $110,000 for each such failure occurring after October 23, 1996.

Statement for Loan Guarantees and Loan Insurance

The undersigned states, to the best of his or her knowledge and belief, that:

In any funds have been paid or will be paid to any person for influencing or attempting to influence an officer or employee of any agency, a Member of Congress, an officer or employee of Congress, or an employee of a Member of Congress in connection with this commitment providing for the United States to insure or guarantee a loan, the undersigned shall complete and submit Standard Form-LLL, ''Disclosure Form to Report Lobbying,'' in accordance with its instructions.

Submission of this statement is a prerequisite for making or entering into this transaction imposed by section 1352, title 31, U.S. Code. Any person who fails to file the required statement shall be subject to a civil penalty of not less than $10,000 and not more than $100,000 for each such failure occurring on or before October 23, 1996, and of not less than $11,000 and not more than $110,000 for each such failure occurring after October 23, 1996.

As the duly authorized representative of the applicant, I hereby certify that the applicant will comply with the above applicable certification.

NAME OF APPLICANT	AWARD NUMBER AND/OR PROJECT NAME
PRINTED NAME AND TITLE OF AUTHORIZED REPRESENTATIVE	
SIGNATURE	DATE

City of Moscow
Latah County, Idaho
Sixth Street Crossing Over
Paradise Creek

Section 6

Prevailing Wage Determination

THIS PAGE WAS INTENTIONALLY LEFT BLANK

DAVIS BACON WAGE DECISION

The following Davis Bacon Wage Decision(s) apply to all labor activities performed on this project and are included in this Specification document:

CITY OF MOSCOW
EDA AWARD NO. 07-79-07731
SIXTH STREET BRIDGE REPLACEMENT PROJECT
MOSCOW, IDAHO

General Decision Number: ID2022065 02/25/2022

Superseded General Decision Number: ID20210065

State: Idaho

Construction Type: Heavy

Counties: Benewah, Clearwater, and Latah Counties in Idaho

General Decision Number: ID20220082 02/25/2022

Superseded General Decision Number: ID20210082

State: Idaho

Construction Type: Highway

Counties: Latah County in Idaho

"General Decision Number: ID20220065 02/25/2022

Superseded General Decision Number: ID20210065

State: Idaho

Construction Type: Heavy
HEAVY CONSTRUCTION, Including water and sewer line construction and heavy construction projects on treatment plants and industrial (power plants, manufacturing plants, processing plants, etc.) sites

Counties: Benewah, Clearwater and Latah Counties in Idaho.

Note: Contracts subject to the Davis-Bacon Act are generally required to pay at least the applicable minimum wage rate required under Executive Order 14026 or Executive Order 13658. Please note that these Executive Orders apply to covered contracts entered into by the federal government that are subject to the Davis-Bacon Act itself, but do not apply to contracts subject only to the Davis-Bacon Related Acts, including those set forth at 29 CFR 5.1(a)(2)-(60).

If the contract is entered into on or after January 30, 2022, or the contract is renewed or extended (e.g., an option is exercised) on or after January 30, 2022:	. Executive Order 14026 generally applies to the contract. . The contractor must pay all covered workers at least $15.00 per hour (or the applicable wage rate listed on this wage determination, if it is higher) for all hours spent performing on the contract in 2022.
If the contract was awarded on or between January 1, 2015 and January 29, 2022, and the contract is not renewed or extended on or after January 30, 2022:	. Executive Order 13658 generally applies to the contract. . The contractor must pay all covered workers at least $11.25 per hour (or the applicable wage rate listed on this wage determination, if it is higher) for all hours spent performing on that contract in 2022.

The applicable Executive Order minimum wage rate will be adjusted annually. If this contract is covered by one of the Executive Orders and a classification considered necessary for performance of work on the contract does not appear on this wage determination, the contractor must still submit a conformance request.

Additional information on contractor requirements and worker protections under the Executive Orders is available at https://www.dol.gov/agencies/whd/government-contracts.

Modification Number	Publication Date
0	01/07/2022
1	02/18/2022
2	02/25/2022

CARP0001-045 06/01/2020

	Rates	Fringes
CARPENTER (Form Work Only).....	$ 37.12	17.36

ELEC0073-011 01/01/2022

	Rates	Fringes
ELECTRICIAN.....	$ 39.55	19.68

ENGI0370-035 06/01/2018

	Rates	Fringes
POWER EQUIPMENT OPERATOR:		
Backhoe (45,000 gw & under), Cranes (25 tons & under), Drill (8 in bit and over		
GROUP 5.....	$ 28.76	15.95
Backhoe (45,000-110,000 gw), Crane (25-45 tons), Bulldozer (D-6 and over), Grader/Blade, Front-End Loader(4-8 yds), Paver, Scrapers (all)		
GROUP 6.....	$ 29.04	15.95
Backhoe (over 110,000 gw), Cranes (45-85 tons), Heavy Duty Mechanic, Front End Loader (8-10 yds)		
GROUP 7.....	$ 29.31	15.95
Bulldozer (up to D-6)		
GROUP 3.....	$ 28.44	15.95
Cranes (85 tons & over), Front End Loader (10 yds & over)		
GROUP 8.....	$ 30.41	15.95
Front End Loader (under 4 yds)		
GROUP 4.....	$ 28.60	15.95
Rollers (all)		
GROUP 1.....	$ 27.51	15.95

ZONE PAY:

ZONE CENTERS: SPOKANE, PASCO, LEWISTON
ZONE 1: 0-45 Miles: Free
ZONE 2: 45 Miles & Over: $2.00

BOOM PAY (ALL CRANES):

(A): 180'-250': $.50 over scale
(B): over 250': $.80 over scale

IRON0014-006 07/01/2020

	Rates	Fringes
IRONWORKER, REINFORCING AND STRUCTURAL	$ 30.10	34.59

LABO0238-028 06/01/2017

	Rates	Fringes
LABORER (PIPELINE ONLY)		
COMMON	$ 26.28	12.15

LABO0238-031 07/01/2019

	Rates	Fringes
LABORER		
Asphalt Includes Raker, Shoveler, Spreader, and Distributor		
Group 4	$ 28.48	13.00
Flagger		
Group 1A	$ 25.84	13.00

Zone Differential (Add to Zone 1 rates): Zone 2 - $2.00

BASE POINTS: Spokane

Zone 1: 0-45 radius miles from the main post office.
Zone 2: 45 radius miles and over from the main post office

PLAS0072-003 06/01/2021

BENEWAH, BONNER, BOUNDARY, CLEARWATER, IDAHO (NORTH OF THE 46TH PARALLEL), KOOTENAI, LATAH, LEWIS AND NEZ PERCE AND SHOSHONE COUNTIES

ZONE 1:

	Rates	Fringes
CEMENT MASON/CONCRETE FINISHER	$ 32.44	19.56

Zone Differential (Add to Zone 1 rate): Zone 2 - $2.00

BASE POINTS: Spokane, Pasco, Lewiston, Wenatchee

Zone 1: 0-45 radius miles from the main post office

Zone 2: Over 45 radius miles from the main post office

PLUM0044-015 06/01/2019

	Rates	Fringes
PLUMBER		
Zone 1	$ 37.71	23.44

TEAM0690-002 06/01/2020

	Rates	Fringes

TRUCK DRIVER (DUMP)
6 yds and under.....$ 28.79 18.15
over 6 yds.....$ 29.23 18.15

SUID2010-058 08/08/2012

	Rates	Fringes
CARPENTER, Excludes Form Work....	$ 29.92	5.20
LABORER: Common or General.....	$ 23.75	8.98
LABORER: Landscape.....	$ 22.13	11.13
LABORER: Pipelayer.....	$ 17.67	7.26
OPERATOR: Bobcat/Skid Steer/Skid Loader.....	$ 20.97	0.00
OPERATOR: Concrete Batch Plant.....	$ 24.94	11.96
OPERATOR: Forklift.....	$ 21.20	0.00
TRUCK DRIVER: Lowboy Truck.....	$ 21.00	12.10
TRUCK DRIVER: Water Truck.....	$ 24.48	11.67

WELDERS - Receive rate prescribed for craft performing operation to which welding is incidental.

==========

Note: Executive Order (EO) 13706, Establishing Paid Sick Leave for Federal Contractors applies to all contracts subject to the Davis-Bacon Act for which the contract is awarded (and any solicitation was issued) on or after January 1, 2017. If this contract is covered by the EO, the contractor must provide employees with 1 hour of paid sick leave for every 30 hours they work, up to 56 hours of paid sick leave each year. Employees must be permitted to use paid sick leave for their own illness, injury or other health-related needs, including preventive care; to assist a family member (or person who is like family to the employee) who is ill, injured, or has other health-related needs, including preventive care; or for reasons resulting from, or to assist a family member (or person who is like family to the employee) who is a victim of, domestic violence, sexual assault, or stalking. Additional information on contractor requirements and worker protections under the EO is available at
https://www.dol.gov/agencies/whd/government-contracts.

Unlisted classifications needed for work not included within the scope of the classifications listed may be added after award only as provided in the labor standards contract clauses (29CFR 5.5 (a) (1) (ii)).

The body of each wage determination lists the classification and wage rates that have been found to be prevailing for the cited type(s) of construction in the area covered by the wage

determination. The classifications are listed in alphabetical order of ""identifiers"" that indicate whether the particular rate is a union rate (current union negotiated rate for local), a survey rate (weighted average rate) or a union average rate (weighted union average rate).

Union Rate Identifiers

A four letter classification abbreviation identifier enclosed in dotted lines beginning with characters other than ""SU"" or ""UAVG"" denotes that the union classification and rate were prevailing for that classification in the survey. Example: PLUM0198-005 07/01/2014. PLUM is an abbreviation identifier of the union which prevailed in the survey for this classification, which in this example would be Plumbers. 0198 indicates the local union number or district council number where applicable, i.e., Plumbers Local 0198. The next number, 005 in the example, is an internal number used in processing the wage determination. 07/01/2014 is the effective date of the most current negotiated rate, which in this example is July 1, 2014.

Union prevailing wage rates are updated to reflect all rate changes in the collective bargaining agreement (CBA) governing this classification and rate.

Survey Rate Identifiers

Classifications listed under the ""SU"" identifier indicate that no one rate prevailed for this classification in the survey and the published rate is derived by computing a weighted average rate based on all the rates reported in the survey for that classification. As this weighted average rate includes all rates reported in the survey, it may include both union and non-union rates. Example: SULA2012-007 5/13/2014. SU indicates the rates are survey rates based on a weighted average calculation of rates and are not majority rates. LA indicates the State of Louisiana. 2012 is the year of survey on which these classifications and rates are based. The next number, 007 in the example, is an internal number used in producing the wage determination. 5/13/2014 indicates the survey completion date for the classifications and rates under that identifier.

Survey wage rates are not updated and remain in effect until a new survey is conducted.

Union Average Rate Identifiers

Classification(s) listed under the UAVG identifier indicate that no single majority rate prevailed for those classifications; however, 100% of the data reported for the classifications was union data. EXAMPLE: UAVG-OH-0010 08/29/2014. UAVG indicates that the rate is a weighted union average rate. OH indicates the state. The next number, 0010 in the example, is an internal number used in producing the wage determination. 08/29/2014 indicates the survey completion date for the classifications and rates under that identifier.

A UAVG rate will be updated once a year, usually in January of each year, to reflect a weighted average of the current negotiated/CBA rate of the union locals from which the rate is based.

WAGE DETERMINATION APPEALS PROCESS

1.) Has there been an initial decision in the matter? This can be:

* an existing published wage determination
* a survey underlying a wage determination
* a Wage and Hour Division letter setting forth a position on a wage determination matter
* a conformance (additional classification and rate) ruling

On survey related matters, initial contact, including requests for summaries of surveys, should be with the Wage and Hour National Office because National Office has responsibility for the Davis-Bacon survey program. If the response from this initial contact is not satisfactory, then the process described in 2.) and 3.) should be followed.

With regard to any other matter not yet ripe for the formal process described here, initial contact should be with the Branch of Construction Wage Determinations. Write to:

Branch of Construction Wage Determinations
Wage and Hour Division
U.S. Department of Labor
200 Constitution Avenue, N.W.
Washington, DC 20210

2.) If the answer to the question in 1.) is yes, then an interested party (those affected by the action) can request review and reconsideration from the Wage and Hour Administrator (See 29 CFR Part 1.8 and 29 CFR Part 7). Write to:

Wage and Hour Administrator
U.S. Department of Labor
200 Constitution Avenue, N.W.
Washington, DC 20210

The request should be accompanied by a full statement of the interested party's position and by any information (wage payment data, project description, area practice material, etc.) that the requestor considers relevant to the issue.

3.) If the decision of the Administrator is not favorable, an interested party may appeal directly to the Administrative Review Board (formerly the Wage Appeals Board). Write to:

Administrative Review Board
U.S. Department of Labor
200 Constitution Avenue, N.W.
Washington, DC 20210

4.) All decisions by the Administrative Review Board are final.

==========

END OF GENERAL DECISIO"

"General Decision Number: ID20220082 02/25/2022

Superseded General Decision Number: ID20210082

State: Idaho

Construction Type: Highway

County: Latah County in Idaho.

HIGHWAY CONSTRUCTION PROJECTS

Note: Contracts subject to the Davis-Bacon Act are generally required to pay at least the applicable minimum wage rate required under Executive Order 14026 or Executive Order 13658. Please note that these Executive Orders apply to covered contracts entered into by the federal government that are subject to the Davis-Bacon Act itself, but do not apply to contracts subject only to the Davis-Bacon Related Acts, including those set forth at 29 CFR 5.1(a)(2)-(60).

If the contract is entered into on or after January 30, 2022, or the contract is renewed or extended (e.g., an option is exercised) on or after January 30, 2022:	. Executive Order 14026 generally applies to the contract. . The contractor must pay all covered workers at least $15.00 per hour (or the applicable wage rate listed on this wage determination, if it is higher) for all hours spent performing on the contract in 2022.
If the contract was awarded on or between January 1, 2015 and January 29, 2022, and the contract is not renewed or extended on or after January 30, 2022:	. Executive Order 13658 generally applies to the contract. . The contractor must pay all covered workers at least $11.25 per hour (or the applicable wage rate listed on this wage determination, if it is higher) for all hours spent performing on that contract in 2022.

The applicable Executive Order minimum wage rate will be adjusted annually. If this contract is covered by one of the Executive Orders and a classification considered necessary for performance of work on the contract does not appear on this wage determination, the contractor must still submit a conformance request.

Additional information on contractor requirements and worker protections under the Executive Orders is available at https://www.dol.gov/agencies/whd/government-contracts.

Modification Number	Publication Date
0	01/07/2022
1	02/25/2022

PLAS0072-001 06/01/2021

ZONE 1:

	Rates	Fringes
CEMENT MASON/CONCRETE FINISHER	$ 32.44	19.56

Zone Differential (Add to Zone 1 rate): Zone 2 - $2.00

BASE POINTS: Spokane, Pasco, Lewiston, Wenatchee

Zone 1: 0-45 radius miles from the main post office

Zone 2: Over 45 radius miles from the main post office

SUID2013-010 06/17/2013

	Rates	Fringes
CARPENTER (Form Work Only)	$ 26.57	8.10
ELECTRICIAN	$ 26.83	11.94
HIGHWAY/PARKING LOT STRIPING: Painter	$ 23.80	6.67
LABORER: Asphalt, Includes Raker, Shoveler, Spreader and Distributor	$ 22.86	9.40
LABORER: Common or General	$ 22.92	10.01
LABORER: Concrete Saw (Hand Held/Walk Behind)	$ 23.98	11.05
LABORER: Grade Checker	$ 23.41	10.78
LABORER: Mason Tender - Cement/Concrete	$ 23.52	10.39
OPERATOR: Backhoe/Excavator/Trackhoe	$ 25.97	10.95
OPERATOR: Bobcat/Skid Steer/Skid Loader	$ 25.35	11.55
OPERATOR: Broom/Sweeper	$ 26.82	11.55
OPERATOR: Bulldozer	$ 25.73	11.51
OPERATOR: Crane	$ 27.18	10.97
OPERATOR: Crusher	$ 25.06	9.23
OPERATOR: Grader/Blade	$ 26.00	10.30
OPERATOR: Hydroseeder	$ 24.76	11.51
OPERATOR: Loader	$ 25.76	10.31
OPERATOR: Mechanic	$ 26.00	9.93
OPERATOR: Oiler	$ 25.66	9.23

OPERATOR: Paver (Asphalt,
Aggregate, and Concrete).....$ 25.66 11.03

OPERATOR: Roller (Subgrade).....$ 22.24 8.57

OPERATOR: Roller.....$ 25.49 11.55

OPERATOR: Rotomill.....$ 29.78 4.52

OPERATOR: Screed.....$ 25.71 11.55

TRAFFIC CONTROL: Flagger.....$ 21.46 10.12

TRAFFIC CONTROL:
Laborer-Cones/
Barricades/Barrels -
Setter/Mover/Sweeper.....$ 22.66 10.90

TRUCK DRIVER: Dump Truck.....$ 23.40 10.75

TRUCK DRIVER: Lowboy Truck.....$ 22.12 13.20

TRUCK DRIVER: Oil
Distributor Truck.....$ 22.54 12.35

TRUCK DRIVER: Water Truck.....$ 23.12 10.75

WELDERS - Receive rate prescribed for craft performing operation to which welding is incidental.

==========

Note: Executive Order (EO) 13706, Establishing Paid Sick Leave for Federal Contractors applies to all contracts subject to the Davis-Bacon Act for which the contract is awarded (and any solicitation was issued) on or after January 1, 2017. If this contract is covered by the EO, the contractor must provide employees with 1 hour of paid sick leave for every 30 hours they work, up to 56 hours of paid sick leave each year. Employees must be permitted to use paid sick leave for their own illness, injury or other health-related needs, including preventive care; to assist a family member (or person who is like family to the employee) who is ill, injured, or has other health-related needs, including preventive care; or for reasons resulting from, or to assist a family member (or person who is like family to the employee) who is a victim of, domestic violence, sexual assault, or stalking. Additional information on contractor requirements and worker protections under the EO is available at
https://www.dol.gov/agencies/whd/government-contracts.

Unlisted classifications needed for work not included within the scope of the classifications listed may be added after award only as provided in the labor standards contract clauses (29CFR 5.5 (a) (1) (ii)).

The body of each wage determination lists the classification and wage rates that have been found to be prevailing for the cited type(s) of construction in the area covered by the wage

determination. The classifications are listed in alphabetical order of ""identifiers"" that indicate whether the particular rate is a union rate (current union negotiated rate for local), a survey rate (weighted average rate) or a union average rate (weighted union average rate).

Union Rate Identifiers

A four letter classification abbreviation identifier enclosed in dotted lines beginning with characters other than ""SU"" or ""UAVG"" denotes that the union classification and rate were prevailing for that classification in the survey. Example: PLUM0198-005 07/01/2014. PLUM is an abbreviation identifier of the union which prevailed in the survey for this classification, which in this example would be Plumbers. 0198 indicates the local union number or district council number where applicable, i.e., Plumbers Local 0198. The next number, 005 in the example, is an internal number used in processing the wage determination. 07/01/2014 is the effective date of the most current negotiated rate, which in this example is July 1, 2014.

Union prevailing wage rates are updated to reflect all rate changes in the collective bargaining agreement (CBA) governing this classification and rate.

Survey Rate Identifiers

Classifications listed under the ""SU"" identifier indicate that no one rate prevailed for this classification in the survey and the published rate is derived by computing a weighted average rate based on all the rates reported in the survey for that classification. As this weighted average rate includes all rates reported in the survey, it may include both union and non-union rates. Example: SULA2012-007 5/13/2014. SU indicates the rates are survey rates based on a weighted average calculation of rates and are not majority rates. LA indicates the State of Louisiana. 2012 is the year of survey on which these classifications and rates are based. The next number, 007 in the example, is an internal number used in producing the wage determination. 5/13/2014 indicates the survey completion date for the classifications and rates under that identifier.

Survey wage rates are not updated and remain in effect until a new survey is conducted.

Union Average Rate Identifiers

Classification(s) listed under the UAVG identifier indicate that no single majority rate prevailed for those classifications; however, 100% of the data reported for the classifications was union data. EXAMPLE: UAVG-OH-0010 08/29/2014. UAVG indicates that the rate is a weighted union average rate. OH indicates the state. The next number, 0010 in the example, is an internal number used in producing the wage determination. 08/29/2014 indicates the survey completion date for the classifications and rates under that identifier.

A UAVG rate will be updated once a year, usually in January of each year, to reflect a weighted average of the current negotiated/CBA rate of the union locals from which the rate is based.

WAGE DETERMINATION APPEALS PROCESS

1.) Has there been an initial decision in the matter? This can be:

* an existing published wage determination
* a survey underlying a wage determination
* a Wage and Hour Division letter setting forth a position on a wage determination matter
* a conformance (additional classification and rate) ruling

On survey related matters, initial contact, including requests for summaries of surveys, should be with the Wage and Hour National Office because National Office has responsibility for the Davis-Bacon survey program. If the response from this initial contact is not satisfactory, then the process described in 2.) and 3.) should be followed.

With regard to any other matter not yet ripe for the formal process described here, initial contact should be with the Branch of Construction Wage Determinations. Write to:

Branch of Construction Wage Determinations
Wage and Hour Division
U.S. Department of Labor
200 Constitution Avenue, N.W.
Washington, DC 20210

2.) If the answer to the question in 1.) is yes, then an interested party (those affected by the action) can request review and reconsideration from the Wage and Hour Administrator (See 29 CFR Part 1.8 and 29 CFR Part 7). Write to:

Wage and Hour Administrator
U.S. Department of Labor
200 Constitution Avenue, N.W.
Washington, DC 20210

The request should be accompanied by a full statement of the interested party's position and by any information (wage payment data, project description, area practice material, etc.) that the requestor considers relevant to the issue.

3.) If the decision of the Administrator is not favorable, an interested party may appeal directly to the Administrative Review Board (formerly the Wage Appeals Board). Write to:

Administrative Review Board
U.S. Department of Labor
200 Constitution Avenue, N.W.
Washington, DC 20210

4.) All decisions by the Administrative Review Board are final.

==========

END OF GENERAL DECISIO"

POST THIS ON JOB SITE WITH WAGE DECISION(S)

EMPLOYEE RIGHTS
UNDER THE DAVIS-BACON ACT

FOR LABORERS AND MECHANICS EMPLOYED ON FEDERAL OR FEDERALLY ASSISTED CONSTRUCTION PROJECTS

THE UNITED STATES DEPARTMENT OF LABOR WAGE AND HOUR DIVISION

PREVAILING WAGES	You must be paid not less than the wage rate listed in the Davis-Bacon Wage Decision posted with this Notice for the work you perform.
OVERTIME	You must be paid not less than one and one-half times your basic rate of pay for all hours worked over 40 in a work week. There are few exceptions.
ENFORCEMENT	Contract payments can be withheld to ensure workers receive wages and overtime pay due, and liquidated damages may apply if overtime pay requirements are not met. Davis-Bacon contract clauses allow contract termination and debarment of contractors from future federal contracts for up to three years. A contractor who falsifies certified payroll records or induces wage kickbacks may be subject to civil or criminal prosecution, fines and/or imprisonment.
APPRENTICES	Apprentice rates apply only to apprentices properly registered under approved Federal or State apprenticeship programs.
PROPER PAY	If you do not receive proper pay, or require further information on the applicable wages, contact the Contracting Officer listed below:

or contact the U.S. Department of Labor's Wage and Hour Division.

For additional information:

1-866-4-USWAGE

(1-866-487-9243) TTY: 1-877-889-5627

WHD U.S. Wage and Hour Division

WWW.WAGEHOUR.DOL.GOV

U.S. Department of Labor | Employment Standards Administration | Wage and Hour Division

WH 1321 (Revised April 2009)

DERECHOS DEL EMPLEADO

BAJO LA LEY DAVIS-BACON

PARA OBREROS Y MECÁNICOS EMPLEADOS EN PROYECTOS DE CONSTRUCCIÓN FEDERAL O CON ASISTENCIA FEDERAL

LA SECCIÓN DE HORAS Y SUELDOS DEL DEPARTAMENTO DE TRABAJO DE EEUU

SALARIOS PREVALECIENTES No se le puede pagar menos de la tasa de pago indicada en la Decisión de Salarios Davis-Bacon fijada con este Aviso para el trabajo que Ud. desempeña.

SOBRETIEMPO Se le ha de pagar no menos de tiempo y medio de su tasa básica de pago por todas las horas trabajadas en exceso de 40 en una semana laboral. Existen pocas excepciones.

CUMPLIMIENTO Se pueden retener pagos por contratos para asegurarse que los obreros reciban los salarios y el pago de sobretiempo debidos, y se podría aplicar daños y perjuicios si no se cumple con las exigencias del pago de sobretiempo. Las cláusulas contractuales de Davis-Bacon permiten la terminación y exclusión de contratistas para efectuar futuros contratos federales hasta tres años. El contratista que falsifique los registros certificados de las nóminas de pago o induzca devoluciones de salarios puede ser sujeto a procesamiento civil o criminal, multas y/o encarcelamiento.

APRENDICES Las tasas de aprendices sólo se aplican a aprendices correctamente inscritos bajo programas federales o estatales aprobados.

PAGO APROPIADO Si Ud. no recibe el pago apropiado, o precisa de información adicional sobre los salarios aplicables, póngase en contacto con el Contratista Oficial que aparece abajo:

o póngase en contacto con la Sección de Horas y Sueldos del Departamento de Trabajo de EEUU.

Para obtener información adicional:

1-866-4-USWAGE

(1-866-487-9243) TTY: 1-877-889-5627

WHD U.S. Wage and Hour Division

WWW.WAGEHOUR.DOL.GOV

U.S. Department of Labor | Employment Standards Administration | Wage and Hour Division

WH 1321 SPA (Revised April 2009)

City of Moscow
Latah County, Idaho
Sixth Street Crossing Over Paradise Creek

Section 7

City of Moscow Federally Funded Projects Davis Bacon Labor Standards

THIS PAGE WAS INTENTIONALLY LEFT BLANK

CITY OF MOSCOW
GRANT AND SPECIAL FUNDED PROJECTS
DAVIS BACON LABOR STANDARDS REQUIREMENTS
Updated – February 2022

SUMMARY OF RESPONSIBILITIES

Labor Standards Compliance is an effort of all parties involved and prevention is the key to success with labor standards. Some basic objectives to protect worker's rights are:

A. Responsibilities of Grant Administrator:

1. Make sure proper, current wage decision and labor standards provisions are contained in the bid documents.
2. Attend the pre-bid meeting/tour to notify contract bidders of federal labor standards provisions.
3. Conduct 10-day wage check.
4. Verify eligibility of Contractor.
5. Participate in preconstruction conference.
6. Ensure submission of all appropriate documentation, including payroll authorized signature form, payroll overview, signed checklists, requests for Additional Classifications, and documentation of fringe benefit plans.
7. Ensure wage decisions and/or additional classifications and USDOL poster are posted on site.
8. Conduct on-site interviews with laborers and mechanics.
9. Review Certified Payrolls and compare to the employee interviews and wage decisions.
10. Notify Prime Contractor and subcontractors (as applicable) of payroll discrepancies.
11. Notify IDC Specialist of wage restitution found due, including the preparation and submission of Labor Standards Enforcement Reports.
12. Investigate probable violations and complaints of underpayment and submit Labor Standards Enforcement Reports as necessary.

B. Responsibilities of Prime Contractor:

1. Attend pre-construction conference.
2. Review and identify any Additional Classifications needed by all contractors and subcontractors for the project.
3. Read, understand, and sign all appropriate forms from the Grant Administrator, including but not limited to: contractor certification, certificate of substantial completion, pre-construction checklist, and payroll authorized signature form.
4. Comply, in a timely manner, with requests from Grant Administrator. Including documentation of fringe benefits, correction CPRs, and wage restitution.
5. Comply with all applicable requirements and reporting.
6. Include appropriate wage decisions and labor standards clauses in contracts with subcontractors.
7. Insertion of all applicable clauses in all contracts and subcontracts.
8. Ensure labor standards compliance from subcontractors.
9. Post wage decision, including additional wage classifications, at work site.

10. Collect certified payrolls from all subcontractors, if applicable.
11. Submit all certified payrolls to Grant Administrator weekly.
12. Ensure availability of the prime contractor and subcontractor's employees for interviews at the job site with the Grant Administrator or agency representative.

APPLICABLE LAW

A. Davis-Bacon Act: The Davis-Bacon Act (DBA) requires the payment of prevailing wage rates (which are determined by the USDOL) to all workers. The law applies to construction, alterations or repair contracts in excess of $2,000. Construction includes alterations and/or repair, including painting and decorating, of public buildings or public works. Those Davis-Bacon provisions contained in HUD assisted construction programs are known as "Related Acts" and will be referred to as DBRA in this chapter.

B. Copeland "Anti-Kickback" Act: The Copeland Act requires employers to pay employees at least once a week, without any deductions or rebates except permissible deductions. The Copeland Act also requires every employer (contractor and subcontractor) maintain payroll records and to submit weekly payroll reports (CPRs). The Act applies to all contracts covered by Davis-Bacon. Violation of this Act is a criminal offense.

C. Contract Work Hours and Safety Standards Act (CWHSSA): CWHSSA applies to contracts over $100,000. CWHSSA requires workers to receive overtime (O/T) compensation at time and one-half pay for overtime hours (over 40 hours in any workweek) plus full fringe worked on the covered project [(1 and ½ x base pay) + fringe = O/T compensation]. CWHSSA violations render the contractor liable to the underpaid worker for wage restitution and the United States for liquidated damages penalty ($10/calendar day per violation). Intentional violations of CWHSSA standards are considered a federal criminal misdemeanor.

D. Fair Labor Standards Act (FLSA): The FLSA pertains to federal minimum wage rates, overtime pay, recordkeeping and child labor requirements. These requirements generally apply to any labor performed and may be pre-empted by other federal standards such as the DBRA prevailing wage requirements and CWHSSA overtime provisions. Only the USDOL has the authority to administer and enforce FLSA. HUD will refer to the USDOL any possible FLSA violations that are found on HUD projects.

EXEMPTIONS TO DAVIS-BACON AND RELATED ACTS (DBRA)

A. Non-Covered Job Classifications: Workers performing the normal duties of the following job classifications are not subject to prevailing wage requirements of DBRA:

1. Project engineer
2. Project foreman (supervisory only), as distinguished from a working foreman (one who devotes more than twenty (20) percent of his/her time during a work week to mechanic or laborer duties, and who must be paid the applicable rate for the hours so worked).
3. Watchman
4. Clerical workers

B. Volunteer Labor: A volunteer is an individual who performs services for a public or private entity for civic, charitable or humanitarian reasons without promise, expectations or receipt of compensation for services rendered. Individuals are considered to be volunteers only when their services are offered freely and without pressure and coercion, direct or implied, from an employer. Prison or correctional institution inmates can be considered volunteer workers if the institution's program meets certain parameters.

For a project that will have work done solely by volunteers alone or in which there is a mix of paid workers and volunteers, the grantee shall record the name and address of the project, the number of hours worked and the hourly rate for all work performed by volunteers.

Volunteer Liability Insurance: Volunteer participation on a project can include inherent risks and accidents may result in unforeseen injury. In order to protect the community and volunteers, volunteer liability insurance is a solution.

C. Force Account: The U. S. Department of Labor has taken the position that prevailing wage requirements do not apply to employees of a state or political subdivision of a state. In some instances, rather than contracting or subcontracting out construction work, a grant recipient performs the construction in-house, with its own "force account" employees. Such force account work is not subject to the prevailing wage requirements of DBRA. Furthermore, the USDOL does not consider a state or local government to be a contractor, even if it enters into a contract to perform construction work (see 29 CFR Section 5.2(h)).

D. Cleaning: Cleaning performed during construction is subject to prevailing wage provisions. In the absence of a specific wage rate for the cleaning classification, the cleaners must be paid the predetermined wage rate for laborers. Cleaning performed after the completion of construction to prepare the premises for occupancy that is not done under the construction contract is not subject to the prevailing wage requirements.

E. Demolition: Demolition not related to construction is not subject to the prevailing wage requirements of DBRA. For example, the demolition of a building because the structure is no longer needed would not be a covered construction activity. However, where an existing building is being demolished as a phase of a construction project subject to the prevailing wage requirements of DBRA, the demolition would also be covered, as in the case of demolition performed to permit construction of a new building.

F. Utility Employees: Employees of utilities are exempt provided they are only extending existing service to the property.

G. Precutting of Parts and Prefabrication of Assemblies: The precutting of parts and/or the prefabrication of assemblies are not subject to the prevailing wage requirements of DBRA unless conducted in connection with and at the site of the project or in a temporary plant set up elsewhere to supply the needs of the project and dedicated exclusively or nearly so, to performance of the contract or project.

H. Supply and Installation Contracts: The manufacturer or furnisher of materials, supplies or equipment is not subject to prevailing wages unless conducted in connection with and at the site of the project or set up elsewhere to meet the needs of the project. If a supply contract, not otherwise covered, requires the supplier to install the product, the installation portion of

the contract is subject to prevailing wage requirements of DBRA. There is an exception if the installation involves an incidental amount of construction activity. It is not subject to prevailing wage requirements in this instance. Contracts for the supply and installation of window shades, venetian blinds, traverse rods, and draperies involve only an incidental amount of construction activity, and therefore are not subject to prevailing wage decisions. The installation of a lagoon liner or a pre-fabricated park bathroom is an example of work subject to prevailing wage rates. Questions concerning the coverage of installation activity should be referred to the Grants Administrator.

I. Railroad Employees: Employees of railroads operating under collective bargaining agreements that are subject to the Railway Labor Act are not subject to DBRA. However, any workers performing construction work on the railroad under a contract are subject to DBRA.

LABOR STANDARDS ADMINISTRATION: PRE-BID PHASE

A construction project covered by federal labor standards requires a series of specific actions by Grant Administrators prior to awarding a construction contract. Refer to the list in the Summary of Responsibilities.

Bidding Documents

The contract for construction is the vehicle to ensure contractor compliance and Davis-Bacon wage enforcement. Therefore, the bidding documents for each project subject to Davis-Bacon wage rates must contain both a Davis-Bacon wage decision and federal labor standards clauses. It is the responsibility of the Grant Administrator to obtain the most current Davis-Bacon wage decision and provide it and the labor standards clauses to the project architect or engineer to ensure that these documents are included in the bidding documents.

The Grant Administrator must review the bidding documents using the Bid Document Review Certification form and certify they contain the correct Davis-Bacon wage decision, General Conditions and Federal Labor Standards Provisions.

A. Davis-Bacon Wage Decision (Wage Determination): Each construction contract subject to federal Davis-Bacon labor standards requirements must contain a Davis-Bacon wage decision. The Davis-Bacon wage decision is a listing of wage rates and fringe benefits for each classification of laborers and mechanics determined to be prevailing in a given area (usually a county) for a particular type of construction.

   The USDOL has distinguished four general types of construction: Heavy Construction, Highway Construction, Building Construction and Residential Construction. The Grant Administrator is responsible for obtaining the proper wage decision. One can be obtained from the following web address: https://sam.gov/content/home. Davis Bacon projects require wage decisions to be updated to ensure that the most current and correct wage decision is being used. The Grant Administrator is responsible for obtaining and documenting that the wage decision is updated 10 days prior to bid opening.

   Failure to include the required wage decision and appropriate labor standards provisions in bidding documents will not relieve the city or county from potential liabilities for enforcement

actions. It is the prime contractor's responsibility to ensure inclusion of wage rates and labor standards provisions in all subcontracts. Any failure to include a wage decision must be rectified.

B. Updating Wage Decisions: There are specified times that wage decisions must be updated for different procurements. In all cases, wage decisions must be updated to ensure that the proper and correct wage rate is used for the project.

1. Competitive Sealed Bidding

   Most construction contracts fall under the competitive sealed bid procurement process. This procurement process includes wage decisions in the bid documents and has a bid opening date. These projects require a Wage Decisions check to be completed no more than ten (10) days prior to bid opening. If the 10-day check falls on a weekend, the wage rate must be checked the Monday following the 10-day check. If the 10-day check falls on a holiday, the wage rate must be checked the day after the 10-day timeline.

Pre-Bid Meeting

During the pre-bid meeting, the federal labor requirements and wage decision should be reviewed with the contractors. This is the time to determine if all work classification(s) needed for the job are on the wage decision. If the work classification(s) needed do not appear on the wage decision, then an additional classification and wage will be needed. Additional classifications are typically approved after the construction contract is awarded.

LABOR STANDARDS ADMINISTRATION: POST-BID PHASE

The post-bid requirements consist of evaluating and tabulating each of the bidder's responses, verifying contractor eligibility, notifying contractor of award, holding a preconstruction conference (including additional classification requests), and obtaining all appropriate certifications.

Evaluation and Tabulation of bidders

After opening all sealed competitive bids, the grantee evaluates, prepares bid tabulation form and identifies the successful bidder. A successful bidder is the lowest responsive and responsible bidder.

Verification of Contractor Eligibility (Federal Debarred List)

All contractors must be eligible to work on federally assisted contracts. By the insertion of certification of eligibility clauses in all contracts and subcontracts, the prime contractor and all subcontractors state they are eligible for award of federally assisted or insured contracts. The Grant Administrator shall verify that all prime contractors are eligible before contract award by requesting verification.

Prime contractors shall be informed in preconstruction conferences that it is their responsibility to employ only eligible subcontractors. All subcontractors must certify eligibility in written contracts containing federal labor standards provisions.

Notice of Award

The contract must be awarded within 90 days of bid opening. If the contract has not been awarded within ninety (90) days after bid opening, *the Wage Decision must be updated*. To document this, send the new completed Wage Rate Update form to the Grant Administrator.

Preconstruction Conference

The preconstruction conference should address all questions related to the labor standards provisions posed by contractors and subcontractors and also applicable federal labor standards provisions. The preconstruction conference is to make certain that the contractor understands its responsibility for all federal labor standards provisions and Davis-Bacon compliance. The grantee, Grant Administrator and design professional shall hold a conference with the prime contractor and all subcontractors before the start of construction. At this time the contractor will be advised of the overall management of the project including the labor standards provisions.

A Preconstruction Conference Checklist has been prepared as a tool to review project management considerations. Give each contractor and subcontractor on the job a copy of the preconstruction conference packet. Submit the Preconstruction Conference Checklist to the Grant Administrator no more than five (5) days following the date of the conference.

Implementation of Federal Labor Standards

A. Apprentices: The only workers who can be paid less than the wage rate on the wage decision for their work classification are "apprentices" and "trainees" registered in approved apprenticeship or training programs, including Step-Up apprenticeship programs designed for Davis-Bacon construction work. Approved programs are those which have been registered with the U.S. Department of Labor (USDOL), Bureau of Apprenticeship and Training (BAT) or with a BAT-recognized State Apprenticeship Agency (SAC). **Note: Apprentices registered in a state or local (Idaho) sponsored program must also be registered with the USDOL, Bureau of Apprenticeship and Training. The Grant Administrator is responsible for verifying whether the program is registered in the sponsor database. The link to the database can be found here:** http://oa.doleta.gov/bat.cfm.

   Apprentices and trainees are paid wage rates in accordance with the wage schedule in the approved program plus the full fringe amount.

   1. "Probationary apprentice" can be paid as an apprentice if the BAT has certified that the person is eligible for probationary employment as an apprentice.

   2. The allowable ratio of apprentices and trainees to journeymen in any classification shall not be greater than the ratio permitted under the registered program. Apprentices or trainees employed at the job site in excess of the allowable ratio on a day to day basis shall be paid the wage rate contained in the wage decision for the classification of work actually performed.

   3. Any worker listed on a payroll at an apprentice or trainee wage rate, who is not registered with or in a program approved by USDOL/BAT, shall be paid the Davis-Bacon wage rate for the classification of work actually performed.

4. The contractor or subcontractor will be required to furnish to the labor standards compliance person written evidence of the registration of his/her employees in a USDOL approved program.

B. Truck Drivers: Truck drivers employed by a construction contractor or construction subcontractor are not covered by the prevailing wage requirements of the Davis-Bacon Act while engaged in transporting materials or supplies to or from the site work. Truck drivers whose time spent on the site of work that is considered de minimis, such as only a few minutes at a time to pick up or drop off materials or supplies, are also exempt from the Davis-Bacon Act. Davis-Bacon would apply to them only for their time employed "directly upon the site of the work." Davis-Bacon Act coverage will apply to truck drivers while hauling between the project site and any special facilities established exclusively for the project (29 CFR 5.2 (7)(2)).

C. Working Subcontractors/Owner Operators: A working subcontractor/owner operator is a contractor who owns the business and performs the work himself and has no employees. All working subcontractors/owner operators need to be reported on the certified payrolls of whoever hired them. If they are the prime contractor, the grantee is responsible for signing and submitting payrolls. Their name, employee identification number (if applicable), work classification, contract amount and "self-employed" designation must all be included on the certified payroll.

   Contractors working on the project with their employees shall be listed on the payroll. They must list their name, work classification including "owner" and the daily and total hours worked. They do not need to list their rate of pay or amount earned.

D. Relatives: There are no exceptions made in the enforcement of DBRA on the basis of family relationship for relatives who are performing the work of laborers or mechanics. They must be paid the prevailing wage rate for the classification of work performed and be included on the certified payrolls.

E. Certified Payroll Reports (CPRs): Each contractor, subcontractor, and lower-tier subcontractor, shall submit to the Grant Administrator, Certified Payroll Reports for each work week from the time work is started on the project until it is completed. Payrolls shall be numbered sequentially and the last payroll marked "final." If work is not performed on the project during a given work week, a payroll does not need to be submitted if the contractor numbers his payrolls sequentially and notifies the Grant Administrator he will not be working on the project for a specified period of time. Otherwise, the contractor should submit "No Work" payrolls when there is a temporary break in work on the project. Contractors are required to pay workers every week. They cannot put two weeks of work on one payroll. **Payrolls shall be completed and submitted no later than seven (7) workdays following completion of the workweek.**

   The prime contractor is responsible for full compliance with regard to his/her own workforce and with regard to the compliance of every subcontractor. For this reason, all CPRs and any related records are submitted to the Grant Administrator through the prime contractor. Payrolls and related records shall be maintained during the course of the construction work and preserved by the contractor and the subcontractor for at least four (4) years.

F. Certified Payroll Reports Format (Form WH-347): Certified Payroll Reports information may be submitted in any form, provided that the Grant Administrator can reasonably interpret the information to monitor employer compliance with the labor standards and all required information is included on the form. Contractors are encouraged to use USDOL Payroll Form WH-347. The weekly payrolls are called certified because each payroll is signed and contains language certifying that the information reported on the payroll is true. The payroll certification language is on the reverse side of the WH-347. If the contractor uses another type of payroll format, he may attach the certification from the back of the WH-347. Even though a contractor may use an appropriate payroll form of his own choice, he must report all required items of information and submit a copy of the weekly Statement of Compliance or a form containing the identical wording contained in Form WH-347. Only one Statement of Compliance is required for each weekly payroll no matter how many pages are needed to report the employee data.

G. Inspection of Records and On-Site Interviews: Each contractor shall make the required records (CPRs and related documents) available for inspection, copying or transcription by authorized representatives of the City of Moscow or IDEQ. In addition, each employer shall permit authorized representatives to interview employees during working hours on the job site.

Failure by any contractor to submit the required records or to make them available, or to permit on-site employee interviews may, after written notice to the contractor, cause a suspension of any further payment, advance or guarantee of funds. In addition, failure to submit the records on request or to make them available may be grounds for debarment action.

H. Proper Designation of Trade: The classification of each employee must be selected from the wage decision or an approved Additional Classification based on the actual type of work performed. Each worker must be paid no less than the wage rate on the wage decision for that classification regardless of his or her level of skill. In other words, if someone is performing carpentry work on the project, they must be paid no less than the wage rate on the wage decision for Carpenters, even if they are not considered by the contractor to be fully trained as a Carpenter. The only people who can be paid less than the rate for their craft are apprentices registered with the USDOL, Bureau of Apprenticeship and Training.

I. Additional Classifications: If it is found that a wage decision does not contain some of the classifications needed for the project, notify the Grant Administrator. If there is not a suitable classification on the existing wage decision, then an additional classification will be requested. The rate of pay for the additional classification cannot be below the unskilled labor wage rate on the wage decision. Rates for additional laborers, truck drivers and power equipment operators should be compared with other laborers, truck drivers and power equipment operators respectively. Requested rates should be comparable to similar occupations listed in similar classifications. The Additional Classification Request form will be completed by the Grant Administrator and sent to IDEQ along with a copy of the project wage decision. IDEQ will forward the additional classification request to the USDOL for approval and forward their determination to the Grant Administrator.

COMPLIANCE MONITORING AND ENFORCEMENT

There are several important aspects of effective labor standards compliance. Preventive measures which can be undertaken prior to the start of construction reduce the commission of violations after construction begins. However, misunderstandings can still occur. Monitoring identifies possible misunderstandings on the part of the employers, discrepancies in the record, and violations. The two key aspects of routine monitoring include regular reviews of project CPRs and on-site interviews with laborers employed on the project. This routine monitoring is performed by the Grant Administrator to ensure the compliance of all contractors with the applicable labor standards provisions. Written monitoring reports to the principal contractor advise the contractor of the status of compliance, provide clarification where misunderstanding may exist, and advise the contractor of any additional submissions which may be required to correct discrepancies or to complete the record. Contractors are permitted thirty (30) days to provide missing documentation, and correct any discrepancies or violations, including any underpayments of wages.

Weekly Payroll Reviews

The Grant Administrator shall insist upon prompt submission of all payrolls no later than seven (7) work days following completion of the workweek. The Grant Administrator shall withhold funds from the contractor if excessively delinquent in the submission of payrolls. The payrolls shall be examined upon receipt so any necessary corrective action may be initiated before the problem multiplies, and may be accomplished while the workers are still available. Special attention should be given to each project by the Grant Administrator during the early stages of construction to determine whether the principal contractor is meeting his responsibilities regarding payrolls. Spot-checking of payrolls is permissible after the initial review of four to five weeks of payrolls indicates no significant problems. Initial CPR review parameters and corrective actions required of the contractor shall include the following aspects:

A. Payroll Format: Contractors are urged to use Payroll Form WH-347 which accounts for all required information and includes the "Statement of Compliance" (the certified part of the payroll) on its reverse side. Employers may utilize any other appropriate payroll form provided that it contains all of the required information and is accompanied by a statement containing the identical wording on the form WH-347.

B. Foreman: If a foreman is listed on the payroll with no other classification, it must be determined if he is a working foreman on a project. A project foreman is distinguished from a working foreman.

    1. Project Foreman: This job is supervisory in nature. He can spend up to twenty (20) percent of his time performing mechanic or laborer duties and will be exempt from Davis-Bacon wages. He does not need to be listed on the payroll.

    2. Working Foreman: This job is one that devotes more than twenty (20) percent of the time during a workweek to mechanic or laborer duties. This foreman must be paid the Davis-Bacon rate for all the hours worked. The classification would be the one that he performs the mechanic or laborer duties in.

C. Split Classification(s) This term refers to employees performing work in more than one classification during the same workweek. The employee must be paid the Davis-Bacon rate for

actual hours spent in each classification, provided the work performed is capable of separation into more than one classification, and provided time records are kept in accordance with actual hours spent in each classification.

D. Hours Worked, Pay Rates, and Gross Wages Earned: The daily and total hours worked for the week per employee per classification must be shown. List actual hourly rate paid to the employee for straight time worked plus any cash fringes paid to the employee. The basic hourly rate and fringe rate cannot be less than the applicable wage decision in the approved contract specifications. The payroll should only show the regular and overtime hours worked on the Davis-Bacon covered project. If an employee performs work at job sites other than the project for which the payroll is prepared, those "other job" hours should not be reported on the payroll. For employees with earnings on other projects, gross wages for the project for which the payroll is prepared can be shown over gross earnings for "all projects" (for example, $425.40/$764.85). Deductions and net pay are based on the "all projects" earnings.

> Corrections: Contractors must submit a supplemental Certified Payroll Report or other written documentation reflecting daily and total hours worked for the week per employee as well as the fringe benefit contribution. If underpayments have occurred, the contractor shall be required to make restitution.

E. Overtime Hours Worked: Overtime hours shall be compensated at not less than one and one-half (1 and 1/2) times the regular rate of basic pay plus the straight-time rate of any required fringe benefits for anything over a 40-hour work week. Weekly hours shall be reviewed to determine whether overtime hours were worked and properly compensated. Be especially careful when reviewing split classifications because sometimes hours between classifications are not totaled and overtime can be missed.

> Corrections: Where CWHSSA overtime violations occur (contracts over $100,000), the contractor shall be required to pay restitution to the affected employees and shall be notified of liability for liquidated damages. Only overtime hours worked on the covered project are subject to CWHSSA compensation. Where the project is not subject to CWHSSA, the employer will be notified of possible FLSA overtime violations.

F. Fringe Benefits: Where fringe benefits are included on the wage decision or where the employer seeks credit for fringe benefit payments, the employer shall certify as to the payment of fringe benefits on the *Statement of Compliance* (reverse of WH-347) by marking either 4(a), that fringe benefits are paid to approved funds, plans or programs, or 4(b) that fringe benefits are paid in cash, and note any exceptions under 4(c). A fringe benefits program includes health insurance, retirement, life insurance, and some contributions to training funds (See page 12 for more information about Fringe Benefits). Fringe benefits do not include employer payments or contributions required by other federal, state or local laws, such as the employer's contribution to Social Security or some disability insurance payments.

> Corrections: Contractors shall be required to submit corrected CPRs where the CPR does not indicate how the employer met any fringe benefit obligation contained in the wage decision. If fringe benefits are contained in the wage decision and the contractor does not participate in a bona fide fringe benefit program, the employer shall pay the cash equivalent of the required fringe benefit directly to the employees

with the basic rate of pay. (Note: Fringe is paid for overtime worked, but not computed in the time and one half for overtime pay.) Where underpayments have occurred, the contractor shall be required to make restitution to the affected employees.

G. Deductions Made and Actual Net Wages Paid: All deductions shall be identified and reviewed for any non-permissible deductions. Permissible deductions that **do not require** written authorization from the employee include deductions made in compliance with requirements of federal, state or local law, (e.g. taxes, social security, deductions required by court processes – including Child Support withholdings, etc.). **Any voluntary deduction** (savings account, loan repayment, employee contribution to health insurance, wage advance, pensions, life or accident insurance, and retirement plans) **must be authorized in writing by the employee** (see Employee Voluntary Deduction Authorization Form). The Voluntary Deduction Authorization Form signed by the employee is all that is needed and should accompany the first payroll on which the deduction appears. Deductions for tools are permissible only when the employee provides written authorization and it is a benefit to the employee. An excerpt from 29 CFR 3 provides additional information of permissible deductions. Other deductions are not allowable without prior approval from the U.S. Department of Labor.

H. Authorized Signature: The statement of compliance must be signed (original signature) by a principal of the firm (owner or officer such as the president or treasurer) or by an authorized agent (a person authorized by a principal in writing to sign the payroll reports). The signature authorization must be submitted with the first payroll.

Fringe Benefits

If fringe benefits are paid into a plan, the following criterion applies and documentation should be submitted to the Grant Administrator for review at the preconstruction conference (prior to the first payroll):

A. A contractor may credit contributions for bona fide fringe benefits. Bona fide benefits are those common to the construction industry and are paid into a fund, plan or program on the employee's behalf. Contractors may take credit for contributions made under such conventional plans without requesting approval of the Grant Administrator. These plans are funded plans. See "G" below for examples and guidelines.

B. Contributions to funded plans must be made irrevocable and paid at least quarterly to a third-party trust.

C. When the per hour contribution for benefits paid into a plan do not equal the total rate set forth in the wage decision, the difference must be paid to the employee in cash.

D. Fringe benefits must be paid for straight time and overtime; however, fringe benefits are not included when computing the overtime rate.

E. Employees excluded from funded plans must be paid fringe benefits in cash.

F. Vacation and sick leave plans are generally unfunded, paid from the contractor's own account, and require Grant Administrator approval before a contractor takes credit toward meeting the fringe benefit obligation.

G. The fringe may be shown as $4.15 + 3 1/2%. The 3 1/2% is computed on the base rate, then added back to the fringe. For example, base rate is $21.68 and fringe rate is $4.15 + 3 1/2%. Multiply the base rate by the percent fringe ($21.68 x .035 =.76). Add the amount computed to the fringe ($4.15 + .76 = $4.91). Total fringe required is $4.91. For apprentices, the percentage base rate is used to calculate the fringe.

The following method is an example on how to determine if the amount contributed to the plan equals the amount required to be paid for fringe benefits per the appropriate Davis-Bacon Wage Decision.

METHOD: In determining the cash equivalent credit for fringe benefit payments, take the total amount that would be paid into the funded plan for a year and divide by 2080 hours.

EXAMPLE: Contractor pays $100/month to a funded health insurance plan. Davis-Bacon Wage Rates require $4/hour paid for fringe benefits.

FORMULA: ($100 x 12) divided by 2080 = .57 cents as the cash equivalent.

RESULT: The contractor must pay $3.43 to the employee in cash for fringe benefits and the remaining .57 cents to the funded plan. The contractor must note on the back of the payroll under (4)(a-c) how fringe benefits are paid and provide documentation for the funded plan as listed below.

Adequacy of fringe benefits will be determined by the Grant Administrator based upon a review of the following information that you are requested to submit:

1. Description of the coverage that you provide those employees and the name, address and phone number of the third-party trustee.

2. Signed authorization of those employees to accept those specific employer-paid contribution amounts considered bona fide fringe benefits.

3. The providers proof of payment into the plan, fund or program (i.e., monthly billing statement).

This adequacy is applicable for one (1) year from the date of review and applies to HUD funded projects.

Note: All contractors, based in Idaho and those based out of the state, that are doing work in Idaho are required to pay Idaho Unemployment Insurance. However, this amount does not count toward the required Davis-Bacon Fringe Benefit.

The above requested information must be submitted to: Grants Manager, City of Moscow, P O Box 9203, Moscow ID 83843.

Falsification of Certified Payroll Reports

Contractors who willfully violate the labor standards provisions may falsify Certified Payroll Reports to conceal the violations. Willfully violating contractor's Certified Payroll Reports often contain indicators that permit a Grant Administrator to determine whether they were falsified. Where falsification is suspected, it may be appropriate to send questionnaires to the employees to gather more information to determine the nature and extent of any violations. In order to resolve violations involving falsified Certified Payroll Reports, it is often necessary to conduct an investigation to determine the true work and wage payment activity and to "reconstruct" the payroll.

Common indicators of falsification and willful violations follow:

A. Ratio of Laborers to Mechanics: Except for concrete, landscaping and similar contractors, the ratio of laborers to mechanics should not exceed 1 to 1. A higher ratio of laborers normally indicates misclassification. In other words, laborers are performing some or all of mechanic's work. The false information may be limited to the classification of work.

B. Too Few or Irregular Hours: Most workers are employed on a regular forty (40) hour per week basis. CPRs that consistently reflect less than forty (40) hours per week for all or certain groups of employees or that reflect erratic work schedules (e.g., the crew works only a few hours per day scattered throughout the work week), indicate that the hours may have been reduced to give the appearance of compliance. The falsification in these cases may be limited to the hours worked.

C. Discrepancies in Wage Computations: CPRs that reflect frequent discrepancies in wage computations, e.g., even gross wage payments ($400/week) computed from an uneven hourly wage rate ($15.67/hour), indicate that the employees may be working on a piece rate basis or at an even ($10/hour) wage rate. Here, the falsification may involve the hours worked or the rate of pay, or both.

D. Extraordinary Deductions: Unexplained or unusually high deductions may indicate that the employee is being required to kickback a portion of their earnings. While this would indicate willful violations, it does not necessarily indicate falsification. The information on the CPR may otherwise be accurate.

On-Site Inspection

Maintaining compliance during the course of construction will save time, trouble, and expense to the contractor and grantee involved. Grant Administrators are encouraged to time their initial on-site monitoring within the first three (3) weeks of construction to assure all postings are displayed and conduct on-site interviews to identify potential problems as early as possible. The following on-site activities are required:

A. Posting: The Grant Administrator must ensure the wage decision any additional classifications and other required materials are posted by the contractor at the work site in a prominent and accessible place where the workers can easily read them. The Federal Labor Poster that informs employees of their rights and indicates complaints will be received by the Grant Administrator shall also be conspicuously displayed.

B. Employee Interviews: Every attempt shall be made to conduct on-site employee interviews with the workers on the job site. The purpose of the interviews is to capture observations of the work being performed and to get the workers' views on the hours they work, the type of work they perform and the wages they receive. Information gathered during the interview is recorded on the Record of Employee Interview form. The Record of Employee Interview form is compared to the corresponding contractor and subcontractors certified payrolls to test and verify the accuracy of the payroll information. If on-site interviews cannot be conducted, then mail interviews must be conducted.

Grant Administrators will make every attempt to interview up to ten (10) percent of the workers in all trades. At a minimum, these interviews would include at least one (1) person in each trade and each classification for each contractor. However, Grant Administrators are encouraged to target interviews to projects and/or groups of workers where violations are suspected or alleged. In this way, on-site interviews can be used to support a specific on-going investigation.

1. Place of Interview. Employees currently employed may be interviewed during working hours on the job, provided the interview can be properly and privately conducted on the premises. In cases of possible falsification of records, fear of reprisals or intimidation, it may be more advisable to conduct the interview elsewhere.

2. Initiating the Interview. The interviewer shall begin the interview by identifying themselves to the worker. They must confirm their identity by showing the worker credentials and explain the project is being constructed with assistance from the federal government, the payment of prevailing wages on construction projects with federal assistance is required by law, and the purpose of the interview is to obtain information for use in determining whether the required wages are being paid. Inform the employee that the information given during the interview is confidential and that their identity will only be disclosed with prior written consent of the employee.

3. Interview Time. If the interview is conducted on the job site, it shall be arranged causing the least inconvenience to the employer and employee.

Note: Interviews with non-English speaking workers will be conducted by a bi-lingual interviewer or with the assistance of a third-party interpreter. At no time shall the employer or other employees be used for interpretive services.

C. Record of Employee Interview: A Record of Employee Interview has been prepared as a convenient format for recording interviews. Once the corresponding certified payroll reports are received, the information on the Record of Employee Interview must be compared to the payroll reports. Any discrepancies noted between Record of Employee Interview information and that on the payroll report need to be noted in Remarks. If discrepancies are noted, follow-up actions to resolve the discrepancies must be taken.

LABOR STANDARDS FREQUENTLY ASKED QUESTIONS

1. What wage rate would a contractor pay their employee while traveling to and from a job site?

   Contractors are not bound by any Davis-Bacon regulations concerning the compensation of their employees during their travel time. However, the Fair Labor Standards Act mandates the payment of at least minimum wage to employees during travel time.

2. Should a contractor pay an employee overtime for driving to and from work on top of their forty-hour work week?

   No, the employee clock starts at the job site, therefore, the hours traveled to and from work do not count against the forty-hour work week, but the employee must be compensated according to the Fair Labor Standards Act. See number one.

3. If a contractor pays an employee his/her hourly rate for their travel time to and from a job site, could this be considered a fringe benefit?

   Yes. As long as it is a written statement included in the company policy.

4. If a contractor works on multiple projects, should they include all labor hours on the certified payroll?

   For example, if a contractor is working on a grant-funded City project and is also working on a project for someone else in another location that is NOT a City project, the contractor does not have to report any of the hours worked on the other project. He is only required to report the City project hours. However, the contractor is required to report the gross wages earned on all projects followed by the gross wages earned on the City project. The contractor can do this on the payroll itself. This is our way of finding out whether or not a contractor is paying overtime.

5. Are apprentices entitled to fringe benefits, or are they only entitled an hourly rate based on a journeyman's hourly rate?

   Apprentices that are registered with a USDOL Approved Apprenticeship Program are entitled to a percentage of the journeyman wage rate plus full fringe benefits.

6. Can a contractor require an employee to work during a week where there is a paid holiday? Would the holiday pay be considered in the regular forty-hour week or would the employee have to work the forty regular hours and get paid holiday hours as overtime?

   Employees must work a forty-hour work week before they are entitled to overtime. In the case above, the contractor can ask his/her employees to work up to a forty-hour work week before paying them overtime wages. However, the contractor must compensate employees for the holiday pay.

7. Do Davis-Bacon regulations have to be enforced if a "Surveyor and Surveyor Helper" classifications are working on a street improvement project?

Surveyors are "service" oriented and thus exempt from Davis-Bacon wages. If you see a Surveyor on any payrolls you are reviewing, don't worry about the Davis-Bacon implication. However, if you find a "service" orientated classification on any payroll, review only, do not make the judgment yourself, contact the Grants Administrator for clarification.

8. If a well drilling company is either testing or drilling exploratory wells, do Davis-Bacon wage rates apply?

   No. This is considered a service. However, when a drilling company drills a well in order to put it into service or production, then Davis-Bacon wage rates come into play and apply to the drilling rig operators.

9. Does the televising of lines fall under Davis-Bacon?

   No, the video recording of lines is exempt from Davis-Bacon as it is considered a service.

10. Is the use of a company truck for personal use considered a fringe benefit to an employee?

    No. It is not considered a fringe benefit. The use of the truck is considered as payment for travel expenses and is incurred for the employer's benefit.

11. If a contractor subs out to a subcontractor who has 4-5 contracted laborers how should the subcontractor account for the hours and wage rates?

    Consider the contract laborers as subs, as long as they are being paid according to an agreement and, for this situation, it is OK for the subcontractor carrying the contract laborers on his payroll. Have each of the subcontractors listed on the payroll, just like an owner/operator does.

12. Does an employee who worked 38 hours during a week and who took 8 hours of vacation earn overtime pay to the week?

    No, the employee must have worked over 40 hours during a week in order to earn overtime pay regardless of the vacation time taken during the week.

13. Are per diem and lodging expense payments to employees working out of town considered fringe benefits?

    No, these expenses are part of doing business for the employer. If the employee was not working out of town the payments would not be paid to the employee, therefore, they are not considered fringe benefits but are a cost of doing business.

14. What is NOT considered a bona fide fringe benefit?

    The Davis-Bacon Act excludes fringe benefits which a contractor or subcontractor is obligated to provide under other Federal, State or Local law. For example, payment for workman's compensation insurance under either a compulsory or elective State Statute is not considered payments for fringe benefits. While each situation must be separately considered on its own

merits, payments made for travel, subsistence or to industry promotion funds are not normally payments for fringe benefits under the Act.

Supplemental General Conditions

These Supplemental General Conditions are to be part of a grant or special funded construction project for the City of Moscow.

Preconstruction Conference

After the contract(s) have been awarded but before the start of construction, a conference will be held for the purpose of discussing requirements on such matters as project supervision, progress schedule and reports, payrolls, payment to contractors, contract change order, insurance, safety and other items pertinent to the project. The contractor shall arrange to have all subcontractors and supervisory personnel connected with the project on hand to meet with representatives of the engineer and owner to discuss any problems anticipated.

Reports and Information

The contractor, at such times and in such forms as the owner may require, shall furnish the owner such periodic reports as requested pertaining to the work or services undertaken pursuant to this contract, the costs and obligations incurred or to be incurred in connection therewith, and any other matters covered by this contract.

Conflict of Interest

No member, officer, or employees of the grantee, or its designees or agents, no members of the grantee's governing body and no other public official of the grantee who exercises any functions or responsibilities with respect to this contract during his/her tenure or for one (1) year thereafter, shall have any interest, direct or indirect, in work to be performed in connection with this contract. All contractors shall incorporate, or cause to be incorporated, in all subcontracts, a provision prohibiting such interest.

Minority Business Enterprise

1. Include any such qualified firms on solicitation lists.

2. Assure that such firms are solicited whenever they are potential sources.

3. When economically feasible, divide total requirements into small tasks or quantities so as to permit such firms maximum participation.

4. Where possible, establish delivery schedules which will encourage such participation.

5. Use the services and assistance of the Small Business Administration, Idaho Transportation Department's Disadvantage Business Enterprise Program, and other sources when appropriate. (24 CFR Part 85.36(e)(vi)).

Public Works Licensing of Contractors

Prior to the award of the contract, bidders shall possess or obtain a license issued in the state of Idaho by the Idaho Public Works Contractors License Board in the class and type specified for the value and scope of work to be done in accordance with the provision of Title 54, Chapter 19, Idaho Code, as amended. Subcontractors undertaking to perform any work covered by the contract must also possess or obtain a license prior to award of the contract. Any construction project with an estimated cost of less than fifty thousand dollars ($50,000) is exempt from the licensing requirement.

Standard Environmental Mitigation Measures

1. The construction contractors must comply with the Rules for the Control of Air Pollution in Idaho, IDAPA 58.01.01.651, by implementing precautions to prevent particulate matter from becoming airborne.

2. If any items of suspected historical or archaeological value are uncovered during construction, the contractor will be required to stop work and contact a City representative as soon as possible.

3. The collection and disposal of storm and surface water runoff from the project site must comply with the Idaho Department of Environmental Quality's (DEQ) Catalog of Storm Water Best Management Practices for design of all storm water treatment and disposal systems.

4. The contractor shall comply with the provisions of the Environmental Protection Agency's National Pollutant Discharge Elimination System (NPDES) General Permit for Storm Water Discharge from Construction Activities and the Construction Storm Water Pollution Prevention Plan (SWPPP).

5. If during the construction of the project, an underground storage tank, buried drum, other container, contaminated soil, or debris not scheduled for removal under the contract are discovered, the Contractor shall immediately notify the Engineer or other City representative. No attempt shall be made to excavate, open, or remove such material without written approval.

Clean Air and Water Act

For all contracts and subcontracts exceeding $100,000, the contractor and all subcontractors shall comply with the requirements of the Clean Air Act, as amended, 42 USC 1857 et seq., the Federal Water Pollution Control Act, as amended, 33 USC 1368 et seq., and the regulations of the Environmental Protection Agency with respect thereto, at 40 CFR 15, as amended.

1. Any building, facility or site listed on the EPA List of Violating Facilities as of this contract may not be used in the performance of this contract.

2. The contractor will comply with all the requirements of Section 114 of the Air Act and Section 308 of the Water Act relating to inspection, monitoring, entry, reports and information, as well as other requirements specified in Sections 114 and 308 of the respective Acts, and all regulations and guidelines issued thereunder.

3. Prior to signing this contract, the contractor shall notify the grantee of any communication from EPA indicating that a facility to be used in the performance of this contract is under consideration to be listed on the EPA List of Violating Facilities.

Insurance During Construction

The contractor shall have in effect without interruption from the date of construction commencement until final payment is made and the Project is closed-out pursuant to the terms of this Contract, the following types of insurance. Further, the contractor warrants such insurance coverage shall be written on an "occurrence" basis and will be obtained with the following minimum liability limits:

1. Workers' Compensation Insurance and Employer's Liability Insurance:

(1) State:	Statutory Limits
(2) Employer's Liability:	$100,000 per accident
	$500,000 Disease, Policy Limit
	$100,000 Disease, Each Employee

2. Comprehensive or Commercial General Liability Insurance which shall be endorsed to name the CITY OF MOSCOW. It shall include premises operation, owners and contractor's protective liability, products and completed operations liability, personal injury liability including employee acts, broad form property damage liability and blanket contractual liability, with no exclusion for explosion (X), collapse (C) and underground (U) hazards:

   (1) $1,000,000 Each Occurrence
   (2) $1,000,000 Personal Injury
   (3) $2,000,000 Products/Completed Operations to be maintained for one (1) year following final payment
   (4) $2,000,000 General Aggregate

3. Automobile Liability Insurance which shall be endorsed to name the CITY OF MOSCOW as an additional insured. It shall include for bodily injury and property damage: $1,000,000 Combined Single Limit

Property or Builder's Risk Insurance

If required by the owner, the contractor shall have in effect Property or Builder's Risk Insurance**.** The Property or Builder's Risk Insurance shall include coverage for all direct physical loss, also known as "Special Causes of Loss" in an amount equal to one-hundred percent (100%) of the estimated maximum value of the Project upon completion with the broadest form of "all risk" coverage possible.

Certification of Non-Segregated Facilities

For contracts in excess of $10,000, the contractor certifies that he/she does not maintain or provide for his/her employees any segregated facility at any of his/her establishments, and that he/she does not permit employees to perform their services at any location, under his/her control, where segregated facilities are maintained. He/she certifies further that he/she will not maintain or

provide for employees any segregated facilities at any of his/her establishments, and he/she will not permit employees to perform their services at any location under his/her control where segregated facilities are maintained.

The bidder, offeror, or subcontractor agrees that a breach of this certification is a violation of the Equal Opportunity Clause of this contract. As used in this certification, the term "segregated facilities" means any waiting rooms, work areas, rest rooms and wash rooms, restaurants and other eating areas, time clocks, locker rooms, and other storage or dressing areas, *transportation and housing facilities provided for employees which are segregated by explicit directive or are in fact segregated on the basis of race, color, religion, or national origin, because of habit, local custom, or otherwise. She/he further agrees that (except where she/he has obtained identical certifications from proposed subcontractors for specific time periods) she/he will obtain identical certification from proposed subcontractors prior to the award of subcontracts exceeding $10,000 which are not exempt from the provisions of the Equal Opportunity Clause; that she/he will forward the following notice to such proposed subcontractors (except where proposed subcontractors have submitted identical certifications for specific time periods). *Parking lots, drinking fountains, recreation or entertainment areas.

Data, Patent, and Copyright

The contractor shall hold and save the owner and its officers, agents, servants and employees harmless from liability of any nature or kind, including cost and expenses for, or on account of, any patented or unpatented invention, process, article or appliance manufactured or used in the performance of the contract, including its use by the owner, unless otherwise specifically stipulated in the contract documents.

Access to Records

The grantee, the federal grantor agency, the Comptroller General of the United States, the City of Moscow, or any of their duly authorized representatives, shall have access to any books, documents, papers, and records of the contractor which are directly pertinent to this specific contract, for the purpose of making audit, examination, excerpts, and transcriptions. All required records must be maintained by the contractor for three (3) years after grantee makes final payments and all other pending matters are closed. (24 CFR Part 85.36(i) (10))

Architectural Barrier Act

Any building designed, constructed or altered must be made accessible to persons with disabilities. Exceptions include (1) alterations where access cannot be provided, i.e. roofs, heating systems, water and sewer systems; (2) alterations are not structurally feasible; or (3) where Uniform Federal Accessibility Standards (UFAS) or Americans with Disabilities Act (ADA) requirements cannot be met according to undue hardship criteria. (42 USC 4151 et seq., 24 CFR Part 40 (UFAS), 24 CFR Part 8)

Lead Based Paint

For all residential new construction or rehabilitation, use of lead-based paint on any interior surface, whether accessible or inaccessible, and exterior surfaces readily accessible to children under seven (7) years of age is prohibited. *The surfaces of all existing structures must be inspected.*

If lead based paint is found on any interior surfaces or accessible surfaces, it must be treated and repainted with two (2) coats of non-lead paint; or completely removed; or covered with a suitable material such as gypsum wallboard, plywood or plaster. (42 USC 4801 et seq., 24 CFR Part 35)

Davis-Bacon and Related Acts
See Federal Labor Standards Provisions HUD Form 4010 within this document.

Copeland "Anti-Kickback" Act
See Federal Labor Standards Provisions HUD Form 4010 within this document.

Contract Work Hours and Safety Standards Act, Sections 103 and 107
See Federal Labor Standards Provisions HUD Form 4010 within this document.

Executive Order 11246: Equal Employment Opportunity

During the performance of this contract, the contractor agrees as follows:

1. The contractor will not discriminate against any employee or applicant for employment because of race, color, religion, sex, or national origin. The contractor will take affirmative action to ensure that applicants are employed, and that employees are treated during their employment without regard to their race, color, religion, sex, or national origin. Such action shall include, but not be limited to the following: *employment, upgrading, demotion, or transfer; recruitment or recruitment advertising; layoff or termination; rates of pay or other forms of compensation; and selection for training, including apprenticeship.* The contractor agrees to post in conspicuous places, available to employees and applicants for employment, notices to be provided setting forth the provisions of this nondiscrimination clause.

2. The contractor will, in all solicitations or advertisements for employees placed by or on behalf of the contractor, state that all qualified applicants will receive considerations for employment without regard to race, color, religion, sex, or national origin.

3. The contractor will send to each labor union or representative of workers with which he has a collective bargaining agreement or other contract or understanding, a notice to be provided advising the said labor union or workers' representatives of the contractor's commitments under this section, and shall post copies of the notice in conspicuous places available to employees and applicants for employment.

4. The contractor will comply with all provisions of Executive Order 11246 of September 24, 1965, and of the rules, regulations, and relevant orders of the Secretary of Labor.

5. The contractor will furnish all information and reports required by Executive Order 11246 of September 24, 1965, and by rules, regulations, and orders of the Secretary of Labor, or pursuant thereto, and will permit access to his books, records, and accounts by the administering agency and the Secretary of Labor for purposes of investigation to ascertain compliance with such rules, regulations, and orders.

6. In the event of the contractor's noncompliance with the nondiscrimination clauses of this contract or with any of the said rules, regulations, or orders, this contract may be canceled, terminated, or suspended in whole or part and the contractor may be declared ineligible for

further government contracts or federally assisted construction contracts in accordance with procedures authorized in Executive Order 11246 of September 24, 1965, and such other sanctions may be imposed and remedies invoked as provided in Executive Order 11246 of September 24, 1965, or by rule, regulation, or order of the Secretary of Labor, or as otherwise provided by law.

7. The contractor will include the portion of the sentence immediately preceding paragraph (1) and the provisions of paragraphs (1) through (7) in every subcontract or purchase order unless exempted by rules, regulations, or orders of the Secretary of Labor issued pursuant to section 204 of Executive Order 11246 of September 24, 1965, so that such provisions will be binding upon each subcontractor or vendor. The contractor will take such action with respect to any subcontract or purchase order as the administering agency may direct as a means of enforcing such provisions, including sanctions for noncompliance: Provided, however, that in the event a contractor becomes involved in, or is threatened with, litigation with a subcontractor or vendor as a result of such direction by the administering agency the contractor may request the United States to enter into such litigation to protect the interests of the United States.

8. The contractor agrees that it will assist and cooperate actively with the administering agency and the Secretary of Labor in obtaining the compliance of subcontractors with the equal opportunity clause and the rules, regulations, and relevant orders of the Secretary of Labor, that it will furnish the administering agency and the Secretary of Labor such information as they may require for the supervision of such compliance, and that it will otherwise assist the administering agency in the discharge of the agency's primary responsibility for securing compliance.

9. The contractor further agrees that it will refrain from entering into any contract or contract modification subject to Executive Order 11246 of September 24, 1965, with a contractor debarred from, or who has not demonstrated eligibility for, Government contracts and federally assisted construction contracts pursuant to the Executive order and will carry out such sanctions and penalties for violation of the equal opportunity clause as may be imposed upon contractors and subcontractors by the administering agency or the Secretary of Labor pursuant to Part II, Subpart D of the Executive order. In addition, the contractor agrees that if it fails or refuses to comply with these undertakings, the administering agency may take any or all of the following actions: Cancel, terminate, or suspend in whole or in part this grant (contract, loan, insurance, guarantee); refrain from extending any further assistance to the contractor under the program with respect to which the failure or refund occurred until satisfactory assurance of future compliance has been received from such contractor; and refer the case to the Department of Justice for appropriate legal proceedings.

A. APPLICABILITY

The Project or Program to which the construction work covered by this Contract pertains is being assisted by the United States of America, and the following Federal Labor Standards Provisions are included in this Contract pursuant to the provisions applicable to such Federal assistance.

(1) MINIMUM WAGES

(i) All laborers and mechanics employed or working upon the site of the work will be paid unconditionally and not less often than once a week, and without subsequent deduction or rebate on any account (except such payroll deductions as are permitted by regulations issued by the Secretary of Labor under the Copeland Act (29 CFR Part 3)), the full amount of wages and bona fide fringe benefits (or cash equivalents thereof) due at time of payment, computed at rates not less than those contained in the wage determination of the Secretary of Labor (which is attached hereto and made a part hereof), regardless of any contractual relationship which may be alleged to exist between the contractor and such laborers and mechanics. Contributions made or costs reasonably anticipated for bona fide fringe benefits under Section 1(b)(2) of the Davis-Bacon Act on behalf of laborers or mechanics are considered wages paid to such laborers or mechanics, subject to the provisions of 29 CFR 5.5(a)(1)(iv); also, regular contributions made or costs incurred for more than a weekly period (but not less often than quarterly) under plans, funds, or programs, which cover the particular weekly period, are deemed to be constructively made or incurred during such weekly period.

Such laborers and mechanics shall be paid the appropriate wage rate and fringe benefits on the wage determination for the classification of work actually performed, without regard to skill, except as provided in 29 CFR 5.5(a)(4). Laborers or mechanics performing work in more than one classification may be compensated at the rate specified for each classification for the time actually worked therein: Provided, that the employer's payroll records accurately set forth the time spent in each classification in which work is performed. The wage determination (including any additional classification and wage rates conformed under 29 CFR 5.5(a)(1)(ii) and the Davis-Bacon poster (WH1321)) shall be posted at all times by the contractor and its subcontractors at the site of the work in a prominent and accessible place, where it can be easily seen by the workers.

(ii) Additional Classifications.

(A) Any class of laborers or mechanics which is not listed in the wage determination and which is to be employed under the contract shall be classified in conformance with the wage determination. HUD shall approve an additional classification and wage rate and fringe benefits therefor only when the following criteria have been met:

(1) The work to be performed by the classification requested is not performed by a classification in the wage determination;

(2) The classification is utilized in the area by the construction industry; and

(3) The proposed wage rate, including any bona fide fringe benefits, bears a reasonable relationship to the wage rates contained in the wage determination.

(B) If the contractor, the laborers and mechanics to be employed in the classification (if known), or their representatives, and HUD or its designee agree on the proposed classification and wage rate (including the amount designated for fringe benefits, where appropriate), a report of the action taken shall be sent by HUD or its designee to the Administrator of the Wage and Hour Division ("Administrator"), Employment Standards Administration, U.S. Department of Labor, Washington, D.C. 20210. The Administrator, or an authorized representative, will approve, modify, or disapprove every additional classification action within 30 days of receipt and so advise HUD or its designee or will notify HUD or its designee within the 30-day period that additional time is necessary. (Approved by the Office of Management and Budget ("OMB") under OMB control number 1235-0023.)

(C) In the event the contractor, the laborers or mechanics to be employed in the classification or their representatives, or HUD or its designee do not agree on the proposed classification and wage rate (including the amount designated for fringe benefits, where appropriate), HUD or its designee shall refer the questions, including the views of all interested parties and the recommendation of HUD or its designee, to the Administrator for determination. The Administrator, or an authorized representative, will issue a determination within 30 days of receipt and so advise HUD or its designee or will notify HUD or its designee within the 30-day period that additional time is necessary. (Approved by the Office of Management and Budget under OMB Control Number 1235-0023.)

(D) The wage rate (including fringe benefits, where appropriate) determined pursuant to subparagraphs (1)(ii)(B) or (C) of this paragraph, shall be paid to all workers performing work in the classification under this Contract from the first day on which work is performed in the classification.

(iii) Whenever the minimum wage rate prescribed in the contract for a class of laborers or mechanics includes a fringe benefit which is not expressed as an hourly rate, the contractor shall either pay the benefit as stated in the wage determination or shall pay another bona fide fringe benefit or an hourly cash equivalent thereof.

(iv) If the contractor does not make payments to a trustee or other third person, the contractor may consider as part of the wages of any laborer or mechanic the amount of any costs reasonably anticipated in providing bona fide fringe benefits under a plan or program, Provided, that the Secretary of Labor has found, upon the written request of the contractor, that the applicable standards of the Davis-Bacon Act have been met. The Secretary of Labor may require the contractor to set aside in a separate account assets for the meeting of obligations under the plan or program. (Approved by the Office of Management and Budget under OMB Control Number 1235-0023.)

(2) Withholding. HUD or its designee shall, upon its own action or upon written request of an authorized representative of the U.S. Department of Labor, withhold or cause to be withheld from the contractor under this contract or any other Federal contract with the same prime contractor, or any other Federally-assisted contract subject to Davis-Bacon prevailing wage requirements which is held by the same prime contractor, so much of the accrued payments or advances as may be considered necessary to pay laborers and mechanics, including apprentices, trainees and helpers, employed by the contractor or any subcontractor the full amount of wages required by the contract. In the event of failure to pay any laborer or mechanic, including any apprentice, trainee or helper, employed or working on the site of the work, all or part of the wages required by the contract, HUD or its designee may, after written notice to the contractor, sponsor, applicant, or owner, take such action as may be necessary to cause the suspension of any further payment, advance, or guarantee of funds until such violations have ceased. HUD or its designee may, after written notice to the contractor, disburse such amounts withheld for and on account of the contractor or subcontractor to the respective employees to whom they are due. The Department of Labor shall make such disbursements in the case of direct Davis-Bacon Act contracts.

(3) Payrolls and basic records.

(i) Maintaining Payroll Records. Payrolls and basic records relating thereto shall be maintained by the contractor during the course of the work and preserved for a period of three years thereafter for all laborers and mechanics working at the site of the work. Such records shall contain the name, address, and social security number of each such worker, his or her correct classification(s), hourly rates of wages paid (including rates of contributions or costs anticipated for bona fide fringe benefits or cash equivalents thereof of the types described in Section 1(b)(2)(B) of the Davis-Bacon Act), daily and weekly number of hours worked, deductions made, and actual wages paid.

Whenever the Secretary of Labor has found, under 29 CFR 5.5(a)(1)(iv), that the wages of any laborer or mechanic include the amount of any costs reasonably anticipated in providing benefits under a plan or program described in Section 1(b)(2)(B) of the Davis-Bacon Act, the contractor shall maintain records which show that the commitment to provide such benefits is enforceable, that the plan or program is financially responsible, and that the plan or program has been communicated in writing to the laborers or mechanics affected, and records which show the costs anticipated or the actual cost incurred in providing such benefits.

Contractors employing apprentices or trainees under approved programs shall maintain written evidence of the registration of apprenticeship programs and certification of trainee programs, the registration of the apprentices and trainees, and the ratios and wage rates prescribed in the applicable programs. (Approved by the Office of Management and Budget under OMB Control Numbers 1235-0023 and 1215-0018)

(ii) Certified Payroll Reports.

(A) The contractor shall submit weekly, for each week in which any contract work is performed, a copy of all payrolls to HUD or its designee if the agency is a party to the contract, but if the agency is not such a party, the contractor will submit the payrolls to the applicant sponsor, or owner, as the case may be, for transmission to HUD or its designee. The payrolls submitted shall set out accurately and completely all of the information required to be maintained under 29 CFR 5.5(a)(3)(i), except that full social security numbers and home addresses shall not be included on weekly transmittals. Instead, the payrolls only need to include an individually identifying number for each employee (e.g., the last four digits of the employee's social security number). The required weekly payroll information may be submitted in any form desired. Optional Form WH-347 is available for this purpose from the Wage and Hour Division Web site at **https://www.dol.gov/agencies/whd/forms** or its successor site. The prime contractor is responsible for the submission of copies of payrolls by all subcontractors.

Contractors and subcontractors shall maintain the full social security number and current address of each covered worker, and shall provide them upon request to HUD or its designee if the agency is a party to the contract, but if the agency is not such a party, the contractor will submit the payrolls to the applicant sponsor, or owner, as the case may be, for transmission to HUD or its designee, the contractor, or the Wage and Hour Division of the U.S. Department of Labor for purposes of an investigation or audit of compliance with prevailing wage requirements. It is not a violation of this subparagraph for a prime contractor to require a subcontractor to provide addresses and social security numbers to the prime contractor for its own records, without weekly submission to HUD or its designee. (Approved by the Office of Management and Budget under OMB Control Number 1235-0008.)

(B) Each payroll submitted shall be accompanied by a "Statement of Compliance," signed by the contractor or subcontractor or his or her agent who pays or supervises the payment of the persons employed under the contract and shall certify the following:

(1) That the payroll for the payroll period contains the information required to be provided under 29 CFR 5.5(a)(3)(ii), the appropriate information is being maintained under 29 CFR 5.5(a)(3)(i), and that such information is correct and complete;

(2) That each laborer or mechanic (including each helper, apprentice, and trainee) employed on the contract during the payroll period has been paid the full weekly wages earned, without rebate, either directly or indirectly, and that no deductions have been made either directly or indirectly from the full wages earned, other than permissible deductions as set forth in 29 CFR Part 3;

(3) That each laborer or mechanic has been paid not less than the applicable wage rates and fringe benefits or cash equivalents for the classification of work performed, as specified in the applicable wage determination incorporated into the contract; and

(C) The weekly submission of a properly executed certification set forth on the reverse side of Optional Form WH-347 shall satisfy the requirement for submission of the "Statement of Compliance" required by subparagraph (a)(3)(ii)(b).

(D) The falsification of any of the above certifications may subject the contractor or subcontractor to civil or criminal prosecution under Section 1001 of Title 18 and Section 3729 of Title 31 of the United States Code.

(iii) The contractor or subcontractor shall make the records required under subparagraph (a)(3)(i) available for inspection, copying, or transcription by authorized representatives of HUD or its designee or the U.S. Department of Labor, and shall permit such representatives to interview employees during working hours on the job. If the contractor or subcontractor fails to submit the required records or to make them available, HUD or its designee may, after written notice to the contractor, sponsor, applicant, or owner, take such action as may be necessary to cause the suspension of any further payment, advance, or guarantee of funds. Furthermore, failure to submit the required records upon request or to make such records available may be grounds for debarment action pursuant to 29 CFR 5.12.

(4) Apprentices and Trainees.

(i) Apprentices. Apprentices will be permitted to work at less than the predetermined rate for the work they performed when they are employed pursuant to and individually registered in a bona fide apprenticeship program registered with the U.S. Department of Labor, Employment and Training Administration, Office of Apprenticeship Training, Employer and Labor Services, or with a State Apprenticeship Agency recognized by the Office, or if a person is employed in his or her first 90 days of probationary employment as an apprentice in such an apprenticeship program, who is not individually registered in the program, but who has been certified by the Office of Apprenticeship Training, Employer and Labor Services, or a State Apprenticeship Agency (where appropriate), to be eligible for probationary employment as an apprentice.

The allowable ratio of apprentices to journeymen on the job site in any craft classification shall not be greater than the ratio permitted to the contractor as to the entire work force under the registered program. Any worker listed on a payroll at an apprentice wage rate, who is not registered or otherwise employed as stated above, shall be paid not less than the applicable wage rate on the wage determination for the classification of work actually performed. In addition, any apprentice performing work on the job site in excess of the ratio permitted under the registered program shall be paid not less than the applicable wage rate on the wage determination for the work actually performed. Where a contractor is performing construction on a project in a locality other than that in which its program is registered, the ratios and wage rates (expressed in percentages of the journeyman's hourly rate) specified in the contractor's or subcontractor's registered program shall be observed.

Every apprentice must be paid at not less than the rate specified in the registered program for the apprentice's level of progress, expressed as a percentage of the journeymen hourly rate specified in the applicable wage determination. Apprentices shall be paid fringe benefits in accordance with the provisions of the apprenticeship program.

If the apprenticeship program does not specify fringe benefits, apprentices must be paid the full amount of fringe benefits listed on the wage determination for the applicable classification. If the Administrator determines that a different practice prevails for the applicable apprentice classification, fringe benefits shall be paid in accordance with that determination. In the event the Office of Apprenticeship Training, Employer and Labor Services, or a State Apprenticeship Agency recognized by the Office, withdraws approval of an apprenticeship program, the contractor will no longer be permitted to utilize apprentices at less than the applicable predetermined rate for the work performed until an acceptable program is approved.

(ii) **Trainees.** Except as provided in 29 CFR 5.16, trainees will not be permitted to work at less than the predetermined rate for the work performed, unless they are employed pursuant to and individually registered in a program which has received prior approval, evidenced by formal certification by the U.S. Department of Labor, Employment and Training Administration. The ratio of trainees to journeymen on the job site shall not be greater than permitted under the plan approved by the Employment and Training Administration. Every trainee must be paid at not less than the rate specified in the approved program for the trainee's level of progress, expressed as a percentage of the journeyman hourly rate specified in the applicable wage determination. Trainees shall be paid fringe benefits in accordance with the provisions of the trainee program. If the trainee program does not mention fringe benefits, trainees shall be paid the full amount of fringe benefits listed on the wage determination unless the Administrator of the Wage and Hour Division determines that there is an apprenticeship program associated with the corresponding journeyman wage rate on the wage determination which provides for less than full fringe benefits for apprentices. Any employee listed on the payroll at a trainee rate who is not registered and participating in a training plan approved by the Employment and Training Administration shall be paid not less than the applicable wage rate on the wage determination for the work actually performed.

In addition, any trainee performing work on the job site in excess of the ratio permitted under the registered program shall be paid not less than the applicable wage rate on the wage determination for the work actually performed. In the event the Employment and Training Administration withdraws approval of a training program, the contractor will no longer be permitted to utilize trainees at less than the applicable predetermined rate for the work performed until an acceptable program is approved.

(iii) **Equal employment opportunity.** The utilization of apprentices, trainees, and journeymen under 29 CFR Part 5 shall be in conformity with the equal employment opportunity requirements of Executive Order 11246, as amended, and 29 CFR Part 30.

(5) **Compliance with Copeland Act requirements.** The contractor shall comply with the requirements of 29 CFR Part 3, which are incorporated by reference in this Contract.

(6) **Subcontracts.** The contractor or subcontractor will insert in any subcontracts the clauses contained in subparagraphs (1) through (11) in this paragraph (a) and such other clauses as HUD or its designee may, by appropriate instructions, require, and a copy of the applicable prevailing wage decision, and also a clause requiring the subcontractors to include these clauses in any lower tier subcontracts. The prime contractor shall be responsible for the compliance by any subcontractor or lower tier subcontractor with all the contract clauses in this paragraph.

(7) **Contract termination; debarment.** A breach of the contract clauses in 29 CFR 5.5 may be grounds for termination of the contract and for debarment as a contractor and a subcontractor as provided in 29 CFR 5.12.

(8) **Compliance with Davis-Bacon and Related Act Requirements.** All rulings and interpretations of the Davis-Bacon and Related Acts contained in 29 CFR Parts 1, 3, and 5 are herein incorporated by reference in this Contract.

(9) **Disputes concerning labor standards.** Disputes arising out of the labor standards provisions of this Contract shall not be subject to the general disputes clause of this Contract. Such disputes shall be resolved in accordance with the procedures of the U.S. Department of Labor set forth in 29 CFR Parts 5, 6, and 7. Disputes within the meaning of this clause include disputes between the contractor (or any of its subcontractors) and HUD or its designee, the U.S. Department of Labor, or the employees or their representatives.

(10) **Certification of Eligibility.**

(i) By entering into this Contract, the contractor certifies that neither it (nor he or she) nor any person or firm who has an interest in the contractor's firm is a person or firm ineligible to be awarded Government contracts by virtue of Section 3(a) of the Davis-Bacon Act or 29 CFR 5.12(a)(1) or to be awarded HUD contracts or participate in HUD programs pursuant to 24 CFR Part 24.

(3) Withholding for unpaid wages and liquidated damages. HUD or its designee shall upon its own action or upon written request of an authorized representative of the Department of Labor withhold or cause to be withheld, from any moneys payable on account of work performed by the contractor or subcontractor under any such contract or any other Federal contract with the same prime contract, or any other Federally-assisted contract subject to the Contract Work Hours and Safety Standards Act which is held by the same prime contractor such sums as may be determined to be necessary to satisfy any liabilities of such contractor or subcontractor for unpaid wages and liquidated damages as provided in the clause set forth in subparagraph (2) of this paragraph.

(4) Subcontracts. The contractor or subcontractor shall insert in any subcontracts the clauses set forth in subparagraph (1) through (4) of this paragraph and also a clause requiring the subcontractors to include these clauses in any lower tier subcontracts. The prime contractor shall be responsible for compliance by any subcontractor or lower tier subcontractor with the clauses set forth in subparagraphs (1) through (4) of this paragraph.

C. Health and Safety. The provisions of this paragraph C are applicable where the amount of the prime contract exceeds $100,000.

(1) No laborer or mechanic shall be required to work in surroundings or under working conditions which are unsanitary, hazardous, or dangerous to his health and safety as determined under construction safety and health standards promulgated by the Secretary of Labor by regulation.

(2) The Contractor shall comply with all regulations issued by the Secretary of Labor pursuant to Title 29 Part 1926 and failure to comply may result in imposition of sanctions pursuant to the Contract Work Hours and Safety Standards Act, (Public Law 91-54, 83 Stat 96). 40 USC 3701 et seq.

(3) The contractor shall include the provisions of this paragraph in every subcontract so that such provisions will be binding on each subcontractor. The contractor shall take such action with respect to any subcontractor as the Secretary of Housing and Urban Development or the Secretary of Labor shall direct as a means of enforcing such provisions.

DAVIS BACON WAGE DECISION

The following Davis Bacon Wage Decision(s) apply to all labor activities performed on this project and are included in this Specification document:

CITY OF MOSCOW
EDA AWARD NO. 07-79-07731
SIXTH STREET BRIDGE REPLACEMENT PROJECT
MOSCOW, IDAHO

General Decision Number: ID2022065 02/25/2022

Superseded General Decision Number: ID20210065

State: Idaho

Construction Type: Heavy

Counties: Benewah, Clearwater, and Latah Counties in Idaho

General Decision Number: ID20220082 02/25/2022

Superseded General Decision Number: ID20210082

State: Idaho

Construction Type: Highway

Counties: Latah County in Idaho

"General Decision Number: ID20220065 02/25/2022

Superseded General Decision Number: ID20210065

State: Idaho

Construction Type: Heavy
HEAVY CONSTRUCTION, Including water and sewer line construction and heavy construction projects on treatment plants and industrial (power plants, manufacturing plants, processing plants, etc.) sites

Counties: Benewah, Clearwater and Latah Counties in Idaho.

Note: Contracts subject to the Davis-Bacon Act are generally required to pay at least the applicable minimum wage rate required under Executive Order 14026 or Executive Order 13658. Please note that these Executive Orders apply to covered contracts entered into by the federal government that are subject to the Davis-Bacon Act itself, but do not apply to contracts subject only to the Davis-Bacon Related Acts, including those set forth at 29 CFR 5.1(a)(2)-(60).

If the contract is entered into on or after January 30, 2022, or the contract is renewed or extended (e.g., an option is exercised) on or after January 30, 2022:	. Executive Order 14026 generally applies to the contract. . The contractor must pay all covered workers at least $15.00 per hour (or the applicable wage rate listed on this wage determination, if it is higher) for all hours spent performing on the contract in 2022.
If the contract was awarded on or between January 1, 2015 and January 29, 2022, and the contract is not renewed or extended on or after January 30, 2022:	. Executive Order 13658 generally applies to the contract. . The contractor must pay all covered workers at least $11.25 per hour (or the applicable wage rate listed on this wage determination, if it is higher) for all hours spent performing on that contract in 2022.

The applicable Executive Order minimum wage rate will be adjusted annually. If this contract is covered by one of the Executive Orders and a classification considered necessary for performance of work on the contract does not appear on this wage determination, the contractor must still submit a conformance request.

Additional information on contractor requirements and worker protections under the Executive Orders is available at https://www.dol.gov/agencies/whd/government-contracts.

Modification Number	Publication Date
0	01/07/2022
1	02/18/2022
2	02/25/2022

CARP0001-045 06/01/2020

	Rates	Fringes
CARPENTER (Form Work Only).....	$ 37.12	17.36

ELEC0073-011 01/01/2022

	Rates	Fringes
ELECTRICIAN.....	$ 39.55	19.68

ENGI0370-035 06/01/2018

	Rates	Fringes
POWER EQUIPMENT OPERATOR:		
Backhoe (45,000 gw & under), Cranes (25 tons & under), Drill (8 in bit and over		
GROUP 5.....	$ 28.76	15.95
Backhoe (45,000-110,000 gw), Crane (25-45 tons), Bulldozer (D-6 and over), Grader/Blade, Front-End Loader(4-8 yds), Paver, Scrapers (all)		
GROUP 6.....	$ 29.04	15.95
Backhoe (over 110,000 gw), Cranes (45-85 tons), Heavy Duty Mechanic, Front End Loader (8-10 yds)		
GROUP 7.....	$ 29.31	15.95
Bulldozer (up to D-6)		
GROUP 3.....	$ 28.44	15.95
Cranes (85 tons & over), Front End Loader (10 yds & over)		
GROUP 8.....	$ 30.41	15.95
Front End Loader (under 4 yds)		
GROUP 4.....	$ 28.60	15.95
Rollers (all)		
GROUP 1.....	$ 27.51	15.95

ZONE PAY:

ZONE CENTERS: SPOKANE, PASCO, LEWISTON
ZONE 1: 0-45 Miles: Free
ZONE 2: 45 Miles & Over: $2.00

BOOM PAY (ALL CRANES):

(A): 180'-250': $.50 over scale
(B): over 250': $.80 over scale

IRON0014-006 07/01/2020

	Rates	Fringes
IRONWORKER, REINFORCING AND STRUCTURAL	$ 30.10	34.59

LABO0238-028 06/01/2017

	Rates	Fringes
LABORER (PIPELINE ONLY)		
COMMON	$ 26.28	12.15

LABO0238-031 07/01/2019

	Rates	Fringes
LABORER		
Asphalt Includes Raker, Shoveler, Spreader, and Distributor		
Group 4	$ 28.48	13.00
Flagger		
Group 1A	$ 25.84	13.00

Zone Differential (Add to Zone 1 rates): Zone 2 - $2.00

BASE POINTS: Spokane

Zone 1: 0-45 radius miles from the main post office.
Zone 2: 45 radius miles and over from the main post office

PLAS0072-003 06/01/2021

BENEWAH, BONNER, BOUNDARY, CLEARWATER, IDAHO (NORTH OF THE 46TH PARALLEL), KOOTENAI, LATAH, LEWIS AND NEZ PERCE AND SHOSHONE COUNTIES

ZONE 1:

	Rates	Fringes
CEMENT MASON/CONCRETE FINISHER	$ 32.44	19.56

Zone Differential (Add to Zone 1 rate): Zone 2 - $2.00

BASE POINTS: Spokane, Pasco, Lewiston, Wenatchee

Zone 1: 0-45 radius miles from the main post office

Zone 2: Over 45 radius miles from the main post office

PLUM0044-015 06/01/2019

	Rates	Fringes
PLUMBER		
Zone 1	$ 37.71	23.44

TEAM0690-002 06/01/2020

	Rates	Fringes

```
                                  Rates          Fringes

LABORER
     Asphalt Includes Raker,
     Shoveler, Spreader, and
     Distributor
      Group 4...................$ 28.48            13.00
     Flagger
      Group 1A..................$ 25.84            13.00

Zone Differential (Add to Zone 1 rates):  Zone 2 - $2.00

BASE POINTS:  Spokane

Zone 1:  0-45 radius miles from the main post office.
Zone 2:  45 radius miles and over from the main post office

---------------------------------------------------------------
* PLAS0072-003 06/01/2021

BENEWAH, BONNER, BOUNDARY, CLEARWATER, IDAHO (NORTH OF THE 46TH
PARALLEL), KOOTENAI, LATAH, LEWIS AND NEZ PERCE AND SHOSHONE
COUNTIES


ZONE 1:

                                  Rates          Fringes

CEMENT MASON/CONCRETE FINISHER...$ 32.44            19.56

Zone Differential (Add to Zone 1 rate):  Zone 2 - $2.00

BASE POINTS:  Spokane, Pasco, Lewiston, Wenatchee

Zone 1:  0-45 radius miles from the main post office

Zone 2:  Over 45 radius miles from the main post office

---------------------------------------------------------------
 PLUM0044-015 06/01/2019

                                  Rates          Fringes

PLUMBER
     Zone 1....................$ 37.71            23.44
---------------------------------------------------------------
 TEAM0690-002 06/01/2020

                                  Rates          Fringes

TRUCK DRIVER (DUMP)
     6 yds and under...........$ 28.79            18.15
     over 6 yds................$ 29.23            18.15
---------------------------------------------------------------
  SUID2010-058 08/08/2012

                                  Rates          Fringes

CARPENTER, Excludes Form Work....$ 29.92             5.20

LABORER:  Common or General......$ 23.75             8.98

LABORER:  Landscape..............$ 22.13            11.13
```

TRUCK DRIVER (DUMP)
6 yds and under.....$ 28.79 18.15
over 6 yds.....$ 29.23 18.15

SUID2010-058 08/08/2012

	Rates	Fringes
CARPENTER, Excludes Form Work....	$ 29.92	5.20
LABORER: Common or General.....	$ 23.75	8.98
LABORER: Landscape.....	$ 22.13	11.13
LABORER: Pipelayer.....	$ 17.67	7.26
OPERATOR: Bobcat/Skid Steer/Skid Loader.....	$ 20.97	0.00
OPERATOR: Concrete Batch Plant.....	$ 24.94	11.96
OPERATOR: Forklift.....	$ 21.20	0.00
TRUCK DRIVER: Lowboy Truck.....	$ 21.00	12.10
TRUCK DRIVER: Water Truck.....	$ 24.48	11.67

WELDERS - Receive rate prescribed for craft performing operation to which welding is incidental.

==========

Note: Executive Order (EO) 13706, Establishing Paid Sick Leave for Federal Contractors applies to all contracts subject to the Davis-Bacon Act for which the contract is awarded (and any solicitation was issued) on or after January 1, 2017. If this contract is covered by the EO, the contractor must provide employees with 1 hour of paid sick leave for every 30 hours they work, up to 56 hours of paid sick leave each year. Employees must be permitted to use paid sick leave for their own illness, injury or other health-related needs, including preventive care; to assist a family member (or person who is like family to the employee) who is ill, injured, or has other health-related needs, including preventive care; or for reasons resulting from, or to assist a family member (or person who is like family to the employee) who is a victim of, domestic violence, sexual assault, or stalking. Additional information on contractor requirements and worker protections under the EO is available at https://www.dol.gov/agencies/whd/government-contracts.

Unlisted classifications needed for work not included within the scope of the classifications listed may be added after award only as provided in the labor standards contract clauses (29CFR 5.5 (a) (1) (ii)).

The body of each wage determination lists the classification and wage rates that have been found to be prevailing for the cited type(s) of construction in the area covered by the wage

determination. The classifications are listed in alphabetical order of ""identifiers"" that indicate whether the particular rate is a union rate (current union negotiated rate for local), a survey rate (weighted average rate) or a union average rate (weighted union average rate).

Union Rate Identifiers

A four letter classification abbreviation identifier enclosed in dotted lines beginning with characters other than ""SU"" or ""UAVG"" denotes that the union classification and rate were prevailing for that classification in the survey. Example: PLUM0198-005 07/01/2014. PLUM is an abbreviation identifier of the union which prevailed in the survey for this classification, which in this example would be Plumbers. 0198 indicates the local union number or district council number where applicable, i.e., Plumbers Local 0198. The next number, 005 in the example, is an internal number used in processing the wage determination. 07/01/2014 is the effective date of the most current negotiated rate, which in this example is July 1, 2014.

Union prevailing wage rates are updated to reflect all rate changes in the collective bargaining agreement (CBA) governing this classification and rate.

Survey Rate Identifiers

Classifications listed under the ""SU"" identifier indicate that no one rate prevailed for this classification in the survey and the published rate is derived by computing a weighted average rate based on all the rates reported in the survey for that classification. As this weighted average rate includes all rates reported in the survey, it may include both union and non-union rates. Example: SULA2012-007 5/13/2014. SU indicates the rates are survey rates based on a weighted average calculation of rates and are not majority rates. LA indicates the State of Louisiana. 2012 is the year of survey on which these classifications and rates are based. The next number, 007 in the example, is an internal number used in producing the wage determination. 5/13/2014 indicates the survey completion date for the classifications and rates under that identifier.

Survey wage rates are not updated and remain in effect until a new survey is conducted.

Union Average Rate Identifiers

Classification(s) listed under the UAVG identifier indicate that no single majority rate prevailed for those classifications; however, 100% of the data reported for the classifications was union data. EXAMPLE: UAVG-OH-0010 08/29/2014. UAVG indicates that the rate is a weighted union average rate. OH indicates the state. The next number, 0010 in the example, is an internal number used in producing the wage determination. 08/29/2014 indicates the survey completion date for the classifications and rates under that identifier.

A UAVG rate will be updated once a year, usually in January of each year, to reflect a weighted average of the current negotiated/CBA rate of the union locals from which the rate is based.

WAGE DETERMINATION APPEALS PROCESS

1.) Has there been an initial decision in the matter? This can be:

* an existing published wage determination
* a survey underlying a wage determination
* a Wage and Hour Division letter setting forth a position on a wage determination matter
* a conformance (additional classification and rate) ruling

On survey related matters, initial contact, including requests for summaries of surveys, should be with the Wage and Hour National Office because National Office has responsibility for the Davis-Bacon survey program. If the response from this initial contact is not satisfactory, then the process described in 2.) and 3.) should be followed.

With regard to any other matter not yet ripe for the formal process described here, initial contact should be with the Branch of Construction Wage Determinations. Write to:

Branch of Construction Wage Determinations
Wage and Hour Division
U.S. Department of Labor
200 Constitution Avenue, N.W.
Washington, DC 20210

2.) If the answer to the question in 1.) is yes, then an interested party (those affected by the action) can request review and reconsideration from the Wage and Hour Administrator (See 29 CFR Part 1.8 and 29 CFR Part 7). Write to:

Wage and Hour Administrator
U.S. Department of Labor
200 Constitution Avenue, N.W.
Washington, DC 20210

The request should be accompanied by a full statement of the interested party's position and by any information (wage payment data, project description, area practice material, etc.) that the requestor considers relevant to the issue.

3.) If the decision of the Administrator is not favorable, an interested party may appeal directly to the Administrative Review Board (formerly the Wage Appeals Board). Write to:

Administrative Review Board
U.S. Department of Labor
200 Constitution Avenue, N.W.
Washington, DC 20210

4.) All decisions by the Administrative Review Board are final.

==========

END OF GENERAL DECISIO"

"General Decision Number: ID20220082 02/25/2022

Superseded General Decision Number: ID20210082

State: Idaho

Construction Type: Highway

County: Latah County in Idaho.

HIGHWAY CONSTRUCTION PROJECTS

Note: Contracts subject to the Davis-Bacon Act are generally required to pay at least the applicable minimum wage rate required under Executive Order 14026 or Executive Order 13658. Please note that these Executive Orders apply to covered contracts entered into by the federal government that are subject to the Davis-Bacon Act itself, but do not apply to contracts subject only to the Davis-Bacon Related Acts, including those set forth at 29 CFR 5.1(a)(2)-(60).

If the contract is entered into on or after January 30, 2022, or the contract is renewed or extended (e.g., an option is exercised) on or after January 30, 2022:	. Executive Order 14026 generally applies to the contract. . The contractor must pay all covered workers at least $15.00 per hour (or the applicable wage rate listed on this wage determination, if it is higher) for all hours spent performing on the contract in 2022.
If the contract was awarded on or between January 1, 2015 and January 29, 2022, and the contract is not renewed or extended on or after January 30, 2022:	. Executive Order 13658 generally applies to the contract. . The contractor must pay all covered workers at least $11.25 per hour (or the applicable wage rate listed on this wage determination, if it is higher) for all hours spent performing on that contract in 2022.

The applicable Executive Order minimum wage rate will be adjusted annually. If this contract is covered by one of the Executive Orders and a classification considered necessary for performance of work on the contract does not appear on this wage determination, the contractor must still submit a conformance request.

Additional information on contractor requirements and worker protections under the Executive Orders is available at https://www.dol.gov/agencies/whd/government-contracts.

Modification Number	Publication Date
0	01/07/2022
1	02/25/2022

PLAS0072-001 06/01/2021

ZONE 1:

	Rates	Fringes
CEMENT MASON/CONCRETE FINISHER	$ 32.44	19.56

Zone Differential (Add to Zone 1 rate): Zone 2 - $2.00

BASE POINTS: Spokane, Pasco, Lewiston, Wenatchee

Zone 1: 0-45 radius miles from the main post office

Zone 2: Over 45 radius miles from the main post office

SUID2013-010 06/17/2013

	Rates	Fringes
CARPENTER (Form Work Only)	$ 26.57	8.10
ELECTRICIAN	$ 26.83	11.94
HIGHWAY/PARKING LOT STRIPING:		
Painter	$ 23.80	6.67
LABORER: Asphalt, Includes Raker, Shoveler, Spreader and Distributor	$ 22.86	9.40
LABORER: Common or General	$ 22.92	10.01
LABORER: Concrete Saw (Hand Held/Walk Behind)	$ 23.98	11.05
LABORER: Grade Checker	$ 23.41	10.78
LABORER: Mason Tender - Cement/Concrete	$ 23.52	10.39
OPERATOR: Backhoe/Excavator/Trackhoe	$ 25.97	10.95
OPERATOR: Bobcat/Skid Steer/Skid Loader	$ 25.35	11.55
OPERATOR: Broom/Sweeper	$ 26.82	11.55
OPERATOR: Bulldozer	$ 25.73	11.51
OPERATOR: Crane	$ 27.18	10.97
OPERATOR: Crusher	$ 25.06	9.23
OPERATOR: Grader/Blade	$ 26.00	10.30
OPERATOR: Hydroseeder	$ 24.76	11.51
OPERATOR: Loader	$ 25.76	10.31
OPERATOR: Mechanic	$ 26.00	9.93
OPERATOR: Oiler	$ 25.66	9.23

```
OPERATOR:  Paver  (Asphalt,
Aggregate, and Concrete).........$ 25.66            11.03

OPERATOR:  Roller (Subgrade).....$ 22.24             8.57

OPERATOR:  Roller................$ 25.49            11.55

OPERATOR:  Rotomill..............$ 29.78             4.52

OPERATOR:  Screed................$ 25.71            11.55

TRAFFIC CONTROL:   Flagger.......$ 21.46            10.12

TRAFFIC CONTROL:
Laborer-Cones/
Barricades/Barrels -
Setter/Mover/Sweeper.............$ 22.66            10.90

TRUCK DRIVER:  Dump Truck........$ 23.40            10.75

TRUCK DRIVER:  Lowboy Truck......$ 22.12            13.20

TRUCK DRIVER:  Oil
Distributor Truck................$ 22.54            12.35

TRUCK DRIVER:  Water Truck.......$ 23.12            10.75
-----------------------------------------------------------------

WELDERS - Receive rate prescribed for craft performing
operation to which welding is incidental.

=================================================================

Note: Executive Order (EO) 13706, Establishing Paid Sick Leave
for Federal Contractors applies to all contracts subject to the
Davis-Bacon Act for which the contract is awarded (and any
solicitation was issued) on or after January 1, 2017.  If this
contract is covered by the EO, the contractor must provide
employees with 1 hour of paid sick leave for every 30 hours
they work, up to 56 hours of paid sick leave each year.
Employees must be permitted to use paid sick leave for their
own illness, injury or other health-related needs, including
preventive care; to assist a family member (or person who is
like family to the employee) who is ill, injured, or has other
health-related needs, including preventive care; or for reasons
resulting from, or to assist a family member (or person who is
like family to the employee) who is a victim of, domestic
violence, sexual assault, or stalking.  Additional information
on contractor requirements and worker protections under the EO
is available at
https://www.dol.gov/agencies/whd/government-contracts.

Unlisted classifications needed for work not included within
the scope of the classifications listed may be added after
award only as provided in the labor standards contract clauses
(29CFR 5.5 (a) (1) (ii)).


-----------------------------------------------------------------


The body of each wage determination lists the classification
and wage rates that have been found to be prevailing for the
cited type(s) of construction in the area covered by the wage
```

determination. The classifications are listed in alphabetical order of ""identifiers"" that indicate whether the particular rate is a union rate (current union negotiated rate for local), a survey rate (weighted average rate) or a union average rate (weighted union average rate).

Union Rate Identifiers

A four letter classification abbreviation identifier enclosed in dotted lines beginning with characters other than ""SU"" or ""UAVG"" denotes that the union classification and rate were prevailing for that classification in the survey. Example: PLUM0198-005 07/01/2014. PLUM is an abbreviation identifier of the union which prevailed in the survey for this classification, which in this example would be Plumbers. 0198 indicates the local union number or district council number where applicable, i.e., Plumbers Local 0198. The next number, 005 in the example, is an internal number used in processing the wage determination. 07/01/2014 is the effective date of the most current negotiated rate, which in this example is July 1, 2014.

Union prevailing wage rates are updated to reflect all rate changes in the collective bargaining agreement (CBA) governing this classification and rate.

Survey Rate Identifiers

Classifications listed under the ""SU"" identifier indicate that no one rate prevailed for this classification in the survey and the published rate is derived by computing a weighted average rate based on all the rates reported in the survey for that classification. As this weighted average rate includes all rates reported in the survey, it may include both union and non-union rates. Example: SULA2012-007 5/13/2014. SU indicates the rates are survey rates based on a weighted average calculation of rates and are not majority rates. LA indicates the State of Louisiana. 2012 is the year of survey on which these classifications and rates are based. The next number, 007 in the example, is an internal number used in producing the wage determination. 5/13/2014 indicates the survey completion date for the classifications and rates under that identifier.

Survey wage rates are not updated and remain in effect until a new survey is conducted.

Union Average Rate Identifiers

Classification(s) listed under the UAVG identifier indicate that no single majority rate prevailed for those classifications; however, 100% of the data reported for the classifications was union data. EXAMPLE: UAVG-OH-0010 08/29/2014. UAVG indicates that the rate is a weighted union average rate. OH indicates the state. The next number, 0010 in the example, is an internal number used in producing the wage determination. 08/29/2014 indicates the survey completion date for the classifications and rates under that identifier.

A UAVG rate will be updated once a year, usually in January of each year, to reflect a weighted average of the current negotiated/CBA rate of the union locals from which the rate is based.

WAGE DETERMINATION APPEALS PROCESS

1.) Has there been an initial decision in the matter? This can be:

* an existing published wage determination
* a survey underlying a wage determination
* a Wage and Hour Division letter setting forth a position on a wage determination matter
* a conformance (additional classification and rate) ruling

On survey related matters, initial contact, including requests for summaries of surveys, should be with the Wage and Hour National Office because National Office has responsibility for the Davis-Bacon survey program. If the response from this initial contact is not satisfactory, then the process described in 2.) and 3.) should be followed.

With regard to any other matter not yet ripe for the formal process described here, initial contact should be with the Branch of Construction Wage Determinations. Write to:

Branch of Construction Wage Determinations
Wage and Hour Division
U.S. Department of Labor
200 Constitution Avenue, N.W.
Washington, DC 20210

2.) If the answer to the question in 1.) is yes, then an interested party (those affected by the action) can request review and reconsideration from the Wage and Hour Administrator (See 29 CFR Part 1.8 and 29 CFR Part 7). Write to:

Wage and Hour Administrator
U.S. Department of Labor
200 Constitution Avenue, N.W.
Washington, DC 20210

The request should be accompanied by a full statement of the interested party's position and by any information (wage payment data, project description, area practice material, etc.) that the requestor considers relevant to the issue.

3.) If the decision of the Administrator is not favorable, an interested party may appeal directly to the Administrative Review Board (formerly the Wage Appeals Board). Write to:

Administrative Review Board
U.S. Department of Labor
200 Constitution Avenue, N.W.
Washington, DC 20210

4.) All decisions by the Administrative Review Board are final.

==========

END OF GENERAL DECISIO"

POST THIS ON JOB SITE WITH WAGE DECISION(S)

EMPLOYEE RIGHTS
UNDER THE DAVIS-BACON ACT

FOR LABORERS AND MECHANICS EMPLOYED ON FEDERAL OR FEDERALLY ASSISTED CONSTRUCTION PROJECTS

THE UNITED STATES DEPARTMENT OF LABOR WAGE AND HOUR DIVISION

PREVAILING WAGES	You must be paid not less than the wage rate listed in the Davis-Bacon Wage Decision posted with this Notice for the work you perform.
OVERTIME	You must be paid not less than one and one-half times your basic rate of pay for all hours worked over 40 in a work week. There are few exceptions.
ENFORCEMENT	Contract payments can be withheld to ensure workers receive wages and overtime pay due, and liquidated damages may apply if overtime pay requirements are not met. Davis-Bacon contract clauses allow contract termination and debarment of contractors from future federal contracts for up to three years. A contractor who falsifies certified payroll records or induces wage kickbacks may be subject to civil or criminal prosecution, fines and/or imprisonment.
APPRENTICES	Apprentice rates apply only to apprentices properly registered under approved Federal or State apprenticeship programs.
PROPER PAY	If you do not receive proper pay, or require further information on the applicable wages, contact the Contracting Officer listed below:

or contact the U.S. Department of Labor's Wage and Hour Division.

For additional information:

1-866-4-USWAGE

(1-866-487-9243) TTY: 1-877-889-5627

WHD U.S. Wage and Hour Division

WWW.WAGEHOUR.DOL.GOV

U.S. Department of Labor | Employment Standards Administration | Wage and Hour Division

WH 1321 (Revised April 2009)

DERECHOS DEL EMPLEADO

BAJO LA LEY DAVIS-BACON

PARA OBREROS Y MECÁNICOS EMPLEADOS EN PROYECTOS DE CONSTRUCCIÓN FEDERAL O CON ASISTENCIA FEDERAL

LA SECCIÓN DE HORAS Y SUELDOS DEL DEPARTAMENTO DE TRABAJO DE EEUU

SALARIOS PREVALECIENTES No se le puede pagar menos de la tasa de pago indicada en la Decisión de Salarios Davis-Bacon fijada con este Aviso para el trabajo que Ud. desempeña.

SOBRETIEMPO Se le ha de pagar no menos de tiempo y medio de su tasa básica de pago por todas las horas trabajadas en exceso de 40 en una semana laboral. Existen pocas excepciones.

CUMPLIMIENTO Se pueden retener pagos por contratos para asegurarse que los obreros reciban los salarios y el pago de sobretiempo debidos, y se podría aplicar daños y perjuicios si no se cumple con las exigencias del pago de sobretiempo. Las cláusulas contractuales de Davis-Bacon permiten la terminación y exclusión de contratistas para efectuar futuros contratos federales hasta tres años. El contratista que falsifique los registros certificados de las nóminas de pago o induzca devoluciones de salarios puede ser sujeto a procesamiento civil o criminal, multas y/o encarcelamiento.

APRENDICES Las tasas de aprendices sólo se aplican a aprendices correctamente inscritos bajo programas federales o estatales aprobados.

PAGO APROPIADO Si Ud. no recibe el pago apropiado, o precisa de información adicional sobre los salarios aplicables, póngase en contacto con el Contratista Oficial que aparece abajo:

o póngase en contacto con la Sección de Horas y Sueldos del Departamento de Trabajo de EEUU.

Para obtener información adicional:

1-866-4-USWAGE

(1-866-487-9243) TTY: 1-877-889-5627

WWW.WAGEHOUR.DOL.GOV

WHD U.S. Wage and Hour Division

U.S. Department of Labor | Employment Standards Administration | Wage and Hour Division

WH 1321 SPA (Revised April 2009)

CITY OF MOSCOW
EDA AWARD NO. 07-79-07731
SIXTH STREET BRIDGE REPLACEMENT PROJECT
MOSCOW, IDAHO

See pages 44 through 52 for examples of how to complete payroll forms.

HOW TO COMPLETE PAYROLL FORMS
(Front Section)

For Subcontractors only:
Enter IRS number on first payroll.
Check correct box.

U.S. DEPARTMENT OF LABOR
Wage and Hour Division

PAYROLL

OMB No.: 1235-0008
Expires 04/30/2018

IRS# 24169475

NAME OF CONTRACTOR ☒ OR SUBCONTRACTOR ☐		ADDRESS	
ABC Construction		Moscow, Idaho	
PAYROLL NO.	FOR WEEK ENDING	PROJECT AND LOCATION	PROJECT OR CONTRACT NO.
12 Final	July 9, 2019	City of Moscow	

Payrolls must be numbers sequentially. Write the work "Final" after the number on you last payroll.

Enter days of week work was performed.

RATE OF PAY (Column 6)

- Straight Time: Include fringe amount ONLY IF YOU PAY ALL OR PART IN CASH. (See back of payroll if you pay fringe amount to plan, fund or program.
- Overtime: is calculated at (1 ½ x base) + fringe. Include fringe amount in this column ONLY IF YOU PAY ALL OR PART IN CASH. (See back of payroll if fringe amount paid to plan, etc.)

Specify

- Type of deduction
- Total deduction withheld

(1) NAME AND IDENTIFICATION NUMBER OF EMPLOYEE	NO. OF WITHHOLDING EXEMPTIONS	(3) WORK CLASSIFICATION	OT. OR ST.	(4) DAY AND DATE S 10	M 11	T 12	W 13	T 14	F 15	S 16	(5) TOTAL HOURS	(6) RATE OF PAY	(7) GROSS AMOUNT EARNED	(8) DEDUCTIONS FICA	WITH-HOLDING TAX	State Tax	Medi cal	OTHER	TOTAL DEDUCTIONS	(9) NET WAGES PAID FOR WEEK
				HOURS WORKED EACH DAY																
Carson Wentz #1256	1	Electrician	O						10		10	15.00	555.00	42.00	36.24	4.50	2.60	1.31	86.67	464.33
			S		10	10	10	10			40	10.00								

Identification # required:

- The first time the workers name appears on the payroll.

Fill in the classification EXACTLY as it appears on the determination.

If classification is for a power equipment operator, indicate type, size, horsepower

OVERTIME

- Hours on this project contracted exceeding 40 per week.

STRAIGHT TIME

- Hours worked on this contract up to 40/wk

Enter gross, each deduction and net. Check your figures. Subtract the total amounts withheld from the total gross. The result should equal the total in Column 9.

Section must be fully completed.

List **ALL** deductions subtracted from wages

Write in names of trades benefits

Include type of benefit payment:

Date _____

I, _____ _____
(Name of signatory party) (Title)

do hereby state:

(1) That I pay or supervise the payment of the persons employed by

_____ on the
(Contractor or subcontractor)

_____; that during the payroll period commencing on the
(Building or work)

____ day of _____, 20_____, and ending the 16 day of _____, 20_____, all persons employed on said project have been paid the full weekly wages earned, that no rebates have been or will be made either directly or indirectly to or on behalf of said

_____ from the full
(Contractor or subcontractor)

weekly wages earned by any person and that no deductions have been made either directly or indirectly from the full wages earned by any person, other than permissible deductions as defined in Regulations, Part 3 (29 CFR Subtitle A), issued by the Secretary of Labor under the Copeland Act, as amended (48 Stat. 948, 52 Stat. 108, 72 Stat. 967, 76 Stat. 357; 40 U.S.C. 276c), and described below:

_____

_____

_____

_____

(2) That any payrolls otherwise under this contract required to be submitted for the above period are correct and complete; that the wage rates for laborers or mechanics contained therein are not less than the applicable wage rates contained in any wage determination incorporated into the contract; that the classifications set forth therein for each laborer or mechanic conform with the work he performed.

(3) That any apprentices employed in the above period are duly registered in a bona fide apprenticeship program registered with a State apprenticeship agency recognized by the Bureau of Apprenticeship and Training, United States Department of Labor, or if no such recognized agency exists in a State, are registered with the Bureau of Apprenticeship and Training, United States Department of Labor.

(4) That:

(a) WHERE FRINGE BENEFITS ARE PAID TO APPROVED PLANS, FUNDS, OR PROGRAMS

-In addition to the basic hourly wage rates paid to each laborer or mechanic listed in the above referenced payroll, payments of fringe benefits as listed in the contract have been or will be made to appropriate programs for the benefit of such employees, except as noted in Section 4(c) below.

(b) WHERE FRINGE BENEFITS ARE PAID IN CASH

-Each laborer or mechanic listed in the above referenced payroll has been paid, as indicated on the payroll, an amount not less than the sum of the applicable basic hourly wage rate plus the amount of the required fringe benefits as listed in the contract, except as noted in Section 4(c) below.

(c) EXCEPTIONS

EXCEPTION (CRAFT)	EXPLANATION

REMARKS

NAME AND TITLE	SIGNATURE

THE WILFUL FALSIFICATION OF ANY OF THE ABOVE STATEMENTS MAY SUBJECT THE CONTRACTOR OR SUBCONTRACTOR TO CIVIL OR CRIMINAL PROSECUTION. SEE SECTION 1001 OF TITLE 18 AND SECTION 231 OF TITLE 31 OF THE UNITED STATES CODE.

List exceptions to (a) or (b) by Craft or employees affected. See Payroll Instructions, "Use of Section 4(c) Exceptions," for additional information.

Signature must be in ink, original—no stamps or Xerox. Must be signed by owner or employee authorized by owner to sign.

(a) Required fringe amount paid to approved plans, funds or programs (be sure to include payment for overtime worked). Include with first payroll a copy of the plan, fund or program and documentation that the required amounts were paid into plan, etc.

OR

(b) Required fringe amount paid in cash (above right)

NOTE: If fringe amount is paid in part to approved plan, fund or program and part in cash, see Payroll Instructions, "Use of (4)(c) Exceptions.

HOW TO REPORT: *** Apprentice Wages**
*** Overtime involving contract work hours and safety standards act when employee works on multiple federal projects.**

U.S. DEPARTMENT OF LABOR

Wage and Hour Division

PAYROLL

OMB No.: 1215-0008
Expires 04/30/2018

NAME OF CONTRACTOR ☒ OR SUBCONTRACTOR ☐	ADDRESS
ABC Construction	Moscow, Idaho

PAYROLL NO.	FOR WEEK ENDING	PROJECT AND LOCATION	PROJECT OR CONTRACT NO.
11	July 9, 2019	City of Moscow	

(1) NAME AND IDENTIFICATION NUMBER OF EMPLOYEE	NO. OF WITHHOLDING EXEMPTIONS	(3) WORK CLASSIFICATION	OT. OR ST.	(4) DAY AND DATE S 3	M 4	T 5	W 6	T 7	F 8	S 9	(5) TOTAL HOURS	(6) RATE OF PAY	(7) GROSS AMOUNT EARNED	(8) DEDUCTIONS FICA	WITH-HOLDING TAX	Health	IRA	OTHER (Union Dues)	TOTAL DEDUCTIONS	(9) NET WAGES PAID FOR WEEK
				HOURS WORKED EACH DAY																
Allen Robinson	1	Apprentice Carpenter 1st 6 mo. 40%	O										107.04	7.69	12.60	2.62	1.31	1.26	25.47	117.32
			S		4			8	8		20	5.35								
			O																	
			S																	
Mitchell Trubisky	2	Carpenter	O						8	8		20.07	160.56	34.00	75.00	9.00	6.47	4.20	125.61	342.23
			S									13.38								
			O																	
			S																	

Allen Robinson

- Shows apprentice classification
- Shows step percentage
- Attach copy of registration in approved DOL program with first payroll.

Mitchell Trubisky

- Although Staunton only worked 8 hours on this contract, he is entitled to 8 hours overtime. That is because Staunton worked 40 hours on other federally funded project this week.

HOW TO REPORT: *** Times and wages if employee works more than one classification during the week.**
*** When an employee moves.**

U.S. DEPARTMENT OF LABOR
Wage and Hour Division

PAYROLL

OMB No.: 1235-0008
Expires 04/30/2018

NAME OF CONTRACTOR ☒ OR SUBCONTRACTOR ☐			ADDRESS
ABC Construction			Moscow, Idaho
PAYROLL NO. 11	FOR WEEK ENDING July 9, 2019	PROJECT AND LOCATION City of Moscow	PROJECT OR CONTRACT NO.

(1) NAMEAND IDENTIFICATION NUMBER OF EMPLOYEE	NO. OF WITHHOLDING EXEMPTIONS	(3) WORK CLASSIFICATION	OT. OR ST.	(4) DAY AND DATE S 3	M 4	T 5	W 6	T 7	F 8	S 9	(5) TOTAL HOURS	(6) RATE OF PAY	(7) GROSS AMOUNT EARNED	(8) DEDUCTIONS FICA	WITH-HOLDING TAX	Health	IRA	OTHER (Union Dues)	TOTAL DEDUCTIONS	(9) NET WAGES PAID FOR WEEK
				HOURS WORKED EACH DAY																
Matthew Stafford	1	Carpenter	O										242.56	24.43	74.80	8.35	4.18	5.25	117.01	300.59
			S		8	8	4		3		23	8.92								
Matthew Stafford	1	General Laborer	O						1		1	10.20								
			S				4				4	6.80								
Jamaal Charles	2	Carpenter	O										356.80	20.87	54.50	7.14	3.57	3.20	89.28	267.52
			S		8	8	8	8	8		40	8.92								

Matthew Stafford

- Since Stafford worked at more than one classification during the week:
- Use 2 lines, one for each classification
- Gross amount earned can be totaled and entered on one line

HOW TO REPORT: *** Working Subcontractor**
*** Owner Working with Employees.**

U.S. DEPARTMENT OF LABOR
Wage and Hour Division

PAYROLL

OMB No.: 1235-0008
Expires 04/30/2018

NAME OF CONTRACTOR ☒ OR SUBCONTRACTOR ☐			ADDRESS
ABC Construction			Moscow, Idaho
PAYROLL NO.	FOR WEEK ENDING	PROJECT AND LOCATION	PROJECT OR CONTRACT NO.
1 - Initial	July 9, 2019	City of Moscow	

(1) NAME,AND IDENTIFICATION NUMBER OF EMPLOYEE	NO. OF WITHHOLDING EXEMPTIONS	(3) WORK CLASSIFICATION	OT. OR ST.	(4) DAY AND DATE S 3	M 4	T 5	W 6	T 7	F 8	S 9	(5) TOTAL HOURS	(6) RATE OF PAY	(7) GROSS AMOUNT EARNED	(8) DEDUCTIONS FICA	WITH-HOLDING TAX	Health	IRA	OTHER (Union Dues)	TOTAL DEDUCTIONS	(9) NET WAGES PAID FOR WEEK
				HOURS WORKED EACH DAY																
Walter Payton #4567	2	Carpenter	O										940.00	82.00	75.00	60.			217.00	723.00
			S		8	8	8	8	8		40	23.50								
Travis Kelce #9876	1	Carpenter	O										940.00	82.00	75.00	60.			217.00	723.00
			S		8	8	8	8	8		40	23.50								
Antonio Brown #3456	2	Painter	O											Self Employed Public Works License #05461						
			S																	

- Working Subcontractor
  - Report on payroll of whomever hires him or her

Cam Newton #7890	1	Carpenter	O												Owner					
			S		8	8	8	8	8		40									
Wes Welker #4567	2	Carpenter	O										940.00	82.00	75.00	60.			217.00	723.00
			S		8	8	8	8	8		40	23.50								
Russell Wilson #1065	1	Carpenter	O										940.00	82.00	75.00	60.			217.00	723.00
			S		8	8	8	8	8		40	23.50								

Instructions for Payroll Form WH-347
Grant Funded Projects

General: Form WH-347 has been made available for the convenience of contractors and subcontractors required by their Federal or Federally-aided construction-type contracts and subcontracts to submit weekly payrolls. Properly filled out, this form will satisfy the requirements of Regulations, Parts 3 and 5 (29 C.F.R., Subtitle A), as to payrolls submitted in connection with contracts subject to the Davis-Bacon and related Acts.

While completion of Form WH-347 is optional, it is mandatory for covered contractors and subcontractors performing work on Federally financed or assisted construction contracts to respond to the information collection contained in 29 C.F.R. §§ 3.3,5.5(a). The Copeland Act (40 U.S.C § 3145) requires contractors and subcontractors performing work on Federally financed or assisted construction contracts to "furnish weekly a statement with respect to the wages paid each employee during the preceding week." U.S. Department of Labor (DOL) Regulations at 29 C.F.R. § 5.5 (a)(3)(ii) require contractors to submit weekly a copy of all payrolls to the Federal agency contracting for or financing the construction project, accompanied by a signed "statement of Compliance" indicating that the payrolls are correct and complete and that each laborer or mechanic has been paid not less than the proper Davis-Bacon prevailing wage rate for the work performed. DOL and federal contracting agencies receiving this information review the information to determine that employees have received legally required wages and fringe benefits.

Under the Davis-Bacon and related Acts, the contractor is required to pay not less than prevailing wage, including fringe benefits, as predetermined by the Department of Labor. The contractor's obligation to pay fringe benefits may be met either by payment of the fringe benefits to bona fide benefit plans, funds or programs, or by making payments to the covered workers (laborers and mechanics) as cash in lieu of fringe benefits.

This payroll provides for the contractor to show on the face of the payroll all the monies to each worker, whether as basic rates or as cash in lieu of fringe benefits, and provides for the contractor's representation in the statement of compliance on the payroll (as shown on page two of payroll) that he/she is paying for fringe benefits required by the contract and not paid as cash in lieu of fringe benefits. Detailed instructions concerning the preparation of the payroll follow:

Contractor or Subcontractor: Fill in your firm's name and check appropriate box.

Address: Fill in your firm's address.

Payroll No.: Beginning with the number "1", list the payroll number for the submission

For Week Ending: List the workweek ending date.

Project and Location: Self-explanatory

Project or Contract No.: Self-explanatory

Column 1 – Name and Individual Identifying Number of Worker: Enter each worker's full name and an individual identifying number (e.g., last four digits of worker's social security number) on each weekly payroll submitted.

Column 2 – No. of Withholding Exemptions: This column is merely inserted for the employer's convenience and is not a requirement of Regulations, Part 3 and 5.

Column 3 - Work Classifications: List classification descriptive of work actually performed by each laborer or mechanic. Consult classification and minimum wage schedule set forth in contract specifications. If additional classifications are deemed necessary, see Contracting Officer of Agency representative. An individual may be shown as having worked in more than one classification provided an accurate breakdown or hours worked in each classification is maintained and shown on the submitted payroll by use of separate entries.

Column 4 - Hours Worked: List the day and date and second straight time and overtime hours worked in the applicable boxes. On all contracts subject to the Contract Work Hours Standard Act, enter hours worked in excess of 40 hours a week as "overtime."

Column 5 - Total: Self-explanatory.

Column 6 - Rate of Pay: In the "straight time" box for each worker, list the actual hourly rate paid for straight time worked, plus cash paid in lieu of fringe benefits paid. When recording the straight time hourly rate, any cash paid in lieu of fringe benefits may be shown separately from the basic rate. For example, "12.50/.40" would reflect a $12.25 base hourly rate plus $0.40 for fringe benefits. This is of assistance in correctly computing overtime. See "Fringe Benefits" below. When overtime is worked, show the overtime hourly rate paid plus any cash in lieu of fringe benefits paid in the "overtime" box for each worker; otherwise, you may skip this box. See "Fringe Benefits" below. Payment of not less than time and one-half the basic or regular rate paid is required for overtime under the Contract Work Hours Standard Act of 1962 if the prime contract exceeds $100,000. In addition to paying no less than the predetermined rate for het classification which an individual works, the contractor must pay amounts predetermined as fringe benefits in the wage decision made part of the contract to approved fringe benefit plans, funds or programs or shall pay as cash in lieu of fringe benefits. See "FRINGE BENEFITS" below.

Column 7 – Gross Amount Earned: Enter gross amount earned on this project. If part of a worker's weekly wage was earned on projects other than the project described on this payroll, inter in column 7 first enter amount earned on the Federal or Federally assisted project and then the gross amount earned during the week on all projects, thus "$163.00/$420.00" would reflect eh earnings of a worker who earned $163.00 on a Federally assisted construction project during a week in which $420.00 was earned on all work.

Column 8 - Deductions: Five columns are provided for showing deductions made. If more than five deductions are involved, use the first four columns and show the balance deductions under the fifth "Other" column; show actual total under "Total Deductions" column; and in the attachment to the payroll describe the deduction(s) contained in the "Other" column. All deductions must be in accordance with the provisions of the Copeland Act Regulations, 29 C.F.R., Part 3. If an individual worked on other jobs in addition to this project, show actual deductions from his/her weekly gross wage, and indicate that deductions are based on his gross wages.

Column 9 - Net Wages Paid for Week: Self-explanatory.

Totals – Space has been left at the bottom of the columns so that totals may be shown if the contractor so desires.

Statement Required by Regulations, Parts 3 and 5: While the "statement of compliance" need not be notarized, the statement (on page 2 of the payroll form) is subject to the penalties provided by 18 U.S.C. § 1001, namely, a fine, possible imprisonment of not more than 5 years, or both. Accordingly, the party signing this statement should have knowledge of the facts represented as true.

Items 1 and 2: Space has been provided between items (1) and (2) of the statement for describing any deductions made. If all deductions made are adequately described in the "Deductions" column above, state "See Deductions

column in this payroll." See "FRINGE BENEFITS" below for instructions concerning filling out paragraph 4 of the statement.

Item 4 FRINGE BENEFITS – Contractors who pay all required fringe benefits: If paying all fringe benefits to approved plans, funds, or programs in amounts not less than were determined in the applicable wage decision of the Secretary of Labor, show the basic cash hourly rate and overtime rate paid to each worker on the face of the payroll and check paragraph 4(a) of the statement on page 2 of the WH-347 payroll form to indicate the payment. Note any exceptions in section 4(c).

Contractors who pay no fringe benefits: if not paying all fringe benefits to approved plans, funds, or programs in amounts of at least those that were determined in the applicable wage decision of the Secretary of Labor, pay any remaining fringe benefit amount to each laborer and mechanic and insert in the "straight time" of the "Rate of Pay column of the payroll an amount not less than the predetermined rate for each classification plus the amount of fringe benefits determined for each classification in the application wage decision. Inasmuch as it is not necessary to pay time and a half on cash paid in lieu of fringe benefits, the overtime rate shall not be less than the sum of the basic predetermined rate, plus the half time premium on basic or regular rate, plus the required cash in lieu of fringe benefits at the straight time rate. In addition, check paragraph 4(b) of the statement on page 2 of the payroll form to indicate the payment of fringe benefits in cash directly to the workers. Note any exceptions in section 4 (c).

Use of Section 4(c), Exceptions: Any contractor who is making payment to approved plans, funds, or programs in amounts less than the wage determination requires is obliged to pay the deficiency directly to the covered worker as cash in lieu of fringe benefits. Enter any exceptions to section 4(a) or 4(b) in section 4(c). Enter in the Exception column the craft, and enter in the Explanation column the hourly amount paid each worker as cash in lieu of fringe benefits and the hourly amount paid to plans, funds or programs as fringe benefits. The contractor must pay an amount not less than the predetermined rate plus cash in lieu of fringe benefits as shown in section 4(c) to each such individual for all hours worked (unless otherwise provided by applicable wage determination) on the Federal or Federally assisted project. Enter the rate paid and amount of cash paid in lieu of fringe benefits per hour in column 6 on the payroll. See paragraph on "Contractors who pay no fringe benefits" for computation of overtime rate.

CITY OF MOSCOW
EDA AWARD NO. 07-79-07731
SIXTH STREET BRIDGE REPLACEMENT PROJECT
MOSCOW, IDAHO

See pages 53 through 60 for the forms that need to be completed and returned to the Grants Administrator.

Payroll may be completed by hand on this paper form, or a computerized or online printable version provided all the same information is included, on a weekly basis as stated in the instructions above. The original signed version must be mailed within seven (7) days to the Grants Division, City of Moscow, PO Box 9203, Moscow, ID 83843 or emailed to grantsmanager@ci.moscow.id.us.

U.S. DEPARTMENT OF LABOR

PAYROLL

Wage and Hour Division

(For Contractor's Optional Use: See Instructions at www.dol.gov/whd/forms/wh347instr.htm)

OMB No.: 1215-0149
OMB No. 1235-0008
Expires: 04/30/2018

NAME OF CONTRACTOR ☐ OR SUBCONTRACTOR ☐		ADDRESS	
PAYROLL NO.	FOR WEEK ENDING	PROJECT AND LOCATION	PROJECT OR CONTRACT NO.

(1) NAME, AND EMPLOYEE NUMBER	NO. OF WITHHOLDING EXEMPTIONS	(3) WORK CLASSIFICATION	OT. OR ST.	(4) DAY AND DATE / HOURS WORKED EACH DAY							(5) TOTAL HOURS	(6) RATE OF PAY	(7) GROSS AMOUNT EARNED	(8) DEDUCTIONS						(9) NET WAGES PAID FOR WEEK
														FICA	WITH-HOLDING TAX			OTHER	TOTAL DEDUCTIONS	
			O																	
			S																	
			O																	
			S																	
			O																	
			S																	
			O																	
			S																	
			O																	
			S																	
			O																	
			S																	
			O																	
			S																	
			O																	
			S																	

While completion of Form WH-347 is optional, it is mandatory for covered contractors and subcontractors performing work on Federally financed or assisted construction contracts to respond to the information collection contained in 29 C.F.R. §§ 3.3, 5.5(a). The Copeland Act (40 U.S.C. § 3145) contractors and subcontractors performing work on Federally financed or assisted construction contracts to "furnish weekly a statement with respect to the wages paid each employee during the preceding week." U.S. Department of Labor (DOL) regulations at 29 C.F.R. § 5.5(a)(3)(ii) require contractors to submit weekly a copy of all payrolls to the Federal agency contracting for or financing the construction project, accompanied by a signed "Statement of Compliance" indicating that the payrolls are correct and complete and that each laborer or mechanic has been paid not less than the proper Davis-Bacon prevailing wage rate for the work performed. DOL and federal contracting agencies receiving this information review the information to determine that employees have received legally required wages and fringe benefits. **Public Burden Statement** We estimate that is will take an average of 55 minutes to complete this collection, including time for reviewing instructions, searching existing data sources, gathering and maintaining the data needed, and completing and reviewing the collection of information. If you have any comments regarding these estimates or any other aspect of this collection, including suggestions for reducing this burden, send them to the Administrator, Wage and Hour Division, U.S. Department of Labor, Room S3502, 200 Constitution Avenue, N.W. Washington, D.C. 20210

Date _____

I, _____ _____

(Name of signatory party) (Title)

do hereby state:

(1) That I pay or supervise the payment of the persons employed by

_____ on the

(Contractor or subcontractor)

_____; that during the payroll period commencing on the

(Building or work)

_____ day of _____, 20_____, and ending the _____ day of _____, 20_____, all persons employed on said project have been paid the full weekly wages earned, that no rebates have been or will be made either directly or indirectly to or on behalf of said

_____ from the full

(Contractor or subcontractor)

weekly wages earned by any person and that no deductions have been made either directly or indirectly from the full wages earned by any person, other than permissible deductions as defined in Regulations, Part 3 (29 CFR Subtitle A), issued by the Secretary of Labor under the Copeland Act, as amended (48 Stat. 948, 63 Stat. 108, 72 Stat. 967, 76 Stat. 357; 40 U.S.C. §3145), and described below:

_____

_____

_____

_____

(2) That any payrolls otherwise under this contract required to be submitted for the above period are correct and complete; that the wage rates for laborers or mechanics contained therein are not less than the applicable wage rates contained in any wage determination incorporated into the contract; that the classifications set forth therein for each laborer or mechanic conform with the work he performed.

(3) That any apprentices employed in the above period are duly registered in a bona fide apprenticeship program registered with a State apprenticeship agency recognized by the Bureau of Apprenticeship and Training, United States Department of Labor, or if no such recognized agency exists in a State, are registered with the Bureau of Apprenticeship and Training, United States Department of Labor.

(4) That:

(a) WHERE FRINGE BENEFITS ARE PAID TO APPROVED PLANS, FUNDS, OR PROGRAMS

☐ -In addition to the basic hourly wage rates paid to each laborer or mechanic listed in the above referenced payroll, payments of fringe benefits as listed in the contract have been or will be made to appropriate programs for the benefit of such employees, except as noted in Section 4(c) below.

(b) WHERE FRINGE BENEFITS ARE PAID IN CASH

☐ -Each laborer or mechanic listed in the above referenced payroll has been paid, as indicated on the payroll, an amount not less than the sum of the applicable basic hourly wage rate plus the amount of the required fringe benefits as listed in the contract, except as noted in Section 4(c) below.

(c) EXCEPTIONS

EXCEPTION (CRAFT)	EXPLANATION

REMARKS

NAME AND TITLE	SIGNATURE

THE WILFUL FALSIFICATION OF ANY OF THE ABOVE STATEMENTS MAY SUBJECT THE CONTRACTOR OR SUBCONTRACTOR TO CIVIL OR CRIMINAL PROSECUTION. SEE SECTION 1001 OF TITLE 18 AND SECTION 231 OF TITLE 31 OF THE UNITED STATES CODE.

CITY OF MOSCOW
EDA AWARD NO. 07-79-07731
SIXTH STREET BRIDGE REPLACEMENT PROJECT
MOSCOW, IDAHO

Payroll Signature Authorization Form
Certificate from Contractor/Subcontractor Appointing Officer
or Employee to Supervise Payment of Employees

(I) (We) hereby certify that (I am) (we are) (the prime contractor) (a subcontractor) for _____ *(Specify "General Construction," i.e., plumbing, electrical, etc.)* in connection with construction of the above mentioned Project, and (I) (we) have appointed, whose signature appears below, to supervise the payment of (my) (our) employees beginning *(Date: mm/dd/yyyy)* _____. That he/she is in a position to have knowledge of the facts set forth in the payroll documents and in the Statement of Compliance required by the so-called Kick-Back Statute that he is to execute with (my) (our) full authority and approval until such times as (I) (we) submit to the **Grants Division of the City of Moscow** a new certificate appointing some other person for the purposes hereinabove stated.

Printed Name of Appointee	Name of Contractor/Subcontractor
Signature of Appointee	Signature Authorizing Appointee (see NOTE below)
Title	Title
Date	Date

NOTE: This certificate must be executed by an authorized officer of a corporation or by a member of a partnership, and shall be executed prior to and submitted with the first payroll. Should the appointee be changed, a new certificate must accompany the first payroll for which the new appointee executes a statement of compliance required by the Kick-Back Statute.

Complete the above information and mail or email this original form to the following attention:

Grants Division
City of Moscow
PO Box 9203
Moscow, ID 83843
grantsmanager@ci.moscow.id.us

CITY OF MOSCOW
EDA AWARD NO. 07-79-07731
SIXTH STREET BRIDGE REPLACEMENT PROJECT
MOSCOW, IDAHO

Payroll Overview

Contractor/Subcontractor: _____

Wage Decision Nos. and Modification(s): Idaho, Heavy ID2022065, 02/25/2022
Idaho, Highway ID20220082, 02/25/2022

Name of Payroll Clerk: _____
As Listed on the Payroll Authorization Form

Contact Number for Payroll Clerk _____
(Telephone and Email)

List below the job classification, basic hourly rate, and fringe benefit rate for each job classification of employees you will utilize during the entire project. You must use the job classification from the approved wage decision listed above. If the approved wage decision does not include a job classification needed for the project, an additional job classification must be obtained. The Wage Decision list above is attached.

JOB CLASS	BASIC HOURLY RATE*	FRINGE BENEFIT RATE	OVERTIME RATE
"Power Equipment Operator – Bulldozer"			

*The basic hourly rate includes the zone rate where applicable

Check the applicable box:
1. ☐ All Fringe benefits are paid in cash for all employees.
2. ☐ All Fringe benefits are paid to a plan for all employees
3. ☐ Fringe benefits are paid part in cash and part to a plan for all employees

If Fringe benefits are paid in whole or part to a plan, attach a copy of the:
- Letter from U.S. Department of Labor declaring plan acceptable (if available) **or**;
- Plan(s) and documentation(s) of payment for all funded plans, including but not limited to the Health Insurance Plan, Retirement Plan, Liability Insurance, and Disability Insurance.

CERTIFICATION
The Wage Determination, a Davis-Bacon poster, and an Equal Opportunity poster are posted at the job site.

Complete the above information and mail or email this original form to the following attention:
Grants Division, City of Moscow, PO Box 9203, Moscow ID 83843
grantsmanager@ci.moscow.id.us.

CITY OF MOSCOW
EDA AWARD NO. 07-79-07731
SIXTH STREET BRIDGE REPLACEMENT PROJECT
MOSCOW, IDAHO

Prime Contractor's Certification
Concerning Federal Labor Standards (Davis Bacon)

The undersigned prime contractor, having executed a contract with the local government of the City of Moscow Idaho, in the amount $_____ for the construction of the above-identified project, certifies that:

3. He/she will comply with the Federal Labor Standards Provisions (e.g. Davis-Bacon Act, Copeland Act, Contract Work Hours and Safety Standards Act) and Prevailing Wage Decision(s) are included in the project's contract documents.

   All laborers and mechanics employed on the project will be paid according to the appropriate Prevailing Wage Decision # Heavy ID2022065 02/25/2022 or Highway ID20220082 02/25/2022,

4. Corrections of any infractions of the Federal Labor Standards Provisions, including infractions by any subcontractors and any lower tier subcontractors, is this contractor's responsibility.

5. Neither this contractor, any subcontractor, nor any affiliates, have been declared ineligible to participate in federally funded construction projects.

6. Contractor agrees to obtain and forward all Subcontractors' Certification concerning Federal Labor Standards Provisions and Prevailing Wage requirements to the Local Government or Local Government's representative within ten (10) days after execution of any subcontract.

Prime Contractor	Tax ID Number
Street/Mailing Address	City, State, Zip
Printed Name of Prime Contractor	DUNS Number
Prime Contractor Signature	Date

Complete the above information and mail or email this original form to the following attention:
Grants Division City of Moscow, PO Box 9203, Moscow ID 83843
grantsmanager@ci.moscow.id.us

CITY OF MOSCOW
SIXTH STREET BRIDGE
REPLACEMENT PROJECT
MOSCOW, IDAHO

Subcontractor's Certification
Concerning Federal Labor Standards (Davis Bacon)

The undersigned subcontractor, having executed a contract with _____ (Prime Contractor), in the amount $_____for _____ (Nature of Work i.e. Electrical) for the above-identified project certifies that:

1. He/she will comply with the Federal Labor Standards Provisions (e.g. Davis-Bacon Act, Copeland Act, Contract Work Hours and Safety Standards Act) and Prevailing Wage Decision(s) are included in the project's contract documents.

2. All laborers and mechanics employed on the project will be paid according to the appropriate Prevailing Wage Decision # Heavy ID2022065 02/25/2022 or Highway ID20220082 02/25/2022.

3. Corrections of any infractions of the Federal Labor Standards Provisions, including infractions by any lower tier subcontractors, is this subcontractor's responsibility.

4. Neither this subcontractor, nor any affiliates, have been declared ineligible to participate in federally funded construction projects.

5. This subcontractor agrees to forward a Subcontractor's Certification concerning Federal Labor Standards Provisions and Prevailing Wage requirements to the Local Government's representative within ten (10) days after execution of any subcontract.

_____	_____
Subcontractor	Tax ID Number
_____	_____
Street/Mailing Address	City, State, Zip
_____	_____
Printed Name of Subcontractor	DUNS Number (if available)
_____	_____
Subcontractors Signature	Date

Complete the above information and mail or email this original form to the following attention:
Grants Division, City of Moscow, PO Box 9203, Moscow ID 83843
grantsmanager@ci.moscow.id.us

CITY OF MOSCOW
EDA AWARD NO. 07-79-07731
SIXTH STREET BRIDGE REPLACEMENT PROJECT
MOSCOW, IDAHO

NO WORK PERFORMED

I hereby certify that no work was performed by the undersigned contractor/subcontractor and/or employees on the construction of the above-referenced project during the period dating from _____ 20__ through _____20__.

Contractor/Subcontractor: _____

Signed By: _____

Title: _____

Date: _____

Comments:

_____
_____
_____
_____
_____
_____
_____
_____
_____

****

Questions regarding this form can be emailed to the Grants Division at grantsmanager@ci.moscow.id.us or by phone at 208.883.7035.

Complete the above information and mail or email this original form within seven (7) days of the normal payroll weekending to the following attention:

Grants Division
City of Moscow
PO Box 9203
Moscow ID 83843
grantsmanager@ci.moscow.id.us

CITY OF MOSCOW
EDA AWARD NO. 07-79-07731
SIXTH STREET BRIDGE REPLACEMENT PROJECT
MOSCOW, IDAHO

Employee Voluntary Deduction Authorization Form

I have chosen to enroll in the payroll deduction programs made available on a voluntary basis. I hereby authorize _____my employer, to withhold from my compensation for the programs checked below for the corresponding, one time only deduction program or a continuous deduction program. The consent to participate in these programs is not a condition either for the obtaining of or for the continuation of employment.

One Time Only	Continuous	
☐	☐	Reconciliation of a wage advance – 29 CFR 3.5 § b
☐	☐	Health Insurance plan – 29 CFR 3.5 § d
☐	☐	Retirement Plan (IRA, 401K, or other pension plan) – 29 CFR 3.5 § d
☐	☐	Liability Insurance – 29 CFR 3.5 § d
☐	☐	Disability Insurance – 29 CFR 3.5 § d
☐	☐	Vacation Plan (funded program) – 29 CFR 3.5 § d
☐	☐	Loan Repayment to Credit Unions– 29 CFR 3.5 § f
☐	☐	Union Dues – 29 CFR 3.5 § i
☐	☐	Tool withholding, which is a direct benefit to me – 29 CFR 3.5 § j & k
☐	☐	Other: _____
☐	☐	Other: _____

_____ _____
Printed Name of Employee Signature of Employee

_____
Date

If apprentice is employed please attach the building.

- A copy of the signed collective bargaining agreement for Unions (if applicable) **and**;
- Letter from U.S. Department of Labor declaring plan acceptable (if available) **or**;
- Plan(s) and documentation(s) of payment for all funded plans, including but not limited to the Health Insurance Plan, Retirement Plan, Liability Insurance, and Disability Insurance.

****

Questions regarding this form can be emailed to the Grants Division at grantsmanager@ci.moscow.id.us or by phone at 208.883.7035.

Complete the above information and mail or email this original form and the attachment(s) within seven (7) days of the normal payroll weekending to the following attention:
Grants Division, City of Moscow, PO Box 9203, Moscow ID 83843
grantsmanager@ci.moscow.id.us

City of Moscow
Latah County, Idaho
Sixth Street Crossing Over
Paradise Creek

Appendix A

Geotechnical Engineering Evaluation

THIS PAGE WAS INTENTIONALLY LEFT BLANK

GeoProfessional Innovation.

October 2, 2020
File: MO20057A

Mr. Chris Pettigrew, P.E.
J-U-B Engineers, Inc.
205 South Beechwood Avenue
Boise, Idaho 83709

RE: Geotechnical Engineering Evaluation
6th Street Bridge
Mountain View Road & 6th Street Intersection
Moscow, Idaho

Greetings, Chris.

GeoProfessional Innovation Corporation (GPI) has accomplished the authorized geotechnical engineering evaluation for the 6th Street Bridge project, which will replace the existing bridge crossing Paradise Creek near the 6th Street and Mountain View Road intersection in Moscow, Idaho. Our geotechnical engineering evaluation's purpose was to explore and evaluate subsurface conditions at the planned bridge location, ultimately providing the design team with opinions and recommendations regarding earthwork and bridge foundation design to be used by the bridge structural designer, J-U-B Engineers, Inc. (J-U-B) to prepare design and construction documents. Our services were performed referencing our proposal dated March 11, 2020.

Read and implement this report in its entirety. Portions of this report cannot be relied upon individually without the supporting text of other pertinent sections and associated attachments or appendices. This report's focus is geotechnical aspects of bridge foundation design and construction. Other project aspects such as the bridge situation and layout, stream scour analysis and surface grading and drainage are being designed by J-U-B. This report must not be construed as providing geotechnical recommendations for future roadway improvements.

It is our opinion that the project's success will depend in part on following this report's recommendations, good construction practices and providing the necessary construction monitoring, testing and consultation to verify the construction is completed as recommended. We recommend GPI be retained to provide monitoring, testing and consultation services through construction to provide the design team and the City of Moscow with confidence that the project is constructed according to plans and specifications.

We appreciate the opportunity to serve you on this project. Please do not hesitate to call if you have any questions or comments.

Sincerely,
GPI

Andrew J Abrams, P.E.
Project Engineer

PROFESSIONAL ENGINEER REGISTERED 12481 10/2/20 STATE OF IDAHO ANDREW J. ABRAMS

Travis J Wambeke, P.E.
Principal

AJA/ac

TABLE OF CONTENTS

INTRODUCTION 1
PROJECT UNDERSTANDING 1
Existing Site Conditions *1*
Proposed Construction *1*
SUBSURFACE EVALUATION PROCEDURES 2
SUBSURFACE CONDITIONS 2
LABORATORY TESTING 3
GEOTECHNICAL OPINIONS AND RECOMMENDATIONS 3
Earthwork *3*
Site Preparation 3
Undocumented Fill 4
Excavation Characteristics 4
Wet Soil/Weather Construction 4
Establishing Subgrades 4
Abutment/Roadway Embankment Construction 5
Structural Fill 5
Site Soil Re-Use 6
Required Compaction 6
Compaction Documentation 7
Bridge Abutment Design Recommendations *7*
Abutment Foundations 7
Design Criteria 7
Group Effects 8
Lateral Load Resistance 9
Estimated Settlement 9
Seismicity and IBC Site Class 10
Soil Corrosivity 10
Lateral Pressures and Backfill 10
Site Drainage *11*
ADDITIONAL RECOMMENDED SERVICES 12
Geotechnical Design Continuity *12*
Construction Observation Monitoring *12*
EVALUATION LIMITATIONS 12

REPORT TABLES AND FIGURES

Table 1. Structural Fill Products and Allowable Uses 6
Table 2. Required Compaction for Structural Fill Products 6
Table 3. Grouted Helical Pulldown Micropile (SS-200) Parameters 8
Figure 1. HPM Group Efficiency Factor 9

foundations can be more cost effective than large excavations potentially requiring shoring, dewatering, and other specialized activities.

J-U-B will use the recommendations in this report to develop HPM installation patterns and to design pile caps to satisfy LRFD design criteria for the bridge foundations. J-U-B will accomplish stream scour analysis to design rip-rap protection for abutments thus precluding scour impacts to foundations.

We expect the bridge will have an exposed concrete deck, but could potentially be asphalt-paved. The pavement transition to the existing 6th Street pavement will match existing sections or use the City standard section for collectors. Existing vertical and horizontal grades along 6th Street will be maintained. Abutment wing walls may be required to facilitate grade transitions surrounding the planned structure. Stream flow hydrology, scour analysis, rip-rap design and site surveying will be performed by J-U-B. Existing drainage patterns will be maintained and new storm runoff from the bridge will be directed to the City storm sewer.

SUBSURFACE EVALUATION PROCEDURES

GPI's team accomplished exploration on May 21, 2020 with a trailer mounted GT2400 drill rig equipped with hollow stem augers and standard penetration test (SPT) sampling equipment. Approximate exploration locations are shown on Plate 1. Our exploratory borings extended 51.5 to 61.5 feet below the existing ground surface.

Soil samples from the borings were recovered at approximate 2.5- to 5-foot intervals and SPT N-values were recorded for each sample. A 2-inch-outside-diameter sampler obtained soil samples and SPT N-values. The samplers were advanced 18 inches with a 140-pound hammer falling 30 inches. The SPT N-value was obtained by counting the number of hammer blows required to advance the sampler over the interval from 6 to 18 inches. The blow counts for each 6-inch segment of the sampler are presented on the boring log. The SPT N-values reported on the boring log have not been corrected for overburden pressure or dilation effects on the sampler. In addition to SPT samples, 3-inch-diameter California Modified samplers were used to obtain relatively undisturbed soil samples. Three-inch-diameter sampler blow counts have been normalized to SPT N-values. Samples were collected and returned to GPI's laboratory for further testing.

The soil encountered was visually classified, described, and logged referencing the *Unified Soil Classification System* (USCS). Water levels were identified and recorded in the location explored. The USCS should be used to interpret the terms on the current and previous exploration logs and throughout this report. Exploration logs and the USCS explanation are provided in Appendix A – *USCS Exploration Logs*.

SUBSURFACE CONDITIONS

Asphalt concrete pavement was encountered at the ground surface in boring B-20057A-2 and topsoil described as silt that was brown, soft, and moist was encountered at the ground surface in boring B-20057A-1. Asphalt was measured at 8.5-inches-thick while topsoil was measured to be 1.0-foot-thick. Poorly-graded gravel base course described as gray, dense, and moist was encountered beneath pavement in B-20057A-2 and extended approximately 2.0 feet below the existing ground surface. Beneath gravel base course or topsoil, undocumented fill was encountered, which consisted of silt with varying amounts of sand. Undocumented fill was described as dark brown, soft, and moist to wet, extending approximately 8.5 feet below the existing ground surface. This fill is considered undocumented as no documentation exists regarding its placement, composition, or compaction. Therefore, GPI cannot characterize it as structural fill consistent with City Standards or this report's recommendations via the limited exploration we performed. However, it appears to exist below paved areas and no settlement, rutting, or instability was evident at the pavement surface.

Undocumented Fill

We understand the City has elected to leave undocumented fill in-place beneath the planned approach embankments and roadways. Bridge foundations will bypass fill with HPMs to support loads in native soil at depth. This fill has supported the roadway surface surrounding the existing bridge without significant poor performance for years. Therefore, the risks of leaving fill in-place beneath roadways is relatively low. The following report sections provide our geotechnical recommendations for HPM design and installation beneath the bridge foundations, and for specific subgrade preparation procedures to reduce, but not eliminate undocumented fill settlement risks beneath exterior, non-structural site features.

Excavation Characteristics

The site soil can be excavated using conventional excavation techniques. Bedrock excavation will not be required for the anticipated earthwork on this project. Carefully plan, slope, shore, or brace excavations in accordance with the *Occupational Safety and Health Administration* (OSHA) guidelines. The site soil is classified as "Type C" soil per OSHA regulations when it remains dry, and may be temporarily sloped back 1.5H:1V or flatter. Due to the potential for varying soil and groundwater conditions with depth, the contractor should evaluate each excavation configuration specific to OSHA guidelines and to seek GPI's guidance to create safe and stable excavations. Surcharges from equipment, stockpiles, or material storage must not occur within a horizontal distance of half the height of any excavation.

Plan excavations with water collection points and utilize conventional sumps and pumps to remove nuisance water generated by runoff, seeps, springs, or precipitation. If site soil excavations are not immediately backfilled, they may degrade when exposed to runoff and require over-excavation and replacement with granular fill. Construction activities and excavation backfilling should be performed as rapidly as possible following excavation to reduce the potential for subgrades to degrade under construction traffic.

HPM installations are generally not impacted by the presence of water. However, high water flows during spring months can impact site access for HPM installation and other equipment. Once installed, the foundation alignment will likely need to be dewatered to facilitate forming, reinforcing and concrete placement for pile cap construction. Contractors should be familiar with these conditions and readily have access and contingencies for pumps or the ability to create appropriate cofferdams. The contractor is solely responsible for determining dewatering means, methods, and requirements.

Wet Soil/Weather Construction

Earthwork construction should take place during dry weather conditions. Even then, the on-site soil will be wet to saturated and susceptible to pumping or rutting from heavy loads such as rubber-tired equipment or vehicles any time of the year. If construction commences before soil can dry, after precipitation or during wet periods of the year (typically October through June), earthwork should be completed by low pressure, track-mounted equipment that spread and reduce vehicle load. Design and construction should avoid reliance on reusing the site soil and expect to import *Granular Structural Fill* (SF-2) for all fill placements. During construction, intersect runoff from rainfall or snowfall, and from Paradise Creek, and temporarily divert it to help prevent ponding of water on the project site, specifically in foundations and embankment areas. Always seal, adequately slope, and daylight subgrades to help direct water away from the construction area at the end of each day or before precipitation.

Establishing Subgrades

Following site stripping, HPM installation, and prior to structural fill, or concrete placement, prepare subgrades using one of the methods described below:

Table 1. Structural Fill Products and Allowable Uses

Fill Label	Fill Description	Allowable Use	Material Specifications
SF-2	Granular Structural Fill	• Construction entrances • Over-excavations • Backfilling abutments	• Must meet requirements in ITD Standards *Section 205.02.C – Granular Borrow.* • Soil may contain coarse aggregate locally known as "Shotrock". • Soil may not contain particles larger than 0.7 feet in median diameter.
CA-1	Crushed Aggregate	• SF-2 applications • Pile cap levelling course	• Must meet requirements in ITD Standards *Section 703.04 – Aggregate for Untreated Base, Treated Base, and Road Mix*
--	Unsatisfactory Soil	• No structural applications	• Soil classified as CL, ML, CH, MH, OH, OL or PT may not be used for site structural fill. • Any soil containing more than 3 percent organics by weight or other deleterious substances (wood, metal, plastic, waste, etc.) is unsatisfactory soil. • Site soil may not be used as structural fill for this project

Site Soil Re-Use

Site soil beneath existing pavements and surface vegetation outside of the roadway is expected to require significant processing to facilitate efficient, effective re-use. Due to the relatively small quantities of embankment and backfill required for this project, we recommend site soil not be re-used as structural fill on this project. However, existing asphalt and pavement support aggregate that is demolished as part of construction may be stockpiled on-site and re-used as Granular Structural Fill, provided it meets the requirements in Table 1 above.

Required Compaction

Fill placed for the planned improvements must be compacted to structural fill requirements presented in Table 2 below.

Table 2. Required Compaction for Structural Fill Products

Project Area	Required Structural Fill Product	Compaction Requirement[1]
HPM pile cap subgrades	Existing Site Soil	N/A[2]
All structural fill placement	SF-2, CA-1[3]	95%

Notes:

1. Compaction percentage relative to the maximum dry density referencing ASTM D1557, Modified Proctor testing.
2. Existing fine-grained soil with a PP>2.0 tsf (pocket penetrometer) reading need not be recompacted.
3. *Crushed Aggregate* (CA-1) must be placed and compacted within 1 foot behind abutment and wings walls. Place and compact SF-2 as abutment and wing wall backfill outside 1 foot. See Plate 2 for backfill illustrations.

Table 3. Grouted Helical Pulldown Micropile (SS-200) Parameters

Nominal Axial HPM Capacity (kips)	150
Factored Axial HPM Capacity (kips)	82
Minimum Embedment Depth (feet)	20[1]
Minimum Installation Torque (ft-lb)	15,000
Minimum Grout Column Diameter (inches)	8
Minimum Grouted Bond Length, if required (feet)	50[2]

1. Depth measured from the pile cap base to the trailing helix.
2. If the minimum torque (15,000 ft-lb) is not realized at the minimum embedment depth (20 feet), extend HPM embedment until torque is achieved, or the minimum required grouted column installation length is achieved (50 feet).

HPM's must be installed to achieve the minimum embedment and torque, shown in Table 3 above. If the required installation torque is not achieved at the minimum 20-foot embedment depth, extend HPM's until torque is achieved, or to create a grouted bond length of at least 50-feet below the pile cap, to achieve required vertical load carrying capacity.

From Table 10.5.5.2.5-1 in the *2014 AASHTO LRFD Bridge Design Specifications*, an axial resistance factor of 0.55 must be used on nominal axial compression and uplift HPM capacity. This results in an 82-kip factored HPM capacity at strength limit states. The factored capacity reported above is equivalent to the factored structural HPM capacity reported by A.B. Chance for SS-200 HPMs. Therefore, additional embedment beyond the criteria in Table 3 will not increase capacity. Increased capacity can be achieved by using larger HPM elements. Contact GPI for additional analysis if larger HPM elements are required.

The minimum center-to-center spacing for HPMs shall be at least 2.5 feet. Pile down drag is not expected to be a significant concern at this site, as grade changes are not anticipated to cause settlement in the soil adjacent to the micropiles or beneath the abutment foundations. The HPM group capacity for axial and uplift loading may be taken as the sum of the individual HPM capacities, except as modified due to group effects as outlined in the following section.

Group Effects

HPMs typically have a radius of influence equal to 3 times their diameter from the center-to-center of each grouted column shaft. Per *Section 10.7.3.9* in the *AASHTO Specifications*, if the cap is not in firm contact with the ground and if the soil at the surface is soft, the individual nominal resistance of each pile shall be reduced by a factor, "η". "η" factor is equal to 0.65 for a center-to-center spacing of 2.5 diameters or less, and 1.0 for a center-to-center spacing of 6.0 diameters or greater. For intermediate spacing, the "η" factor should be linearly interpolated see Figure 1, below.

Seismicity and IBC Site Class

We expect the 2018 International Building Code (IBC) will be utilized for project structural design. Section 1613 of the IBC outlines the procedure for evaluating site ground motions and design spectral response accelerations. GPI utilized site soil and geologic data and the project location to estimate earthquake loading criteria at the site referencing Section 1613 of the IBC. Based on our field exploration and knowledge of the upper 100 feet of the soil profile, we recommend a Site Class D be utilized as a basis for structural seismic design.

Liquefaction is a common concern in low-density, fine sand with a potential for saturated conditions. The liquefaction potential rapidly decreases when soil density increases and the percentage of fine-grained soil increases. Due to the stiff consistency and fines content of the soil encountered during exploration, we anticipate the liquefaction potential is relatively low. However, during a significant seismic event, lateral spread on the order of 4 to 6 inches could be realized along the sloping surfaces of the Paradise Creek channel. A site-specific seismic ground response study to provide detailed analysis of lateral spread was not part of our authorized scope. If a more detailed evaluation of liquefaction is desired, please contact us for a revised scope of services.

Soil Corrosivity

Based on laboratory test results, we anticipate the on-site clay with sand maintains a relatively neutral pH at approximately 7.3 and moderately low resistivity at 4,170 ohms-cm. Therefore, underground structures such as HPMs and pile caps may be subject to a moderately corrosive environment. We recommend HPMs maintain complete, hot dip galvanized coating per ASTM A153. Careful selection of material for utility piping must account for some possible loss of wall thickness due to corrosion. Concrete reinforcing steel must maintain appropriate earth and form clearances, at all times referencing the 2018 *International Building Code* (IBC). Reinforcing steel should be positioned with the maximum available clearance.

Lateral Pressures and Backfill

Abutments and pile caps must be backfilled using SF-2 or CA-1 compacted per the Compaction Requirements and Structural Fill report sections. Lateral earth pressures will be realized from retained soil behind the structure as well as any surcharge from traffic, equipment or material placed adjacent to walls. We recommend that lateral earth pressures for abutments and pile caps backfilled with compacted granular fill be estimated using the equivalent fluid weights (EFW) from Table 4.

ADDITIONAL RECOMMENDED SERVICES

Geotechnical Design Continuity

The information contained in this report is based on our knowledge of planned construction as well as our knowledge of site soil conditions. Changes in planned grading, drainage, site configurations, loading conditions, and geometry can significantly alter our opinions and recommendations. Therefore, it is critical GPI provide geotechnical continuity through final planning and design for the project.

Specific to bridge foundation construction, we recommend GPI review final foundation plans and specifications. Our experience is that having consultants from the design team review the construction documents helps reduce the potential for errors, and also reduces costly changes to the contract during construction. This can be especially important for non-standard items such as HPMs. If we are not provided such opportunities, we cannot be responsible for geotechnical-related design or construction errors, omissions, delays, or increased costs that are identified during construction.

Construction Observation Monitoring

We strongly recommend J-U-B or the City of Moscow retain GPI to provide construction monitoring to document the foundation construction activities, to conform that our report recommendations are incorporated into the actual construction. Such observation is an important part of the geotechnical design process and can help reduce the potential for soil engineering- or construction-related errors or omissions. For this project, it is especially important to maintain this geotechnical continuity during HPM installation on the City's behalf, to document geotechnical design criteria are met for this foundation system.

EVALUATION LIMITATIONS

This report is prepared to assist project planning design and construction for the proposed 6th Street Bridge project crossing Paradise Creek immediately west of the Mountain View Road intersection in Moscow, Idaho. The geotechnical findings and opinions provided herein are developed based on the authorized subsurface exploration and laboratory testing, as well as current project understanding. The geotechnical design recommendations are specific to the planned bridge improvements and should not be extrapolated to other future improvements.

GPI's services consist of professional opinions and findings made in accordance with generally accepted geotechnical engineering principles and practices in northern Idaho at the time of this report. The geotechnical recommendations provided herein are based on the premise that appropriate geotechnical consultation during subsequent project phases is implemented and an adequate program of tests and observations will be conducted by GPI during construction to verify compliance with the recommendations and to confirm conditions between exploration locations. This acknowledgment is in lieu of all warranties either express or implied

Plate 1:	Exploration Map
Plate 2:	Abutment Foundation Schematic
Appendix A:	Unified Soil Classification System (USCS) Exploration Logs
Appendix B:	Laboratory Test Results
Appendix C:	Helical Pulldown Micropile Specifications

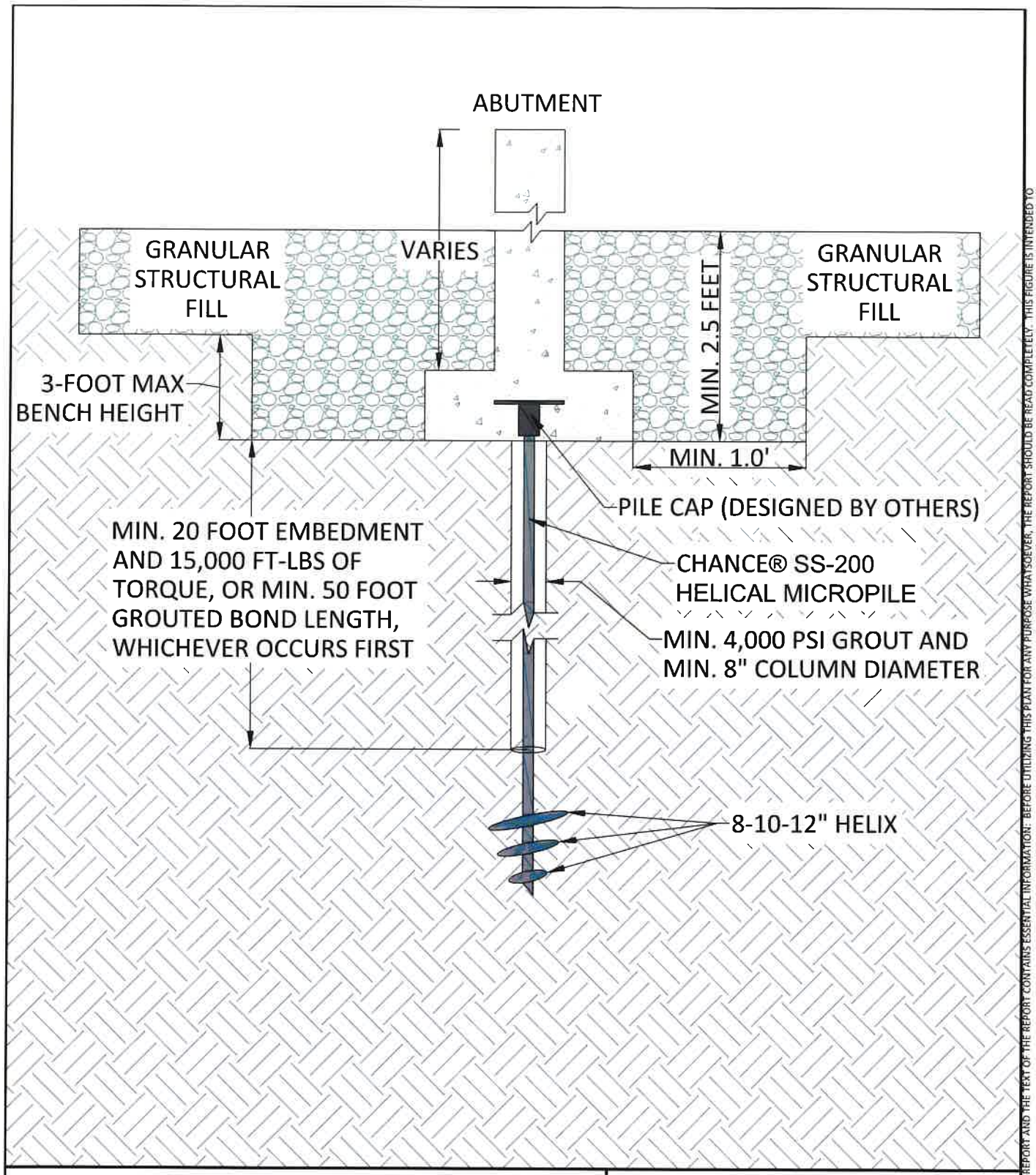

ABUTMENT FOUNDATION/HELICAL PULLDOWN MICROPILE CONSTRUCTION SCHEMATIC
6th Street Bridge
Moscow, Idaho

GeoProfessional Innovation.

NOT TO SCALE

MO20057A	PLATE: 2
DRAWN BY: JBM	CHECKED BY: AJK

THIS FIGURE COMPROMISES A PORTION OF GPI'S REPORT AND THE TEXT OF THE REPORT CONTAINS ESSENTIAL INFORMATION: BEFORE UTILIZING THIS PLAN FOR ANY PURPOSE WHATSOEVER, THE REPORT SHOULD BE READ COMPLETELY. THIS FIGURE IS INTENDED TO HELP VISUALIZE THE INFORMATION PROVIDED BY OTHERS AND NO CHECK OF ACCURACY, CURRENCY, APPROPRIATENESS, ETC., OF INFORMATION PROVIDED BY OTHERS WAS PERFORMED, SINCE SUCH CHECKS WERE NOT PART OF GPI'S SCOPE OF SERVICES.

UNIFIED SOIL CLASSIFICATION SYSTEM

MAJOR DIVISIONS			GRAPHIC SYMBOL	GROUP SYMBOL	TYPICAL NAMES
COARSE GRAINED SOIL	GRAVEL	CLEAN GRAVEL		GW	WELL-GRADED GRAVEL, GRAVEL-SAND MIXTURES.
				GP	POORLY-GRADED GRAVEL, GRAVEL-SAND MIXTURES.
		GRAVEL WITH FINES		GM	SILTY GRAVEL, GRAVEL-SAND-SILT MIXTURES.
				GC	CLAYEY GRAVEL, GRAVEL-SAND-CLAY MIXTURES.
	SAND	CLEAN SAND		SW	WELL-GRADED SAND, GRAVELLY SAND.
				SP	POORLY-GRADED SAND, GRAVELLY SAND.
		SAND WITH FINES		SM	SILTY SAND, SAND-SILT MIXTURES.
				SC	CLAYEY SAND, SAND-CLAY MIXTURES.
FINE GRAINED SOIL	SILT AND CLAY LIQUID LIMIT LESS THAN 50%			ML	INORGANIC SILT, SANDY OR CLAYEY SILT.
				CL	INORGANIC CLAY OF LOW TO MEDIUM PLASTICITY, SANDY OR SILTY CLAY.
				CL-ML	INORGANIC MIXED CLAY AND SILT.
				OL	ORGANIC SILT AND CLAY OF LOW PLASTICITY.
	SILT AND CLAY LIQUID LIMIT GREATER THAN 50%			MH	INORGANIC SILT, MICA- CEOUS SILT, PLASTIC SILT.
				CH	INORGANIC CLAY OF HIGH PLASTICITY, FAT CLAY.
				OH	ORGANIC CLAY OF MEDIUM TO HIGH PLASTICITY.
				PT	PEAT, MUCK AND OTHER HIGHLY ORGANIC SOILS.

BORING LOG SYMBOLS

STANDARD 2 INCH OD SPLIT SPOON SAMPLE

CALIFORNIA MODIFIED 3 INCH OD SPLIT SPOON SAMPLE

ROCK CORE

SHELBY TUBE 3 INCH OD UNDISTURBED SAMPLE

TEST PIT LOG SYMBOLS

GRAB BAG SAMPLE

BG

BULK SAMPLE

BK

RING SAMPLE

RG

GROUNDWATER SYMBOLS

GROUNDWATER AFTER 24 HOURS

GROUNDWATER AT TIME OF EXPLORATION

GROUNDWATER AT THE END OF EXPLORATION

GeoProfessional Innovation®

USCS Description	Depth (ft)	Symbol	Sample Type	SPT Blows Per 6 Inches	SPT N	Dry Density (pcf)	TEST RESULTS: Pocket Penetrometer, TSF ▲ (0.5 1.0 1.5 2.0 2.5 3.0 3.5 4.0 4.5); SPT, N-Value ●; % Passing No. 200 Sieve ★ (PL MC LL, 20 40 60 80)	Remarks (Note: BGS = Below Ground Surface)
ASPHALT CONCRETE (8.5")	0							
BASE COURSE - POORLY GRADED GRAVEL, (GP) gray, dense, moist (21.5")		GP		3 5 5	10			Mimimal recovery at 2.5-feet.
UNDOCUMENTED FILL - SILT, (ML) dark brown, soft, moist to wet		ML		1 1 1	2			Some organics evident in fill to 8.0-feet BGS.
			BK					ASTM D1557: Modified Proctor Maximum Dry Density = 111.0 pcf Optimum Moisture Content = 13.0%
ALLUVIUM - SANDY SILT, (ML) tannish gray orange staining, medium dense, moist to saturated	10	ML		4 3 4	7			
ALLUVIUM - SILTY SAND, (SM) tannish gray orange staining, medium dense, moist to saturated		SM		14 27 24	51	110.3	17.2 H 26	No recovery in Shelby Sampler
				6 7 10	17			
ALLUVIUM - CLAY WITH SAND, (CL) white orange staining, firm, saturated	20	CL		5 5 5	10		20.7	
ALLUVIUM - CLAYEY SAND, (SC) tannish gray orange staining, medium dense, saturated		SC		5 6 7	13	112.1	11.3 25 41	
				10 13 14	27			
				3 6 7	13			
ALLUVIUM - CLAY WITH FINE SAND, (CL) white orange staining, firm, saturated	30	CL		5 7 11	18		22.0 24 35	
ALLUVIUM - CLAYEY SAND, (SC) tannish gray orange staining, medium dense, saturated		SC		8 9 10	19			
ALLUVIUM - CLAY, (CL) white orange staining, firm, saturated	40	CL		3 5 7	12			
ALLUVIUM - CLAYEY SAND, (SC) tannish gray orange staining, medium dense, saturated	50	SC		4 8 12	20			
				10 16 18	34			
Borehole Terminated at 51.5 Feet.								Boring backfilled with bentonite and received an aspalt patch.

Client: J-U-B Engineers, Inc.	**Boring Number:** B-20057A-2	GeoProfessional Innovation.	**EXPLORATORY BORING LOG**
Project: 6th Street Bridge	**Date Drilled:** 05-22-2020		
Drill Rig: GT2400	**Borehole Diameter:** 5"		
Depth to Groundwater: 10'	**Logged By:** AMC		Sheet 7 of 7

GeoProfessional Innovation.

Project No.: MO20057A
Project Name: 6th Street Bridge
Client: J-U-B Engineers, Inc.

Report Date: 7/23/2020

Test Results Summary

Boring	Depth	Lab	Description	In situ	In situ Dry	Max Dry	Optimum	Atterberg Limits		#200 Sieve	Cohesion	Friction Angle		Resistivity	Sulfates
B	(feet)	Number	(U.S.C.S. Classification)	Moisture, %	Density, pcf	Density, pcf	Moisture, %	Liquid Limit	Plasticity Index	Passing, %	psf	Φ, degrees	pH	Ω·cm	ppm
B-20057A-1	20-21.5	PUL20-0087F	Clay with Sand (CL)	-	-	-	-	-	-	-	-	-	7.3	4,170	30.2
B-20057A-1	25.0-26.5	PUL20-0087G	Clay with Sand (CL)	21.5	-	-	-	30	9	-	-	-	-	-	-
B-20057A-1	31.0-31.5	PUL20-0087H	Clay with Sand (CL)	30.2	-	-	-	-	-	90	-	-	-	-	-
B-20057A-2	5.0-6.5	PUL20-0087C	Silt (ML)	-	-	111.0	13.0	-	-	-	-	-	-	-	-
B-20057A-2	10.0-11.5	PUL20-0087A	Sandy Silt (ML)	17.2	110.3	-	-	26	2	54	-	-	-	-	-
B-20057A-2	17.5-19.0	PUL20-0087D	Silty Sand (SM)	20.7	-	-	-	-	-	29	-	-	-	-	-
B-20057A-2	21.0-21.5	PUL20-0087B	Clayey Sand (SC)	11.3	112.1	-	-	41	16	-	246	36.1	-	-	-
B-20057A-2	30.0-31.5	PUL20-0087E	Clay with Fine Sand (CL)	22.0	-	-	-	35	11	-	-	-	-	-	-

Reviewed by: _____

CONSOLIDATION TEST RESULTS
ASTM D 2435 (Method A)

Project: 6th Street Bridge
Client: J-U-B Engineers, Inc.
File Name: MO20057A
Lab Number: PUL20-0087A
Sample Identification: B-20057A-2 @ 10.0 - 11.5 feet BGS
Sample Classification: Sandy Silt (ML)
Sample: In-Situ Tube (Condition: Good)
Date Tested: 5/26/2020 By: JKH
Sample Dry Unit Weight: 110.3 pcf
In-Situ Moisture Content: 17.2%
Atterberg Limits: LL=26, PI=2

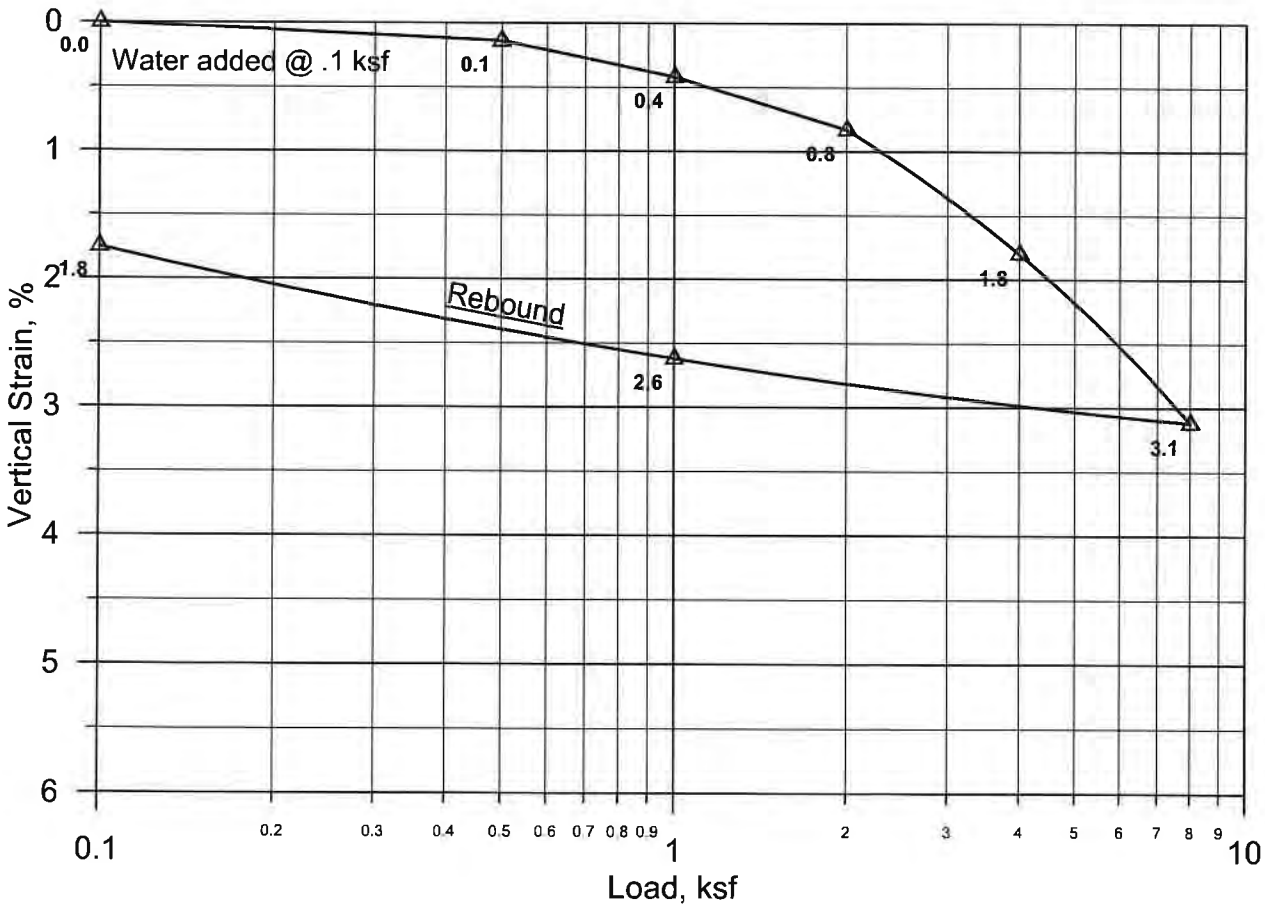

Reviewed By: _____

GeoProfessional Innovation.

APPENDIX C

Helical Pulldown Micropile Specifications

J. *Lead Section:* The first screw pier component installed into the soil, consisting of single or multiple helical plates welded to a central steel shaft. Helical plates provide end-bearing capacity.

K. *Overburden*: Material, natural or placed, that may require cased drilling methods to provide an open borehole to underlying stratigraphy.

L. *Plain Extension:* Central steel shaft without helical plates. It is installed following the installation of the lead section and helical extension. The units are connected with integral couplings and bolts. Plain extensions are used to extend the helical plates beyond the specified minimum depth and into competent load bearing stratum.

M. *Grout*: Portland-cement-based grout pressure-injected or gravity-transferred into the HPM hole after installing reinforcement to direct the load transfer to the surrounding ground along the HPM.

N. *Reinforcement*: The steel component (center bar) of the HPM that accepts and/or resists applied axial compression and tension loadings.

O. *Tolerable Settlement*: Vertical deflections experienced by the HPM group at the connection with the pile cap under the anticipated service loading conditions.

P. *Ultimate Load Transfer Rate*: The estimated ultimate geotechnical grout-to-ground load transfer selected for use in design. Also known as the ultimate bond strength. A factor-of-safety is applied to this value to obtain the allowable load transfer rate shown on the Project Plans.

Q. *Water*: Water used in the grout mixture shall conform to AASHTO T26 and shall be potable, clean and free from substances that may be injurious to cement and steel.

1.4 REFERENCES

A. Standards listed by reference, including revisions by issuing authority, form a part of this specification section to the extent indicated. Standards listed are identified by issuing authority, authority abbreviation, designation number, title, or other designation established by issuing authority. Standards subsequently referenced herein are referred to by issuing authority abbreviation and standard designation. In case of conflict, the particular requirements of this specification shall prevail. The latest publication as of the issue of this specification shall govern, unless indicated otherwise.

1. ASTM International (ASTM):

    a. ASTM A29/A29M Steel Bars, Carbon and Alloy, Hot-Wrought and Cold Finished.
    b. ASTM A36/A36M Structural Steel.
    c. ASTM A53 Pipe, Steel, Black and Hot-Dipped, Zinc-Coated Welded and Seamless.
    d. ASTM A153 Zinc Coating (Hot Dip) on Iron and Steel Hardware.
    e. ASTM A775 Electrostatic Epoxy Coating
    f. ASTM A193/A193M Alloy-Steel and Stainless Steel Bolting Materials for High Temperature Service.
    g. ASTM A252 Welded and Seamless Steel Pipe Piles.
    h. ASTM A320/A320M Alloy-Steel Bolting Materials for Low Temperature Service.
    i. ASTM A500 Cold-Formed Welded and Seamless Carbon Steel Structural Tubing in Rounds and Shapes.
    j. ASTM A572 HSLA Columbium-Vanadium Steels of Structural Quality.
    k. ASTM A618 Hot-Formed Welded and Seamless High-Strength Low-Alloy Structural Tubing.

A. The HPM Contractor shall review the available subsurface information and visit the site to assess the site geometry, equipment access conditions and location of existing structures and above ground facilities, prior to the Bid.

B. The HPM Contractor is responsible for field locating and verifying all utility locations shown on the plans prior to starting the Work. Maintain uninterrupted service for utilities. Notify the General Contractor and the Owner of any utility locations differing from those shown on the plans.

C. Prior to starting HPM construction activity, the HPM Contractor shall inspect the site to observe and document the site's pre-construction condition, existing structures and facilities.

D. During construction, the Contractor shall observe the conditions in the vicinity of the HPM construction site on a daily basis for signs of ground heave or subsidence. Immediately notify the General Contractor and Owner if signs of movement are observed. The Contractor shall immediately suspend or modify operations if ground heave or subsidence is observed, if the HPM structure is adversely affected, or if adjacent structures are damaged from the drilling or grouting. If the Owner or General Contractor determines that the movements require corrective action, the HPM Contractor shall take corrective actions necessary to stop the movement or perform repairs. When due to the HPM Contractor's methods or operations or failure to follow the design specified/approved construction sequence, as determined by the General Contractor or Owner, the costs of providing corrective actions will be borne by the HPM Contractor.

1.6 SUBMITTALS

A. The HPM Contractor shall prepare and submit documentation illustrating qualifications to complete the work specified herein. This documentation shall show:

1. The HPM Contractor and their proposed site personnel are experienced in HPM construction and load testing and have successfully constructed at least 3 projects involving construction of similar or greater capacity than required in these plans and specifications.

2. Brief summaries of 3 completed projects, similar in scope and scale to this project, including a brief project description, HPM installation records and load test results with the project owner's names and current phone numbers.

3. The HPM Contractor shall also submit a personnel list for the quality control representative, drill rig operators and on-site foreman to be assigned to the project.

B. The HPM Contractor shall prepare and submit to the General Contractor and Owner for review of completeness, the following for the HPM system to be constructed:

1. Detailed description of the proposed HPM construction procedure and equipment proposed. This description shall include sufficient detail to allow the Owner's representative to monitor the construction and quality of the HPMs.

2. Proposed start date for HPM installation and testing schedule providing the following:

   a. HPM numbering system

   b. HPM vertical design capacity

   c. Methods for HPM installation and grout placement

   d. Methods and equipment for soil cutting and water removal during drilling

   e. Methods for removing water displaced by grout placement

3. Manufacturer's information, model, size and type of equipment to be used for installing HPMs, with appropriate manufacturer's literature for review. Include detailed description

construction submittals after a complete set has been received. Additional time required due to incomplete or unacceptable submittals shall not be cause for delay or claims for time or expense. The Owner may suspend the Work if the HPM Contractor uses non-approved personnel. If work is suspended, the HPM Contractor shall be fully liable for all resulting costs and no adjustment in Contract Time will result from the suspension. All costs associated with incomplete or unacceptable submittals shall be the responsibility of the HPM Contractor.

1.7 PRE-CONSTRUCTION MEETING

A. A pre-construction meeting will be scheduled by the General Contractor and Owner and held prior to the start of HPM construction. The Owner, General Contractor, HPM Contractor, excavation subcontractor and GPI personnel shall attend the meeting. The pre-construction meeting will be conducted to clarify the construction requirements for the work, to coordinate the construction schedule and activities, and to identify contractual relationships and delineation of responsibilities amongst the prime Contractor and the various Subcontractors – specifically those pertaining to excavation for HPM structures, anticipated subsurface conditions, HPM installation and testing, HPM structure survey control, site drainage control, and quality assurance.

1.8 QUALITY ASSURANCE

A. Refer to Section 3.9 Grout Testing for field grout quality control.

B. All HPM installations and testing shall be observed full-time by the Owner's representative. HPM lengths may be adjusted in the field to accommodate subsurface soil conditions encountered, however additional tests may also be required for quality assurance purposes on modified configurations and the minimum torque and length achieved.

C. Conduct layout work for each HPM before excavation. Measure and report actual measurements for each HPM's horizontal axial location, diameter, bottom and top elevations, deviations for specified tolerances and other data required. Record and maintain information pertinent to each HPM and cooperate with testing and inspection personnel to provide data for required reports

2.0 PRODUCTS

2.1 GENERAL

A. The following product specifications are intended to provide general standards that exist in the area and for materials readily available for this project. Design will designate actual material requirements for HPMs referencing the minimum standards below. The HPM Contractor shall furnish materials new and without defects. Defective materials shall be replaced at no additional cost. Materials for HPMs shall consist of the following:

1. Central Steel Shaft:

   a. The central steel shaft, consisting of lead sections, helical extensions, and plain extensions, shall be Type SS-200 as manufactured by the A. B. Chance Company (Centralia, MO).

   b. *SS-200 2.0" Material*: Shall be hot rolled Round-Cornered-Square (RCS) solid steel bars meeting the dimensional and workmanship requirements of ASTM A29. The bar shall be High Strength Low Alloy (HSLA), low to medium carbon steel grade with improved strength due to fine grain size.

   c. Torsional strength rating: SS-200 = 16,000 ft-lb

   d. Minimum yield strength = 90 ksi

2. Helical Bearing Plate:

3.0 EXECUTION

3.1 SITE DRAINAGE CONTROL

A. The HPM Contractor shall control and properly dispose of drill fluid and construction related waste, including excess grout, in accordance with all applicable local codes and regulations. Provide positive control and discharge of all surface water that will affect construction of the HPM installation. Maintain all pipes or conduits used to control surface water during construction. Repair damage caused by surface water at no additional cost. Upon substantially completing the work, remove surface water control pipes or conduits from the site. Alternatively, with the approval of the General Contractor and Owner, pipes or conduits that are left in place may be fully grouted and abandoned or left in a way that protects the structure and all adjacent facilities from migration of fines through the pipe or conduit and potential ground loss.

3.2 EXCAVATION

A. The HPM Contractor shall coordinate the work and the excavation so the HPM structures are safely constructed. Perform the HPM construction and related excavation in accordance with the Plans and approved submittals.

3.3 HPM ALLOWABLE CONSTRUCTION TOLERANCES

A. Centerline of HPMs shall not be more than 1 inch from horizontal plan location.

B. HPMs shall be plumb within 2 percent of planned alignment.

C. Top elevation of HPMs shall be plus or minus 1 inch maximum from vertical elevations indicated on the plans.

3.4 SITE CONDITIONS

A. Prior to commencing HPM installation, the HPM Contractor shall inspect the work of all other trades and verify that all said work is completed to the point where HPMs may commence without restriction.

B. In the event of a discrepancy, the HPM Contractor shall notify the General Contractor and the Owner. The HPM Contractor shall not proceed with HPM installation in areas of discrepancies until said discrepancies have been resolved. All costs associated with unresolved discrepancies shall be the responsibility of the General Contractor.

3.5 INSTALLATION EQUIPMENT

A. Shall be rotary type, hydraulic power-driven torque motor with clockwise and counter-clockwise rotation capabilities. The torque motor shall be capable of continuous adjustment to revolutions per minute (RPM's) during installation. Percussion drilling equipment shall not be permitted. The torque motor shall have torque capacity 15% greater than the torsional strength rating of the central steel shaft to be installed.

B. Equipment shall be capable of applying adequate down pressure (crowd) and torque simultaneously to suit project soil conditions and load requirements. The equipment shall be capable of continuous position adjustment to maintain proper HPM alignment.

conditions and grout column diameter. The grout shall be placed in reservoir immediately prior to advancing the first LDP into the soil. The grout volume contained in the reservoir shall be maintained at a level sufficient to maintain positive hydrostatic pressure on the grout column.

3. Grout placement shall continue until the minimum grout column length has been achieved as shown on the working drawings. Volume measurements shall be taken throughout the installation in order to determine the actual grout column diameter.

4. Unless approved design designates otherwise, neat cement mixture with a minimum 3-day compression strength of 2,500 psi and a minimum 28-day compressive strength of 4,000 psi per AASHTO T106/ASTM C109. Limit water-soluble chloride-ion content in hardened concrete to 0.15 percent by weight of cement. Grout minimum design strength shall be verified prior to being loaded.

3.8 TERMINATION CRITERIA

A. The torque as measured during the installation shall not exceed the torsional strength rating of the central steel shaft.

B. The minimum installation torque is 15,000 foot-pounds. The minimum installation depth is 20-feet, below the plie cap bearing elevation to the trailing helix. If the required torque is not achieved at the minimum 20-foot embedment depth, extend HPM's until torque is achieved, or to create a grouted bond length of 50-feet below the pile cap base. HPMs must bear in undisturbed native soil. Both torque and overall length criteria shall be satisfied prior to terminating the HPM, except as described below:

1. If the torsional strength rating of the central steel shaft and/or installation equipment has been reached prior to achieving the minimum overall depth required, the Contractor shall remove the HPM and install a new HPM to achieve the required installation conditions. Alternative configurations shall be subject to review and acceptance of the Owner. If re-installing in the same location, the top-most helix of the new HPM shall be terminated at least 5 feet beyond the terminating depth of the original HPM.

2. If the minimum 15,000 ft-lb installation torque is not achieved at the minimum specified length, the Contractor may extend the HPM to a depth sufficient to achieve the minimum required installation torque, or to refusal on suitable bearing material. Pier refusal on suitable bearing material must be evaluated by GPI, and is defined as less than 1-inch vertical pier penetration after 5 minutes of consistent drilling and downward force.

3. If the HPM is refused or deflected by a subsurface obstruction which is not considered suitable bearing material by GPI, the installation shall be terminated and the HPM removed. The obstruction shall be removed, if feasible, and the HPM re-installed. If obstruction can't be removed, the HPM shall be installed at an adjacent location within 1 foot of the previous location, subject to review and acceptance of the General Contractor and Owner.

3.9 GROUT TESTING

A. During production, HPM grout shall be tested by the Owner for compressive strength referencing AASHTO T106/ASTM C109 at a frequency of no less than one set of 3, grout samples each day of operation. The compressive strength shall be the average of the 3 samples, tested at 28 days.

3.10 AXIAL LOAD TESTS

A. 1 performance axial load test in compression shall be conducted on production HPMs at the onset of construction. The performance test shall be conducted in compression to 150 percent

Table 1: Performance Axial Load Testing Schedule

Load Increment	Hold Time (min)	Time of Reading
0.00DL	0	None
0.25DL	5	5
0.50DL	5	5
0.75DL	5	5
1.00DL	5	5
1.25DL	5	5
1.50DL	60	1
		2
		3
		4
		5
		6
		10
		20
		30
		40
		50
		60

H. If a HPM fails load testing due to installation difficulties, modify the construction procedure and reinstall. Modifications may include installing replacement HPMs, modifying the installation methods, increasing the bond length, or changing the HPM type. General Contractor and Owner approval is required for modification that requires changes to the installation and testing procedures. Any modifications of design or construction procedures shall be at the Contractor's expense. Additional testing will be required if a performance test HPM fails and this testing shall be at the HPM Contractor's expense.

I. The General Contractor and Owner reserve the right to require additional load tests during production due to variable conditions, unusual soil profiles or changed installation means, methods, or configurations. Additional performance tests due to changed means, methods or configurations will be paid by the General Contractor unless previous performance tests failed.

J. If HPM performance tests pass, the HPM can be used as a production HPM.

3.11 HPM INSTALLATION RECORDS

A. HPM Contractor shall prepare and submit to the General Contractor and Owner full-length installation records for each HPM installed. The records shall be submitted within the same

City of Moscow
Latah County, Idaho
Sixth Street Crossing Over Paradise Creek

Appendix B

Moscow Standard Plans and Specifications

THIS PAGE WAS INTENTIONALLY LEFT BLANK

PUBLIC WORKS DEPARTMENT

ENGINEERING DIVISION

STANDARD CONSTRUCTION SPECIFICTATIONS

Modified for the City of Moscow Sixth Street Crossing Over Paradise Creek Project

Construction Standards – All work shall be completed in according to the project drawings and specifications. The project specifications supplement the City of Moscow Standard Construction Specifications and Drawings. In case of conflict, the most stringent requirement applies.

Idaho Standard Public Works Construction (ISPWC) Specifications and Details also apply where specifications or details are not provided in the project drawings and specifications or the City of Moscow Standards.

CITY ENGINEER:
SCOTT BONTRAGER, P.E.

TABLE OF CONTENTS

ENGINEERING SPECIFICATIONS.....1
ES-1. SCOPE OF WORK.....1
ES-2. TRAFFIC CONTROL/R.O.W USE PERMITS.....1
ES-3. MATERIALS.....3
ES-4. REMOVALS AND DISPOSALS.....3
ES-5. EARTHWORK.....4
ES-6. SUBGRADE SEPARATION GEOTEXTILES.....5
ES-7. CRUSHED ROCK BASE.....6
ES-8. SOFT SPOT REPAIR.....9
ES-9. WATERING.....9
ES-10. WEIGHING.....10
ES-11. CONCRETE.....10
ES-12. CONCRETE CONSTRUCTION REQUIREMENTS.....12
ES-13. CONCRETE CURB.....16
ES-14. CONCRETE SIDEWALK.....18
ES-15. SUPERPAVE HOT MIX ASPHALT.....20
ES-16 CEMENT CONCRETE PAVEMENT.....22
ES-17. ADJUSTMENT OF GATE VALVE BOXES, MONUMENTS, CATCH BASINS, CATCH INLETS, AND MANHOLES.....27
ES-18. MANHOLES AND CATCH BASINS.....28
ES-19. TRENCH EXCAVATION AND BACKFILL.....30
ES-20. PIPE.....38
ES-21 GATE VALVES AND VALVE BOXES.....46
ES-22. FIRE HYDRANTS.....47
ES-23. STORM AND SANITARY CONNECTIONS.....50
ES-24. STREET / ALLEY CUT REPAIR.....52
ES-25. EROSION AND SEDIMENT CONTROL.....52
ES-26 STORMWATER RUNOFF CONTROL.....52
ES-27. IMPORTED TOPSOIL.....52
ES-28 SEEDING, SOD, AND INFIELD SURFACE REPAIR.....53
ES-29. TREE TRIMMING.....54
ES-30. INSPECTION.....54
ES-31. WORKMANSHIP AND CLEAN UP.....55
ES-32. MOBILIZATION.....55

ENGINEERING SPECIFICATIONS

ES-1. SCOPE OF WORK

The scope of work for the project is as set forth in the project specific plans and specifications.

The intent of the contract is to provide for the construction and completion in every detail of the work described.

The City reserves the right to make, at any time during the progress of the work, such changes in quantities and such alterations in the scope of work as are necessary to satisfactorily complete the project and the Contractor shall perform the work as altered. Compensation for change in scope of work will be in accordance with the project specific contract documents.

Unless otherwise noted, all labor, materials, and equipment necessary for the execution and completion of the work shall be furnished by the Contractor.

ES-2. TRAFFIC CONTROL/R.O.W USE PERMITS

2.1 Traffic Control

A. The Contractor shall obey all rules, laws, ordinances and regulations of all traffic regulatory authorities having jurisdiction regarding the closing or barricading of public streets. Work shall not begin until the proper permits have been acquired and all required traffic control devices are in place.

B. **Prior to commencement of work, the Contractor shall submit to the Engineer for review, Traffic Control Plan(s) created by an *ATSSA or ESC certified Traffic Control Supervisor.* The plan shall be consistent with requirements detailed in the current edition of the Manual on Uniform Traffic Control Devices (MUTCD) and shall include identification of detour routes for pedestrians. All traffic control devices shall be MUTCD approved, and installed and maintained by *ATSSA or ESC certified Traffic Control Technicians.* In the event where flagging is required to control traffic flow around a work zone, all flaggers shall have a *current ATSSA or ESC flagging card.***

Traffic control plans for work within State of Idaho highway right-of-way must also be approved by the Idaho Transportation Department.

C. The work shall be carried out so as to cause a minimum of dislocation of normal commercial pursuits. Traffic must be kept open on roads and/or streets where no detour is possible. The Contractor shall, in addition to other requirements contained herein, without further notification or other order, provide, erect, and maintain at all times during the progress or temporary suspension of the work,

barricades, fences, signs, flaggers, or other protection in accordance with the most current edition of the "Manual on Uniform Traffic Control Devices" and shall provide, keep, and maintain such danger lights, signals, and flaggers, as may be necessary or ordered by the Engineer and/or traffic regulatory authorities having jurisdiction to ensure the safety of the public as well as those engaged in connection with the work. All barricades and obstructions shall be protected by signal lights which shall be suitably distributed across and along the roadway and which shall be kept burning from one hour before sunset until one hour after sunrise and at other times as vision is obscured by fog, smoke, or dust.

D. The Contractor shall promptly reopen streets and driveways to the public after construction work requiring their closure is completed, and all safety issues have been resolved. Local traffic shall be provided access to private properties at all times, except during necessary stages of construction when it is impractical to carry on the construction and maintain traffic simultaneously, such as for the placing of hot mix asphalt pavement, placing and curing of Portland cement pavement, and deep sewer excavation which prohibits safe travel of vehicular traffic. No private driveway may be closed except as provided here-in, or unless permission is given the Contractor by the owner of the property affected. Emergency traffic such as police, fire, and disaster units shall be provided reasonable access at all times. The Contractor shall be solely responsible for any damages which may result from failure to provide such reasonable access.

E. The Contractor shall take every precaution to protect pedestrian, bicycle and vehicular traffic. Whenever, in the opinion of the Engineer, the Contractor has not provided sufficient or proper safety precautions and safeguards, he/she shall do so immediately, and to whatever extent the Engineer directs at no additional cost to the City. Should the City Engineer deem it necessary to augment the traffic control devices and the Contractor be unresponsive or unwilling to do so, the Contractor will be charged the customary rental rate and force account charges for the required personnel to bring the site into compliance with the MUTCD.

2.2 Right of Way Use Permits

A. All street and sidewalk closures require a City issued Street Closure Permit.

B. Work within public right of way requires a City issued Right of Way use permit.

C. Work within State of Idaho highway right-of-way requires an Idaho Transportation Department (ITD) permit. These permits must be obtained through the City; not directly from ITD.

2.3 Payment: Traffic Control

Payment shall be as described in SP-100

~~Traffic control will be paid for as incidental to other bid items if there is no specific bid item for traffic control included in the proposal; OR, as a lump sum amount if traffic control is included~~

as a separate pay item in the proposal. Lump Sum price for traffic control includes furnishing, installing and maintaining the required devices to comply with MUTCD requirements.

ES-3. MATERIALS

All materials shall be new, free of defects, manufactured in the USA, and shall be furnished and installed according to the manufacturer's specifications.

ES-4. REMOVALS AND DISPOSALS

The Contractor shall be responsible for all removals indicated on the Plans and in the Specifications, and as may be necessary to complete the work in accordance with the true intent and meaning of the drawings and the details.

The Contractor shall patch, repair, and/or replace all existing work immediately adjacent to the newly constructed areas, or where removals are made, so that such adjacent work is left in the same state as their original condition. Such applications specifically shall apply to private driveways with the intent that all such driveways will be left with a smooth consistent and constant grade constructed of the same material and to the same specifications as originally used in constructing the driveway.

~~When s~~ ~~ions will~~
identify ill be stored.
Any ma ecome the
~~property~~

THE OWNER RESERVES THE RIGHT TO SALVAGE ITEMS NOTED FOR DEMOLITION. CONTRACTOR SHALL DISPOSE OF ALL ITEMS NOT SALVAGED BY THE OWNER. MATERIALS TO BE SALVAGED SHALL BE DELIVERED TO THE OWNER, COORDINATE WITH OWNER.

The Contractor may dispose of waste material in Contracting Agency-owned sites if the Specifications or the Engineer permits it. Otherwise, the Contractor shall arrange to dispose of waste at no expense to the Contracting Agency.

The Contractor shall acquire all permits and approvals required for the use of the disposal site. The cost of any such permits and approvals shall be included in the Bid prices for other Work.

The Contractor shall provide the Engineer the location of all disposal sites to be used and also provide copies of the permits and approvals for such disposal sites before any waste is hauled off the project.

The Contractor shall protect, indemnify, and save harmless the Contracting Agency from any damages that may arise from the Contractor's activities in making these arrangements. Any action required to satisfy any permit and/or any approval requirements in a Contractor-provided disposal site shall be performed by the Contractor at no additional expense to the Contracting Agency.

Removals and disposals will be paid by lump sum or unit price:

The price shall include all costs incurred to remove and dispose of the items bid including labor and equipment and other incidental costs.

ES-5. EARTHWORK

5.1 Excavation

All excavation shall be unclassified, except that which is required for the installation of pipe (storm, sanitary, water, drain), which is classified as trench excavation.

This work shall consist of excavation and disposal of all material, not being removed under some other item, which is encountered within the limits of the work necessary for the construction in accordance with the Specifications and in reasonable close conformity with the lines, grades, or thicknesses shown on the plans, or established by the Engineer.

This work shall include all excavation performed under this item regardless of the material encountered.

This work shall include the removal and disposal of any structure or any miscellaneous obstructions which are visible or are indicated on the plans which encroach upon or otherwise obstruct the work and for which a separate bid is not taken.

This work shall also include the preparation of the subgrade when the subgrade is not on a fill section. Subgrade elevation shall be below the gravel base elevation of pavement as indicated on the plans, and shall conform to the crown of the finished pavement surface. All depressions or ruts containing water shall be drained, as arranged with the Engineer. The entire surface shall be bladed to remove inequalities and secure a uniform surface. Line and grade stakes will be provided once by the Engineer, or his/her representative. The Engineer, or his/her representative, will set one set of stakes at fifty (50) foot intervals and at closer intervals where necessary. The subgrade shall be brought to a firm unyielding surface, true to line, grade, and cross section, by rolling and processing with equipment generally used for this purpose and acceptable to the Engineer. All soft, spongy, or yielding spots, which may be ordered to be removed by the Engineer, shall be entirely removed and replaced with geotextile and suitable rock material and thoroughly compacted to the satisfaction of the Engineer.

5.2 Structural Fill

This work shall consist of furnishing and placing selected material in one or more courses to form a stable roadbed in accordance with these specifications and in conformity with the Plans.

Structural fill (also ‘Borrow’ or ‘Embankment’) may consist of naturally occurring sand, sand gravel, sand and rock mixtures, decomposed granites, and native loess or clays. Sand and rock mixtures shall contain sufficient sand to fill the voids of the larger gravel

and stone to permit the required compaction. All borrow must be obtained from designated or approved sources. Structural fill shall be free of roots, bark, topsoils or other organic materials.

The surface upon which the structural fill is to be placed shall conform to the established lines and grades and shall be smooth and uniform, having been cleared of all vegetation, roots, stumps, topsoil, and foreign material.

The Contractor shall use necessary precautions in loading borrow to assure reasonable uniformity in grading.

Borrow shall be compacted with modern, efficient, compacting equipment satisfactory to the Engineer.

Embankment shall be placed in successive horizontal layers not exceeding eight (8) inches in loose thickness. All embankment shall be compacted to at least ninety-five (95) percent of the maximum density in accordance with AASHTO T-~~99~~ 180. At all locations that are inaccessible to a roller, the embankment shall be brought up in horizontal layers and compacted thoroughly with mechanical tampers. The horizontal layers shall not exceed eight (8) inches in loose thickness. The compacting equipment may be of any type provided they are capable of compacting each lift of the material to the specified density.

5.3 Payment

Payment shall be as described in SP-100

The accepted quantities of EXCAVATION will be paid for by the per cubic yard unit price or by lump sum. The quantity of excavation, as listed on the proposal or measured in the field, shall be used to compute the final payment, exclusive of any extra work ordered by the Owner or his/her representatives, as provided under Section GC-11, Extra Work.

The accepted quantities of STRUCTURAL FILL will be paid for by per cubic yard unit price or by lump sum. The unit price per cubic yard shall include all materials, labor, equipment and other costs incidental to furnishing and placing the borrow as herein specified and as shown on the plans.

ES-6. SUBGRADE SEPARATION GEOTEXTILES

6.1 Materials

Geotextile shall be Type II, nonwoven or woven, as set forth in **Section 718.07 – Subgrade Separation Geotextile Property Requirements** of the latest edition of the Idaho Transportation Department's Standard Specifications for Highway Construction.

6.2 Construction Requirements

Geotextile shall be furnished and installed in accordance with **Section 640 – Construction Geotextiles** of the latest edition of the Idaho Transportation Department's Standard Specifications for Highway Construction.

6.3 Payment

Geotextile will be paid for on the basis of unit price, per square yard, furnished and installed.

ES-7. CRUSHED ROCK BASE

7.1 Description

This work shall consist of furnishing and placing one or more courses of aggregate on a prepared surface in accordance with these Specifications and in reasonable close conformity with the lines, grades, thicknesses and typical sections shown on the Plans and/or established by the Engineer.

The Contractor shall make their own arrangements for obtaining crushed rock base material and shall designate the source of same in ample time to permit sampling and testing by the Engineer.

7.2 Aggregate

A. 3/4" (-) Aggregate shall conform to the following gradation:

Sieve Size	Percent Passing
1 inch	100
¾ inch	90 – 100
No. 4	40 – 65
No. 8	30 – 50
No. 200	3 – 9

The sand equivalent shall not be less than 30 if 5 percent or more of the material passes the No. 200 sieve. Sand equivalent will not be required if less than 5 percent passes the No. 200 sieve.

B. 1-1/4" (-) Aggregate shall conform to the following gradation:

Sieve Size	Percent Passing
1-1/2 inch	100
1 inch	90 – 100
½ inch	60 – 80
No. 4	35 – 60
No. 8	25 – 50

No. 30	10 – 30
No. 200	2 – 9

The sand equivalent shall not be less than 30 if 5 percent or more of the material passes the No. 200 sieve. Sand equivalent will not be required if less than 5 percent passes the No. 200 sieve.

7.3 Test Methods

Tests shall be made in accordance with the following applicable standard methods:

Field determination of density of soil in-place and percent compaction.	Idaho T-74
Compaction standard for coarse granular materials by use of the vibratory spring-loaded compactor.	Idaho T-74
Moisture density relations using a ~~5.5~~ 10 lb. rammer and 18 inch drop, method ~~A or~~ C.	AASHTO T-~~99~~ 180
Nuclear method for the determination of percent compaction in place density and moisture content of soils and aggregates.	WAQTC TM7

7.4 Placing

Prior to placing base rock, the excavated subgrade will be graded smooth and compacted to the satisfaction of the Engineer. Geotextile fabric shall then be placed upon the full width of the compacted subgrade. The geotextile fabric shall be as specified in Specification ES-6 SUBGRADE SEPARATION GEOTEXTILES. Joints between sections of fabric shall overlap a minimum of 2 feet along longitudinal joints and a minimum of 6 feet at end joints.

If the required compacted depth of the base course exceeds 8.0 inches, the base shall be constructed in two or more layers of approximate equal thickness.

7.5 Mixing

Unless otherwise specified, the Contractor shall mix the base course by any one or a combination of the three methods specified below:

Stationary Plant Method. The aggregate and water shall be mixed in an approved mixer. Water shall be added during the mixing operation in an amount necessary to facilitate compaction. After mixing, the base material shall be placed on the roadbed by means of an approved aggregate spreader.

Travel Plant Method. After the material for each layer of base course has been placed through an aggregate spreader or windrow sizing device, the base shall be uniformly mixed by a traveling mixing plant. During the mixing, water shall be added in an amount necessary to facilitate compacting.

Road Mix Method. After material for each layer of base course has been placed, the materials shall be mixed by motor graders or other approved equipment until the mixture is uniform throughout. During the mixing, water shall be added in an amount necessary to facilitate compaction.

7.6 Shaping and Compaction

After each layer has been spread it shall be compacted for its full width. The choice of compaction equipment will be left to the Contractor. Compaction shall continue until not less than 95% of the standard density is attained as determined by AASHTO T-~~99~~. 180

At the request of the Contractor, the Engineer, or his/her representative, will set one set of stakes at fifty (50) foot intervals and at closer intervals where necessary.

All soft, spongy, or yielding spots, which may be ordered repaired by the Engineer, shall be repaired in accordance with Specification ES-8 SOFT SPOT REPAIR.

7.7 Payment

Payment shall be as described in SP-100

~~The accepted quantities of CRUSHED ROCK BASE will be paid for by the unit price per ton. The unit price per ton shall include all materials, labor, equipment and other costs incidental to furnishing and placing the crushed rock, as herein specified and as shown on the plans.~~

~~Weight slips, in duplicate form, shall accompany each load of crushed rock to the construction site. Upon delivery of the material, one copy of the weight slip will be given to the Engineer, or his/her representative, and one copy will remain with the truck driver, before the material is unloaded. Under no conditions will any weight slips be accepted by the Engineer, or his/her representative, after the material is unloaded from the vehicle. It shall be the responsibility of the Contractor to give the Engineer ample advance notice of the time when such material shall arrive at the job site, in order to assure the presence of the Engineer, or his/her representative, at the job site during delivery of the material. The weight slips will be the only basis of determination of pay quantity for this item.~~

ES-8. SOFT SPOT REPAIR

8.1 Materials

Geotextile shall be Type II, nonwoven or woven as per Specification ES-6 SUBGRADE SEPARATION GEOTEXTILES. Crushed Rock Base shall be 1-1/4”(-) crushed basalt per Specification ES-7 CRUSHED ROCK BASE.

8.2 Construction Requirements

All soft spots in the subgrade shall be called to the attention of the Inspector prior to placing the geotextile fabric. The Inspector shall determine where additional excavation is necessary and instruct the Contractor on such over excavation.

All soft, spongy, pumping or yielding areas will be ordered by Engineer to be repaired as herein described:

1. Remove subgrade to a depth of one foot below design subgrade elevation.
2. Add Subgrade Separation Geotextile to the bottom of the excavated area. This layer of geotextile will be in addition to that required for the entire subgrade area.
3. Backfill the area with Crushed Rock Base (95% min. compaction) to subgrade design elevation.

Dispose of the excavated material per Specification ES-4 REMOVALS AND DISPOSALS.

The Contractor shall cooperate with the City in determining the areas that require Soft Spot Repair by furnishing a loaded dump truck and operator to roll over the entire subgrade area and, with the assistance of a City representative, locate and mark all soft spots.

8.3 Payment

SOFT SPOT REPAIR will be paid for on the basis of unit price, per square yard, complete, in-place; including excavation, base aggregate and geotextile.

The Engineer may determine that excavation in excess of the one foot depth may be required to accomplish the repair; in such instances compensation will be adjusted proportionately.

ES-9. WATERING

Bulk water furnished to contractors for the construction of City funded projects will be provided at NO cost to the contractor. Bulk water furnished to contractors for purposes other than the construction of City funded projects must be purchased from the City. All bulk water use by

contractors will be metered and paid for under rates and fees established by the City's most current adopted fee schedule and pursuant to City Code.

ALL BULK WATER WILL BE FURNISHED IN ACCORDANCE WITH THE CITY OF MOSCOW'S 'BULK WATER USE POLICY'.

Contractors shall coordinate ALL water usage with the Moscow Water Department.

ES-10. WEIGHING

Weighing equipment for the weighing of crushed stone surfacing materials, bituminous construction, etc., shall consist of and conform to Section 109, of the latest edition, of the Idaho Transportation Departments Standard Specifications for Highway Construction, and amendments thereto. In any event, the scales shall be tested and sealed, at the expense of the Contractor, as set forth in the Standard Specifications listed above. Weight slips in duplicate form shall accompany each load of crushed rock or asphalt to the construction site.

ES-11. CONCRETE

11.1 General

Portland cement concrete shall conform to Section 502 of the latest edition of the Idaho Transportation Department Standard Specifications for Highway Construction, and amendments thereto, and as follows:

Portland cement concrete shall be composed of Portland cement, fine aggregate, coarse aggregate and water, proportioned and mixed in accordance with these specifications. Unless otherwise provided, the Portland cement concrete shall be Idaho Transportation Department Class 40B having a minimum unit compressive strength at 28 days age of 4,000 psi. Class 40B concrete shall have 6 sacks of cement per cubic yard of concrete and an air entrainment content of 6.5 percent, plus or minus 1.5 percent. The slump shall be a maximum of five (5) inches and shall not vary more than one (1) inch from the average.

Class 4,000 concrete shall be used for curb and gutter, sidewalk, and pedestrian ramps. Type III Portland Cement shall be used in concrete placed for all driveways, approaches, and curb and gutter unless otherwise approved by the Engineer.

11.2 Portland Cement

Portland cement shall conform to AASHTO M-85, Type I or II and shall contain no more than 0.60 percent total alkali. Type III can be used with prior approval of the Engineer.

Unless otherwise permitted, the product of only one mill or any one brand and type of Portland cement shall be used on any single pour.

11.3 Aggregates

Aggregates shall be reasonably free from wood, roots, bark, soft or disintegrated pieces, or other deleterious matter. Blend sand may be approved for use to correct deficiencies in the grading

sizes, provided the combination meets the specification requirements for the class of material being produced.

Fine aggregate for concrete shall conform to the following gradation:

Sieve Size	Percent Passing
3/8 inch	100
No. 4	95 – 100
No. 16	45 – 80
No. 50	10 – 30
No. 100	2 – 10
No. 200	0 – 4

Sand equivalent shall be a minimum of 70.
Fineness modulus to be between 2.50 and 3.10 (AASHTO M-6).

The amount of deleterious substances shall not exceed the following limits:

	Percent by Weight Maximum
Clay lumps	1.0
Coal & lignite	1.0
Material to be reasonably free of shale, alkali, mica, coated grains, & soft flaky particles.	

Organic impurities shall not exceed those specified in AASHTO T-21. Mortar making properties shall conform to AASHTO T-71 or ASTM C87.

Coarse aggregate for concrete shall conform to the following gradations for coarse aggregate size No. 3:

Sieve Size	Percent Passing
1 1/2 inch	100
1 inch	95 – 100
1/2 inch	25 – 60
No. 4	0 – 10
No. 8	0 – 5

The amount of deleterious substances shall not exceed the following limits:

	Percent by Weight (Maximum)
Coal & lignite	1.0
Clay lumps	0.5

Material to be reasonably free of
shale, alkali, mica, coated grains, &
soft flaky particles.

11.4 Water

Water for concrete shall be obtained from any source of potable water. Sources of non-potable water shall be approved before use.

11.5 Curing Compound

The curing compound shall be a liquid membrane-forming curing compound conforming to AASHTO M-148 Type I, with a fugitive dye and shall be applied to all finished concrete surfaces immediately after the concrete has set.

11.6 Air Entraining Admixture

Air entraining admixture shall conform to AASHTO M-154.

ES-12. CONCRETE CONSTRUCTION REQUIREMENTS

12.1 Mixing and Delivery

A. Concrete shall be mixed and delivered by means of any of the following:
   1. Mixed complete in a stationary mixer and the mixed concrete transported to the point of delivery in agitating equipment or in non-agitating equipment when approved. (Known as central-mixed concrete.)

   2. Mixed completely in a truck mixer at the batching plant or while in transit. (Known as transit mixed concrete.)

   3. Mixed completely in a truck mixer at the point of delivery following the addition of mixing water. (Known as truck mixed concrete.)

   4. Mix partially in a stationary mixer and the mixing completed in a truck mixer. (Known as shrink-mixed concrete.)

B. Truck mixers and truck agitators shall be operated within the rated capacity and at a speed of rotation for mixing or agitating as designated by the manufacturer of the equipment.

C. When a stationary mixer is used for the complete mixing of the concrete, the mixing time for mixers having a capacity of 10 cubic yards or less shall be 60 seconds minimum. For 10 or more yards capacity, the mixing time shall be approved. Mixing time shall be

measured from the time all cement and aggregates are in the drum. The batch shall be so charged into the mixer that some water will enter in advance of cement and aggregates and all water shall be in the drum by the end of the first one-fourth (1/4) of the specified mixing time.

D. For shrink-mixed concrete, the mixing time in the stationary mixer may be reduced to a minimum of 30 seconds. Mixing shall be completed in a truck mixer by not less than 50 or more than 100 revolutions of the drum or blades at mixing speed. The batch volume shall not exceed 70 percent of the gross volume of the drum.

E. When a truck mixer is used for complete mixing each batch of concrete shall be mixed for not less than 70 nor more than 100 revolutions of the drum or blades at mixing speed. Additional mixing, if any, shall be at agitating speed.

F. When a truck mixer or agitator is used for transporting concrete that has been completely mixed in a stationary mixer, mixing during transport shall be at the agitating speed.

G. Unless otherwise approved, when a truck mixer or agitator is used for transporting concrete, the concrete shall be delivered to the site of the work and discharged completely within 1-1/2 hours or before the drum has been revolved 300 revolutions, whichever comes first, after the introduction of the cement to the aggregates. In hot weather or under conditions contributing to quick stiffening of the concrete, a time less than 1-1/2 hours may be directed. When a truck mixer is used for the complete mixing of the concrete, the mixing operation shall begin within 30 minutes after the cement has been intermingled with the aggregates. If additional mixing water is required to replace evaporated mixing water to maintain the specified slump and is added with the permission of the Engineer, a minimum of 20 revolutions of the truck mixer drum at mixing speed shall be required before discharge of any concrete.

Tests for consistency may be made at approximately the beginning, the midpoint, and the end of the load. If the results vary by more than the tolerance specified below, the mixer or agitator shall not be used until the condition is corrected.

When Average Slump is	Tolerance
3 inches or less	1/2 inch
More than 3 inches	1 inch

H. Central mixing concrete may be transported in suitable non-agitating equipment. The bodies of such equipment shall be smooth, watertight metal containers.

12.2 Re-tempering

Concrete shall be mixed only in such quantities as are required for immediate use and shall be used while fresh before initial set has taken place. Any concrete having initial set before placing and finishing shall be wasted and not used for the work. No re-tempering of concrete (remixing with water or other materials) will be allowed, unless otherwise approved by the Engineer, and in

no instance shall concrete be re-tempered at a rate in excess of 1 gallon of water per 1 cubic yard of concrete remaining in the truck.

12.3 Placing Concrete

General. Concrete shall not be placed until forms have been checked and approved by the Engineer. The forms shall be clean of all debris before concrete is placed. Concrete shall be placed so as to avoid segregation of the materials and the displacement of the reinforcement. Care shall be taken to fill each part of the form by depositing the concrete as near the final position as possible. After initial set of the concrete, the forms shall not be jarred and no strain shall be placed on the ends of projecting reinforcement.

12.4 Cold Weather Concreting

Heating and Placing Concrete. Before any concrete is placed, all snow and frost shall be completely removed. Concreting operations shall meet the following requirements when the ambient temperature falls below 40 degrees F.

To achieve adequate curing, the temperature of the concrete shall be maintained above 50°F during the entire curing period or 7 days, whichever is greater. The concrete temperature shall not be allowed to fall below 35°F during this time. Prior to placing concrete in cold weather, the Contractor shall provide a written procedure for cold weather concreting to the Engineer. The procedure shall detail how the Contractor will adequately cure the concrete and prevent the concrete temperature from falling below 35°F. Extra protection shall be provided for areas especially vulnerable to freezing (such as exposed top surfaces, corners and edges, thin sections, and concrete placed into steel forms). Concrete placement will only be allowed if the Contractor's cold weather protection plan has been approved by the Engineer.

The Contractor shall furnish concrete that will have a temperature of at least 50 degrees F and not more than 80 degrees F at the time of placing. Heating equipment shall heat all the materials uniformly. Such heating shall prevent the occurrence of non-uniform moisture contents or contamination in the aggregates. Aggregates shall be heated in a manner such that frozen lumps, ice and snow are eliminated. The average temperature of an individual batch of aggregate shall not exceed 150 degrees F.

The Contractor is solely responsible for protecting concrete from inclement weather during the entire curing period. Permission given by the Engineer to place concrete during cold weather will in no way ensure acceptance of the Work by the Contracting Agency. Should the concrete placed under such conditions prove unsatisfactory in any way, the Engineer shall still have the right to reject the Work although the plan and the Work were carried out with the Engineer's permission.

12.5 Placing in Hot Weather

The temperature of the concrete shall not exceed 80 degrees F at the time of placement. When the combination of ambient air temperature, concrete temperature, humidity and wind is such that rapid evaporation of moisture from the concrete surface will take place, the Contractor shall

take measures to slow the evaporation to tolerable limits. Such measures may include, but not limited to, erecting sun shades or placing at night or early morning. Ice may be used as a part of the mixing water providing it has completely melted by the time mixing is completed.

12.6 Finishing Concrete

If, in the judgment of the Engineer, rock pockets are of such extent or character as to materially affect the strength of the structure or to endanger the life of the steel reinforcement, he may declare the concrete defective and require the removal and replacement of that portion of the structure affected. All holes and depressions shall be cleaned, thoroughly wetted, and filled with cement mortar composed of one part of cement to two parts of sand. All fins caused by form joints and other projections shall be removed above ground line. The resulting surfaces shall be reasonably smooth and uniform in texture and color. After the concrete is placed, it shall be struck off with a template or a vibrating screen. Concrete shall be finished to an even surface by means of both longitudinal and transverse floats. The use of power trowels will not be permitted.

When concrete sidewalk has hardened sufficiently the surface shall be given a broom finish. The broom shall be of an approved type. The stroke shall be perpendicular to the centerline with adjacent strokes, slightly overlapped. The finish shall be free from porous spots, irregularities, depressions, small pockets or rough spots.

12.7 Curing Concrete

Concrete surfaces shall be kept completely and continuously moist until a curing method is applied. Curing compound shall not be applied to concrete surfaces before the finishing has been acceptably completed and shall not be applied to construction joints or to the inside faces of joints to be sealed with silicone joint sealer. The curing compound shall not be applied during rainfall.

Prior to completion of the curing period, if any membrane surface is marred or damaged by scuffing and wear, the Engineer may require an immediate application of the same type membrane or water cure for the remainder of the cure period.

Membrane forming curing compounds shall be thoroughly mixed before use and agitated during application to prevent settling of the suspended solids. The membrane must be uniformly applied.

Membrane forming curing compounds shall be applied to the finished concrete immediately after the bleed water or free-water sheen leaves the surface of the finished concrete surface.

The curing compound shall be a liquid membrane curing compound conforming to AASHTO M-148 Type I. Curing compound shall be applied under pressure, at the rate of application as directed, and shall be at least 1 gallon per 200 square feet for each application. All concrete cured by this method shall receive two applications of the curing compound for a total minimum coverage of 1 gallon per 100 square feet. The first coat shall be applied immediately after stripping the forms and/or acceptance of the concrete finish. If the surface under the forms has

dried the concrete shall be thoroughly wet with water and the curing compound applied just as the surface film of water disappears. The second application shall be applied after the first application has set. During curing operations all unsprayed exposed surfaces shall be kept wet with water.

Should the film become damaged from any cause, within 10 days, the damaged portion shall be repaired immediately with additional compound.

If this curing compound is applied to construction joints, it shall be removed by sandblasting before fresh concrete is placed against them.

All membrane forming curing compounds shall be accompanied by a Manufacturer's Certificate of Compliance and shall be approved by the Engineer, prior to its use.

12.8 Correction of Work After Completion of Construction – Two Year Warranty

The contractor/person installing the concrete shall be responsible for faulty and/or non-conforming materials or workmanship for a period of two (2) years from the date of the initial installation; he/she shall remedy any defects due thereto. The City shall give notice of observed defects with reasonable promptness.

Surface scaling (or spalling) of the new concrete surface will be the fundamental consideration for determining non-conforming workmanship and materials requiring remediation. Scaled surfaces exceeding 5% (randomly dispersed or concentrated) per twenty (20) square feet of concrete surfacing area will be considered defective and shall be replaced. Manner and method as well as configuration of the area requiring replacement will be as directed and approved by the City Engineer. All replacement of concrete shall be as per City standards and at the Contractor's expense.

ES-13. CONCRETE CURB

13.1 General

All concrete curb shall conform to the City of Moscow Standard Drawings, the Plans, and Specifications. Concrete for curbs shall conform to the requirements of ES-11 CONCRETE and ES-12 CONCRETE CONSTRUCTION REQUIREMENTS of these specifications.

13.2 Forms

Curb forms shall be set to line and grade as designated; securely staked, and so constructed as to result in finished lines true to the dimensions and shapes shown on the plans.

Forms shall be of wood or metal, straight and free from warp, and of sufficient strength to resist springing while placing concrete. Where a section must be constructed on a curve, straight lengths of the section shall be short enough that the middle ordinate to the curve, from the face of that section, does not exceed one-half (1/2) inch or the section shall be continuously curved.

13.3 Joints

Expansion joints (or thru joints) shall be provided at intervals of forty-eight (48) feet throughout the length of the curb and at the junction of straight curb and radii and at either end of a driveway or alley section. Pre-formed joint fillers of one-half (1/2) inch or three-eighths (3/8) inch thickness will be placed in expansion joints.

every 8-feet, or match adjacent sidewalk.

Contraction joints (or "Dummy Joints") shall be constructed every ~~sixteen (16) feet.~~ These joints shall be 1/8 inch minimum thickness and constructed to a minimum depth of 1-1/2 inches by scoring with a tool which will leave the corners rounded and destroy aggregate interlock.

13.4 Construction Requirements

A. Dimensions. All curbs, unless otherwise specified, shall be in accordance with dimensions conforming to one of the types shown on City of Moscow Standard Drawings as specified by the approved project plans.

B. Consistency. All Class A curb (cast in place) shall be of good plastic consistency and shall have a slump of three (3) inches and shall be tested by the Engineer according to the provisions of AASHTO T-119.

All Class C curb (extruded) shall meet the requirements for Class A curb, except for the amount of slump which may vary according to the conditions of the concrete mix and the extrusion equipment used. Under no circumstances however, shall the finished curb vary more than one-half (1/2) inch from the design elevation, and not more than ten (10) percent from the dimensions shown in the City of Moscow Standard Drawings and Specifications. Class C curbs will not require expansion joints.

13.5 Finishing

While the concrete is still green, the top and front face, or other exposed portions of the curb, shall be troweled to produce a uniform even surface then given a fine brush finish with brush strokes parallel to the long axis of the curb. Form marks and other irregularities shall be removed. The edges of the curb shall be rounded with an edger. Honeycombed areas in the back of the curb, that in the opinion of the Engineer are not detrimental to the curb, need not be patched.

13.6 Curing

Immediately after finishing, the concrete shall be cured in accordance with the requirements of ES-12.7, Curing Concrete.

13.7 Backfilling

All curb shall be backfilled as described herein. If sidewalk or concrete pavers are to be constructed behind the curb, all backfill material shall be 3/4" minus crushed aggregate. If the area behind the curb is to be lawn or planted area, the top 16 inches shall be topsoil. All denuded areas shall be fertilized, resown with grass seed and covered with mulch as specified in Sections ES-27 and ES-28.

13.8 Payment

Payment shall be as described in SP-100

~~The accepted quantities of curb will be paid for by the unit price per linear foot. Compacted aggregate base under the curb and curb and gutter pan at catch basin locations will be considered incidental to the unit price for the curb. The unit price per linear foot shall include all materials, labor, equipment and other costs incidental to constructing concrete curb as herein specified and as shown on the Plans and special drawings.~~

ES-14. CONCRETE SIDEWALK

14.1 General

All concrete sidewalk, including driveways, shall conform to the City of Moscow Standard Drawings, Contract Plans, and Specifications. Concrete for sidewalks shall conform to the requirements of ES-11 CONCRETE and ES-12 CONCRETE CONSTRUCTION REQUIREMENTS of these specifications.

Gravel base shall be per ES-7

14.2 Gravel Base

Sidewalk shall be constructed on a compacted base of (3/4) inch minus crushed rock; base aggregate shall be placed on compacted, non-pumping subgrade. The crushed rock shall have the following gradation:

Sieve Size	Percent Passing
1 inch	100
3/4 inch	90 – 100
No. 4	40 – 65
No. 8	30 – 50
No. 200	3 – 9

The sand equivalent shall not be less than 30 if 5 percent or more of the material passes the No. 200 sieve. Sand equivalent will not be required if less than 5 percent passes the No. 200 sieve.

The total thickness of the gravel base shall be at least six (6) inches, compacted, in-place.

The gravel base shall be graded, rolled, tamped, or otherwise compacted to ninety-five (95) percent of the maximum density determined in accordance with AASHTO T-~~99~~. 180

The gravel base shall be thoroughly sprinkled with water before the concrete is placed.

All cost for furnishing and placing gravel base for sidewalks shall be included in the unit price bid on the bid proposal form for constructing concrete sidewalks. No additional compensation will be made for this gravel base.

14.3 Construction requirements

A. Dimensions. Sidewalk width, thickness, and reinforcement shall be as shown on the City of Moscow Standard Drawings.

Sidewalk shall have a cross slope of between 1% and 2%, unless otherwise approved by the Engineer.

B. Forms. Side forms shall be rigid and shall bear full length on the compacted gravel base and shall be the full depth of the finished walk. Forms shall be well staked, braced or otherwise rigidly held to true line and grade and shall rest upon stakes driven into the ground at intervals sufficient to provide rigid support. If metal forms are used they shall be of a type satisfactory to the Engineer.

C. Placing and Finishing Concrete. SLUMP SHALL NOT EXCEED FIVE (5) INCHES. The concrete shall be spread uniformly between the forms and thoroughly consolidated and leveled with an approved strikeboard. Expansion joints of premolded joint material one-half (1/2) inch thick or three-eighths (3/8) inch thick may be constructed through the sidewalk at intervals of twenty (20) feet. Expansion joints may also be located where new sidewalk meets existing concrete, unless otherwise approved by the Engineer. Where applicable, joints in sidewalks and curb shall coincide.

After the concrete has been thoroughly consolidated and leveled it shall be bullfloated to eliminate high and low spots and to embed large aggregate. The concrete shall then be allowed to harden properly before jointing, edging, and brooming is completed.

Contraction joints shall be tooled into the concrete every four feet for four foot wide sidewalk and five feet for five foot wide sidewalk, shall be 3/8 inch minimum in depth, and shall be perpendicular to the direction of the walk. All joints shall then be edged with a 3/8 inch radius edger and the sidewalk edges shall be tooled with a one-half (1/2) inch radius edger.

After edging and jointing has been completed the concrete shall be smoothed with wood or metal hand floats. The floated surface shall then be coarse broomed uniformly in a transverse direction with a fiber hair brush or an approved type.

The placing and furnishing of all sidewalk shall be performed under the control of the Engineer, or his/her representative, and the tools shall meet with his/her approval.

The contractor shall keep a person at the job site for a minimum of four hours following the concrete surface brooming operation for the purpose of both preventing and repairing any damaged surfacing to the newly placed concrete. Concrete left unattended, if damaged or defaced shall be replaced at contractor expense.

D. Curing. Curing shall be performed by applying a sealing compound conforming to AASHO M-148 Type I to the surface of the concrete immediately after it has set sufficiently to permit such application. Curing shall conform to Section ES-12.7, Curing Concrete.

E. Backfill. After removal of the forms, the area behind the sidewalks shall be backfilled and compacted with at least sixteen (16) inches of topsoil level with the sidewalk and curb. Less than 16 inches of topsoil may be approved where new sidewalk is being constructed along older streets. The topsoil shall be raked or otherwise leveled, taking care to break up large dirt clods and remove large stones. All denuded areas shall be fertilized, resown with grass seed and covered with mulch as specified in Sections ES-27, ES-28.

14.4 Payment

Payment shall be as described in SP-100

~~The accepted quantities of concrete sidewalk will be paid for by the unit price per square yard. The unit price per square yard shall include all materials, labor, equipment, and other costs incidental to construction of concrete sidewalk, including aggregate base, as herein specified and as shown on the Plans and special drawings.~~

ES-15. SUPERPAVE HOT MIX ASPHALT

15.1 Hot Mix Asphalt

The Hot Mix Asphalt (HMA) pavement shall be placed in lifts to the thickness as specified on the Contract Plans and as required by the Standard Construction Drawings.

PAVEMENT THICKNESS SPECIFIED BY CITY OF MOSCOW DOCUMENTS (STANDARD DRAWINGS, STANDARD SPECIFICATIONS ETC.) SHALL MEAN THE FULLY COMPACTED, IN-PLACE DEPTH.

The materials of which the asphaltic concrete is composed shall be of such sizes and grading that, when proportioned and mixed together, they will produce a uniformly graded mixture, which when tested by means of laboratory screens, will conform to the requirements in the following table. The percentages of refer to the completed HMA mixture. All percentages shall be computed on the basis of weight. Screens and sieves used for determining the percentages of the different sizes of aggregate shall have square openings.

3/4" Superpave HMA Pavement CL SP-2 (Base Course)

Sieve Size	Percent Passing
1 inch	100
3/4 inch	90 – 100
1/2 inch	90 max
3/8 inch	52 – 80
No. 8	23 – 49
No. 200	2.0 – 8.0

1/2" Superpave HMA Pavement CL SP-2 (Surface Course)

Sieve Size	Percent Passing
3/4 inch	100
1/2 inch	90 – 100
3/8 inch	90 max
No. 8	28 – 58
No. 200	2.0 – 10.0

Superpave hot mix asphalt paving shall conform to the requirements, of the latest edition, of the Idaho Standards for Public Works Construction and amendments thereto. A copy of said specifications is available at the office of the City Engineer. Paving asphaltic cement used will be PG58-22 or PG58-28, or an approved equal, and shall conform to the specifications, of the latest edition, of the Washington State Department of Transportation Standard Specifications for Road, Bridge, and Municipal Construction and amendments thereto.

Section 405, of the latest edition, of the Idaho Transportation Department Standard Specifications for Highway Construction and amendments thereto, shall apply as to the items of "Weather Limitations, Hauling Equipment, Pavers, Rollers, Mixing Plant, Spreading and Finishing, Joints, Rolling, Surface Smoothness."

A Hveem or Super Pave Mix Design shall be submitted with associated "Job Mix Formula" (JMF) for approval, if required by the City Engineer.

15.2 Rolling and Compaction

Rolling and compaction of the asphaltic concrete mat shall be done in accordance, with the latest edition, of the Idaho Transportation Department Standard Specifications for Highway Construction and amendments thereto.

Compaction shall be achieved, as per Section 810, of the latest edition of the Idaho Standards for Public Works Construction and amendments thereto. A copy of said specifications is available at the office of the City Engineer.

The cost of the rolling and compaction shall be included in the price of furnishing and placing superpave hot mix asphalt pavement.

15.3 Tack Coat

Tack coat shall be applied at all edges where the new asphaltic surface joins the existing pavement and shall be applied in accordance with Section 401, of the latest edition, of the Idaho Transportation Department Standard Specifications for Highway Construction and amendments thereto.

15.4 Payment

Payment shall be as described in SP-100

~~The accepted quantities of superpave hot mix asphalt pavement will be paid for by the unit price per ton or per square yard. The unit price shall include all materials, labor, equipment, and other costs incidental to furnishing and placing the superpave hot mix asphalt pavement herein specified and as shown on the plans.~~

~~Weight slips in duplicate form shall accompany each load of superpave hot mix asphalt pavement to the construction site. Upon delivery of the material, one copy of the weight slip will be given to the Engineer, or his/her representative, and one copy will remain with the truck driver before the material is unloaded. Under no conditions will any weight slips be accepted by the Engineer, or his/her representative, after the material is unloaded from the vehicle. It shall be the responsibility of the Contractor to give the Engineer ample advance notice of the time when such material shall arrive on the job site in order to assure the presence of the Engineer, or his/her representative, at the job site during delivery of the material. The weight slips will be the only basis of determination of pay quantity for this item.~~

ES-16 CEMENT CONCRETE PAVEMENT

16.1 General

Portland cement concrete shall conform to Section ES-11 CONCRETE, of these Specifications except as modified by the following sections and subsections.

16.2 Aggregates

Aggregates shall possess such characteristics of shape and size that concrete, prepared from a mixture of fine and coarse material in the proportions specified, will be of satisfactory workability in the opinion of the Engineer. Regardless of compliance with all other provisions of these specifications, if the concrete is not of a workable character or when finished does not exhibit a proper surface, either the fine or the coarse aggregate or both shall be rejected or altered as required by the Engineer.

A. Fine aggregate shall consist of sand or other inert materials, or combinations thereof approved by the Engineer, having hard, strong, durable particles free from adherent

coating. Fine aggregate shall be thoroughly washed to remove clay, loam, alkali, organic matter or other deleterious matter.

Fine aggregate with more than the maximum percentage passing any sieve may be accepted provided the mix proportions are adjusted to produce concrete having the same net water-cement ratio, slump and workability. Any resulting increase in the cement content shall be at the expense of the Contractor. Under no circumstances shall the fine aggregate, which has a grading finer than that permitted under Section 703, of the latest edition, of the Idaho Transportation Department Standard Specifications for Highway Construction, and amendments thereto, be used in paving concrete.

Fine aggregate shall develop in the mortar strength test, at an age of 7 days, a compressive strength of not less than ninety (90) percent of the strength of a mortar prepared with the same cement (AASHTO T-71 or ASTM C-87) .

B. Coarse aggregate shall consist of gravel, crushed stone or other inert material or combinations, thereof approved by the Engineer, having hard, strong, durable pieces free from adherent coatings. Coarse aggregate shall be thoroughly washed to remove clay, loam, bark, sticks, alkali, organic matter, or other deleterious material.

Coarse aggregate containing more than the maximum percentage passing any screen may be accepted provided the mix proportions are adjusted to produce concrete having the same net water-cement ratio, slump and workability. Any resulting increase in the cement content shall be at the expense of the Contractor.

Coarse aggregate shall not be used, under any circumstances in paving concrete, when the amount by weight passing the screens exceeds the following:

3/4" square opening.....70%
3/8" square opening.....30%

C. Properties of concrete aggregate shall be determined in accordance with the following methods of test:

1. Amount of Material Finer than No. 200 Sieve in Aggregates: ASTM Designation C-117.
2. Organic Impurities: AASHTO T-113.
3. Flexural Strength of Concrete: AASHTO T-104.
4. Percentage of Particles of Less than 1.95 Specific Gravity: AASHTO T-150.
5. Clay Lumps in Aggregates: AASHTO T-112.
6. Abrasion of Coarse Aggregate by Use of the Los Angeles Machine; AASHTO T-96.

16.3 Curing and Protection

A. Curing and protection shall conform to the specifications of Section 703, of the latest edition, of the Idaho Standards for Public Works Construction and amendments thereto. A copy of said specifications is available at the office of the City Engineer.

16.4 Joint Fillers and Sealants

A. Joint fillers and sealants shall conform to the specifications of Section 705, of the latest edition, of the Idaho Standards for Public Works Construction and amendments thereto. A copy of said specifications is available at the office of the City Engineer.

16.5 Air-Entrained Concrete

Air-entrained concrete shall be used, as per ES-11, unless otherwise provided for in the Special Provisions. Either air-entrained Portland cement or an air-entraining admixture shall be added at the mixer.

The volume of air in freshly mixed concrete shall conform to that specified in the table which follows:

AIR CONTENT OF FRESHLY MIXED CONCRETE

Maximum Size of Coarse Aggregate (Inches)	Air Content (Percent by Volume)
1-1/2, 2, and 3	5 ± 1
3/4 and 1	6 ± 1
3/8 and 1/2	7-1/2 ± 1

If the measured air content is found above or below the values contained in the table, the Contractor shall immediately make changes in mixing or materials as will be necessary to comply with the requirements for air content.

If an air-entraining agent is used, it shall be introduced at the nominal rate of one fluid ounce per sack of cement, but the rate shall be varied if necessary to comply with the requirements for air content.

An automatic dispenser accurate to 10%, which will introduce into the mixing water the specified amount of air-entraining agent for each cycle of mixing, shall be connected to the mixer.

Aggregates shall be adjusted to compensate for increased yield resulting from air-entrainment so that the specified amount of cement is contained in each cubic yard of concrete. Adjustment shall be made by decreasing the weight of fine aggregates only, unless otherwise directed by the Engineer.

Other Admixtures: Calcium chloride or any other admixture for any purpose other than air-entrainment may be added only upon the approval of the Engineer and under his/her supervision.

16.6 Reinforcing Steel

Reinforcing steel shall consist of round or square deformed bars or wire mesh. Square twisted bars shall not be used.

A. Deformed steel bars for concrete reinforcement sizes No. 3 through 11 shall conform to the requirements of ASTM A-615M, Billet Steel Bars for Concrete Reinforcement, Grade 60, except as noted on the plans and except that the bars shall be made only by the open-hearth process or the electric furnace process.

   The form of the deformed bars shall conform to ASTM A-706M, Minimum Requirements for Deformations of Deformed Steel Bars for Concrete Reinforcement.

   Deformed bars size No. 14 and size No. 18 for concrete reinforcement shall conform to the requirements of ASTM A-615M, Special Large Size Deformed Billet Steel Bars for Concrete Reinforcement Intermediate Grade.

B. Wire mesh for concrete reinforcement shall conform to the requirements of the standard specifications of AASHTO M-55, Welded Steel Wire Fabric for Concrete Reinforcement. All wire mesh shall be of an approved kind and quality of manufacture.

C. Tie bars shall be free from rust, loose mill scale, dirt, grease or other defects affecting the strength or bond with the concrete.

16.7 Measurement of Materials

The fine aggregate and each size of coarse aggregate shall be measured by weighing. Corrections shall be made for variations in weight of material due to moisture content and specific gravity. The quantities of aggregates used in each batch shall be such that the cement can be measured in full sacks unless it is weighted in bulk.

Fine and coarse aggregate shall be proportioned by weight, except that if the project is small, then volumetric proportioning may be used with permission of the Engineer. In proportioning, the unit of measure for cement will be by the sack, ninety-four (94) pounds.

Weights of fine and coarse aggregate are based on a bulk specific gravity, saturated surface dry, of 2.67. When volume measurements are used, one cubic foot of sand shall be taken as equivalent to 100 pounds of sand and one cubic foot of gravel shall be taken as equivalent to 105 pounds of gravel. Corrections must be made for contained moisture in the aggregates and variations in specific gravity.

Concrete mixes shall be proportioned to the satisfaction of the Engineer. The proportion of aggregate may be altered to give better workability only upon written approval of the Engineer.

16.8 Re-tempering

Concrete shall be mixed only in such quantities as are required for immediate use and shall be used while fresh before initial set has taken place. Any concrete having initial set before placing and finishing shall be wasted and not used for the work. No re-tempering of concrete (remixing with water or other materials) will be allowed.

16.9 Construction of Portland Cement Concrete Pavement

Construction of Portland cement concrete pavement shall conform to the requirements of Section 705, of the latest edition, of the Idaho Standards for Public Works Construction and amendments thereto. A copy of said specifications is available at the office of the City Engineer. Concrete pavement batches shall meet the requirements of Section 703, of these Standard Specifications.

Concrete batch proportions shall be approved by the Engineer and any subsequent changes to the approved batch must be made in writing by the Engineer.

16.10 Payment

Payment shall be as described in SP-100

The accepted quantities of Portland cement concrete pavement will be paid for by the unit price per square yard. The unit price per square yard shall include all materials, labor, equipment and other costs incidental to furnishing and placing the Portland cement concrete pavement herein specified and as shown on the plans.

Batch slips in triplicate form shall accompany each load of concrete for pavement delivered to the construction site. Upon delivery of the material, one copy of the batch slips will be given to the Engineer, or his/her representative, and one to the Contractor. Delivery of concrete shall mean discharged from the mixer truck and all water added to the mix shall be added to the batch slip. It shall be the responsibility of the Contractor to give the Engineer ample advance notice of the time when such material shall arrive at the job site in order to assure the presence of the Engineer, or his/her representative, at the job site during material delivery. The batch slips may be used for the determination of cross section conformity.

1. All catch basins shall be separated from the pavement and curb by boxing out around basin. Expansion joint material shall extend completely through curb and slab. Manhole castings within the pavement limits shall be boxed in like manner except when telescoping type castings are used.

2. When a joint falls within 5 feet of, or contacts, basins, manholes or other structures, shorten one or more panels either side of opening to permit joint to fall on round structures and at or between corners of rectangular structures.

3. All transverse joints must extend through curbs and must be continuous across pavement, except tied transverse construction joints. Expansion joints will not be required except at structures or as shown on the plans.

4. Transverse sawed joints to be a + 15' o.c. as shown on drawings. Joints at 60' to be sawed the same day as placement. Intermittent joints at 15' to be sawed next day after placement. Longitudinal joints shall be sawed prior to permitting traffic on the pavement.

ES-17. ADJUSTMENT OF GATE VALVE BOXES, MONUMENTS, CATCH BASINS, CATCH INLETS, AND MANHOLES

Gate valve boxes, catch basins, catch inlets, monument casings, and manholes shall be adjusted to the grade, as established by the Engineer. Valve boxes, casings, rings and covers shall be reset in a careful and workmanlike manner to conform to the new grade. Special care shall be exercised in all operations in order not to damage the structures, equipment or water mains. Any damage occurring to the manholes, catch basins, gate valves, monuments, water meters or water mains, due to the contractor's operation, shall be repaired at the contractor's expense. Any masonry adjustment shall be made by using pre-cast risers, bricks, concrete blocks or poured concrete.

The Contractor shall notify the appropriate utility company, in advance, if gas valve boxes need to be adjusted, so the utility company personnel can do so, in a timely manner.

The Contractor shall notify the City Water Department, in advance, if water meter boxes need to be adjusted, so the Water Department personnel can do so, in a timely manner.

Location of valve boxes, catch basins and manholes on the plans is approximate only. They will be accurately located and referenced by the Engineer, or his/her representative, whenever possible. Manhole lids and catch basin and monument covers and valve box lids shall, preferably, be set to grade following the final application of asphaltic concrete. During paving operations, tops of manholes, monuments, catch basins and valve box lids shall be covered with building paper, diesel oil, or other suitable material to prevent sticking of asphalt to the metal lids.

Where excavation is necessary to adjust the grade of manholes, catch basins, monuments, or valve boxes, the backfill shall be carefully placed and tamped by hand.

~~Payment for adjustment of manholes, catch basins, gate valves, and monuments will be made according to the unit price for each unit adjusted:~~

Payment shall be as described in SP-100

The unit price bid shall include all costs incurred in furnishing materials and labor necessary to adjust the particular units to grade.

ES-18. MANHOLES AND CATCH BASINS

18.1 General

Catch basins, catch inlets, and manholes shall be precast reinforced concrete units, furnished and installed in accordance with the project plans, these Standard Specifications, and the Standard Drawings.

Completed catch basins and manholes including ring shall be capable of withstanding, with a reasonable margin of safety, a concentrated load of 20,000 pounds.

Backfill shall be placed in horizontal layers no more than 6 inches thick with each layer compacted to 95 percent of the maximum density or as approved by the Engineer.

18.2 Precast Reinforced Concrete Manholes, Catch Basins, and Catch Inlets

Precast reinforced manholes, catch basins, and catch inlets sections shall conform to AASHTO M-199, ASTM C-478 and ASTMC-433 and as shown on the Standard Construction Drawings.

A. Base Sections. Base shall be placed on a well graded dewatered granular bedding course. The bedding course shall be firmly tamped and made smooth and level to assure uniform contact and dimensions shall conform to the standard drawings. If the base is cast in place, the concrete shall conform, to the latest edition, of the Idaho Transportation Department Standard Specifications for Highway Construction Class 30 concrete. Where water is encountered at the site all cast in place bases shall be placed on a one-piece waterproof membrane so as to prevent any movement of water into the fresh concrete.

B. Joints. All lift holes and all joints between precast elements shall be first filled with an asphaltic fiber material then finished smooth with mortar. The fiber shall be Ramneck brand or approved equal.

C. Steps. Not required.

D. Workmanship and Finish. Cones and sections shall be substantially free from fractures, large and deep cracks and surface roughness. In precast sections where loops have been provided in lieu of lift holes, the loops shall be removed flush with the inside wall surface after the manhole or catch basin has been completed. No sharp cut-off protrusions will be permitted. If concrete spalling occurs as a result of loop removal, the spalled area shall be restored in workmanship manner to a uniform smooth surface with mortar.

18.3 Rings and Lids

Rings and lids shall be cast iron and shall conform to the Standard Drawings. Castings shall conform to the requirements of ASTM A-48 Class 138 and shall be free of porosity shrink cavities, cold shuts or cracks, or any surface defects which would impair serviceability.

18.4 Sanitary Sewer Manholes

A. General. Sanitary sewer manholes shall be constructed according to Plans, Standard Drawings and Specifications. All sanitary manholes shall be constructed of precast reinforced concrete sections.

Delete paragraph

~~The Contractor may construct through the manhole by either running sewer pipe through the bottom of the manhole, pouring concrete around the pipe and breaking out the upper half of the pipe, or by pouring concrete in the bottom of the manhole and forming a channel through the manhole by hand.~~

B. Basis of Payment. Sanitary sewer manholes will be paid for according to the unit price per each or per vertical foot.

The unit price bid shall include all cost incurred in furnishing materials, labor, excavation, installing the manholes in place including the asphaltic coating on the outside of the manhole and the manhole rings and lids, and backfilling.

C. Watertightness

1. SANITARY SEWER MANHOLES SHALL BE CONSTRUCTED WATERTIGHT. All visible leaks (infiltrating subsurface water) shall be sealed; sealing shall be accomplished by a manner and method, in the opinion of the Engineer, that constitutes permanency. Leaks that cannot be sealed by Contractor shall be sealed either by the pressure grouting method (injected chemical sealants) or the interior surface coating method, utilizing a firm specializing in such services, at the Contractor's expense. Less than four minor drips in a single manhole will be considered negligible and will not require sealing.

2. Hydrostatic Testing.

   a. All sanitary sewer manholes constructed in areas where subsurface water may, in the opinion of the Engineer, pond around them shall be hydrostatically tested in accordance with this specification.

   b. Prior to testing, the manhole shall be completely constructed and all inlet and outlet pipes shall be plugged. The Contractor shall fill the manhole to the top with water. Four hours minimum after the manhole has been filled, the Contractor shall refill the manhole to the original water level and commence the test for a minimum 2-hour period. The leakage rate shall not exceed 0.2 gallons per hour per foot of test head above the pipe invert elevation. Manholes which fail the test shall be repaired and re-
   . Sources of non pass.

   c. Manholes tested by the exfiltration method shall have all infiltrating water sealed prior to beginning the exfiltration test.

3. Vacuum Testing - per ISPWC 502 is allowed as an alternative to Hydrostatic Testing

18.5 Storm Sewer Manholes

A. General. Storm sewer manholes shall be constructed according to the Plans, Standard Drawings and Specifications. Storm sewer manholes shall be precast reinforced concrete, unless otherwise approved by the Engineer.

All pipe extending into catch basins shall be trimmed within 1”-2” of the inside wall surfaces and shall be neatly grouted inside and out and watertight.

B. Basis of Payment. Storm sewer manholes will be paid for according to the unit price per each or per vertical foot.

The unit price bid shall include all costs incurred in furnishing materials, labor, excavation, installing manholes in place including the manhole rings and lids, and backfilling.

18.6 Catch Basins and Catch Inlets

A. General. Catch basins and catch inlets shall be constructed according to the Plans, Standard Drawings and specifications. Catch basins shall be precast reinforced concrete per WSDOT TYPE 1, catch inlets shall be WSDOT CONCRETE INLET - unless otherwise approved by the Engineer.

All pipe extending into basins and inlets shall be trimmed within 1”-2” of the inside wall surfaces shall be neatly grouted inside and out and watertight

Lids, grates, and risers shall be centered over the basin or inlet; unless specifically allowed otherwise.

B. Payment. Catch basins will be paid for by the unit price per each.

The unit price shall include all cost incurred in furnishing materials, labor, excavation, installing catch basins in place including the catch basin rings and lids, and backfilling.

18.7 Risers

A. Risers for height adjustment shall be as per WSDOT’s standard for the precast unit being furnished.

ES-19. TRENCH EXCAVATION AND BACKFILL

19.1 Scope

This section covers the work necessary for the trench excavation and backfill above the pipe zone. Pipe zone backfill is included under the specification for the pipe.

19.2 Type of Backfill

The class of backfill to be used above the pipe zone shall be as set forth on the Plans or as given in the project Special Provisions and if not specifically set forth in project documents then as required by the "use" description given herein. The right is reserved to modify the use, location, and quantities of the various types of backfill, during construction, as the Engineer considers being in the best interest of the Owner.

Trench backfill, above the pipe zone, shall be as follows:

1. Class A Backfill. Use in landscaping and agricultural type areas where lawn sod, shrubs, topsoil, fences, and other landscape items are either being replaced or are anticipated.
2. Class B Backfill. Use within existing or proposed gravel parking lots – not within gravel streets or alleys.
3. Class C Backfill. Use in areas where asphalt pavement, concrete, curb, sidewalk, gravel surfacing, landscaping and agricultural use is not anticipated, present or future.
4. Class D Backfill. Use in existing gravel streets and alleys, existing gravel roadway shoulders and in areas where asphalt pavement, concrete, curb, and sidewalk is existing or anticipated in the future.
5. Class E Backfill. Use in lieu of Class D Backfill in new streets when specifically allowed by the City Engineer.
6. Class F Backfill. Use within and immediately adjacent to existing asphalt paved streets, alleys, driveways, and parking lots.

19.3 Excavation and Backfill for Fire Hydrants

~~Excavation and backfill for fi~~ Payment shall be as described in SP-100 ~~ce payment for Fire Hydrants (See ES-22).~~

19.4 Trench Excavation

Trench excavation shall be classified as common excavation or rock excavation and shall include whatever materials are encountered to the depths as shown or as directed by the Engineer.

Common Excavation. Common excavation is defined as the removal of all material which is not classified as rock excavation.

Rock Excavation. Rock excavation shall conform to all specifications of Section 302, of the latest edition, of the Idaho Standards for Public Works Construction and amendments thereto. A copy of said Specifications is available at the office of the City Engineer.

19.5 Materials

A. Foundation Stabilization. Materials for foundation stabilization shall be 3/4 inch minus crushed rock with reasonable even gradation from coarse to fine and free from excessive dirt or other foreign material.

B. Granular Material. Granular backfill shall be 3/4 inch minus crushed basalt conforming to ES-7 CRUSHED ROCK BASE.

C. Imported Topsoil. Imported topsoil shall possess friability and a high degree of fertility. It shall be free of clods, roots, gravel and other inert material. It shall be free of quack grass, horsetail and other [illegible] uld such regenerative material be present in the soil, it s[illegible] ntractor to remove all such growth, both surface and root, which may appear in the planting within one year following acceptance of the job, at his/her own expense, and in a manner satisfactory to the Owner.

Import Topsoil shall be per ES-27

D. Compaction Equipment. Compaction equipment shall be of suitable type and adequate to obtain the amount of compaction specified. Compaction equipment shall be operated in strict accordance with the manufacturer's instructions and recommendations and shall be maintained in such condition that it will deliver the manufacturer's rated compactive effort.

19.6 Workmanship

A. Clearing. Do not remove existing trees or tree limbs over 2 inches in diameter, whether on public or private property, unless they are within 4 feet of the pipe centerline without permission from the Engineer. All such work shall conform to the City's Community Forestry ordinance. The Contractor shall bear all costs of disposing of trees, stumps, brush, roots, limbs, and other waste materials from clearing operations. Material shall be disposed of in such a manner as to meet all requirements of state, county and local regulations regarding health, safety and public welfare.

B. Obstructions. This term refers to obstructions which may be removed and do not require replacement. Obstructions within the trench area or adjacent thereto such as tree roots, stumps, abandoned piling, buildings and concrete structures, logs, rubbish and debris of all types shall be removed without additional compensation from the Owner. The Engineer will, if requested, make changes in the trench alignment to avoid major obstructions; if such alignment changes can be made within the perpetual easement and right-of-way and without adversely affecting the intended function of the facility.

The contract amount will be adjusted accordingly for any cost changes resulting from such alignment modifications.

Dispose of obstructions removed from the excavation in accordance with section ES-4 REMOVALS AND DISPOSALS.

C. Utility Repairs. Any and all underground utility damaged in any way during trench excavation shall be repaired and properly backfilled, by the Contractor, at no cost to the City. The repair shall be as approved by the City – NO EXCEPTIONS.

D. Removal and Replacement of Topsoil. In all cases where trenches cross lawns, garden areas, pasture lands, cultivated fields, or other areas on which reasonable topsoil conditions exist; first remove the topsoil for a depth of 10 inches for the full width of the trench to be excavated. Stockpile this topsoil to one side of the right-of-way and do not mix with the remaining excavated material. Replace the topsoil in the top 10 inches of the backfilled trench.. In lieu of stockpiling the top 10 inches of soil, "Imported Topsoil" from borrow pits may be substituted in the top 8 inches. Maintain the finished grade of the topsoil, over the center line of the trench, level with the immediate area bordering the trench, until acceptance of final seeding. Correct all damage to adjacent topsoil caused by trenching or pipe laying operations by removal of all rock, gravel, clay, and any other foreign materials from the surface and by regrading the additional topsoil as required.

E. Pavement, Curb and Sidewalk Removal. Cut (full depth) all asphaltic concrete or Portland Cement concrete pavements (regardless of the thickness), and all curbs and sidewalks prior to excavation of the trenches with an approved pavement saw, hydrohammer or other approved pavement cutter. Removal of street surfacing for excavations shall comply with the Specifications and Standard Drawing for Street/Alley Curb Repair. Pavement and concrete materials removed shall be hauled from the site and not used for trench backfill.

or per manufacturer's recommendations (whichever is greater)

F. Trench Width. Minimum width of trenches in which pipe is to be laid shall be 18 inches greater than the inside diameter of the pipe except by permission of the Engineer.

The maximum clear width at the top of the trench will not be limited, except in cases where excess width of excavation would cause damage to adjacent structures or property.

In all cases, confine trench widths to dedicated rights-of-way for public thoroughfares or within areas for which construction easements have been obtained.

G. Grade. Carry the bottom of the trench to the lines and grades shown, or as established by the Engineer, with proper allowance for pipe thickness and for pipe base or special bedding, when required. If the trench is excavated below the required grade, correct any part of the trench excavated below the grade, at no additional cost to the Owner, with gravel of the type specified for pipe zone material. Place the gravel over the full width of trench in compacted layers, not exceeding 6 inches deep, to the established grade with allowance for the pipe base or special bedding.

H. OSHA Compliance. All trench excavation and backfill shall conform to the latest published OSHA regulations, NO EXCEPTIONS.

I. Location of Excavated Materials. During trench excavation, locate the excavated material within the construction easement or right-of-way or specified working area so

that the excavated material will not obstruct private or public traveled roadways or streets. It shall be the contractor's responsibility to conform with the federal, state and local codes governing the safe loading of all trenches with excavated material.

J. Removal of Water. Provide and maintain ample means and devices which will promptly remove and dispose of all water entering the trench excavation during the time the trench is being prepared for the pipe laying, during the laying of pipe, and until the backfilling of the pipe zone has been completed. These provisions shall apply during the lunch hour as well as overnight.

Dewatering shall be per ISPWC Section 205 and Special Provisions

Dispose of the water in an approved manner without damage to adjacent property.

Drainage of trench waste through the pipeline, under construction, is prohibited.

K. Foundation Stabilization. When, in the opinion of the Engineer, the existing material in the bottom of the trench is unsuitable for supporting the pipe, excavate below the flow line of the pipe, as directed by the Engineer, and backfill the trench to the subgrade of ~~pipe base with approved material.~~ Place the material over the full width of the trench in compacted layers, not exceeding 6 inches deep, to the established grade.

with foundation stabilization material per ES-19.5

L. Backfill in Pipe Zone. Pipe zone backfill is included in the Specification for the pipe.

M. Trench Backfill Above Pipe Zone. Do not push the backfill material into the trench in such a way as to permit free fall of the material into the open trench, until at least 2 feet of cover is provided over the pipe. Under no circumstances allow sharp, heavy pieces of material to drop directly onto the pipe or the tamped material around the pipe. Do not use backfill material of consolidated masses larger than ~~1 cubic foot~~.

0.3 feet in diameter.

N. Classes of Backfill.
Trench backfill shall comply with the City's Standard Construction Drawings and as follows:

1. <u>Class A Backfill</u>
Backfill the trench, above the pipe zone, with approved excavated trench material to within 10 inches of final surface grade. Compact the entire trench depth in suitable lifts with a vibratory compactor, pneumatic or gasoline powered tampers, or hydraulic hammers. Determine the method and type of equipment and amount of compaction required to prevent subsequent settlement.

Where Class A backfill is specified replace topsoil in the top 10 inches of the trench. Compact and rake to match the ground surface adjacent to the trench.

Maintain the surface of the backfilled trench level with the existing grade until the entire project is accepted by the Owner. Any subsequent settlement of the finished surfacing during the warranty period shall be considered to be a result of

improper or insufficient compaction and shall be promptly repaired by the Contractor at no cost to the Owner.

2. Class B Backfill

Backfill the trench, above the pipe zone, with approved excavated trench material to within 6 inches of final surface grade. Compact the entire trench depth in suitable lifts with vibratory compactors, pneumatic or gasoline power tampers, or hydraulic hammers. Determine the method and type of equipment and the amount of compaction required to prevent subsequent settlement. Place and compact granular material in the top 6 inches.

Maintain the surface of the backfilled trench level with the existing grade by additions of granular backfill material, as specified, until final surface replacement is completed or the entire project is accepted by the Owner. Any subsequent settlement of the finished surface, during the warranty period, shall be considered to be a result of insufficient compaction and shall be promptly repaired by the Contractor at no cost to the Owner.

3. Class C Backfill

After the completion of the backfilling of the pipe zone, the excavated trench material may be pushed back into the trench by mechanical means.

In all locations where Class C backfill is used, the Contractor shall make his/her own estimate of the amount of backfill material required at the trench, so that after normal settlement has occurred, the finished surface will meet the existing grade. Neatly windrow the material over the trench and remove all excess. Any excess or deficiency of backfill material, which becomes apparent after settlement within the warranty period, shall be corrected by regrading, disposing of excess material or adding additional material where required. Remove rocks larger than 2 inches from the upper 8 inches of backfill.

4. Class D Backfill

Backfill the entire trench, above the pipe zone, with granular backfill material. Compact the entire trench depth to 95 percent density in 6 inch lifts with mechanical, vibrating or impact tampers. Determine the method and type of equipment and amount of compaction required to prevent subsequent settlement.

Maintain the surface of the backfilled trench level with the existing grade with crushed rock backfill material until final surface replacement is completed or the entire project is accepted by the Owner. Any subsequent settlement of the finished surface during the warranty period shall be considered to be a result of insufficient compaction and shall be promptly repaired by the Contractor at no cost to the Owner.

5. Class E Backfill

Class E trench backfill is to be used only where a new paved street is going to be constructed above the installed pipe.

The width of the trench, above the pipe zone, may be increased beyond the required specifications for pipe zone width, as described in the City of Moscow Standard Drawing #15, but shall not be less than (6) six feet.

180

Approved native excavated material may be used for backfill above the pipe zone in this widened trench. Compaction for all trench backfill, above the pipe zone, shall be 95% minimum of AASHTO T-~~99~~. All native backfill shall be placed in (6) six inch maximum lifts and method of compaction shall be only by a (5) five foot minimum wide sheepsfoot roller. Density testing frequency, for this approved native excavated material, will be in excess of that required for the Class 'D' crushed basalt backfill.

6. Class F Backfill

Backfill the trench, above the pipe zone, with granular material to within 4 inches of the finished surface.

modified

Compact the entire trench, above the pipe zone, in six (6) inch maximum lifts with vibratory compactors, pneumatic or gasoline power tampers, or hydraulic hammers to a minimum 95 percent ~~standard~~ density. The top 4 inches of the trench is to have smooth cut edges before being backfilled with two equal lifts of asphaltic concrete patching mix.

7. Subsurface Drain Backfill

Backfill the entire trench to within 10 inches of the final surface grade or to the street subgrade, as applicable, with crushed or naturally occurring granular material from approved sources.

The material shall be washed, if necessary, to render the particles free from clay. It shall contain no more than 1% of clay lumps or other decomposed material. It shall conform to the following requirements for grading:

Sieve Size	Percent Passing
3"	100
2.5"	95 – 100
3/4"	50 – 80
1/4"	30 – 60
No. 8	20 – 50
No. 30	8 – 30
No. 50	3 – 12
No. 200	0 – 1.2

* All percentages are by weight.

That portion of the gravel backfilled for drains retained on a 1/4" square sieve shall not contain more than 0.05% by weight of wood waste.

Compaction, above the pipe zone, shall be accomplished by the use of mechanical, vibrating or impact tampers. Determine the method and type of equipment to use and amount of compaction required to prevent subsequent settlement.

Maintain the surface of the backfilled trench level with the existing grade by additions of granular backfill material as specified until final surface replacement is completed or the entire project is accepted by the Owner. Any subsequent settlement of the finished surface, during the warranty period, shall be considered to be a result of insufficient compaction and shall be promptly repaired by the Contractor at no cost to the Owner.

O. Maintenance of Excavated Trench. Maintain the excavated trench between any two successive valved sections of pipeline or as specified in the project Special Provisions until the following operations have been completed, to the satisfaction of the Engineer, for waterline construction: Service connections have been installed, including pressure tap; valves, valve boxes, hydrants and thrust blocks installed, hydrostatic or air testing, sterilization, cleanup and restoration of all physical features, utilities restored to their original condition, or better, and in general, all work required between the two line valves accomplished with the exception of repaving.

P. Maintenance of Trench Backfill. This maintenance shall include, but not be limited to, the addition of crushed rock backfill material to keep the surface of the backfilled trenches reasonably smooth and free from excessive ruts and potholes and suitable for normal traffic flow.

Trenches backfilled within existing paved streets shall be temporarily surfaced with 2.5 inches of cold mix asphalt pavement; which temporary cold mix surfacing shall be placed within one day of completion of trench backfilling. This temporary patch shall be installed and maintained smooth until the permanent hot mix patch is installed. Under certain circumstances, this requirement may be waived by the City Engineer.

No additional payment will be made for the maintenance of the trench backfill prior to completion of the work outlined above, and the trench backfill maintenance and shall be considered as incidental to that item of work.

Q. Disposal of Excess Excavation. All excess excavation not required or suitable for backfill shall be disposed of in a waste area arranged by the Contractor.

R. Drainage Culverts. Replace, in like kind, drainage culverts which are removed or damaged. If the pipe is damaged during removal, dispose of it and furnish and install new pipe. Dispose of culvert pipe that is in too poor condition to reuse because of age or

physical conditions. Repair drainage pipes with manufactured fittings only; encase Ferncos in concrete.

S. Blasting. Blasting shall conform to all specifications of Section 302, of the latest edition, of the Idaho Standards for Public Works Construction and amendments thereto. A copy of said specifications is available at the office of the City Engineer.

19.7 Payment

Payment shall be as described in SP-100

Payment for trench excavation and backfill will be as specified for main line pipe as follows:

A. Trench Excavation and Backfill. Payment for trench excavation and backfill shall be included in the price per linear foot of the respective pipe stated in the Contractor's bid proposal.

Payment for trench excavation and the respective backfill shall constitute full compensation for all work specified and incidental to the price per linear foot of the respective pipe.

Pipe zone backfill is specified under Section ES-20 PIPE.

B. Rock Excavation. Rock excavation shall be measured for payment as the actual quantity of rock removed within the approved limits.

ES-20. PIPE

20.1 Storm Sewer Pipe

Mains, **4-inch to 15-inch**: SDR 35 PVC ASTM D 3034, gasketed.

Mains, **18-inch to 36-inch**: Solid wall PVC ASTM F 679 or HDPE (High Density Polythylene) AASHTO M 294, smooth-walled interior, silt-tight.

Culvert Pipe: Corrugated Steel Pipe and Pipe Arches conforming to AASHTO M 36, 2-2/3" x ½ corrugations. Round pipe shall be 16 gage minimum; arch pipe shall be 12 gage minimum.

Storm Sewer Service Laterals: SDR 35 PVC ASTM D-3034, except as follows: where a service lateral crosses a water main or a water service line with less than 18 inches of clearance between the two pipes the sanitary sewer service lateral pipe shall be un-jointed PVC pressure water pipe, either Schedule 40 PVC or Class 160 PVC ASTM D-2241 for distance nominally ten feet each side of the crossing. This pressure water pipe shall be joined to standard SDR 35 PVC pipe at both ends with FERNCO couplers having stainless steel shear ring bands.

Reference ISPWC for Storm Drain Testing and CCTV Inspection Requirements per ISPWC Division 600

Reference ISPWC for Sewer Testing and CCTV Inspection Requirements per ISPWC Division 500

20.2 Sanitary Sewer Pipe

All sanitary sewer pipe shall be a minimum of eight (8) inch diameter except sewer to house connections which shall be a minimum of four (4) inch diameter.

Mains, 8-inch diameter and larger: SDR 35 PVC ASTM D-3034.

Service Laterals: SDR 35 PVC ASTM D-3034, except as follows: where a service lateral crosses a water main or a water service line with less than 18 inches of clearance between the two pipes the sanitary sewer service lateral pipe shall be un-jointed PVC pressure water pipe, either Schedule 40 PVC or Class 160 PVC ASTM D-2241 for distance nominally ten feet each side of the crossing. This pressure water pipe shall be joined to standard SDR 35 PVC pipe at both ends with FERNCO couplers having stainless steel shear ring bands.

Mains, 12-inch through 60 inch gravity sewer. CORRUGATED POLYPROPYLENE (CPP) PIPE,

1. Pipe requirements – 12-inch through 30-inch pipe shall have smooth interior and annular exterior corrugations. 30-inch through 60-inch shall be triple wall pipe and shall have smooth interior and exterior surfaces with annular inner corrugations.

a. 12-inch through 30-inch pipe – dual wall pipe, ASTM 2736

b. 30-inch through 60-inch – triple wall pipe, ASTM 2764

c. 12-inch through 60-inch pipe shall have a minimum pipe stiffness of 46 psi when tested per ASTM D2412.

2. Joint Performance

a. Pipe shall be joined with a gasketed integral bell and spigot joint meeting the requirements of ASTM F2736

b.12-inch through 60-inch pipe shall be watertight according to the requirements of ASTM D3212, with the addition of a 15 psi pressure requirement.

c.Spigot shall have two gaskets meeting the requirements of ASTM F477.

d.Gaskets shall be installed by the pipe manufacturer and shall be covered by a removable, protective wrap to ensure the gaskets are free from debris. A joint lubricant available from the manufacturer shall be used on the gasket and bell during assembly.

e.12-inch through 60-inch pipe shall have a reinforced bell with a polymer composite band installed by the manufacturer

3.Fittings

a.Fittings and connections shall provide a watertight connection according to the requirements of ASTM 3212 Gaskets when present, shall meet ASTM F477

4. Field Pipe and Joint Performance

a.To assure watertightness, field performance verification may be accomplished by testing in accordance with ASTM F1417 or ASTM F2487. Appropriate safety precautions must be used when field-testing any pipe material.

5. Material Properties

a.Polypropylene compound for pipe and fitting production shall be an impact modified copolymer meeting the material requirements of ASTM F2736 of ASTM 2764

6.Installation

a.Installation shall be per ASTM D2321 and manufacturer recommended installation guidelines.

20.3 Perforated Subsurface Drain Pipe

A. General. A perforated roadway underdrain system may be shown on the Plans and shall be furnished and installed as herein described in these Specifications, as shown on the City's Standard Construction Drawings and as shown on the Plans.

Laterals will generally be connected to the collector at 60° angles. The terminal end of each lateral will be sealed with a plug. All connections between pipe sections and branches are to be water tight.

The pipe shall be wrapped with a filtering sock.

Perforated Subsurface Drain Pipe that is corrugated on the inside will not be allowed.

Perforated pipe and fittings shall not be dumped into the trench. All pipe shall be inspected prior to lowering into the trench and if necessary cleaned of any material tending to plug the perforations of the pipe.

Pipe shall be laid with the perforations at the bottom or as per manufacturer's instructions.

Gravel backfill for drains shall be as defined under Section ES-19 TRENCH EXCAVATION AND BACKFILL.

B. Types of Pipe. Perforated subsurface drain pipe as indicated on the plans and standard drawings shall be one of the following types of pipe or as approved by the Engineer:

1.Perforated Corrugated Plastic Pipe
This pipe shall be Advanced Drainage System (ADS) N-12 pipe or approved equal. The pipe shall be 4" in diameter, having at least two (2) rows of perforations parallel to the axis of the pipe. The pipe and fittings shall meet the

requirements of AASHTO M-252 Type S (corrugated outside-SMOOTH INSIDE). The joints shall be gasketed non-water tight joints (Soil tight per AASHTO section 26); Gaskets may be architectural weather stripping material per ASTM D-1056 or rubber per ASTM F-477.

2. Perforated Solid Wall Plastic Pipe
This pipe shall be Advanced Drainage System (ADS) pipe or approved equal. The pipe shall be 4" in diameter, having at least two (2) rows of perforations parallel to the axis of the pipe. The pipe and fittings shall meet the requirements of AASHTO M-252. The joints shall be gasketed non-water tight joints (Soil tight per AASHTO section 26); Gaskets may be architectural weather stripping material per ASTM D-1056 or rubber per ASTM F-477.

20.4 Water Pipe & Ductile Iron Fittings

A. Joints. Pipe joints shall be push-on joints except where specifically shown or detailed otherwise.

B. Mechanical Joint Fittings. Three-inch through sixteen inch mechanical joint ductile iron fittings shall be Tyler SSB Class 350 ductile iron fittings, or an approved equal, and shall conform to ANSI/AWWA C-111

C. Flanged Ductile Iron Fittings. Flanged fittings shall conform to ANSI/AWWA C-110 and shall be faced and drilled to 125-pound ANSI. The fittings shall be 125 PSI rated working pressure and cement-mortar lined to same thickness specified for pipe.

D. Mechanical Couplings. Mechanical couplings, not a part of the pipe itself, shall be ductile iron couplings with long solid sleeves and be Mechanical Joint Class 350. Mechanical couplings shall mean straight couplings, transition couplings, reducing couplings, and flanged coupling adapters.

E. Ductile Iron Pipe. All ductile iron pipe shall be centrifugally cast of 60-42-10 iron and shall conform to ANSI / AWWA C-151. Thickness class or classes shall be 51(minimum). The pipe shall be cement mortar lined and seal coated in accordance with ANSI / AWWA C-104. The rubber ring gaskets shall be suitable for the specified pipe sizes and pressure and shall conform to applicable parts of the latest federal specification ANSI / AWWA C-111, and shall be furnished by the pipe manufacturer. A nontoxic vegetable soap lubricant shall be supplied with the pipe in sufficient quantities for installing the pipe.

F. Polyvinyl Chloride (PVC) Pressure Pipe. All PVC pressure pipe shall conform to pressure Class 150 AWWA C-900 or pressure Class 165 AWWA C-905. All pipe shall be push-on joints with one gasket bell end.

G. Tapping Sleeves. All tapping sleeves shall be ROMAC “SST” Stainless Steel as per ASTM A-240, Type 304 and Type 304L or an approved equal.

20.5 Pipe Laying

Pipes shall be laid in straight lines at uniform rates of grade as shown on the plans.

Proper preparation of foundation, placement of foundation material where required, and placement of pipe zone material below the pipe shall precede the installation of all sewer, water and culvert pipe. This shall include necessary leveling of the native trench bottom or the top of the foundation material as well as placement and compaction of required pipe zone material, below the pipe, to a uniform grade so that the entire length of pipe will rest firmly on a well compacted material, so the backfill material around the pipe will be placed in a manner to meet requirements specified under backfilling.

Water pipe delivered for construction shall be handled so as to minimize entrance of foreign material. When pipe laying is not in progress as, for example, at the close of a day's work, all openings in the pipeline shall be closed by water-tight plugs. Joints of all pipe in the trench shall be completed before work is stopped. If water accumulates in the trench, the plugs shall remain in place until the trench is dry.

If dirt that, in the opinion of the Engineer, will not be removed by flushing enters the pipe, the interior of the pipe shall be cleaned and swabbed as necessary with a 5% hyperchlorite disinfecting solution.

A. Backfill at the Pipe Zone. The pipe zone shall be considered to include the full width of the excavated trench from the bottom of the trench (a minimum of 4 inches under the pipe) to a point 12 inches above the top outside surface of the barrel of the pipe.

   Particular attention must be given to the area of the pipe zone from the flow line to the center line of the pipe to insure that firm support is obtained to prevent any lateral movement of the pipe during the final backfilling of the pipe zone.

   Backfill the area of the pipe zone from the bottom to the horizontal center line of the pipe with "imported pipe zone material." Hand place the material around the pipe in 6 inch layers and thoroughly hand tamp with approved tamping bars supplemented by "walking in" and slicing with a shovel.

   All material, within the pipe zone, shall be hand tamped and done in such a manner as to not change the grade of the pipe (particularly gravity pipe).

B. Joints. In making the joints on the pipe care shall be exercised to clean all dirt, rock or other foreign matter completely from the inside of the bells and the outside of the spigots. The pipe shall be forced tightly in place with a bar or mechanical puller of a type approved by the Engineer. When the pipe is aligned it shall be supported by placing sufficient backfill material alongside and carefully tamped into place as described under Section 20.5.A.

, or approved equivalent

When two different types of gravity pipe are joined together, a Fernco coupler may be used, upon approval of the Engineer. The completed connection shall be supported, in such a manner, as to maintain established line and grade and shall be encased, on all sides, with a minimum of four (4) inches of concrete. The concrete shall extend a minimum of two (2) feet on each side of the coupler.

Lubricant for water pipe gaskets shall be supplied by the pipe manufacturer.

C. Caps and Connections. Caps for pipe branches, stubs, or other open ends which are not to be immediately connected shall be made of an approved material and shall be secured in a place with a joint comparable to the main line joint, or stoppers may be of an integrally cast breakout design. Caps of the type recommended by the pipe's manufacturer shall be used.

D. ~~Imported Pipe Zone Material. Granular material for pipe zone backfill shall be 3/4" minus crushed rock unless otherwise specified. The material shall meet the specifications, of the latest edition, of the Idaho Transportation Department Standard Specifications for Highway Construction and amendments thereto.~~

ADD. 2

E. Water Main Location and Separation. The location and separation of the water and non-potable water main pipes, both horizontal and vertical, shall meet the most current requirements of IDAPA 58.01.08 – Idaho Rules for Public Drinking Water Systems.

F. Permissible Deflection at Joints - Water Pipe. Wherever it is necessary to deflect pipe from a straight line, either in the vertical or horizontal plane, to avoid obstructions or where long radius curves are permitted, the amount of deflection allowed shall not exceed the values in the following table:

*MAXIMUM DEFLECTION PERMITTED (18 FOOT LENGTH PIPE)

Bell and Spigot		Mechanical Joint	Push-on Joint	
Diameter (Inches)	Max. & Min. Deflection Angle (Degrees)	Deflection (Inches)	Max. Deflection Angle (Degrees)	Deflection (Inches)
6	7-07	27	5	19
8	5-21	20	5	19
10	5-21	20	5	19
12	5-21	20	5	19
14	3-35	13 ½	3	11
16	3-35	13 ½	2	11
18	3-00	11	3	11
20	3-00	11	3	11
24	2-23	9	3	11

*The maximum deflection shall be whichever is less, the table or that recommended by pipe manufacturer.

G. Anchorage (water pipe)

1. Limiting Pipe Diameter and Degree of Bend
On all pipelines 6 inches in diameter or larger, securely anchor by suitable thrust blocking all tees, plugs, caps, and bends where unbalanced forces exist, as directed by the Engineer.

2. Thrust Blocking
Provide thrust blocks as required by the Standard Construction Drawings. The concrete mix shall have a compressive strength of not less than 2500 psi. Place blocking between the undisturbed ground and the fitting to be anchored; plastic sheathing to be placed between the concrete and fitting. The bearing surface shall be as shown or as directed by the Engineer. Place the blocking so that the pipe and fitting joints will be accessible to repairs, unless otherwise shown.

3. Metal Tie Rods
Metal tie rods, if specifically required by the Plans or the Engineer, shall be used in conjunction with thrust block. The rods, nuts and washers shall be coated with a rust resistant coating. (A product intended for such use.)

20.6 Pipe Testing and T. V. Inspection

A. Sanitary Sewer Pipe. The finished sanitary sewer shall be tight against leakage from either the inside or the outside of the pipe.

All wyes, tees, and stubs shall be plugged with flexible jointed caps, or acceptable alternate, securely fastened to withstand the internal test pressure. Such plugs or caps shall be readily removable, and their removal shall provide a socket suitable for making a flexible jointed lateral connection or extension.

ADD. 1

Exfiltration testing of the sanitary sewer pipe will be conducted by the Contractor, under the supervision of the Engineer, or his/her representative, after the sewer line is backfilled. The Contractor shall notify the Engineer at least twenty-four (24) hours in advance of his/her intention to pressure test the line.

If the test indicates that there is excessive leakage in the line the Contractor shall make repairs, at his/her own expense, and take such corrective action as may be required by the Engineer.

T.V. inspection of the sanitary and storm sewer pipe will be conducted by the City after the pipe has been backfilled and the manholes are accessible.

1. Exfiltration Test (Using Air)

Water pipe flushing, disinfection, testing, sampling, and bacteriological testing will be performed by the City of Moscow. Testing, flushing, and disinfection will be performed per the City of Moscow Flushing, Disinfection, and Testing Plan and the City of Moscow Standard Specifications.

ADD. 1

The Contractor shall plug all openings in the pipe and supply necessary metering equipment and hoses for the test and a blower or compressor with adequate capacity to perform the test.

Immediately following the pipe cleaning, the pipe installation shall be tested with low pressure air. Air shall be slowly supplied to the plugged pipe installation until the internal air pressure reaches four (4) pounds per square inch greater than the average back pressure of any ground water that may submerge the pipe as determined by the Engineer.

At least two minutes shall be allowed for temperature stabilization before proceeding further. The inspector will then accurately determine the time of loss of one (1) psi. This time interval shall not be less than the time interval determined in the following formula.

$$T = 0.0109\ D2L$$

T = time in seconds
D = nominal inside diameter of pipe in inches
L = length of pipe in feet

Failure to meet or exceed the computed time interval for the loss of of one (1) psi will be cause for rejection of the sewer pipe.

All repairs necessary to meet these requirements and/or testing will be at the expense of the Contractor.

The maximum length of sewer pipe, for the above tests, shall be the distance between consecutive manholes. Any section of sewer pipe, between any two manholes that does not meet the above requirements, shall be rejected.

2. <u>T.V. Inspection</u>
T.V. inspection, (by the City), of the newly installed sanitary and storm sewer pipes will be required, preferably, before the placement of asphalt on the roadway. It shall be the responsibility of the Contractor to give the Engineer ample advance notice of the time when this inspection is to be performed to assure the timely scheduling of the City's personnel and equipment.

Any and all imperfections (i.e. sags in the pipe invert, joints not fully seated, offset joints, poor manhole entries and exits, etc.) found in the installation of the pipe shall be immediately repaired by the Contractor at no cost to the City. Such repairs shall be as allowed and directed by the City Engineer.

B. Water Pipe

All new watermain shall pass City standard pressure testing and bacteriological testing. Pressure testing, flushing, disinfection, and bacteriological testing shall be performed by the City Water Department. All testing, flushing, and disinfecting materials and labor costs of the City's must be paid by the Contractor. It is the Contractor's responsibility to repair all leaks. The test pressure shall be 1-½ times the working pressure of the pipe per AWWA standards. The bacteriological test criteria shall be as follows: one test showing "absence" of coliform bacteria (<1) and a standard plate count of less than 100. The Contractor shall be responsible for all excavation and back fill necessary to allow the City Water Department access to the new main for the City to furnish, install, and remove all corporation stops necessary to test, chlorinate, and bacteriological sample the new main as required. This includes backfill and trench surfacing once and then returning to the site to re-excavate and re-backfill (including cold mix patching) any corporation stops that remain in the main during disinfecting and sampling procedure. Where connections are made to existing mains the fitting and pipe shall be thoroughly cleaned and spray disinfected with 150(+) ppm chlorine solution immediately prior to their installation and such procedure shall be witnessed by a representative of the City; such operations by the contractor require the City to be notified a minimum of 48 hours in advance. The 48 hour notice is necessary to allow the City crew to notify customers of the water outage. The contractor shall be responsible for coordinating and cooperating with the City Water Department for testing, flushing, and disinfecting activities.

20.7 Plugging Existing Pipe

Where shown in the Plans or where designated by the Engineer, existing pipes shall be plugged on the inlet end for a distance of 2 diameters with commercial concrete. Care shall be used in placing the concrete in the pipe to see that the opening of the pipe is completely filled and thoroughly plugged.

20.8 Basis of Payment

A. Storm Sewer Pipe. The accepted quantities of storm sewer pipe will be paid for by the unit price per linear foot and shall include all costs incidental to furnishing and laying pipe, as herein described, including furnishing and installing lock bands at each joint and all pipe zone material.

B. Sanitary Sewer Pipe. The accepted quantities of sanitary sewer pipe will be paid for by the unit price per linear foot and shall include all costs incidental to furnishing and laying pipe. The cost of furnishing all pipe zone material is also included in this item.

C. Perforated Sub-surface Drain Pipe. The accepted quantities of subsurface drain pipe will be paid for by the unit price per linear foot and shall include all costs incidental to furnishing and laying pipe, as herein described, including all angle branches, plugs, pipe connectors, and all pipe zone material.

Payment shall be as described in SP-100

D. Water Pipe & Ductile Iron Fittings. Payment for main line water pipe, including fittings, thrust blocks and couplings will be made at the unit price per linear foot.

E. Plugging existing pipes will be measured per each, for each plug installed, for pipe diameters up to and including 36 inches. The concrete for plugging pipes in excess of 36 inches in diameter will be measured by the cubic yard. Computations for corrugated metal pipes will be based on the nominal diameter.

The measurement for payment will be the field measured centerline length of the pipe in place within the limits shown. Laying lengths of valves, fittings and couplings will be included. Payment for fittings, couplings and thrust blocks shall be considered incidental to the cost of the respectively-sized pipe.

Payment for valves will be made at a per each unit price.

ES-21 GATE VALVES AND VALVE BOXES

21.1 Scope

This section covers the work necessary for furnishing and installing the gate valves and valve boxes, complete.

21.2 Materials

A. Gate Valves (all sizes). Valves shall be ductile iron AMERICAN FLOW CONTROL SERIES 2500 resilient seated valves, or an approved equal, and shall open when the stem is rotated counterclockwise. Unless otherwise shown, valves shall have 2-inch square wrench nut. Valve ends and valve sizes shall be shown. Valves shall conform to ANSI / AWWA C-509.

B. Valve Boxes. Valve boxes for valves 12" in size and smaller shall be Buffalo 2-piece slip - type, cast iron with 5-1/4 inch shaft, and shall be TYLER 6855 series of appropriate length for the installation, or approved equal. Valve boxes for valves over 12" in size shall be Buffalo 3-piece sliding type cast iron with 5-1/4 inch shaft and shall be TYLER 6855 series of appropriate length for the installation or approved equal. The word "Water" shall be cast into the top of the lids. Extension pieces, if required, shall be the manufacturer's standard type for use with the valve boxes.

C. Extension stems for valve operators. Where the depth of the opening nut is more than 4.5 feet, standard operating extensions shall be provided to bring the operating nut to a point 3.5 feet below the surface of the ground or pavement. The extension stem shall be constructed of steel (and coated).

21.3 Workmanship

A. Valves. Before installation, the valves shall be thoroughly cleaned of all foreign material, and shall be inspected for proper operation for both opening and closing, and to verify that the valves seat properly. Valves shall be installed so that the stems are vertical, unless otherwise directed by the Engineer. Jointing shall conform to AWWA C-600 or AWWA C-603, whichever is applicable. Valves shall be installed in accordance with "Standard Details". Joints shall be tested with the adjacent pipeline. If joints leak during the test, valves shall be disconnected and reconnected, and the valve and/or the pipeline retested.

Faces of flanges shall be cleaned thoroughly before flanged joint is assembled. After cleaning, the gasket shall be inserted and the nuts tightened uniformly around the flange. If flanges leak under test, the nuts shall be loosened, the gasket reset or replaced, the nuts retightened, and the valve and/or pipeline retested.

Valves on all service connections and stubouts, 4 inch and larger, shall be mechanical joint and shall be restrained with coated tie rods.

B. Valve Boxes. Center the valve boxes and set plumb over the wrench nuts of the valves. Set valve boxes so that they do not transmit shock or stress to the valves. Set the valve box covers flush with the surface of the finished pavement as shown, or such other level as may be ordered by the Engineer. Cut extensions to the proper length so that the valve box does not ride on the extension when set at grade.

Backfill shall be the same as specified for the adjacent pipe. Place backfill around the valve boxes and thoroughly compact to a density equal to that specified for the adjacent trench and in such a manner that will not damage or displace the valve box from proper alignment or grade. Misaligned valve boxes shall be excavated, plumbed, and backfilled at the Contractor's expense.

Valve boxes shall be clean prior to final project acceptance.

21.4 Payment

Payment shall be as described in SP-100

~~Payment for gate valves furnished and installed, complete, with valve boxes will be by the unit prices per each. Payment for the gate valves and valve boxes shall constitute full compensation for the work as specified under this section.~~

~~Payment for gate valves and valve boxes furnished and installed as auxiliary valves on hydrants shall be included in the unit price for hydrants.~~

ES-22. FIRE HYDRANTS

22.1 Scope

This section covers the work necessary for furnishing and installing the fire hydrants, complete, and the work necessary for the removal of existing hydrants.

22.2 Materials

A. Low Pressure Hydrants. Hydrants to be corey pattern with nominal 5-1/4 inch main valve opening with 6 inch bottom connections. Equip with two 2-1/2 inch hose nozzles and one 4-1/2 inch pumper port with a 5 inch Storz hose nozzle. The Storz nozzle shall be an integral part of the fire hydrant and must be furnished by the manufacturer or authorized distributor designated by the manufacturer. Storz adapters will not be accepted. Operating nut shall be equipped with O-ring seals and shall open when turned to the left or counterclockwise. Hydrants shall be of the break-flange or safety-top type. Hydrants shall conform to AWWA C-502, and these Specifications. The depth of bury will generally be 5 feet; and as required to accommodate site conditions. Nozzle threads shall be American National Standard. The hydrant isolation valve shall be attached to the tee at the main and all of the piping shall be restrained from the tee to the hydrant with flanged fittings, retaining glands (mega lugs, etc.) or tie rods as approved by the City Engineer. Hydrants shall be factory painted or may be painted by the contractor using a high quality industrial enamel high intensity red paint above the ground line; spray can paint will not be allowed.

B. Manufacturer, “Model”: Waterous, “Pacer” or Mueller, “Centurian”

C. Base Block. Solid precast concrete pier block having nominal dimensions of 8-inch thickness by 15-inch square base.

D. Drain Rock. Washed 1-1/2 inch crushed rock or graded river gravel free of organic matter, sand, loam, clay, and other small particles that will tend to restrict water flow through the gravel.

E. Concrete for Thrust Blocking. City Standard per ES-11 CONCRETE.

F. Thrust Ties. 3/4 inch diameter steel rods and duc-lugs as manufactured by Stellar Corporation, Columbus, Ohio, or approved equal. Rods shall have rust resistant protective coating.

G. Auxillary Gate Valve. See City Standard ES-21 GATE VALVES AND VALVE BOXES.

22.3 Workmanship

Construction and installation shall conform to the detail on the Plans and to provisions of Sections 11 and 12 of AWWA C-600, except where otherwise specified.

A. Location and Position. Locate as shown or directed so as to provide complete accessibility and minimize possibility of damage from vehicles or injury to pedestrians. A 3-foot clear space shall be provided and maintained around the circumference of the hydrant or as approved by the Engineer. Where hydrants are subject to impact by a motor vehicle, guard posts other approved means shall be provided as approved by the Engineer. Improperly located hydrants shall be disconnected and relocated, at the Contractor's expense.

   When placed behind the curb, set hydrant barrel so that the face of the pumper or hose nozzle cap will be 2 feet from the back of the curb. When set in lawn space between curb and sidewalk, or between sidewalk and property line, let no portion of the hydrant or nozzle cap be within 12 inches of the sidewalk.

   Set all hydrants plumb and nozzles parallel with, or at right angles to the curb, with the pumper nozzle facing the curb. Set hydrants so that safety flange is a minimum of 3 inches and maximum of 6 inches above finished ground or sidewalk level to clear bolts and nuts, and as directed.

B. Excavation. Do not carry below sub-base grade. Replace over-excavated areas with gravel, and hand tamp to provide firm foundation.

C. Base Block. Place on firm level sub-base to assure uniform support.

D. Installation of Hydrants. Place hydrant carefully on base block to prevent the base block from breaking. After hydrant is in place and connected to the pipeline, place temporary blocks to maintain the hydrant in a plumb position during subsequent work.

E. Drain Rock. Place gravel around base block and hydrant bottom after hydrant has been blocked in place. Drain gravel shall be not less than 6 inches above hydrant drain opening. Do not connect drainage system to sewer.

F. Concrete Thrust Blocking. Place after hydrant is blocked in its final position and hydrant is joined to pipe. Concrete thrust block shall have a minimum of 4 square feet of bearing area against undisturbed earth. Restraint devices such as flanged fitting, mega lugs, or tie rods may be used in lieu of thrust blocks if approved by the City Engineer.

G. Bury Depth and Thrust Ties. The ground surface around fire hydrants shall be as follows:

   1. Behind the hydrant: The ground surface shall be a minimum of 4.5 feet above the hydrant base (as measured from 'level') for a distance of at least 10 feet behind the back of the hydrant. The City Engineer may approve a lesser bury requirement if thrust ties consisting of two ¾ inch coated steel tie rods connecting

180

the hydrant to the valve and the main are utilized. All earthen fill behind hydrants for a minimum distance of 10 feet shall be compacted full depth to a minimum of 95% of AASHTO T~~99~~ proctor value.

2. Sides of the hydrant: The ground surface shall be a minimum of 4.5 feet above the hydrant base (as measured from 'level') for a distance of at least 6 feet from the centerline of the hydrant barrel. All earthen fill at the sides of the hydrant for a minimum distance of 6 feet shall be compacted full depth to a minimum of 95% of AASHTO T~~99~~ proctor value.

180

3. Front of the hydrant (towards the main): 4.0 foot minimum cover over the hydrant lateral pipe shall be maintained – as shown on the City of Moscow Standard Construction Drawings.

~~Payment for existing fire h~~ Payment shall be as described in SP-100 ~~ice stated in the Contractor's bid proposal~~ ~~in and on the plans~~.

H. Existing Fire Hydrant Removal. Remove fire hydrants on existing city mains as shown on the plans and as directed by the Engineer. The hydrants shall remain the property of the City of Moscow and shall be stockpiled, for the City, at a location to be determined. Care shall be taken so as not to damage the hydrants during removal, transporting, or stockpiling.

22.4 Payment

Payment shall be as described in SP-100

~~Payment for fire hydrants furnished and installed will be by unit price per each. Payment for fire hydrants shall constitute full compensation for all work specified under this section, and shall include the auxiliary gate valve and connecting pipe from the main line to the valve, and all trench excavation and backfill from the main to the hydrant.~~

~~Payment for existing fire hydrant removal will be made at the per each unit price.~~

ES-23. STORM AND SANITARY CONNECTIONS

23.1 Materials

A. Sewer house connections, where required on the plans or ordered by the Engineer, shall be a minimum of four (4) inch diameter pipe. The pipe shall conform to Specification ES-8.2, Sanitary Sewer Pipe, except that it shall be green in color.

B. Pipe zone material, unless otherwise specified, shall be 3/4 inch minus crushed rock, pea gravel, or clean sand.

23.2 Workmanship

A. The sewer house connections shall be branched from the main sewer line by a Y branch on new mains; by a ROMAC style "CB' saddle on existing sewer mains. Branches shall

be placed where indicated on the plans or as ordered by the Engineer, and shall be installed, at a point, above the centerline of the sanitary sewer main.

B. ROMAC style “CB” saddles shall be furnished and installed by the City and paid for by the contractor.

C. Sanitary sewer services shall not be connected to manholes.

D. Maximum deflection permissible with any one fitting shall not exceed 45 degrees and shall be accomplished with long-radius curves or bends. Short-radius elbows or curves will not be permitted except by approval of the Engineer.

E. Provide ends of all sewer house connection lines with standard watertight plugs, suitably braced to prevent blowoff during internal hydrostatic or air testing. With all plugs in place, test the sanitary sewer lines in accordance with ES-20.6, Pipe Testing and T.V. Inspection.

F. After the line has been tested by the Contractor and accepted by the Engineer, the Contractor shall furnish and install an approved marker, as per City of Moscow Standard Drawings, to identify the ends of the sewer stubs. The marker shall be wrapped with detectable sewer tape.

G. Conform to applicable portions of Section ES-19 Trench Excavation and Backfill and Section ES-20.2 Sanitary Sewer Pipe.

H. Backfill the pipe zone with granular pipe zone material, hand-placed simultaneously on both sides of the pipe for the full trench width and hand-tamped with approved tamping bars supplemented by 'walking in' and slicing with a shovel.

I. Backfill, above the pipe zone, shall conform to applicable portions of Section ES-19 Trench Excavation and Backfill. Do not backfill sewer house connection pipe until inspected and approved by the Engineer.

J. All denuded areas shall be fertilized, re-sown with grass seed and covered with mulch as specified in Sections ES-27 and ES-28.

K. Install as per the Standard Construction Drawings.

L. Separation of storm and sanitary sewer service laterals from water mains and water service lines shall conform to the requirements of Idaho Drinking Water Standards.

23.3 Basis of Payment

A. Trench excavation and backfill, required under this item, will be paid for as incidental to the price per linear foot of pipe stated in the Contractor's bid proposal. Payment for that

item shall constitute full compensation for all work connected with excavation and backfill.

B. Sewer house connection pipe, in place, will be paid for on the unit price per linear foot for the appropriate size of pipe stated in the Contractor's bid proposal. Payment for this item shall constitute full compensation for all materials and work required to install the sewer house connection pipe, complete, including trench excavation and backfill. The length of the house connection will be based on the total length of pipe installed, including all fittings, measured along the pipe center line.

ES-24. STREET / ALLEY CUT REPAIR

All excavations in to existing City street paving shall be repaired in accordance with the City's adopted STREET / ALLEY CUT REPAIR policy and as per Standard Construction Drawing entitled STREET /ALLEY CUT REPAIR.

ES-25. EROSION AND SEDIMENT CONTROL

All construction in the City involving earthwork shall comply with all of the requirements of City Code Section 7-1-4 pertaining to Erosion and Sediment Control and the City of Moscow EROSION AND SEDIMENT CONTROL STANDARDS adopted by resolution.

The Contractor shall implement appropriate erosion control eliminating sediment transport to City infra-structure and private property. The Contractor shall pay all costs associated with sediment removal from City infra-structure, private property or environmental remediation.

All sediment control devices shall be installed prior to any ground disturbing activity.

ES-26 STORMWATER RUNOFF CONTROL

All construction and development activity in the City shall comply with all of the requirements of City Code Section 5-15 STORMWATER RUNOFF CONTROL and including Moscow STORMWATER RUNOFF CONTROL STANDARDS adopted by resolution.

ES-27. IMPORTED TOPSOIL

27.1 General

Imported topsoil shall possess friability and a high degree of fertility. It shall be free of clods, roots, gravel and other inert material. It shall be free of quack grass, horsetail and other noxious vegetation and seed. Should such regenerative material be present in the soil, it shall be the responsibility of the Contractor to remove all such growth, both surface and root, which may appear in the planting within one year following acceptance of the job at his/her own expense and in a manner satisfactory to the Owner.

27.2 Payment

Payment shall be as described in SP-100

~~Payment for furnishing and placing imported topsoil shall be paid according to the unit price bid on the Contractor's bid proposal form or as noted as set forth in the Contract documents.~~

ES-28. SEEDING, SOD, AND INFIELD SURFACE RESTORATION

28.1 Seed

Seed furnished shall be labeled; true as to variety; noxious weed-free; and meet all purity, germination specifications, and standards of the Federal Seed Act and Idaho State Seed Laws. ~~The variety shall be as required to best satisfy the particular application - as approved by the City Engineer.~~

The variety shall be as specified, submitted to and approved for use.

28.2 Application

Seed all cut and fill slopes and all other denuded areas where any earthwork has occurred. Seeding shall be done in accordance with Section 621 of the latest edition of the Idaho Transportation Department Standard Specifications for Highway Construction, including all amendments thereto.

28.3 Fertilizer

Fertilizer shall be commercial grade and used in the seeding application in accordance with Section 621 of the latest edition of the Idaho Transportation Department Standard Specifications for Highway Construction, including all amendments thereto.

28.4 Mulch

Mulch shall be used in the seeding operation and shall consist of furnishing and placing mulch in accordance with Section 621 of the latest edition of the Idaho Transportation Department Standard Specifications for Highway Construction, including all amendments thereto.

28.5 Seedbed Preparation

Preparing the surface area to be seeded is part of the seeding operation and shall be done in accordance with Section 621 of the latest edition of the Idaho Transportation Department Standard Specifications for Highway Construction, including all amendments thereto.

28.6 Payment

Payment shall be as described in SP-100

~~Seeding will be paid for as allowed and described in the project specific contract documents; which may include, but not limited to, the following methods of payment: unit price per unit area; lump sum amount; incidental to other item unit prices; included in a project lump sum amount.~~

ES-29. TREE TRIMMING

Any tree, within the construction area, whose branches, trunk or roots must be removed in order to complete the work, should be trimmed, as directed by the Engineer. All costs for such trimming shall be noted as set forth in the Contract documents. **ALL TREE TRIMMING SHALL CONFORM TO THE APPLICABLE SECTIONS OF THE COMMUNITY FORESTRY ORDINANCE**.

ES-30. INSPECTION

Work performed under this contract shall be inspected at various stages of progress. These inspections include, but shall not be limited to the following:

A. After storm sewer lines, sanitary sewer lines, perforated drain lines and their structures are in place, but before any backfilling is started.

B. Prior to and during the placement of all concrete. This inspection shall be requested when the forms are in place and ready to receive the concrete.

C. After the street has been excavated and compacted, but before any crushed rock is placed.

D. During the application and processing of the crushed rock base and after the crushed rock base has been placed and compacted, but before the prime coat is applied.

E. After valve boxes, catch basins, manholes and monuments have been adjusted to the proper elevation.

F. Prior to and during the placement of prime coat and tack coat.

G. Prior to and during the placement of all superpave hot mix asphalt pavement.

H. At the completion of the job, after all cleanup, backfilling and all other work is done and job is ready for final acceptance.

It shall be the responsibility of the Contractor to notify the Engineer, or his/her representative, when the various phases of the project are ready for inspection.

Request for inspection may be verbal but shall be given in sufficient time to allow the Engineer, or his/her representative, to arrange to be present as required. Failure to notify the Engineer, or his/her representative, of the inspections shall be sufficient ground to reject the uninspected work and cause its immediate removal.

All discrepancies, indicated by the inspector, shall be corrected by the Contractor and re-inspected before the next phase of operation is started. No claim shall be made for delays caused by correction of work found unacceptable to the inspector.

ES-31. WORKMANSHIP AND CLEAN UP

It is the intent and purpose of these Specifications and Plans to obtain good workmanship throughout with the completed work complying with the said Specifications and Plans and in full working order upon completion. Work will not be accepted until this result is obtained.

All debris or rubbish caused by the contractor's operations shall be removed and the areas occupied during such operation shall be left in a neat and presentable condition.

Any damage to private property shall be repaired, replaced in kind, as approved by the City Engineer or the Owner compensated as required by the General Specifications.

Upon the satisfactory completion of all work embraced in the contract and specifications, including the cleanup, together with full compliance with the requirements of the General Specifications the Engineer will, within fifteen (15) days after such completion and compliance, issue a certificate of completion to the Owner with two (2) copies to the Contractor.

ES-32. MOBILIZATION

This item shall consist of preparatory work and operations, including but not limited to, those necessary for the movement of personnel, equipment, supplies and incidentals to the project site; for the establishment of offices, buildings and other facilities necessary for the work on the project; for premiums on bond and insurance for the project; for all other work and operations which must be performed or costs incurred before beginning production work on the various contract items. Mobilization cost for subcontracted work shall be considered to be included in the prices bid by the prime Contractor.

~~The amounts to be allowed fo~~ Payment shall be as described in SP-100 ~~made under the contract will be made as follows:~~

1. ~~Sixty percent of the amount bid for mobilization will be paid on the first monthly progress estimate.~~
2. ~~Forty percent of the amount bid for mobilization will be paid on the second monthly estimate providing that the contractor has initiated productive work on the project.~~

~~Mobilization will be measu~~ Payment shall be as described in SP-100 ~~n on the Contractor's Proposal~~

THIS PAGE WAS INTENTIONALLY LEFT BLANK

APPROVED BY MOSCOW CITY COUNCIL
APRIL 7, 2014, RESOLUTION 2014-06

CITY OF MOSCOW 1887 IDAHO

STANDARD CONSTRUCTION DRAWINGS

PUBLIC WORKS
ENGINEERING DEPT.
221 E. SECOND ST.
(208) 883-7034

"CALL BEFORE YOU DIG" 811

STANDARD CONSTRUCTION DRAWINGS TABLE OF CONTENTS

1a	LOCAL STREET - (36' Street)	18	SUBSURFACE DRAINAGE
1b	ALTERNATE LOCAL STREET - (28' Street)	19	STREET MONUMENT
1c	COLLECTOR	20	SURVEY MONUMENT
1d	COLLECTOR WITH LEFT TURN LANE	21	STORM SEWER MANHOLE
1e	COLLECTOR PARKING DETAIL	22	SANITARY SEWER MANHOLE
1f	MINOR ARTERIAL	23	SHALLOW SANITARY MANHOLE
1g	MINOR ARTERIAL WITH LEFT TURN LANE	24	STORM & SANITARY MANHOLE RING & COVER
1h	LARGE LOT SUBDIVISION STREET	25	MANHOLE BASE DETAILS
2	ALLEY STANDARD	26	CATCH BASIN & CATCH INLET
3	PRIVATE STREETS	27a	CURB & GUTTER PAN
4	CUL-DE-SAC DETAILS	27b	COMBINATION INLET
5	TEMPORARY TURNAROUND	27c	CATCH BASIN & INLET TYPE 'A' GRATE
6	CURBS & GUTTERS	27d	CATCH BASIN & INLET TYPE 'B' GRATE (Rolled Curb)
7	SIDEWALKS & PATHWAYS	28	SANITARY & STORM SEWER SERVICE CONNECTIONS
8	PEDESTRIAN RAMPS	29	WATER SERVICE CONNECTIONS
9	DRIVEWAY APPROACHES	30	FIRE HYDRANT ASSEMBLY
10	CEMENT CONCRETE PAVEMENT	31	WATER MAIN THRUST BLOCKING
11	PARKING LOT STANDARDS	32	WATER MAIN CREEK CROSSING
12	DRIVEWAY GRADE LIMITATIONS	33a	BACKFILL - CLASS A & B
13	UTILITY & MAILBOX LOCATIONS	33b	BACKFILL - CLASS C & D
14	FRANCHISE UTILITY DETAILS	33c	BACKFILL - CLASS E & F
15	RESIDENTIAL STREET LIGHTING	34	STREET / ALLEY CUT REPAIR
16	END OF ROAD MARKERS & DEAD END SIGNS	35	SILT FENCE
17	INTERSECTION SIGHT TRIANGLE	36	CONSTRUCTION ENTRANCE AND INLET PROTECTION

A.S.T.M.	AMERICAN SOCIETY FOR TESTING & MATERIALS
AASHTO	AMERICAN ASSOCIATION OF STATE HIGHWAY AND TRANSPORTATION OFFICIALS
A.D.A.	AMERICAN DISABILITIES ACT
AGGR.	AGGREGATE
C.I.	CAST IRON
CL.	CLASS
CMP	CORRUGATED METAL PIPE
COMP.	COMPACTED or COMPACTION
CONC.	CONCRETE
D.I.	DUCTILE IRON
DIA.	DIAMETER
I.D.	INSIDE DIAMETER
FLG.	FLANGE
G.V.	GATE VALVE
JT.	JOINT
MECH.	MECHANICAL
M.J.	MECHANICAL JOINT
MUTCD	MANUAL ON UNIFORM TRAFFIC CONTROL DEVICES
O/C	ON CENTER
OSHA	OCCUPATIONAL AND SAFETY HAZARD ASSOCIATION
R	RADIUS
R/W	RIGHT-OF-WAY
SPEC.	SPECIFICATION
STA.	STATION
SL.	SLOPE
THK.	THICK
TYP.	TYPICAL
WSDOT	WASHINGTON STATE DEPARTMENT OF TRANSPORTATION

	AGGREGATE		METAL
	CONCRETE	NOTE:	
	EARTH	② CIRCLED NUMBERS HEREIN THESE STANDARDS INDICATE A NOTE REFERENCE	
	PAVEMENT		

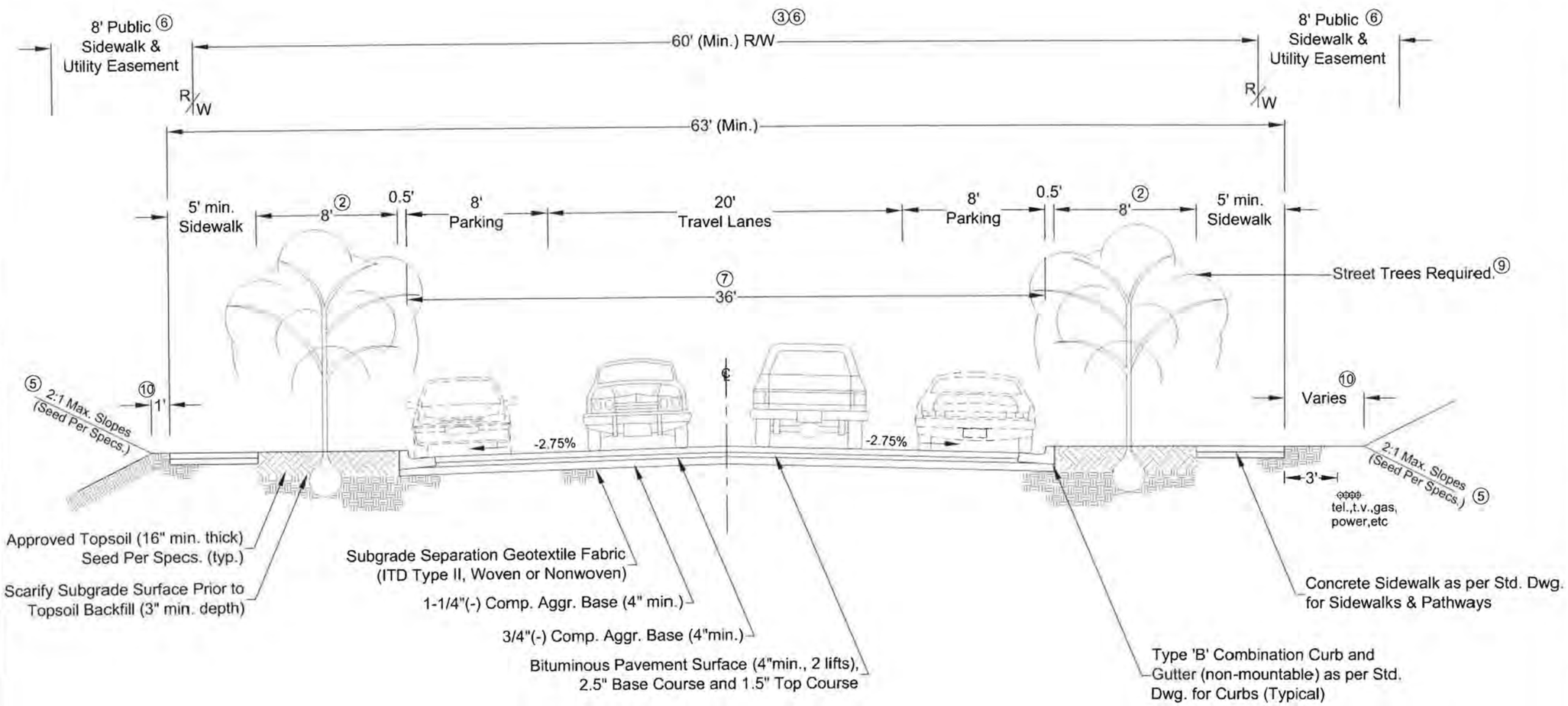

Notes:

1. This street section should be used as the minimum standard for all streets not classified as Collector or Arterial, or under conditions in which the Standard Drawing for Alternate Local Street (28' Street) is allowed.
2. The eight foot (8') wide green strip may be narrowed to a minimum width of five feet (5') in areas of excessive cuts and fills, as approved by City Engineer.
3. Center streets in platted right-of-way, unless approved otherwise by the City Engineer. Additional right-of-way shall be required as necessary to accommodate topography, utilities, or other needs as determined by the City Engineer.
4. Compact all subgrade and base aggregate to 95% of AASHTO T99 max. proctor density.
5. Seed all roadside backfill and excavations as per Standard Specifications.
6. Wider platted rights-of-way allow narrower easements, proportionately. Additional easements may be required as necessary.
7. Maximum street centerline profile grade shall equal 10.0% or as approved by the City Engineer.
8. Subgrade underdrain systems are required in inherently "wet" areas, as specified by the City Engineer, see Standard Drawing for Subsurface Drainage.
9. Tree selection and planting shall comply with the City's Arboricultural Standards and Specification Guide.
10. This dimension shall be four feet (4') where standard franchise utility pedestals (excluding transformers) are to be located and shall be six feet (6') where pedestals and an AVISTA power transformer pad is required (see Standard Drawing for Franchise Utility Details).

REVISIONS	
DATE	DESCRIPTION

PROFESSIONAL ENGINEER REGISTERED 8832 5-19-14 STATE OF IDAHO KEVIN LILLY

DRAFTED BY: C.Edwards
CHECKED BY: K.Lilly
DRAWING SCALE: NTS
DATE: 3-31-2014

Local Street (36' Street)

CITY OF MOSCOW
ENGINEERING DEPARTMENT

DRAWING NUMBER: 1a

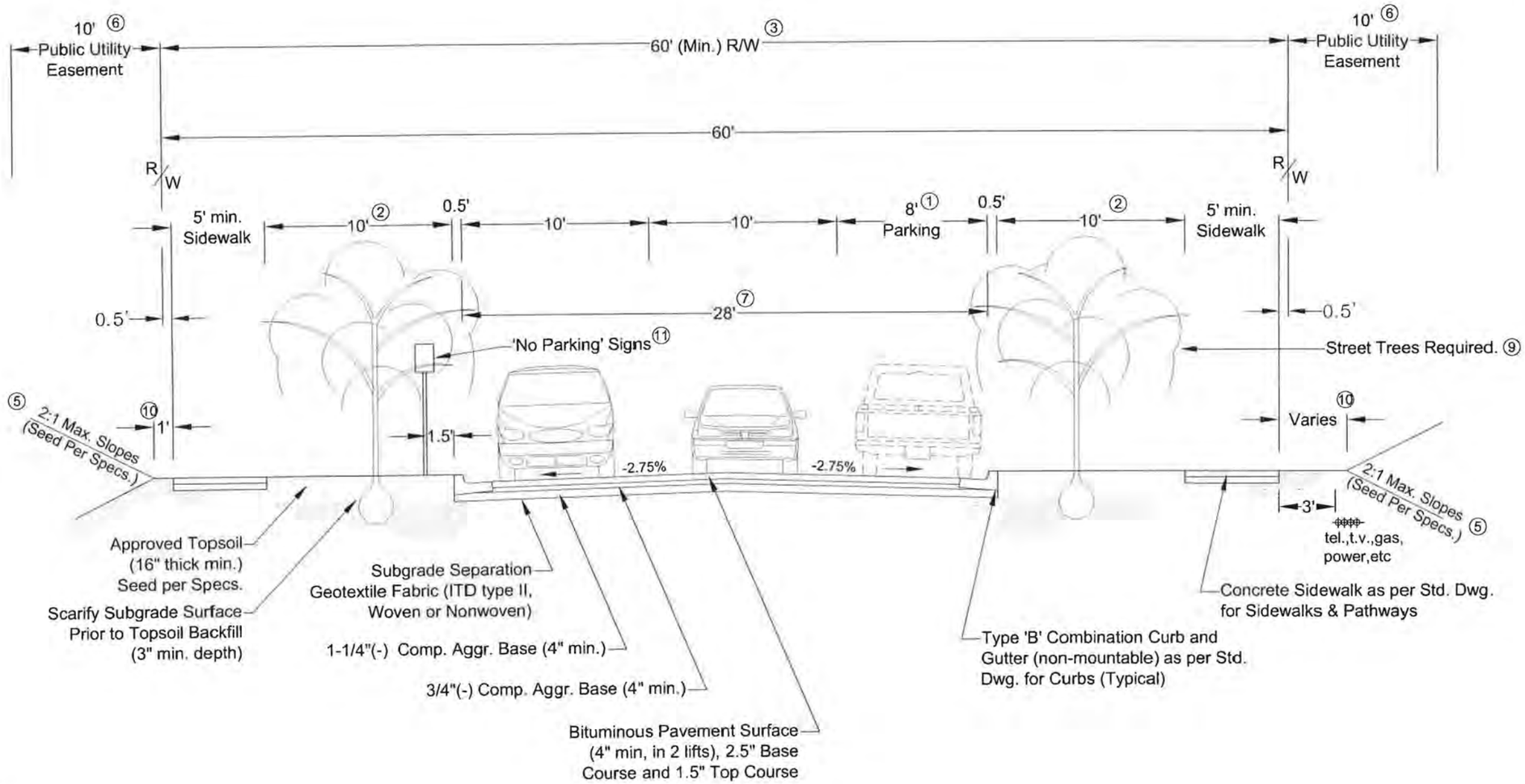

Notes:

1. Use of this street standard shall be limited to cul-de-sacs and one to two block unextendable streets. In addition, this standard shall only be used in Residential Zones unless otherwise approved by the City Engineer. Engineering plans for subdivisions must specify on which side of street parking will be allowed.
2. The 10' wide green strip may be narrowed to a minimum width of five feet (5') in areas of excessive cuts and fills, as approved by City Engineer.
3. Center streets in platted right-of-way, unless approved otherwise by the City Engineer. Additional right-of-way shall be required as necessary to accommodate topography, utilities, or other needs as determined by the City Engineer.
4. Compact all subgrade and base aggregate to 95% of AASHTO T99 max. proctor density.
5. Seed all roadside backfill and excavations as per Standard Specifications.
6. Wider platted rights-of-way allow narrower easements, proportionately. Additional easement may be required as necessary.
7. Maximum street centerline profile grade shall equal 10.0% or as approved by the City Engineer.
8. Subgrade underdrain systems are required in inherently "wet" areas, as specified by the Engineer, see Standard Drawing for Subsurface Drainage.
9. Tree selection and planting shall comply with the City's Arboricultural Standards and Specification Guide.
10. This dimension shall be four feet (4') where standard franchise utility pedestals (excluding transformers) are to be located and shall be six feet (6') where pedestals and an AVISTA power transformer pad is required (see Standard Drawing for Franchise Utility Details).
11. All signs to be furnished and installed by 'Developer.' Signs and installation to be in accordance with MUTCD.

REVISIONS	
DATE	DESCRIPTION

PROFESSIONAL ENGINEER REGISTERED 8832 5-19-14 STATE OF IDAHO KEVIN LILLY

DRAFTED BY: C.Edwards
CHECKED BY: K.Lilly
DRAWING SCALE: NTS
DATE: 3-31-2014

Alternate Local Street (28' Street)

CITY OF MOSCOW
ENGINEERING DEPARTMENT

DRAWING NUMBER: 1b

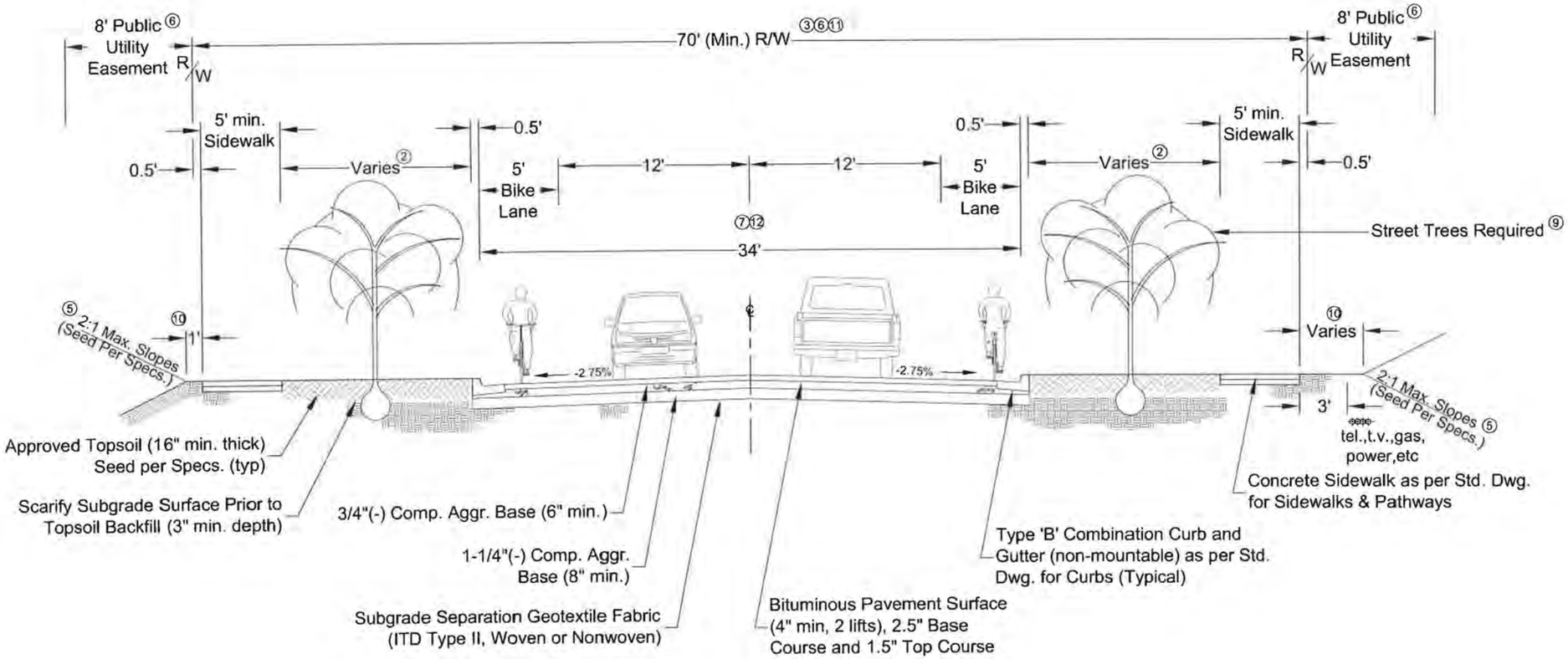

Notes:

1. This street section shall be used as a minimum standard for Collector class streets in all zones or for other high volume Collector streets where on-street parking is not considered essential and future travel lanes are not anticipated.
2. The green strip may be narrowed to a minimum width of five feet (5') in areas of excessive cuts and fills, as approved by City Engineer.
3. Center streets in platted right-of-way, unless approved otherwise by the City Engineer. Additional right-of-way width shall be required as necessary to accommodate topography, utilities, turn lanes, roundabouts, signalized intersections, or other needs as determined by the City Engineer. Additional right-of-way required for transit stops at Minor Arterial and Collector intersections or every thousand feet (1000').
4. Compact all subgrade and base aggregate to 95% of AASHTO T99 max. proctor density.
5. Seed all roadside backfill and excavations as per Standard Specifications.
6. Wider platted rights-of-way allow narrower easements, proportionately. Additional easements may be required as necessary.
7. Maximum street centerline profile grade shall equal 10.0% or as approved by the City Engineer.
8. Subgrade underdrain systems are required in inherently "wet" areas, as specified by the City Engineer, see Standard Drawing for Subsurface Drainage.
9. Tree selection and planting shall comply with the City's Arboricultural Standards and Specification Guide.
10. This dimension shall be four feet (4') where standard franchise utility pedestals (no transformers) are to be located and shall be six feet (6') where pedestals and an AVISTA power transformer pad is required (see Standard Drawing for Franchise Utility Details).
11. On-street parking (9' width for Residential and 10' width for Collector/Industrial) is optional in this road standard. If included on one or both sides, then additional right-of-way shall be required (see Standard Drawing for Collector Parking Detail).
12. A center median is an option in this road standard. Minimum planter width shall be seven feet (7') with curbs on each side. Travel lanes adjacent to median shall be increased two feet (2') in width. Additional ROW shall be required to accommodate the median, curbs, and additional lane widths.
13. Collector streets in Commercial and Industrial zones shall be subject to access control.

REVISIONS	
DATE	DESCRIPTION

PROFESSIONAL ENGINEER REGISTERED 8832 5-19-14 STATE OF IDAHO KEVIN LILLY

DRAFTED BY: C.Edwards
CHECKED BY: K.Lilly
DRAWING SCALE: NTS
DATE: 3-31-2014

Collector

CITY OF MOSCOW
ENGINEERING DEPARTMENT

DRAWING NUMBER: 1c

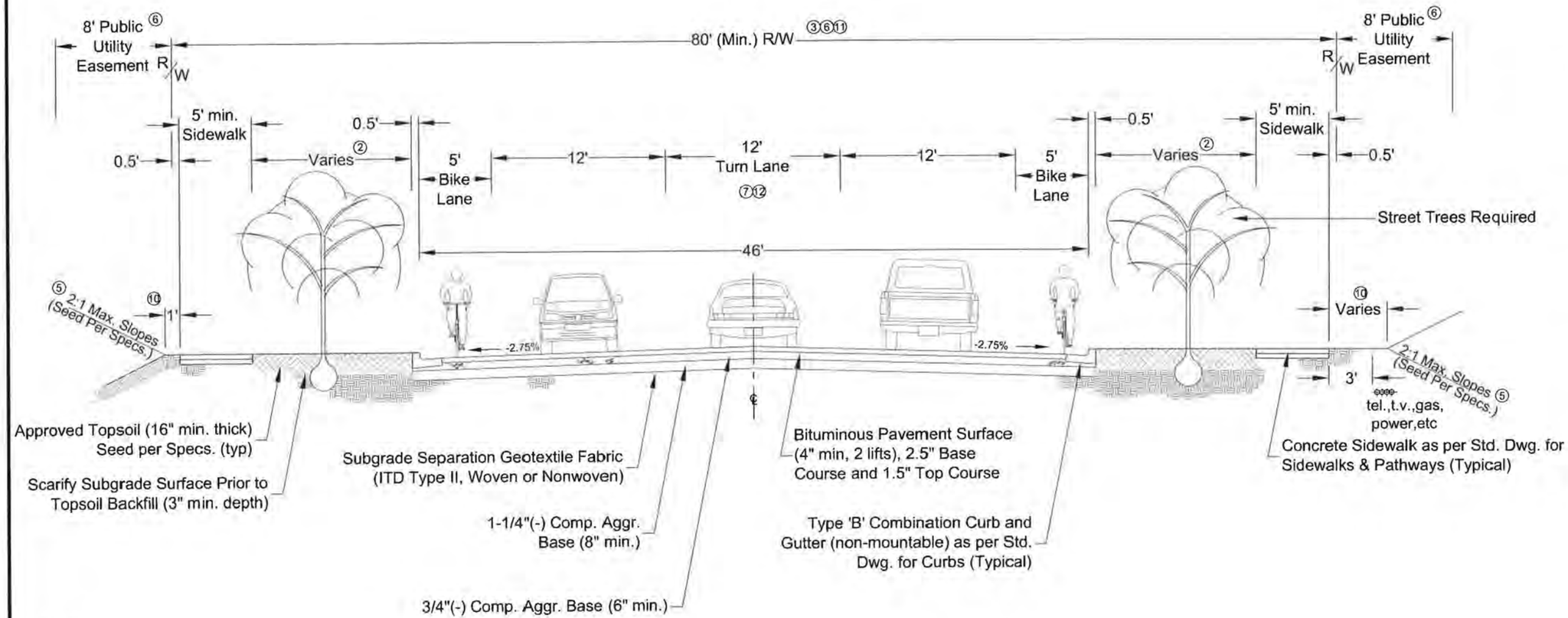

Notes:

1. This street section shall be used as a minimum standard for collector class streets in all zones or for other high volume Collector streets where on-street parking is not considered essential and future travel lanes are not anticipated.
2. The green strip may be narrowed to a minimum width of five feet (5') in areas of excessive cuts and fills, as approved by City Engineer.
3. Center streets in platted right-of-way, unless approved otherwise by the City Engineer. Additional right-of-way width shall be required as necessary to accommodate topography, utilities, turn lanes, roundabouts, signalized intersections, or other needs as determined by the City Engineer. Additional right-of-way required for transit stomps at Minor Arterial and Collector intersections or every thousand feet (1000').
4. Compact all subgrade and base aggregate to 95% of AASHTO T99 max. proctor density.
5. Seed all roadside backfill and excavations as per Standard Specifications.
6. Wider platted rights-of-way allow narrower easements, proportionately. Additional easements may be required as necessary.
7. Maximum street centerline profile grade shall equal 10.0% or as approved by the City Engineer.
8. Subgrade underdrain systems are required in inherently "wet" areas, as specified by the City Engineer, see Standard Drawing for Subsurface Drainage.
9. Tree selection and planting shall comply with the City's Arboricultural Standards and Specification Guide.
10. This dimension shall be four feet (4') where standard franchise utility pedestals (no transformers) are to be located and shall be six feet (6') where pedestals and an AVISTA power transformer pad is required (see Standard Drawing for Franchise Utility Details).
11. On-street parking (9' width for Residential and 10' width for Collector/Industrial) is optional in this road standard. If included on one or both sides, then additional right-of-way shall be required (see Standard Drawing for Collector Parking Detail).
12. A center median is an option in this road standard. Minimum planter width shall be seven feet (7') with curbs on each side. Travel lanes adjacent to median shall be increased two feet (2') in width. Additional right-of-way shall be required to accommodate the median, curbs, and additional lane widths.
13. Collector streets in Commercial and Industrial zones shall be subject to access control.

REVISIONS	
DATE	DESCRIPTION

PROFESSIONAL ENGINEER REGISTERED 8832 5-19-14 STATE OF IDAHO KEVIN LILLY

DRAFTED BY: C.Edwards
CHECKED BY: K.Lilly
DRAWING SCALE: NTS
DATE: 3-31-2014

Collector With Left Turn Lane

CITY OF MOSCOW
ENGINEERING DEPARTMENT

DRAWING NUMBER: 1d

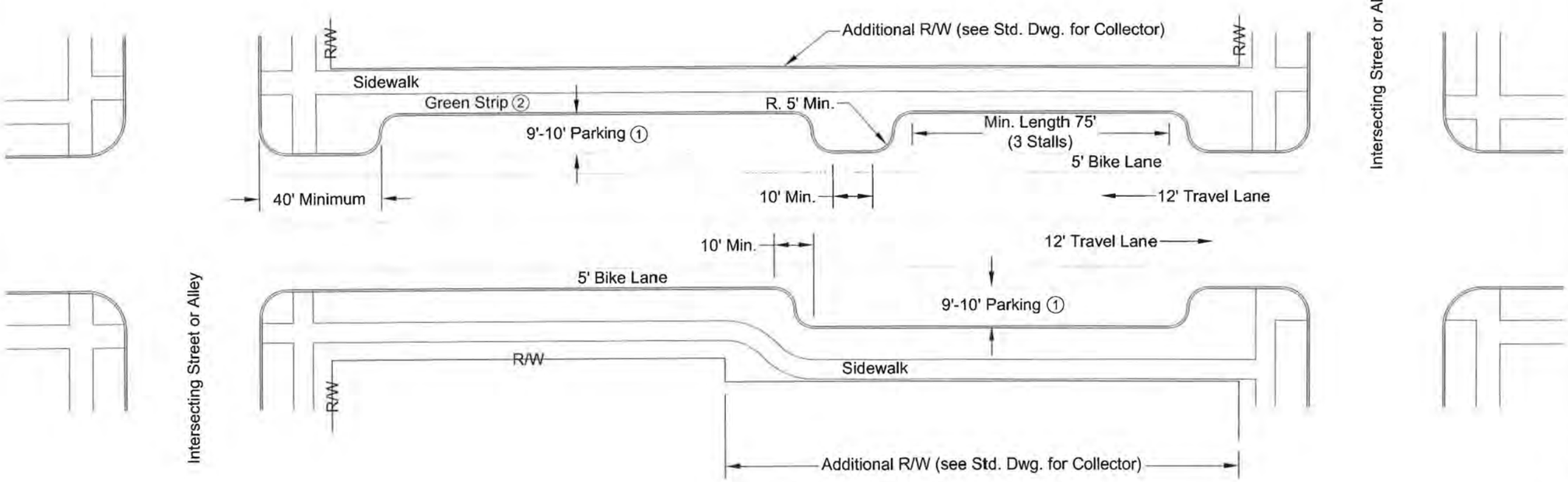

Notes:

1. Parking on Collector streets shall be a minimum of nine feet (9') wide in Residential zones and ten feet (10') wide in Commercial and Industrial zones.

2. The green strip may be narrowed to a minimum width of five feet (5') in areas of excessive cuts and fills, as approve by the City Engineer.

REVISIONS	
DATE	DESCRIPTION

PROFESSIONAL ENGINEER REGISTERED 8832 5-19-14 STATE OF IDAHO KEVIN LILLY

DRAFTED BY: C.Edwards

CHECKED BY: K.Lilly

DRAWING SCALE: NTS

DATE: 2-25-2014

Collector Parking Detail

CITY OF MOSCOW
ENGINEERING DEPARTMENT

DRAWING NUMBER:
1e

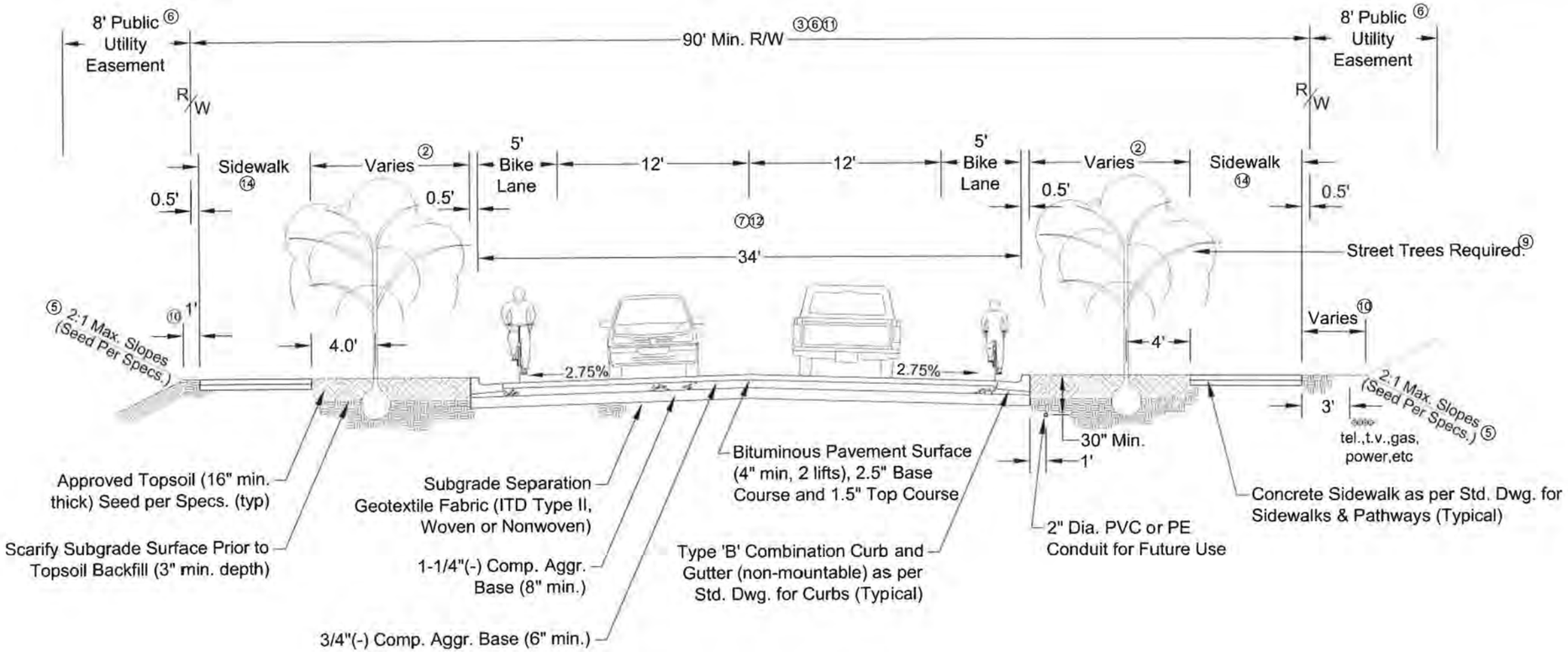

Notes:

1. This street section shall be used as a minimum standard for Minor Arterial class streets in all zones.
2. The green strip may be narrowed to a minimum width of eight feet (8') to accommodate bus pull-outs, additional lanes, and other needs, as approved by City Engineer.
3. Center streets in platted right-of-way, unless approved otherwise by the City Engineer. Additional right-of-way width shall be required as necessary to accommodate topography, utilities, turn lanes, parking, roundabouts, signalized intersections, or other needs as determined by the City Engineer. Additional right-of-way required for transit stops at Minor Arterial and Collector intersections or thousand feet (1000').
4. Compact all subgrade and base aggregate to 95% of AASHTO T99 max. proctor density.
5. Seed all roadside backfill and excavation as per Standard Specifications.
6. Wider platted rights-of-way allow narrower easements, proportionately. Additional easements may be required.
7. Maximum street centerline profile grade shall equal 10.0% or as approved by the City Engineer.
8. Subgrade underdrain systems are required in inherently "wet" areas, as specified by the City Engineer, see Standard Drawing for Subsurface Drainage.
9. Tree selection and planting shall comply with the City's Arboricultural Standards and Specification Guide.
10. This dimension shall be four feet (4') where standard franchise utility pedestals (no transformers) are to be located and shall be six feet (6') where pedestals and an AVISTA power transformer pad is required (see Standard Drawing for Franchise Utility Details).
11. On-street parking (9' width for Residential and 10' width for Commercial/Industrial) is optional in this road standard. If included on one or both sides, additional right-of-way shall be required.
12. A center median is an option in this road standard. Minimum planter width shall be ten feet (10') for Residential and eleven feet (11') for Commercial/Industrial with curbs on each side. Travel lanes adjacent to median shall be increased two feet (2') in width. Additional right-of-way shall be required to accommodate the median, curbs, and additional lane widths.
13. Minor Arterial streets shall be subject to access control. No residential driveways shall be permitted.
14. Minimum sidewalk widths shall be six feet (6') in Residential zones and eight feet (8') in Commercial and Industrial zones. Back of sidewalk to be at the right-of-way line.

REVISIONS	
DATE	DESCRIPTION

PROFESSIONAL ENGINEER REGISTERED 8832 5-19-14 STATE OF IDAHO KEVIN LILLY

DRAFTED BY: C.Edwards
CHECKED BY: K.Lilly
DRAWING SCALE: NTS
DATE: 3-31-2014

Minor Arterial

CITY OF MOSCOW
ENGINEERING DEPARTMENT

DRAWING NUMBER: 1f

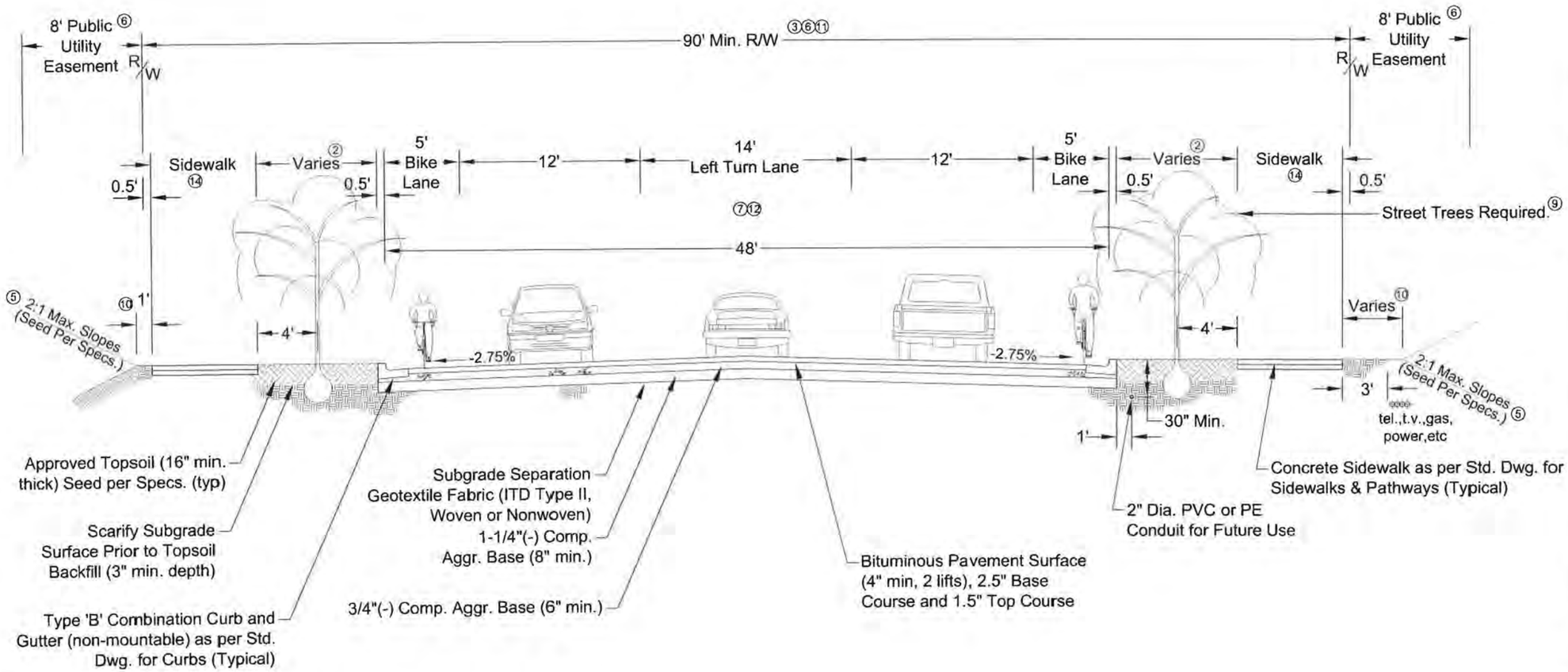

Notes:

1. This street section shall be used as a minimum standard for Minor Arterial class streets in all zones.
2. The green strip may be narrowed to a minimum width of eight feet (8') to accommodate bus pull-outs, additional lanes, and other needs, as approved by City Engineer.
3. Center streets in platted right-of-way, unless approved otherwise by the City Engineer. Additional right-of-way width shall be required as necessary to accommodate topography, utilities, turn lanes, roundabouts, signalized intersections, or other needs as determined by the City Engineer. Additional right-of-way required for transit stops at Minor Arterial and Collector intersections or every thousand feet (1000').
4. Compact all subgrade and base aggregate to 95% of AASHTO T99 max. proctor density.
5. Seed all roadside backfill and excavation as per Standard Specifications.
6. Wider platted rights-of-way allow narrower easements, proportionately. Additional easements may be required.
7. Maximum street centerline profile grade shall equal 10.0% or as approved by the City Engineer.
8. Subgrade underdrain systems are required in inherently "wet" areas, as specified by the City Engineer, see Standard Drawing for Subsurface Drainage.
9. Tree selection and planting shall comply with the City's Arboricultural Standards and Specification Guide.
10. This dimension shall be four feet (4') where standard franchise utility pedestals (no transformers) are to be located and shall be six feet (6') where pedestals and an AVISTA power transformer pad is required (see Standard Drawing for Franchise Utility Details).
11. On-street parking (9' width for Residential and 10' width for Collect/industrial) is optional in this road standard. If included on one or both sides, additional right-of-way shall be required.
12. A center curbed median is an option in this road standard. Minimum median planter width shall be ten feet (10') for Residential and eleven feet (11') for Commercial/Industrial with curbs on each side. Travel lanes adjacent to median shall be increased two feet (2') in width. Additional right-of-way shall be required to accommodate the median, curbs, and additional lane widths.
13. Minor Arterial streets shall be subject to access control. No residential driveways shall be permitted.
14. Minimum sidewalk widths shall be six feet (6') in Residential zones and eight feet (8') in Commercial and Industrial zones. Back of sidewalk to be at the right-of-way line.

REVISIONS	
DATE	DESCRIPTION

PROFESSIONAL ENGINEER REGISTERED 8832 5-19-14 STATE OF IDAHO KEVIN LILLY

DRAFTED BY: C.Edwards
CHECKED BY: K.Lilly
DRAWING SCALE: NTS
DATE: 3-31-2014

Minor Arterial With Left Turn Lane

CITY OF MOSCOW
ENGINEERING DEPARTMENT

DRAWING NUMBER: 1g

NOTES:

1. No parking allowed on either side of street.
2. Use of this street standard shall be limited to areas with low potential for "pass through" traffic and shall not conflict with or hinder the public street system configuration and logical extensions.

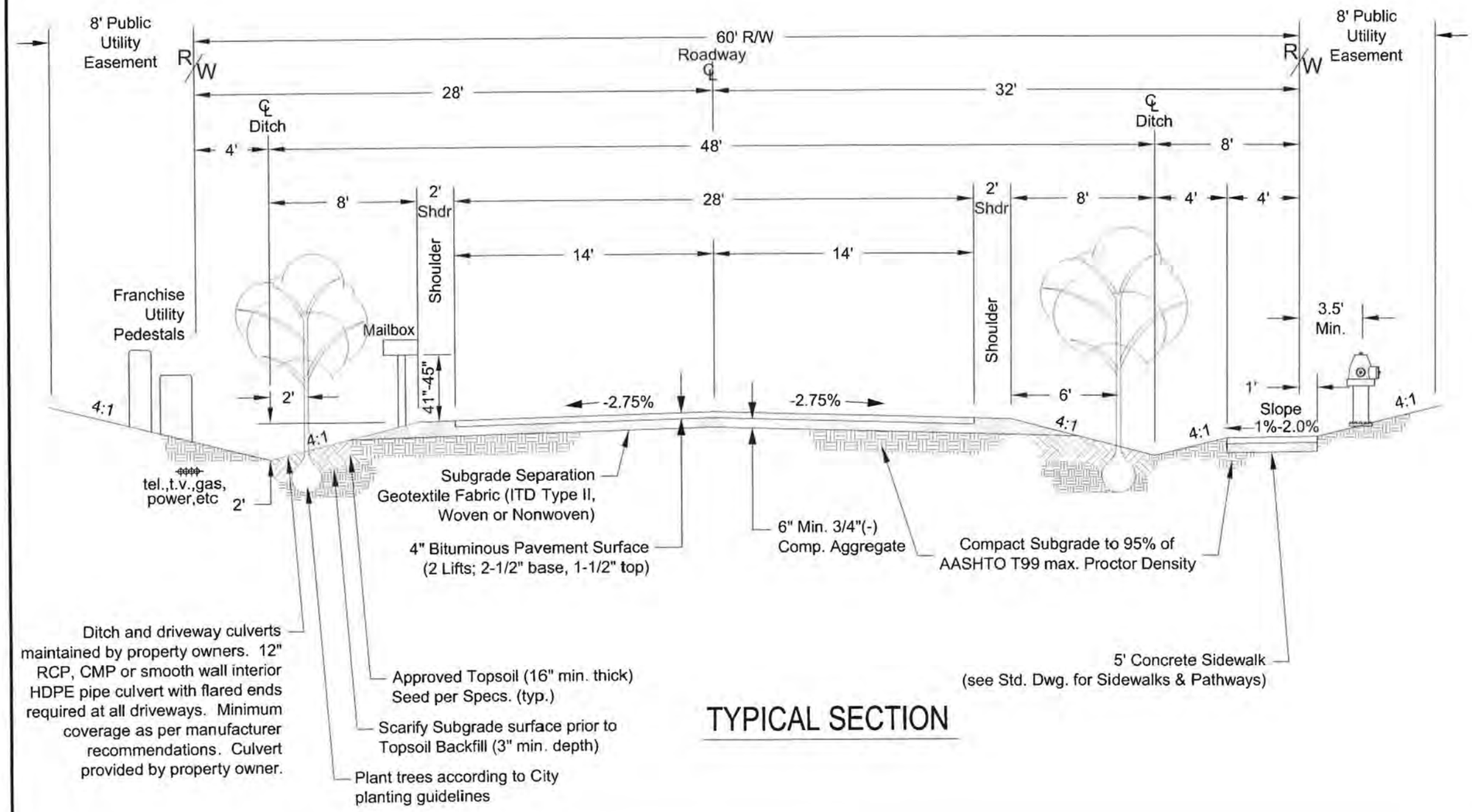

TYPICAL SECTION

REVISIONS	
DATE	DESCRIPTION

SIGNED AND DATED

PROFESSIONAL ENGINEER REGISTERED 8832 5-19-14 STATE OF IDAHO KEVIN LILLY

DRAFTED BY: K.Kipp / C.Edwards

CHECKED BY: K.Lilly

DRAWING SCALE: NTS

DATE: 2-26-2014

LARGE LOT SUBDIVISION STREET STANDARD

CITY OF MOSCOW
ENGINEERING DEPARTMENT

DRAWING NUMBER: 1h

NOTES:

1. No parking allowed on either side of alley.
2. "No Parking in Alley" signage to be installed by developer in accordance with MUTCD and City Specifications if required by City Engineer.
3. Drainage system required as approved by the City Engineer.
4. Geotechnical Engineering assessment of soil conditions may be required by City Engineer to determine if additional asphalt pavement and aggregate base depth will be required.
5. Truncated domes are required at sidewalk crossings of public alleys.

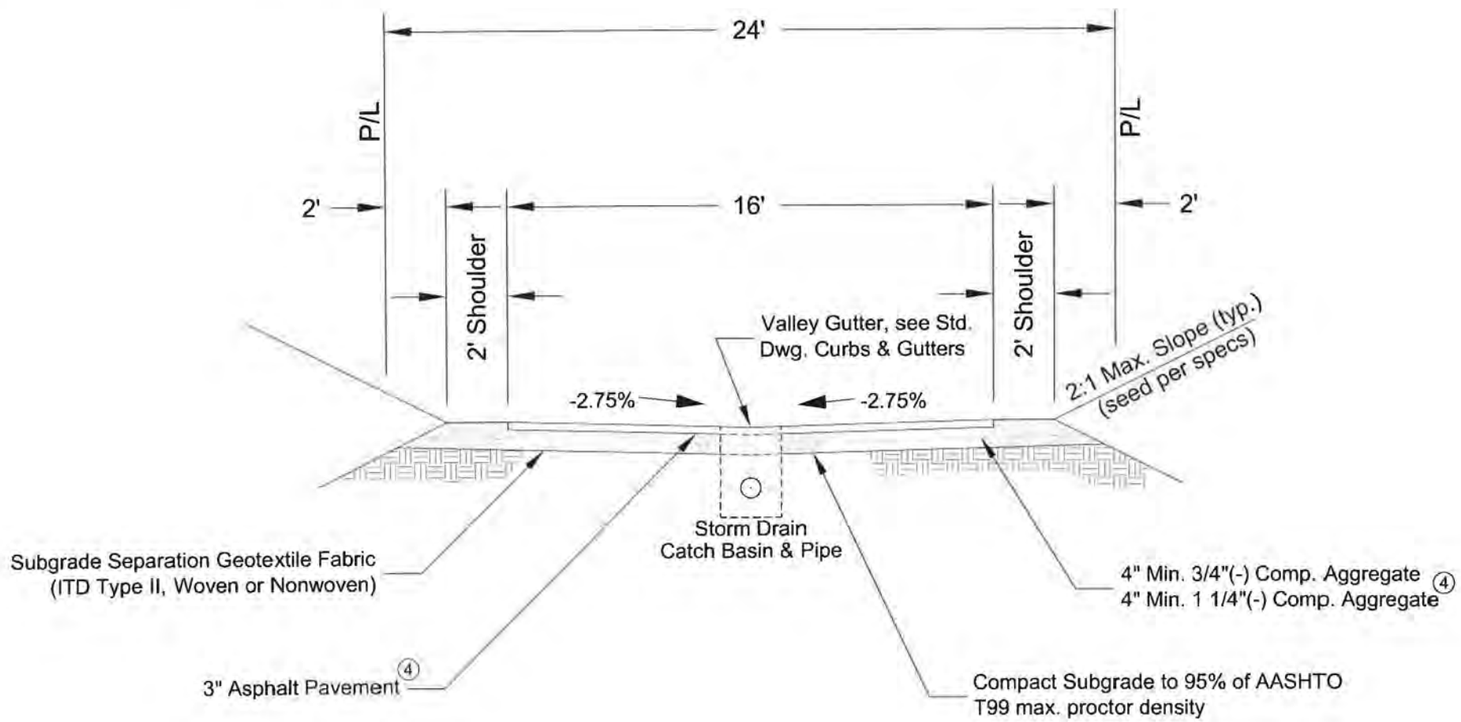

TYPICAL SECTION

REVISIONS	
DATE	DESCRIPTION

SIGNED AND DATED

PROFESSIONAL ENGINEER REGISTERED 8832 5-5-14 STATE OF IDAHO KEVIN LILLY

DRAFTED BY: C.Edwards

CHECKED BY: K.Lilly

DRAWING SCALE: NTS

DATE: 3-5-2014

PUBLIC ALLEY

CITY OF MOSCOW
ENGINEERING DEPARTMENT

DRAWING NUMBER: 2

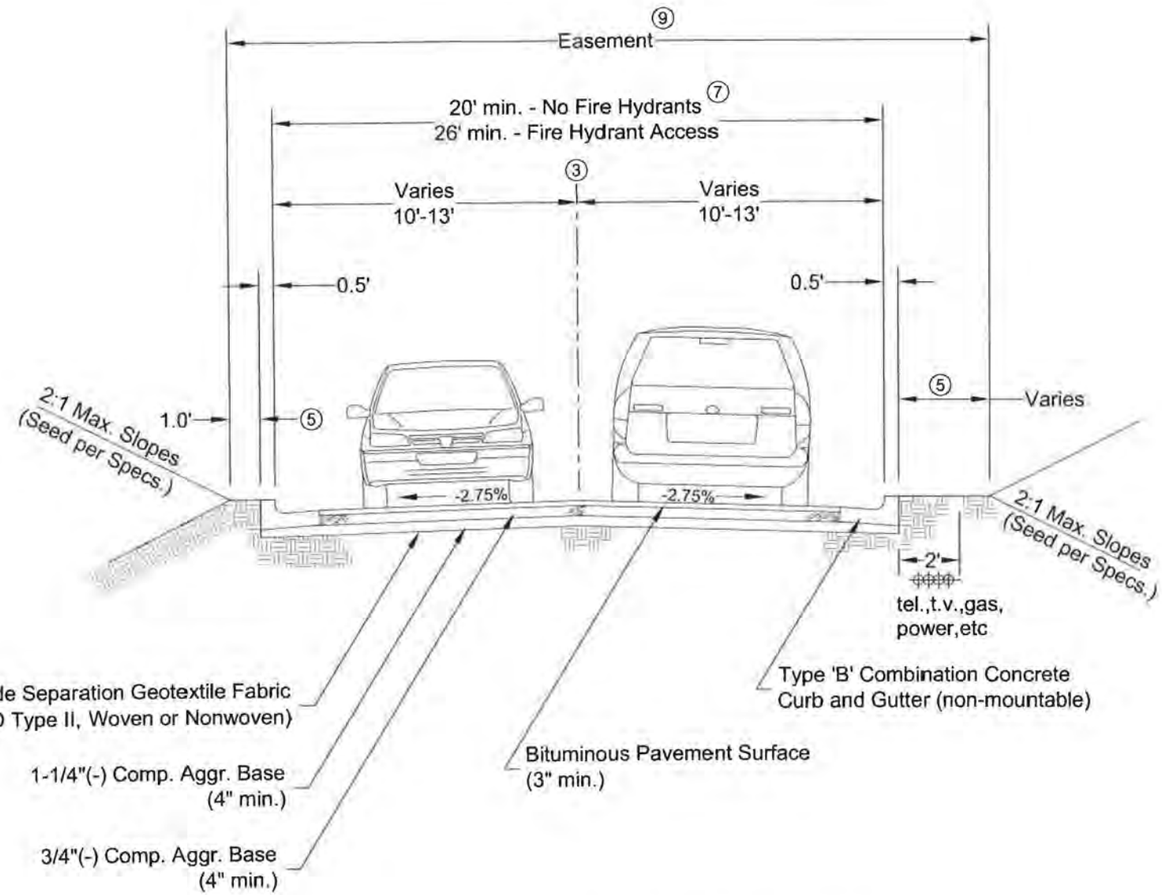

NOTES:

1. Compact all subgrade and aggregate base to 95% of AASHTO T99 max. proctor density.
2. Seed all roadside backfill and excavations as per specifications.
3. Maximum centerline profile grade equals 10.0% or as approved by the City Engineer. Additional easements may be required as necessary.
4. Subgrade underdrain systems are required in inherently "wet" areas, as specified by the Engineer.
5. This dimension shall be four feet (4') where standard franchise utility pedestals (no transformers) are to be located and shall be six feet (6') where pedestals and an AVISTA power transformer pad is required (see Standard Drawing for Franchise Utility Details).
6. Sidewalks, vehicular cubs cuts/approaches, and pedestrian drops shall comply with City Standards where required and installed.
7. Designated fire lanes shall be signed for no parking and curbs (if present) shall be painted yellow. Additional width my be required for Fire Department access.
8. Gates shall not be permitted.
9. Public utility and franchise utility easements shall be provided per City Standards for utilities within the roadway area.
10. Private streets shall be limited in use to Planned Unit Developments (PUD) and shall not conflict with or hinder the public street system configuration and logical extensions. Private streets shall not promote "pass through" traffic between public streets.
11. Sidewalks or other pedestrian pathways shall be installed if required by the PUD process and shall be a minimum of five feet (5') in width.
12. City shall not provide any maintenance, repair, or snow removal on private streets.
13. A street light shall be installed at each intersection of a private street with a public street per the Residential Street Lighting Standard Drawing.
14. Vertical and horizontal alignment of private streets shall meet the requirements for Fire Department access as per the International Fire Code.

REVISIONS	
DATE	DESCRIPTION

PROFESSIONAL ENGINEER REGISTERED 8832 STATE OF IDAHO KEVIN LILLY

DRAFTED BY: C.Edwards
CHECKED BY: K.Lilly
DRAWING SCALE: NTS
DATE: 2-26-2014

PRIVATE STREETS

CITY OF MOSCOW
ENGINEERING DEPARTMENT

DRAWING NUMBER: 3

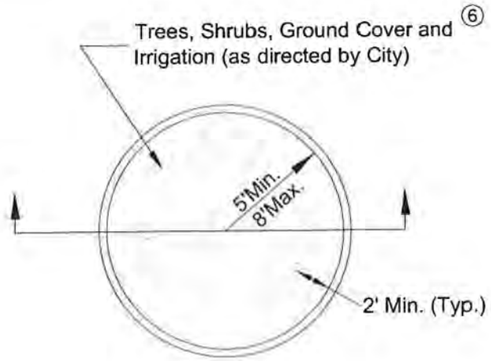

PLAN

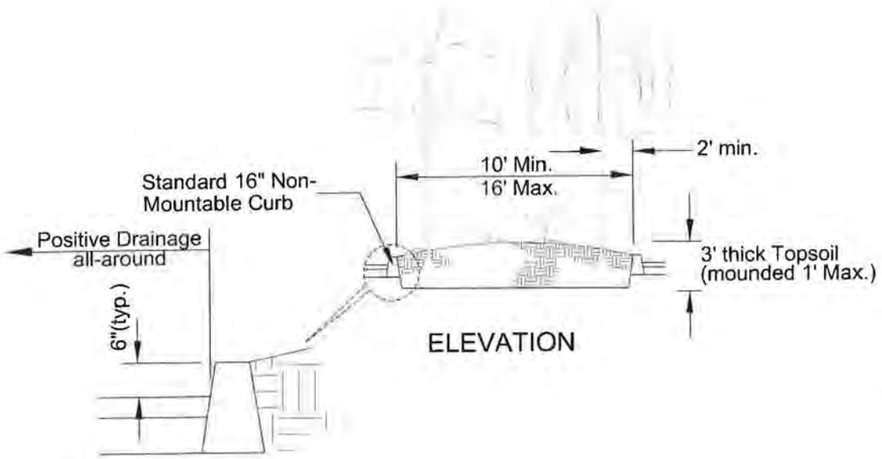

ELEVATION

OPTIONAL PLANTER ISLAND

DETAIL "A"

Not to Scale

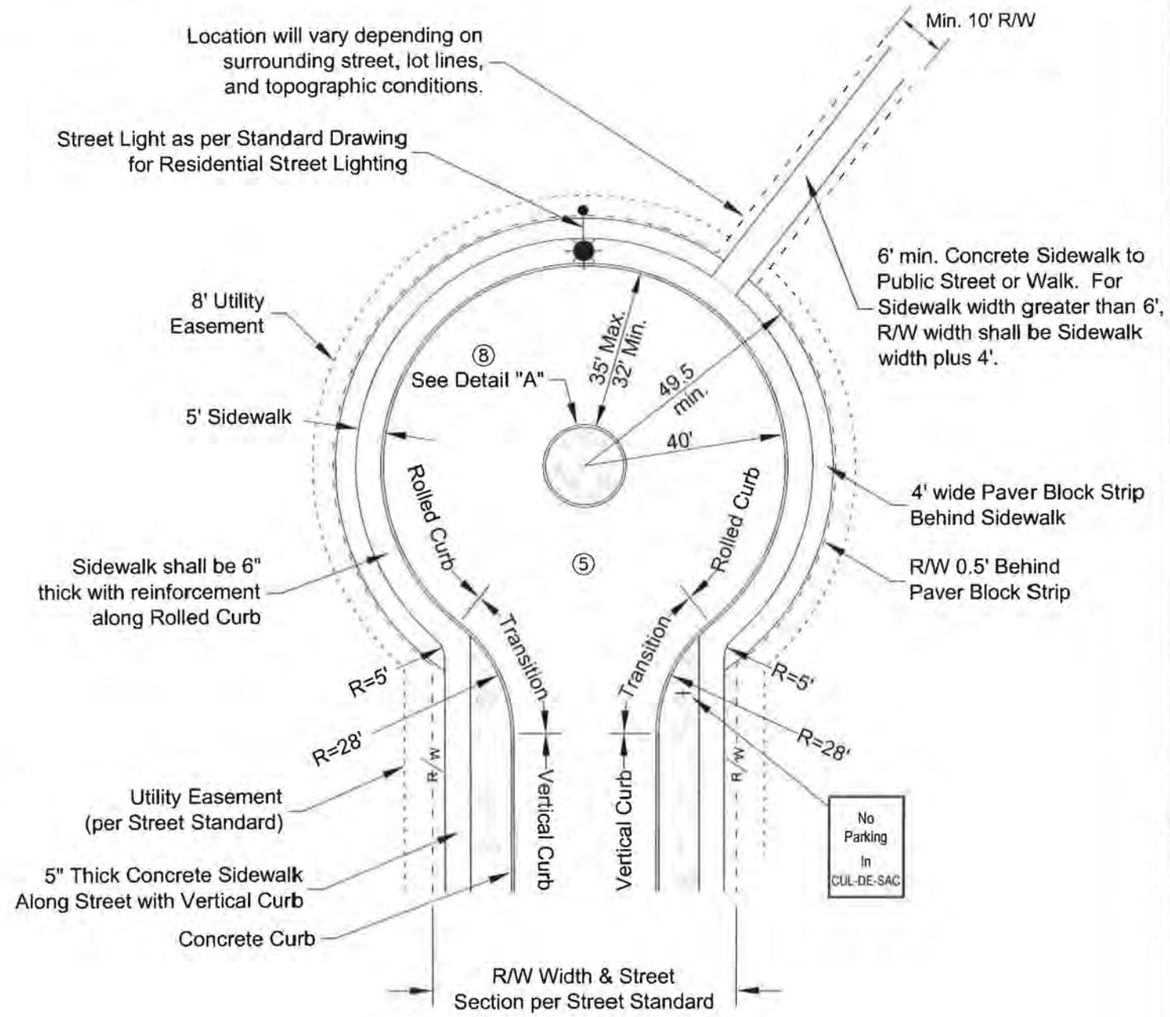

CUL-DE-SAC

NOTES:

1. Use of cul-de-sac and 'dead end' streets shall be limited to promote street connectivity and emergency vehicle access. Cul-de-sacs shall only be allowed when topographic conditions or other factors prohibit reasonable extension of the street.
2. Center cul-de-sacs and turnarounds in platted right-of-way unless otherwise approved by the City Engineer.
3. All signs to be furnished and installed by 'Developer'. Signs and installation to be in accordance with MUTCD and City Specifications.
4. Tree selection an planting shall comply wit the City's Arboricultural Standards and Specification Guide.
5. All cul-de-sacs to be constructed with a minimum of 1.0% sloping surface to drain.
6. All curb radii dimensions are measured as per the Standard Drawing for Curbs.
7. Seed all cut/fill slopes and green strips per city specifications.
8. Installation of optional Planter Island as per approval by the City Engineer.
9. 'Not A Through Street' sign required at the entrance of cul-de-sac streets.
10. No utility poles, lights standards, mailboxes, fire hydrants, or other vertical features allowed in sidewalk or paver block strip within cul-de-sac.
11. Geotechnical Engineering assessment of soil conditions may be required by City Engineer to determine if additional asphalt pavement and aggregate base depth will be required.

REVISIONS	
DATE	DESCRIPTION

PROFESSIONAL ENGINEER REGISTERED 8832 5-12-14 STATE OF IDAHO KEVIN LILLY

DRAFTED BY: K.Kipp / C.Edwards

CHECKED BY: K.Lilly

DRAWING SCALE: NTS

DATE: 2-26-2014

CUL-DE-SAC DETAILS

CITY OF MOSCOW ENGINEERING DEPARTMENT

DRAWING NUMBER: 4

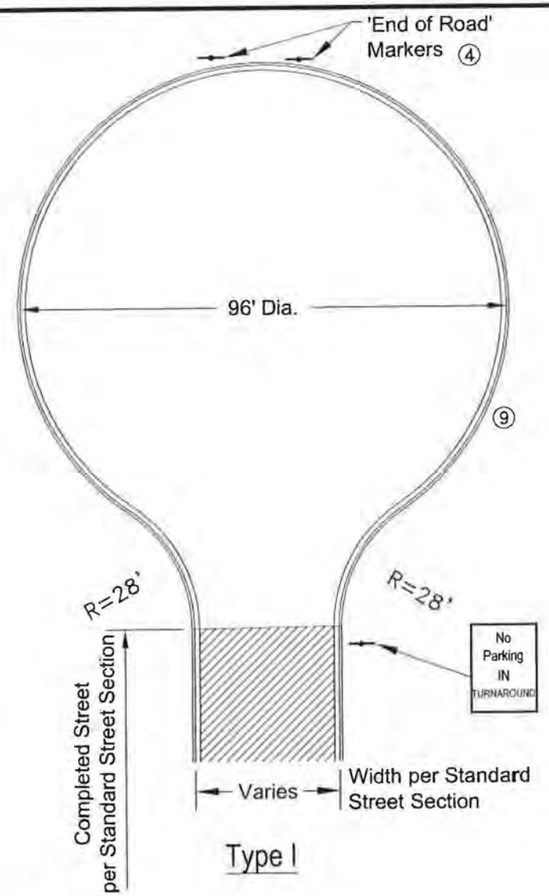

Type I

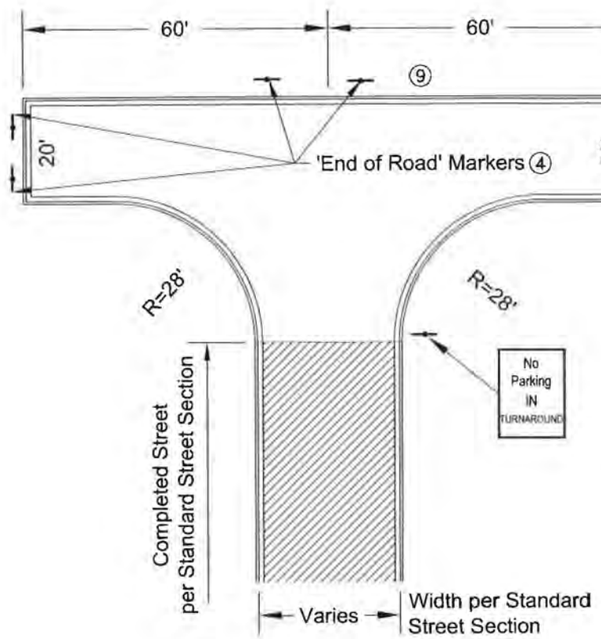

Type II

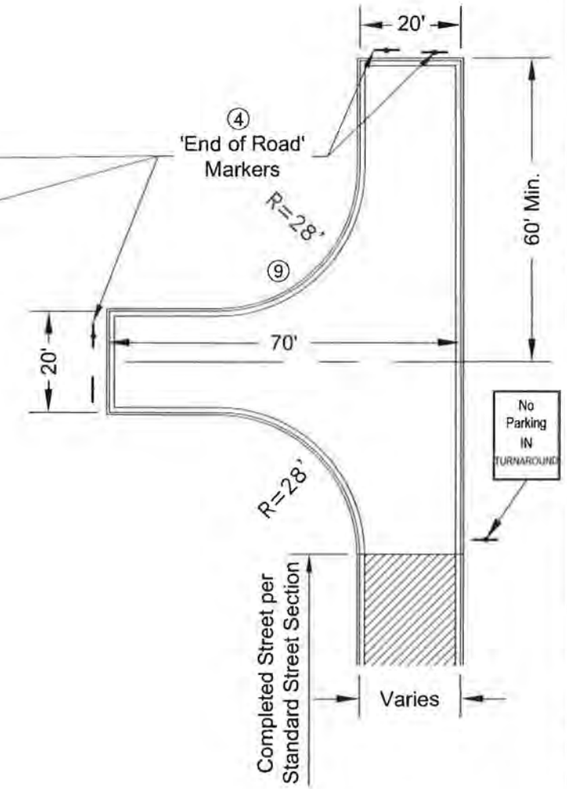

Type III

NOTES:

1. Other configurations may be approved by the City Engineer and Fire Marshal; basic dimensional criterion shown herein must be satisfied.
2. Temporary easements must be granted for those portions of temporary turnarounds outside of platted public utility easements and rights-of-way.
3. Temporary turnarounds may be designed to include driveways; public easement required.
4. 'End of Roadway' markers per Standard Drawing for End of Road Marker & Dead End Signs must be placed as shown.
5. All signs to be furnished and installed by 'Developer.' Signs and installation to be in accordance with MUTCD and City Specifications.
6. One street light required. Locate as per Standard Drawing for Residential Street Lighting.
7. Temporary turnarounds with steep embankments exceeding three feet (3') in height must have guardrail or barrier protection; as required and/or approved by the City Engineer.
8. Temporary turnarounds shall be designed to provide a minimum drainage slope of 1% to an approved public storm drainage system; including catch basins and piping, as required.
9. Curb, Type 'B' required all-around or as approved by the City Engineer.

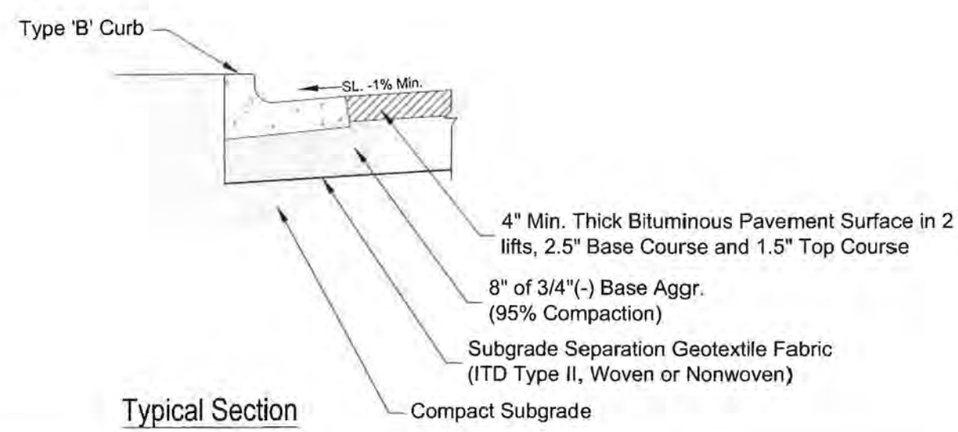

Typical Section

REVISIONS	
DATE	DESCRIPTION

PROFESSIONAL ENGINEER REGISTERED 8832 5-19-14 STATE OF IDAHO KEVIN LILLY

DRAFTED BY: C.Edwards
CHECKED BY: K.Lilly
DRAWING SCALE: NTS
DATE: 3-5-2014

TEMPORARY TURNAROUND

CITY OF MOSCOW
ENGINEERING DEPARTMENT

DRAWING NUMBER: 5

NOTES:

1. Replacement curb and sidewalk may be cast monolithic with prior approval of City Engineer.
2. Sidewalk to back-of-curb slope may not exceed 12:1 without City Engineer's approval.
3. Light broom finish curb parallel with the long axis of curb.
4. Rolled curb prohibited where sidewalk is adjacent to curb, unless specially allowed by the City Engineer. In areas without planter strips, sidewalks adjacent to to rolled curb shall be a minimum of six inches (6") thick.
5. All curb roadway planimetric radii dimensions shall be measured to the "Radii Dimension Line"shown in the typical curb section.
6. See table for curb radii requirements. Thirty foot (30') curb radii are required where any City street intersects an Idaho Transportation Department roadway.
7. 'Shed' section streets require 'spill curb' on the uphill side with gutter matching street cross slope.
8. Type 'A' curb only allowed where extending or replacing existing Type 'A' Curb.
9. Type 'C' curb only allowed in cul-de-sacs and where replacing existing rolled curb.
10. Construction joints every 8-feet, or match adjacent sidewalk

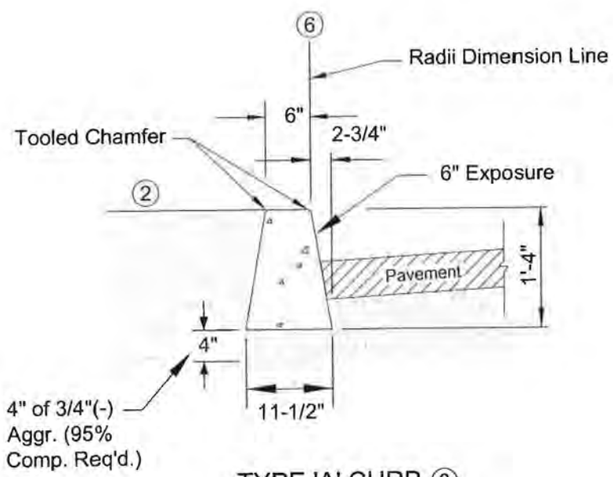

TYPE 'A' CURB 8

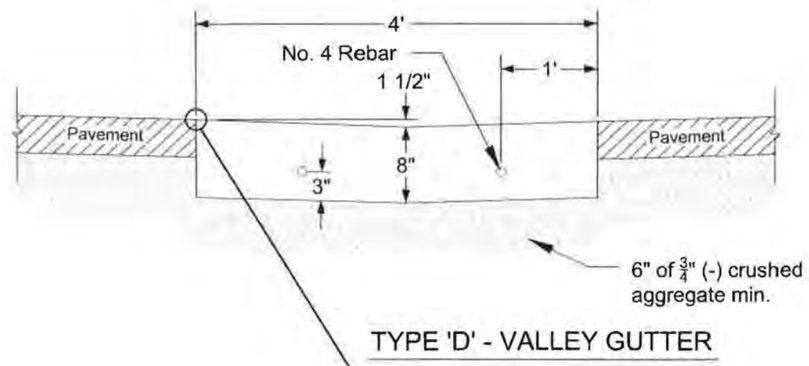

TYPE 'D' - VALLEY GUTTER

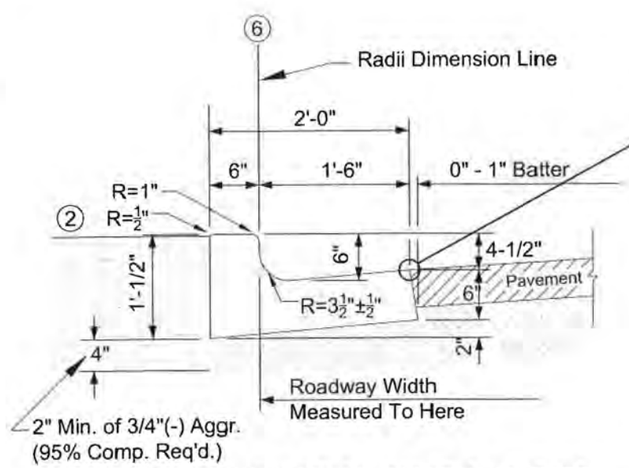

TYPE 'B' - COMBINATION CURB & GUTTER

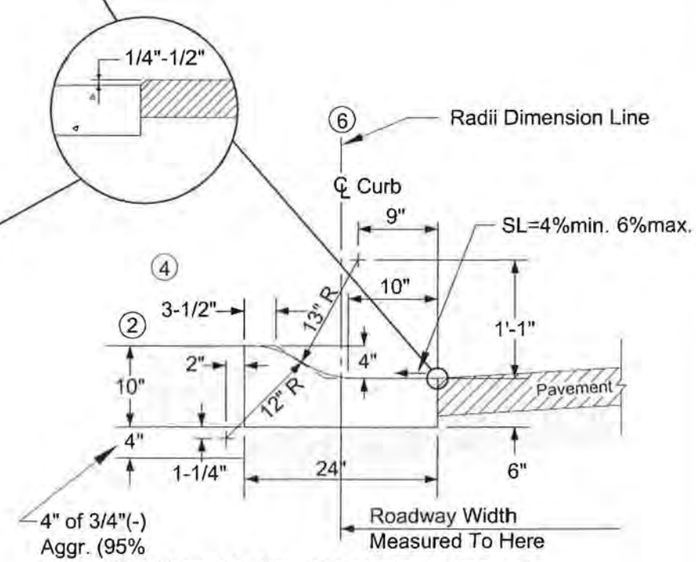

TYPE 'C' - ROLLED CURB 9

CURB RADII REQUIREMENTS

Intersecting Street Classification	Curb Radii Dimension
Local - Local	15'
Local - Collector	15'
Local - Arterial	25'
Collector - Collector	25'
Collector - Arterial	25'
Arterial - Arterial	30'

REVISIONS

DATE	DESCRIPTION

SIGNED AND DATED

PROFESSIONAL ENGINEER REGISTERED 8832 5-19-14 STATE OF IDAHO KEVIN LILLY

DRAFTED BY: C.Edwards / K.Kipp
CHECKED BY: K.Lilly
DRAWING SCALE: NTS
DATE: 3-5-2014

CURBS & GUTTERS

CITY OF MOSCOW
ENGINEERING DEPARTMENT

DRAWING NUMBER: 6

NOTES:

1. Minimum sidewalk widths shall be five feet (5') for local streets. For sidewalk widths for collectors and arterials, see Standard Street Section Drawings. Pathway width shall be ten feet (10') unless otherwise approved by the City Engineer.
2. Maximum cross slope of 2.0%; minimum cross slope of 1% - pathway cross slope may be 'crown' or 'shed'. Maximum sustained longitudinal grade for pathways of 5%. Pathways shall be free of humps, dips, or unnecessary curves.
3. Curb and sidewalk may be cast monolithic for repairs only with prior approval of City Engineer.
4. Slope from sidewalk to back-of-curb may not exceed 12:1 without City Engineer's approval.
5. Green strip required between curb and sidewalk width as specified in Standard Street Section Drawings. In areas of excessive cuts and fills, width may be reduced, as approved by the City Engineer.
6. Sidewalks shall be five inches (5") thick as shown on this drawing - with the following exceptions:
   a. Sidewalks through driveways shall be six inches (6") thick and constructed per the Std. Dwg. for Driveway Approaches.
   b. Sidewalks constructed adjacent to rolled curb shall be six inches (6") thick and reinforced as shown on this drawing.
   c. Reinforcement as directed by City Engineer.
7. Coarse broom finish sidewalk concrete perpendicular to the long axis of sidewalk; light broom finish curb concrete parallel to the long axis of curb.
8. This dimension shall be four feet (4') where standard franchise utility pedestals (excluding transformers) are to be located and shall be six feet (6') where pedestals and an AVISTA power transformer pad is required (see Standard Drawing for Franchise Utility Details).
9. Any trees adjacent to or with branches overhanging the pathway shall be kept trimmed such that ten feet (10') of both vertical and horizontal clearance exists between any branches and the pathway. Landscape vegetation cannot overhang sidewalk.
10. If fall protection is required by code, railing should be installed with a minimum height of 42" and a minimum height of 54" for bridges. Railing style must be approved by City Engineer.
11. 'Select' native backfill shall be free of clods, roots, gravel, and other inert material and shall be neatly graded to blend with the path and the adjoining ground. Backfill shall be compacted to 90% within 2' of path edge.
12. Furnish and install drainage culverts as required and as directed by the City Engineer.

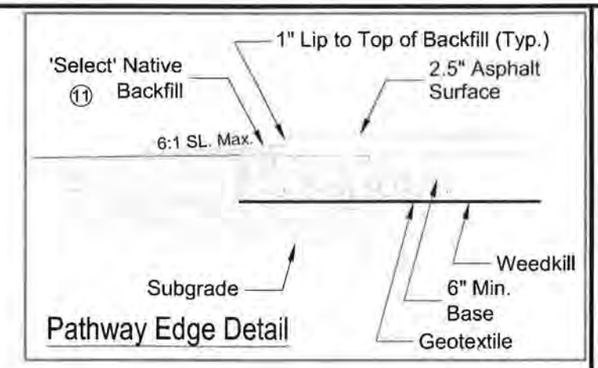

Pathway Edge Detail

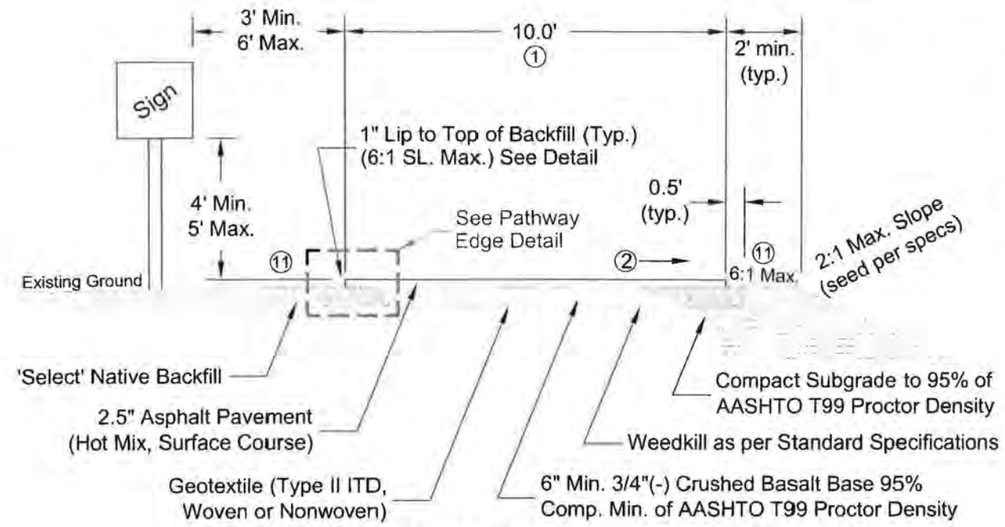

PATHWAY
TYPICAL SECTION

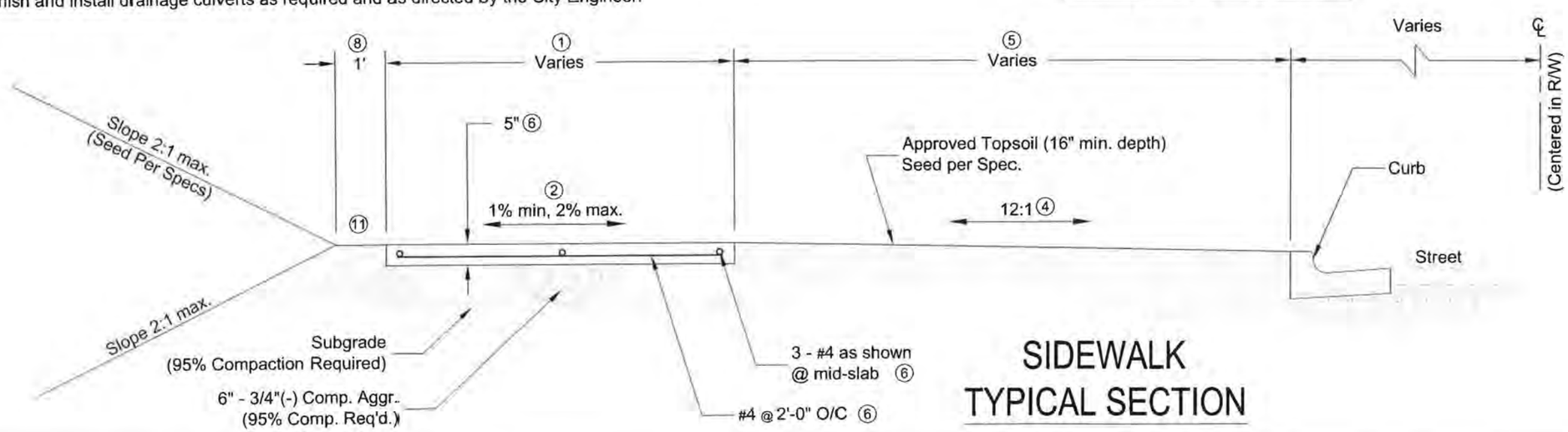

SIDEWALK
TYPICAL SECTION

REVISIONS	
DATE	DESCRIPTION

SIGNED AND DATED

PROFESSIONAL ENGINEER REGISTERED 8832 5-19-14 STATE OF IDAHO KEVIN LILLY

DRAFTED BY: C.Edwards
CHECKED BY: K.Lilly
DRAWING SCALE: NTS
DATE: 3-5-2014

SIDEWALKS & PATHWAYS

CITY OF MOSCOW
ENGINEERING DEPARTMENT

DRAWING NUMBER: 7

NOTES:

1. Moscow Standard Construction Specifications apply. Pedestrian ramps must comply with current Americans with Disability Act (ADA) Accessibility Guidelines.
2. All ramps shall be textured with Detectable Warnings, "Truncated Domes" as required by the current ADA Guidelines and as allowed by the City Engineer. The truncated domes shall extend the the full width of the flush curb ramp and two feet (2') radial to back of curb. Truncated Domes shall be prefabricated plate units cast monolithic with the concrete and set flush and to manufactured specifications. Coarse broom finish the remainder of the ramp.
3. All curb roadway planimetric radii dimensions shall be measured to the 'Radii Dimension Line' shown in the typical curb sections. See Standard Drawing for Curbs & Sidewalks. Curb radii shall conform to "Curb Radii Requirements" table in Standard Drawing for Curbs & Gutters.
4. Light broom finish curbs and gutters parallel with the long axis of the curb and/or curb and gutter. Coarse broom finish sidewalks perpendicular to the long axis of sidewalk.
5. Rolled curb section properties may vary from those shown as specifically allowed by the City Engineer.
6. Sidewalk constructed in driveway locations shall be six inches (6") thick and reinforced, all as per Standard Drawing for Driveway Approaches.
7. Specified 2.0% cross-slopes shall be 1% minimum and 2.0% maximum.
8. Construct curb or sloped (4:1) backfill - as required and/or allowed by the City Engineer.
9. Type I or Type II pedestrian ramp is the required standard; Type III, IV, or V ramps may be allowed in special circumstances as approved by the City Engineer.
10. Curb and sidewalk may be cast monolithic with prior approval of City Engineer.

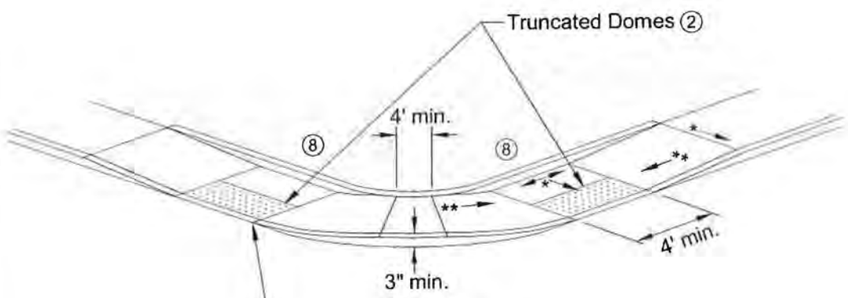

Type I
(Typical - Both Ramps)

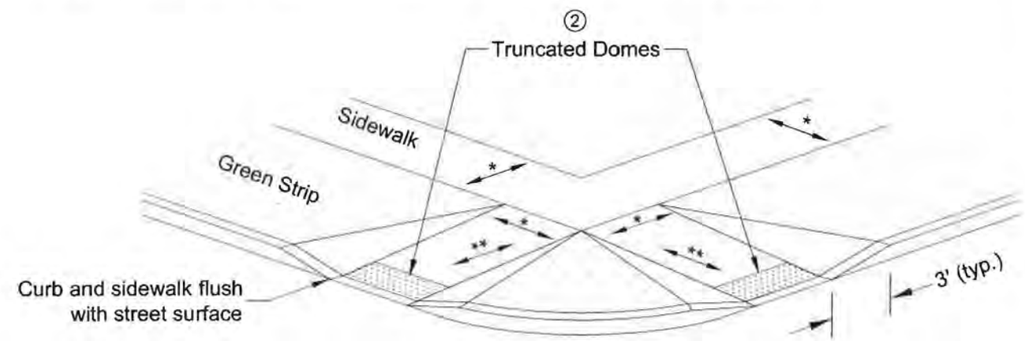

Type II

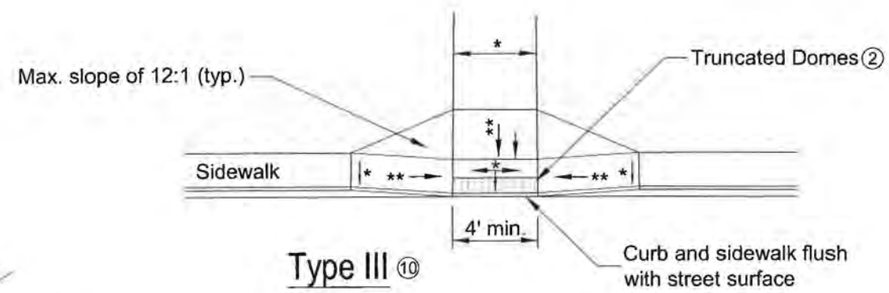

Type III ⑩

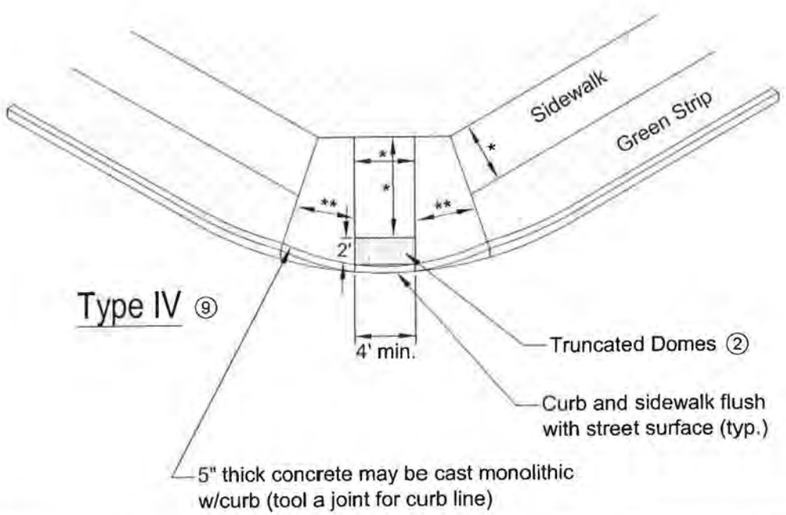

Type IV ⑨

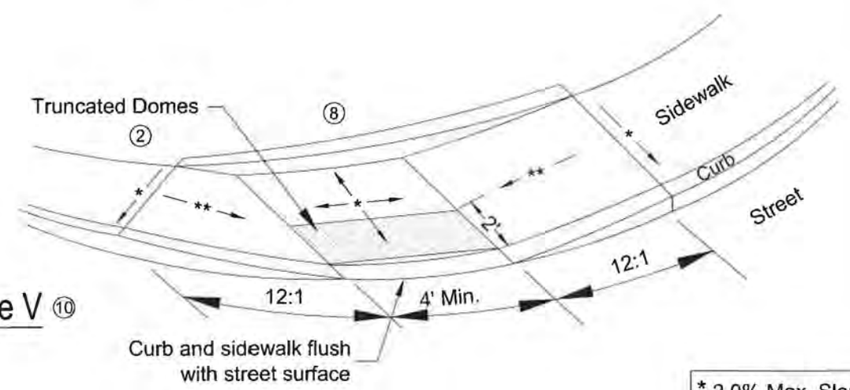

Type V ⑩

* 2.0% Max. Slope ⑧
** 12:1 Max. Slope

REVISIONS	
DATE	DESCRIPTION

SIGNED AND DATED

PROFESSIONAL ENGINEER REGISTERED 8832 5-19-14 STATE OF IDAHO KEVIN LILLY

DRAFTED BY: K.Kipp / B.Buvel C.Edwards

CHECKED BY: K.Lilly

DRAWING SCALE: NTS

DATE: 3-5-2014

PEDESTRIAN RAMPS

CITY OF MOSCOW
ENGINEERING DEPARTMENT

DRAWING NUMBER: 8

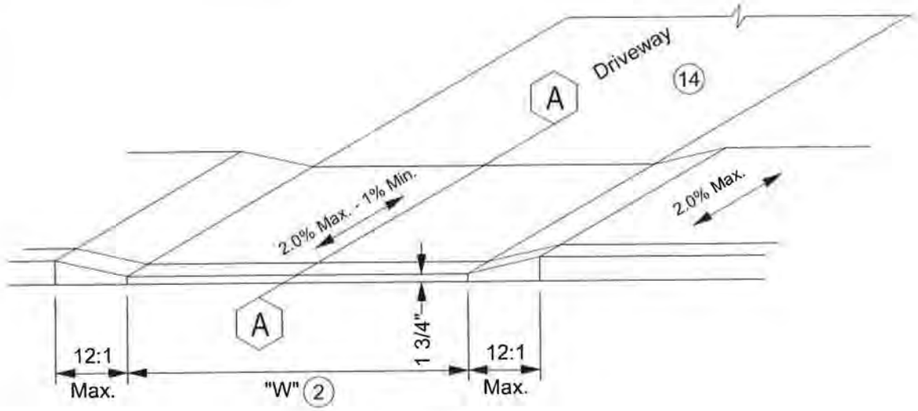

TYPE I

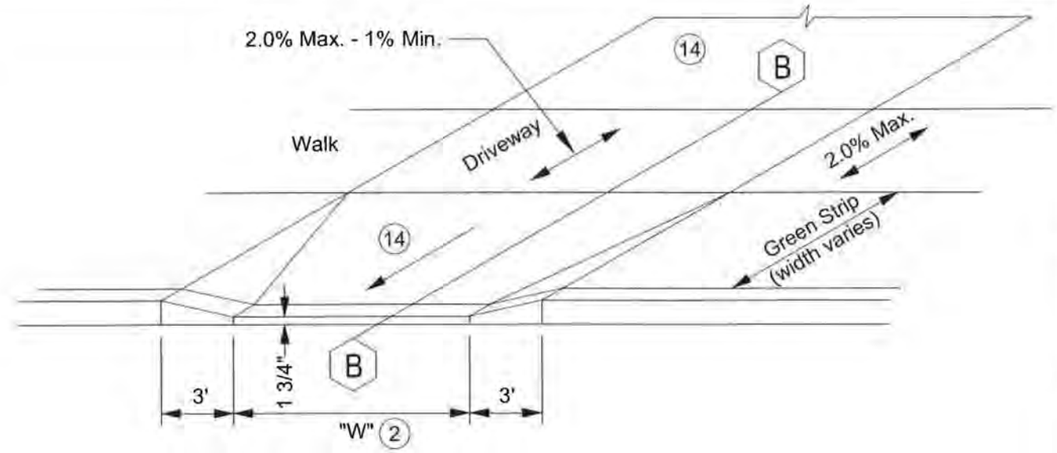

TYPE II

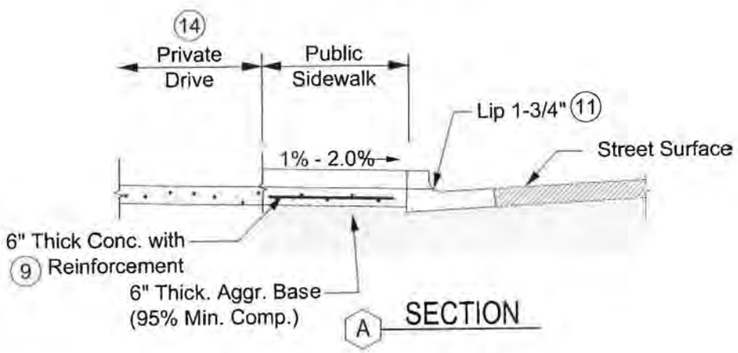

A SECTION

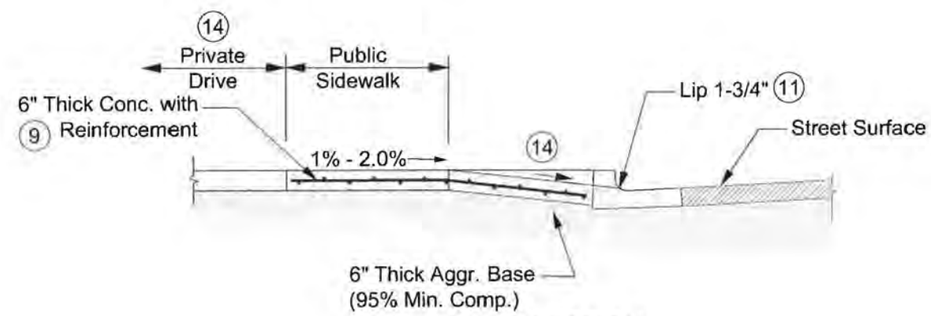

B SECTION

NOTES:

1. Existing curb and sidewalk section to be removed (sawcuts required) prior to construction of vehicular approaches.
2. The width "W" of a vehicle approach providing access to residential uses shall be a maximum of twenty feet (20'). Vehicle approaches providing two-way access to commercial uses shall be a maximum of thirty feet (30') wide unless a wider width is deemed appropriate by the City Engineer.
3. Vehicle approaches shall be located at least thirty feet (30') from the intersection of the curb line of an intersecting street.
4. Approaches shall be limited to one per street frontage for each lot, with the following exceptions:
   a. Two twenty foot (20') curb cuts may be permitted to commercial uses where one cut will be egress only and the other ingress only.
   b. Additional approaches may be authorized by the City Engineer where, in his/her opinion, an exceptionally long street frontage or traffic conditions in the area justify such approaches.
5. Truncated domes are not to be installed in sidewalk at driveways.
6. A City of Moscow excavation permit is required to construct new driveways through existing curbs and sidewalks.
7. Curb and sidewalk may be cast monolithic with prior approval of City Engineer. (Strike dummy joint at back of curb)
8. Driveways within State of Idaho right-of-way are subject to Idaho Transportation Department standards and permits. Inquire at Moscow Engineering Department (208-883-7034).
9. Reinforcement shall be 6 x 6 - W2.1 / 2.1 welded wire mesh or No. 4 rebar @ 1'-0" centers each way centered in slab.
10. Forms shall be inspected by the City prior to placing concrete. No Exceptions.
11. Lip height shall be 1-3/4" (plus/minus 1/4").
12. Vehicle approaches per this standard required for all driveways.
13. In areas with rolled curb, the number of driveways shall not exceed the number of curb cuts allowed per lot (as per Zoning Code Section 6-4).
14. Allowed gradient per Driveway Grade Limitation Standard Drawing.

REVISIONS	
DATE	DESCRIPTION

SIGNED AND DATED

PROFESSIONAL ENGINEER REGISTERED 8832 5-19-14 STATE OF IDAHO KEVIN LILLY

DRAFTED BY: K.Kipp / C.Edwards

CHECKED BY: K.Lilly

DRAWING SCALE: NOT TO SCALE

DATE: 3-5-2014

DRIVEWAY APPROACHES

CITY OF MOSCOW
ENGINEERING DEPARTMENT

DRAWING NUMBER: 9

TYPICAL SECTION

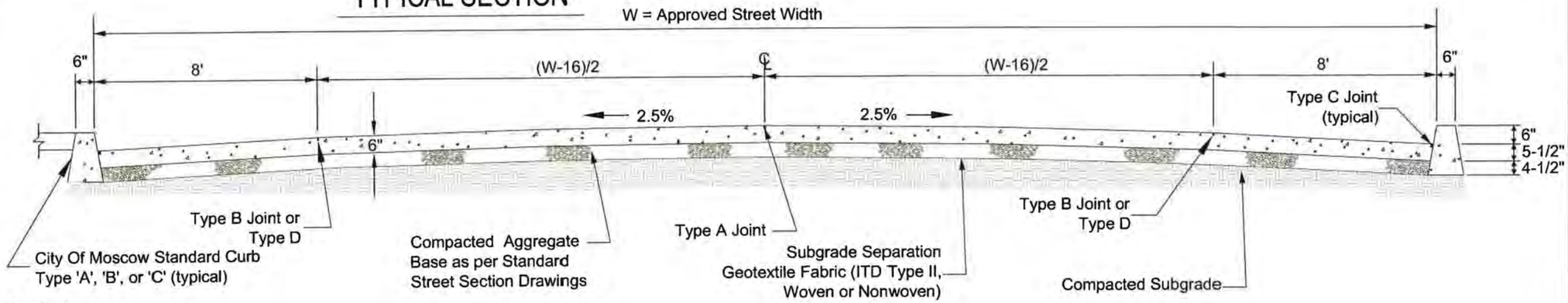

TYPE A

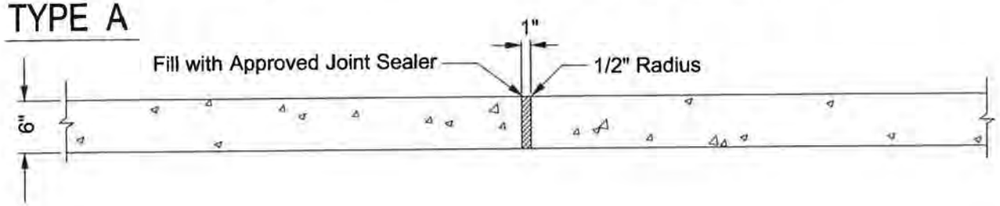

TYPE B

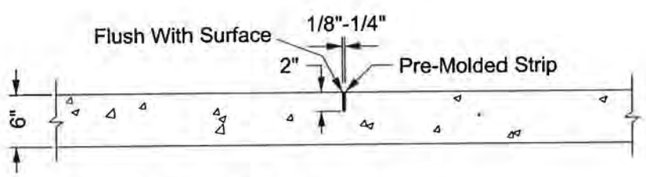

TYPE C

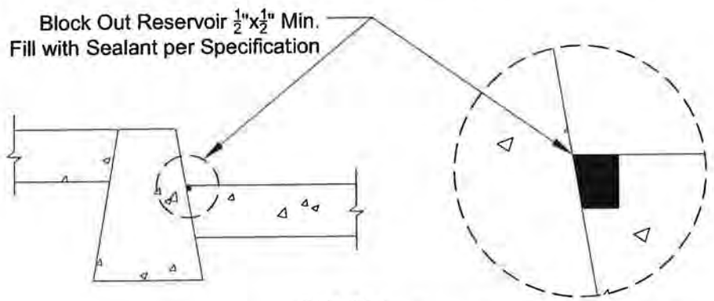

TYPE D

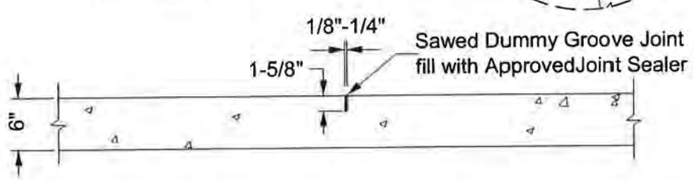

TYPE E

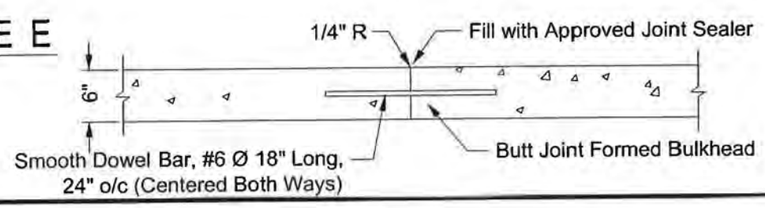

JOINT LAYOUT PLAN

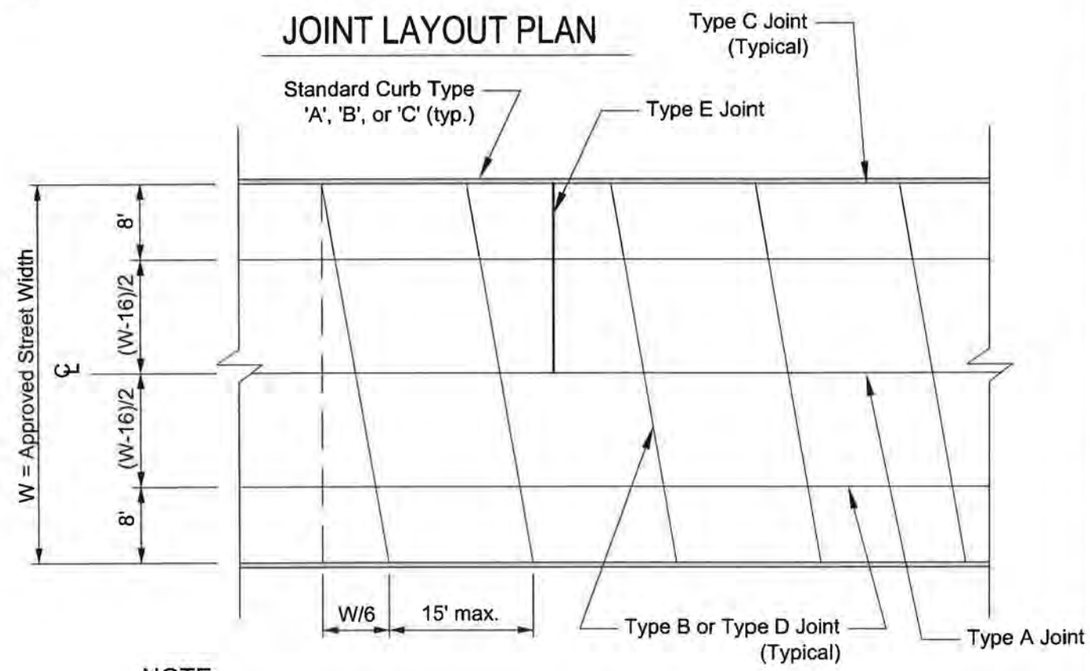

NOTE:

1. The repair of cement concrete street shall include the installation of 9" long 5/8" diameter steel dowels @ 1'-0" o/c @ mid slab, drilled and tightly driven or epoxied 4.5" into the existing slab.
2. Contractor shall submit a pavement joint pattern for entire project for approval by City Engineer.
3. When possible, manholes and other appurtenances shall be centered between joints.
4. Compact all subgrade and base aggregate to 95% of AASHTO T99 max. proctor density.
5. Cement concrete pavement allowed when approved by the City Engineer.

REVISIONS	
DATE	DESCRIPTION

SIGNED AND DATED

PROFESSIONAL ENGINEER REGISTERED 8832 5-19-14 STATE OF IDAHO KEVIN LILLY

DRAFTED BY: K.Kipp / C.Edwards

CHECKED BY: K.Lilly

DRAWING SCALE: NTS

DATE: 3-5-2014

CEMENT CONCRETE PAVEMENT

CITY OF MOSCOW
ENGINEERING DEPARTMENT

DRAWING NUMBER: 10

NOTE:

1. CITY CODE HAS PRECEDENCE OVER THIS DRAWING. Parking lots shall conform strictly to the Off-Street Parking Requirements of City Code (Title 4, Section 6-5).
2. See also ADA Standards and International Building Code for Design Accessibility.
3. Single ADA accessible vehicle spaces require a five foot (5') access aisle. Van accessible stalls shall have an eight foot (8') wide aisle width. Two (2) ADA accessible spaces may share a common access aisle with a minimum width of eight feet (8'). Spaces to be standard vehicle size.
4. Dimensions shown are minimum; user friendly lots exceed these dimensions.
5. Fire Code requirements relative to traffic aisle width have precedence over this drawing.
6. Sidewalk adjacent to curb shall slope -2.0% or -1% toward curb.
7. Parking lot typical section is 2" AC over 6" of 3/4-inch base with geotextile fabric.

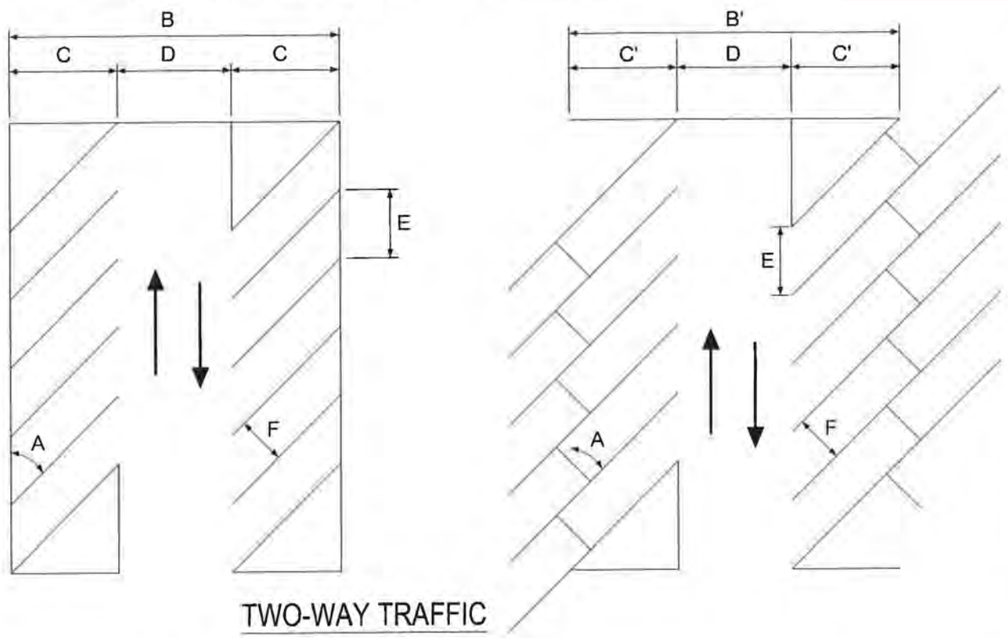

TWO-WAY TRAFFIC

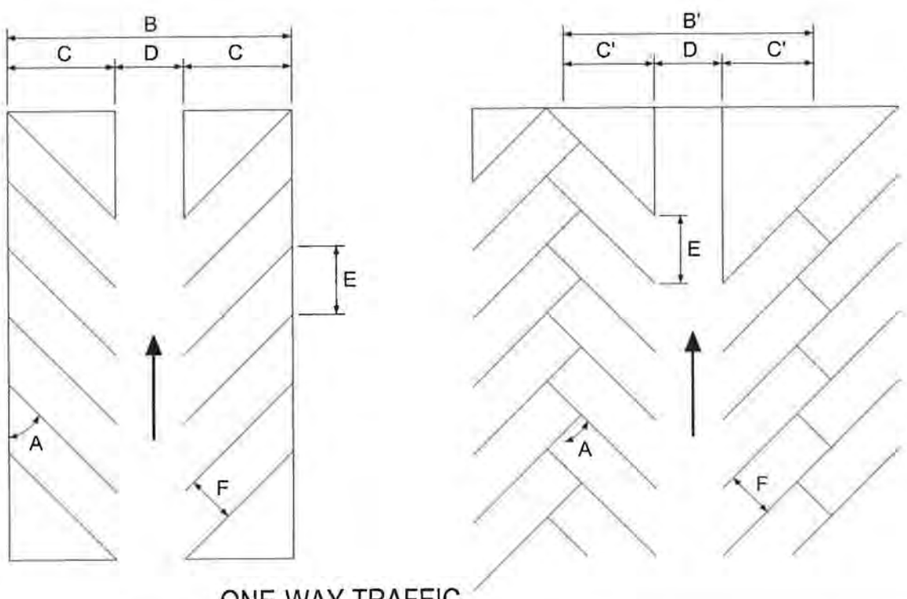

ONE-WAY TRAFFIC

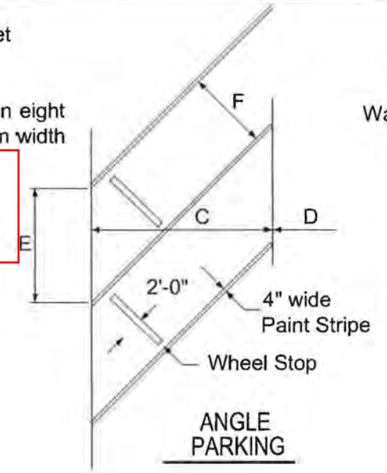

ANGLE PARKING

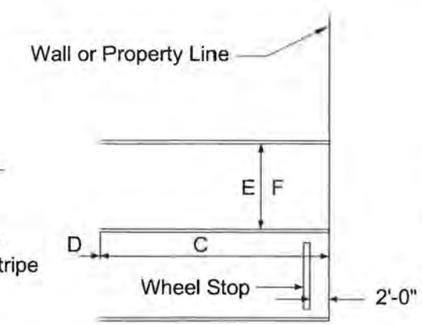

PERPENDICULAR PARKING

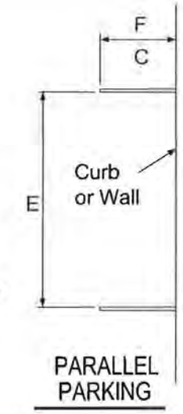

PARALLEL PARKING

Minimum Number of Accessible Parking Spaces
ADA Standards for Accessible Design 4.1.2(5)

Total Parking Spaces In Lot	Total Minimum Accessible Spaces	*Spaces Requiring Van Accessible 8' Access Aisle*
1 to 25	1	*1*
26 to 50	2	*1*
51 to 75	3	*1*
76 to 100	4	*1*
101 to 150	5	*1*
151 to 200	6	*1*
201 to 300	7	*1*
301 to 400	8	*1*
401 to 500	9	*2*
501 to 1000	2% of Total	*1/8 of Total Minimum Accessible Spaces*
1001 and over	20 plus 1 for each 100 over 1000	

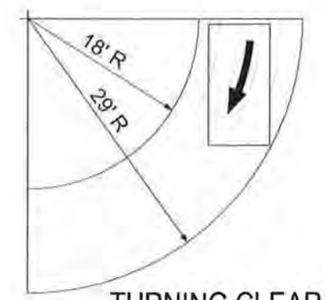

TURNING CLEARANCES

A PARKING ANGLE	B PARKING SECTION WIDTH	C PARKING BANK WIDTH	D TRAFFIC AISLE WIDTH	E CURB LENGTH PER CAR	F CAR STALL WIDTH	B' PARKING SECTION WIDTH	C' PARKING BANK WIDTH
TWO WAY TRAFFIC STANDARD VEHICLES							
0°	36'	8'	20'	23'	8'		
45°	58'	19'	20'	12'	8.5'	51'	15.5'
60°	60'	20'	20'	9.8'	8.5'	55'	17.5'
90°	64'	20'	24'	9'	9'		
TWO WAY TRAFFIC COMPACT VEHICLES							
0°	35'	7.5'	20'	15'	7.5'		
45°	52'	16'	20'	10.6'	7.5'	47'	13.3'
60°	54'	16.8'	20'	8.7'	7.5'	50'	14.9'
90°	50'	15'	20'	7.5'	7.5'		
ONE WAY TRAFFIC STANDARD VEHICLES							
0°	28'	8'	12'	23'	8'		
45°	50'	19'	12'	12'	8.5'	43'	15.5'
60°	55'	20'	15'	9.8'	8.5'	50'	17.5'
ONE WAY TRAFFIC COMPACT VEHICLES							
0°	27'	7.5'	12'	15'	7.5'		
45°	44'	16'	12'	10.6'	7.5'	39'	13.3'
60°	49'	16.8'	15'	8.7'	7.5'	45'	14.9'

REVISIONS

DATE	DESCRIPTION

SIGNED AND DATED

PROFESSIONAL ENGINEER REGISTERED 8832 5-19-14 STATE OF IDAHO KEVIN LILLY

DRAFTED BY: MAS/KWK/CEE

CHECKED BY: K.Lilly

DRAWING SCALE: NTS

DATE: 1-27-2012

PARKING LOT

CITY OF MOSCOW
ENGINEERING DEPARTMENT

DRAWING NUMBER: 11

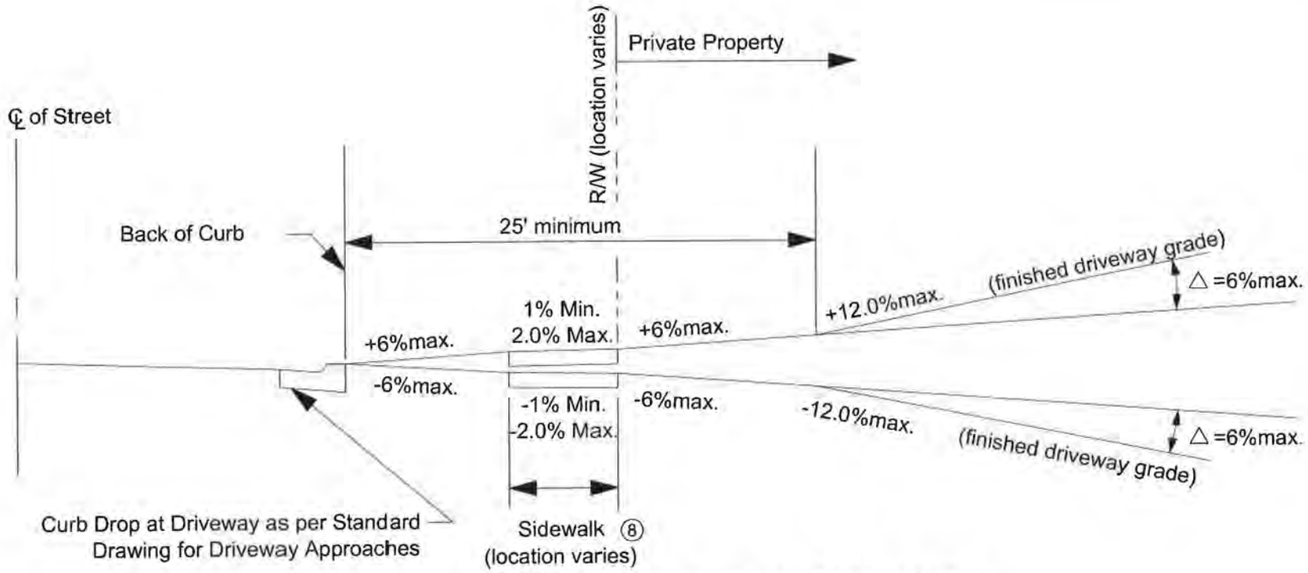

TYPE I DRIVEWAY

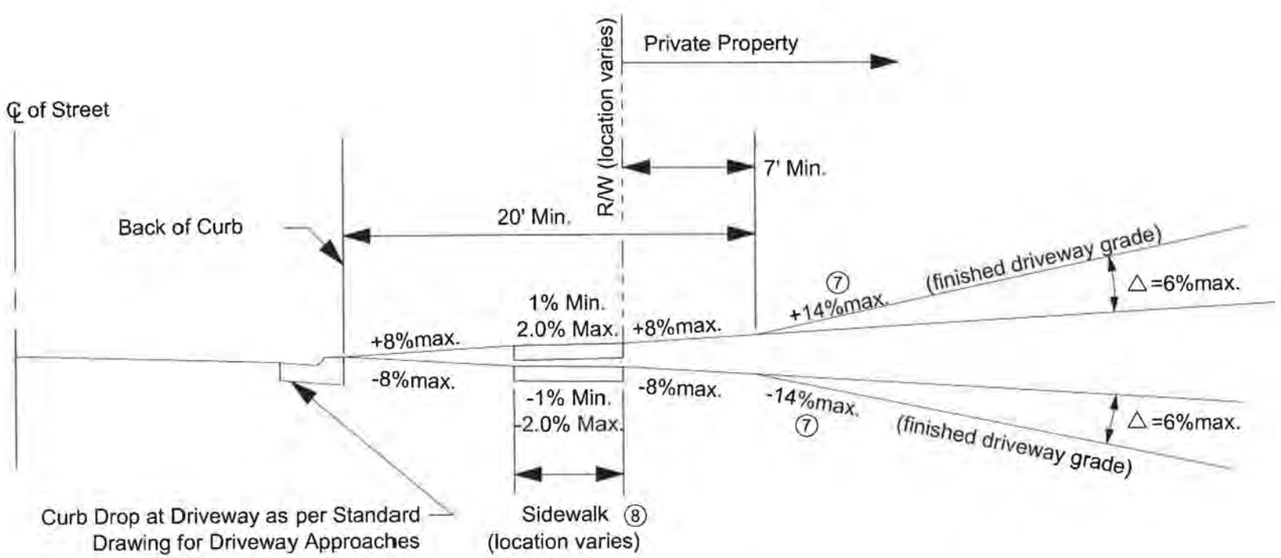

TYPE II DRIVEWAY

NOTES:

1. TYPE I DRIVEWAY applies to all driveways except those for single family dwellings and duplexes.
2. TYPE II DRIVEWAY applies to single family and duplex lots.
3. Driveway grade must also match existing sidewalk elevation. The City Engineer may allow reconstruction of the sidewalk for the purpose of matching a proposed driveway grade. ADA Standards Apply.
4. Maximum cross slope of driveways shall not exceed 5.0%.
5. Maximum slope of parking areas and aisles shall not exceed 5.0% in any direction.
6. Noted grades measured at driveway centerline.
7. Or as approved by the Building Official.
8. Sidewalk adjacent to curb shall slope -2.0% or -1% towards curb.

REVISIONS	
DATE	DESCRIPTION

SIGNED AND DATED

PROFESSIONAL ENGINEER REGISTERED 8832 5-19-14 STATE OF IDAHO KEVIN LILLY

DRAFTED BY: K.Kipp, C.Edwards

CHECKED BY: K.Lilly

DRAWING SCALE: N T S

DATE: 2-27-2014

DRIVEWAY GRADE LIMITATIONS

CITY OF MOSCOW
ENGINEERING DEPARTMENT

DRAWING NUMBER: 12

NOTES:

1. The locations of City water, sanitary sewer and storm sewer mains shown are preferred where possible; curvilinear street alignment and tangent utility runs dictate other locations, as approved by the City Engineer.

2. The 'community' style mailboxes shall be placed in locations approved by both the Postal Service and the City Engineer. The Developer is responsible for the construction of 'community' mailbox concrete support slab, all in accordance with U.S. Postal Service construction requirements. The support slab shall extend to the City sidewalk.

3. Utility poles (wood, metal, or other) shall be located with 1.5' minimum clearance from back of curb to face of pole or 1.0' minimum from back of sidewalk to face of pole. Sign posts shall be located 1.5' minimum from back of curb; their location shall also conform to MUTCD requirements.

4. Franchise utilities, including pedestals shall be located within street right-of-way or public utility easement and as shown on the Standard Drawing for Franchise Utility Details.

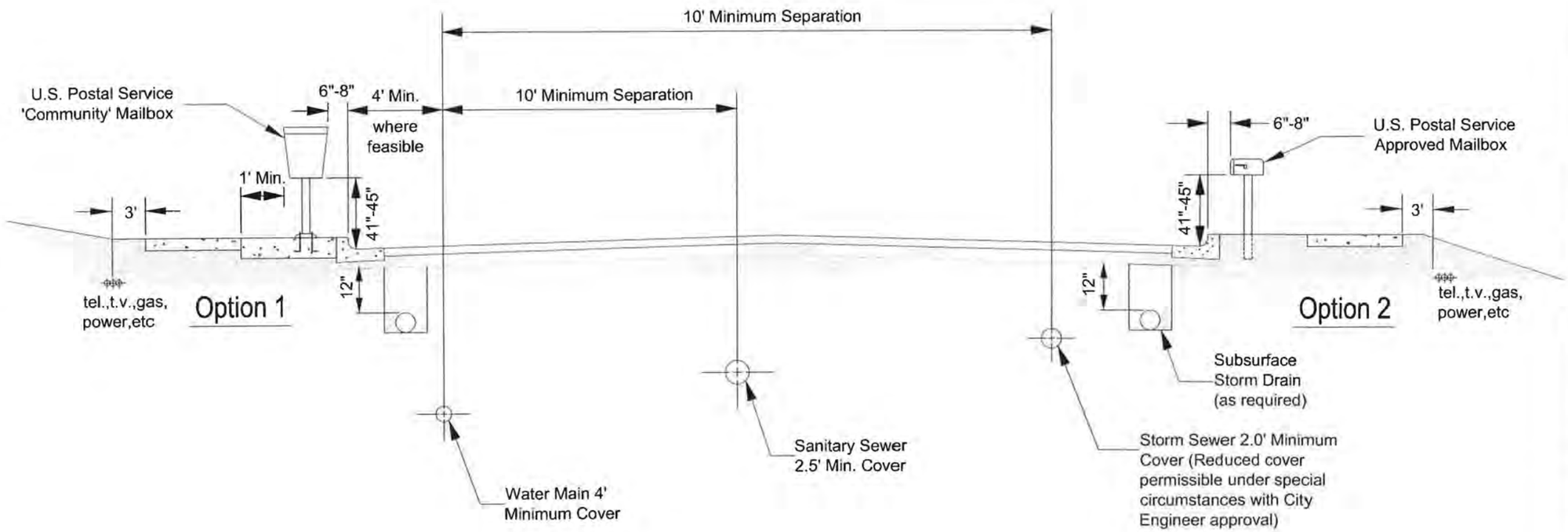

TYPICAL SECTION

REVISIONS	
DATE	DESCRIPTION

SIGNED AND DATED

PROFESSIONAL ENGINEER REGISTERED 8832 5-19-14 STATE OF IDAHO KEVIN LILLY

DRAFTED BY: K.Kipp / M.Sass

CHECKED BY: K.Lilly

DRAWING SCALE: NTS

DATE: 3-31-2014

UTILITY & MAIL BOX LOCATIONS

CITY OF MOSCOW
ENGINEERING DEPARTMENT

DRAWING NUMBER: 13

ROAD CROSSING FOR SECONDARY PEDESTAL (Typical)

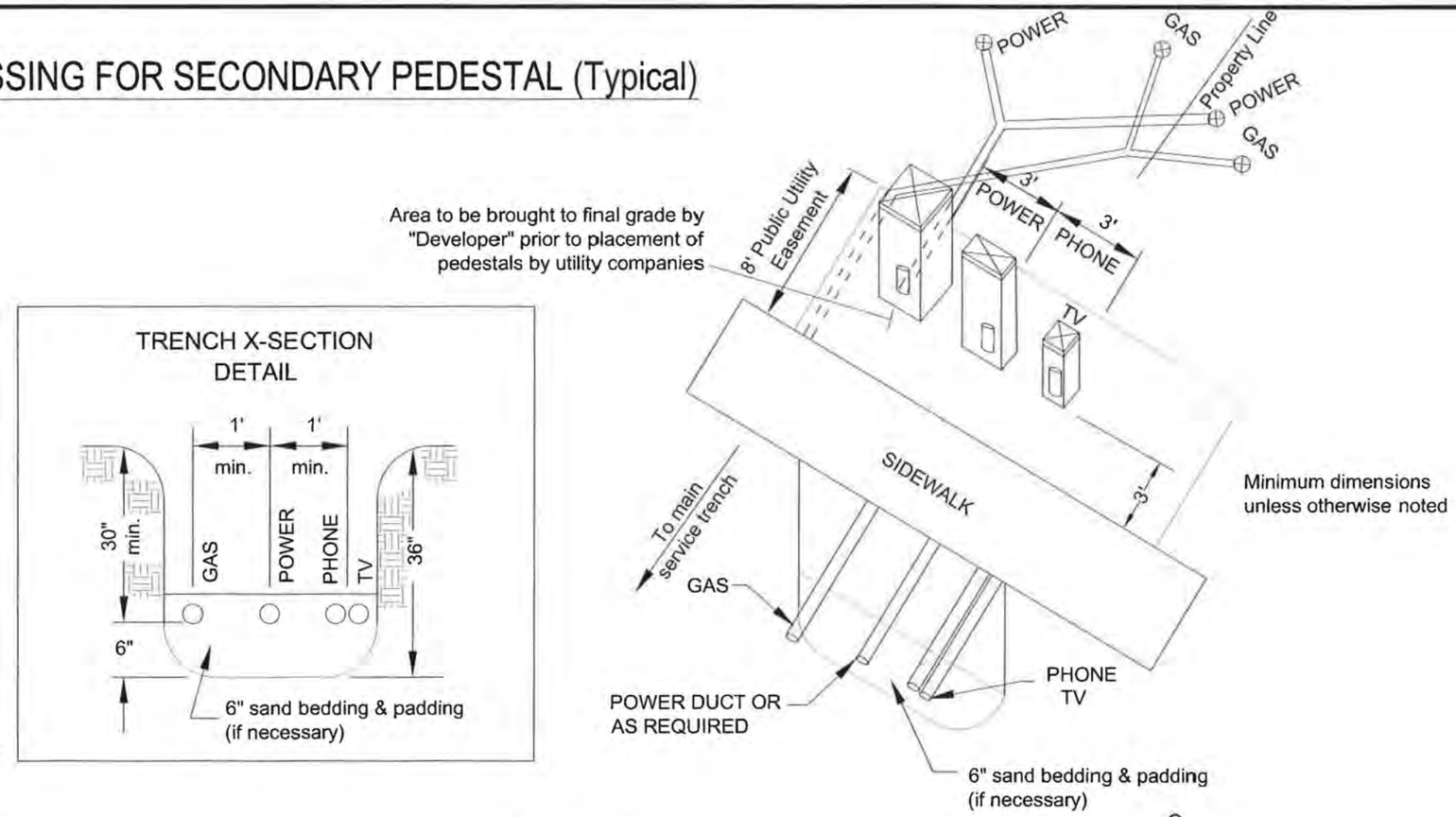

NOTES:

1. Verify conduit sizes with utilities prior to installation.
2. Bundle conduits for each utility at pedestal locations.
3. Dimensions shown are minimum unless otherwise noted.
4. Unless otherwise directed, the Gas, Power, Telephone, and T.V. Cable will be installed on the North and East sides of the street.
5. Furnish and install pull strings in all conduits.

MAIN LINE (Typical)

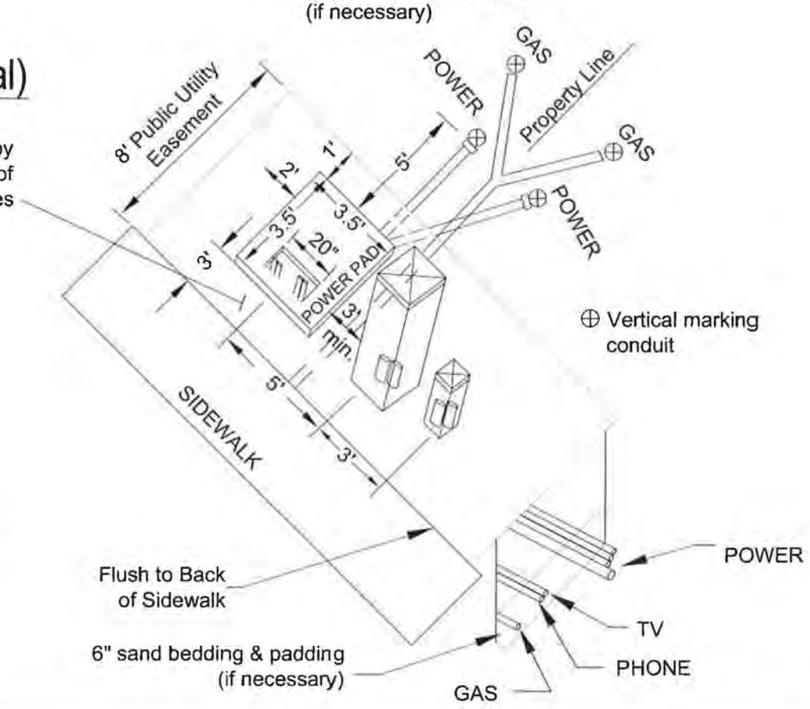

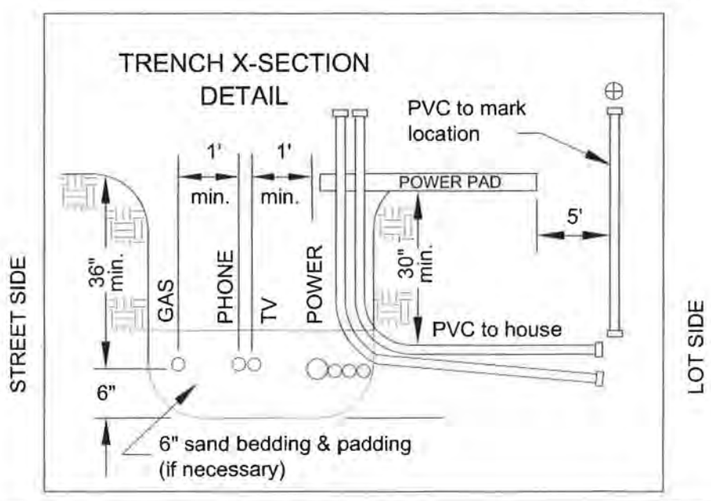

REVISIONS	
DATE	DESCRIPTION

DETAIL PROVIDED BY THE FRANCHISE UTILITY COMPANIES

DRAFTED BY: K.Kipp
CHECKED BY: K.Lilly
DRAWING SCALE: NTS
DATE: 1-30-2012

FRANCHISE UTILITY DETAILS

CITY OF MOSCOW
ENGINEERING DEPARTMENT

DRAWING NUMBER: 14

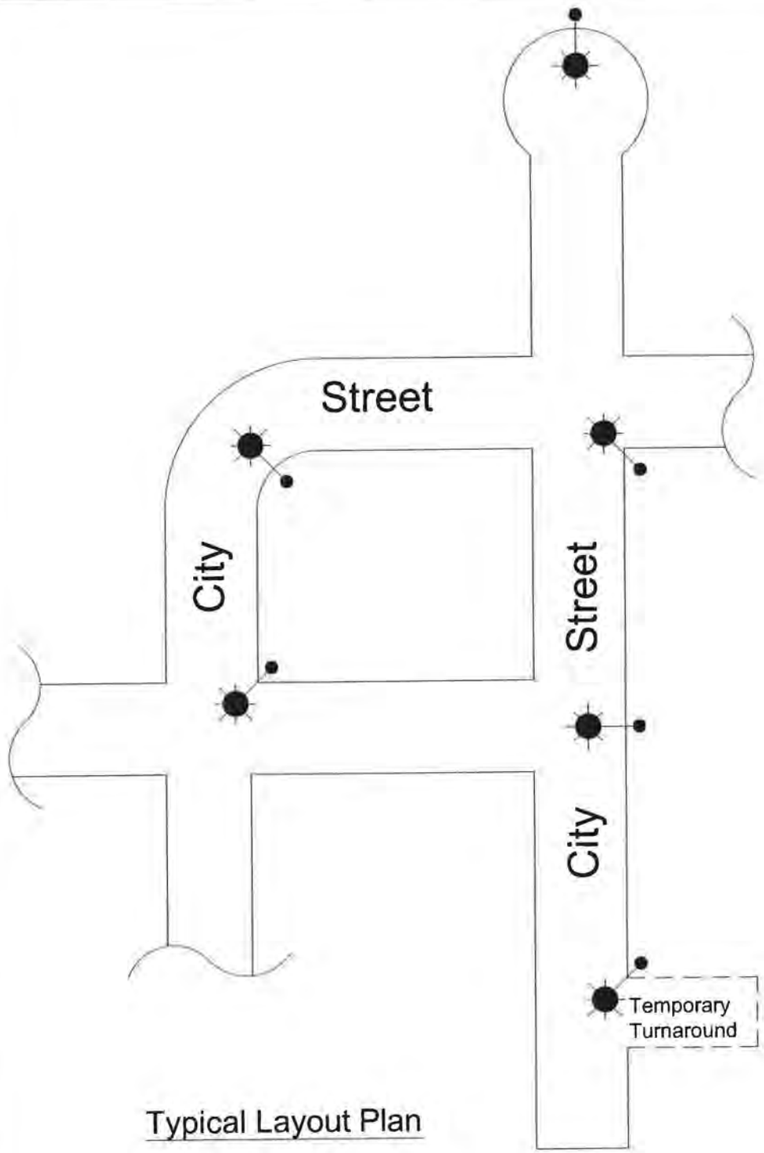

Typical Layout Plan

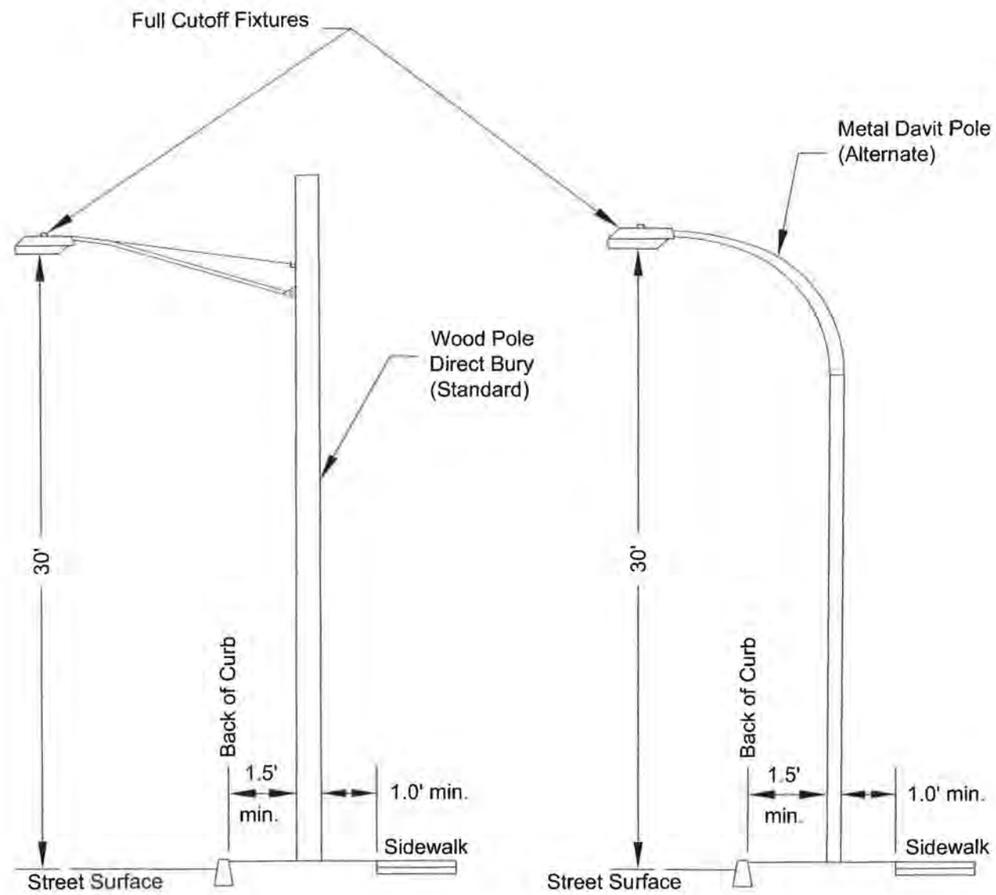

Installation Details

NOTES:

1. Street lights (pole, fixture, and conductors) to be furnished, installed, owned, and maintained by AVISTA. 'Cobra head' style light fixtures are required unless otherwise approve by the City Engineer.
2. Wood street light poles will be furnished and installed as the standard - metal davit poles are allowed but the additional/incremental costs of furnishing metal davit poles shall be paid by the Developer directly to AVISTA.
3. Developer shall furnish and install buried conduit for street lights - all as required by AVISTA - at Developer expense.
4. All street lights shall be full cut-off.
5. Street lights in residential developments will generally be installed at all four-way intersections, three-way (tee) intersections, ninety degree corners, permanent cul-de-sacs, and temporary turnarounds - one at each of these locations. Additional street lights at other locations may be as allowed or required by the City Engineer.
6. Street lights shall comply with Moscow City Code Title 4, Section 6-15.

REVISIONS	
DATE	DESCRIPTION

SIGNED AND DATED

PROFESSIONAL ENGINEER REGISTERED 8832 5-19-14 STATE OF IDAHO KEVIN LILLY

DRAFTED BY: C.Edwards
CHECKED BY: K.Lilly
DRAWING SCALE: NTS
DATE: 3-3-2014

RESIDENTIAL STREET LIGHTING

CITY OF MOSCOW
ENGINEERING DEPARTMENT

DRAWING NUMBER: 15

NOTES:

1. DEAD END signs shall be placed as near as possible to the beginning of all streets that terminate (either temporary or permanent) in a dead end or cul-de-sac. END OF ROAD MARKERS (two of them) shall be placed at the end of all terminated streets EXCEPT permanent cul-de-sacs.
2. Reflectors and reflective sheeting shall meet the requirements set forth in the most current editions of the Manual for Uniform Traffic Control Devices and Idaho Transportation Department's Standard Specifications for Highway Construction.
3. U-channel galvanized steel posts weighing 3.0 lbs./ft. and conforming to ASTM A499, or a 4"x4" treated wood post, shall be a minimum requirement. No splicing or bolting of multiple u-channels will be allowed.. All posts shall meet the Engineer's approval.
4. Theft resisting "Tufnut" brand hardware shall be used for sign installation.
5. Signs shall be installed vertically plumb.

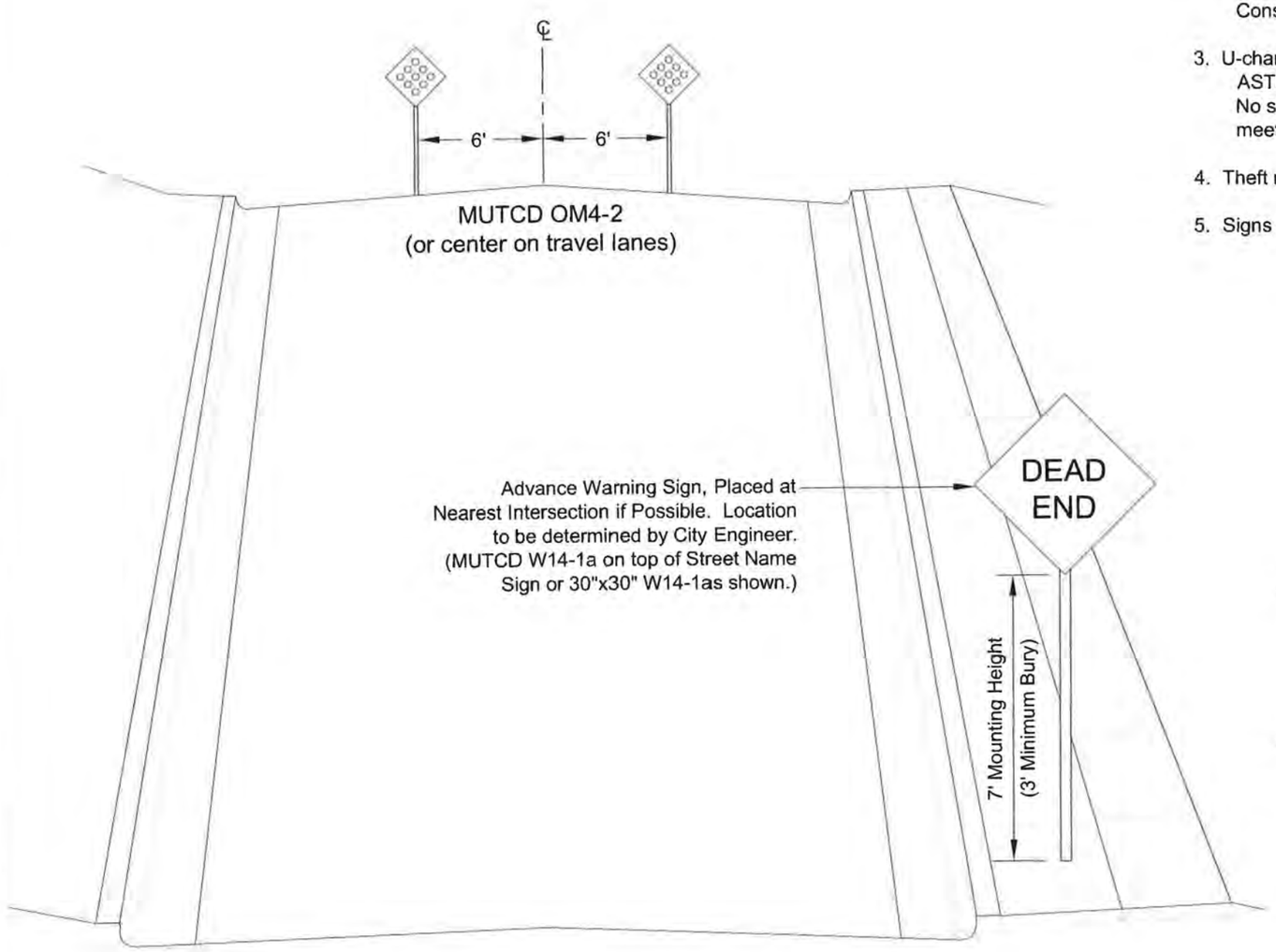

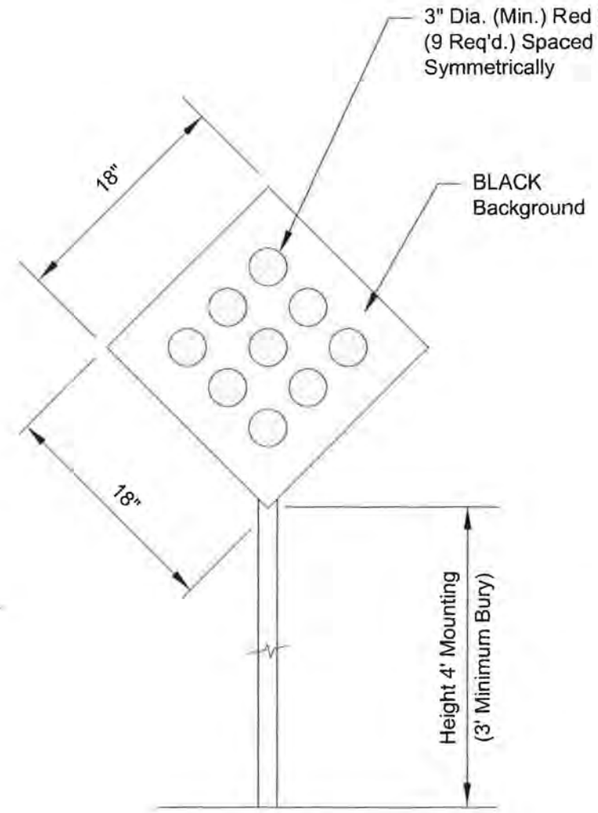

REVISIONS	
DATE	DESCRIPTION

SIGNED AND DATED

PROFESSIONAL ENGINEER REGISTERED 8832 5-19-14 STATE OF IDAHO KEVIN LILLY

DRAFTED BY: RKC/KWK

CHECKED BY: K.Lilly

DRAWING SCALE: NTS

DATE: 3-3-2014

END OF ROAD MARKERS & DEAD END SIGNS

CITY OF MOSCOW
ENGINEERING DEPARTMENT

DRAWING NUMBER: 16

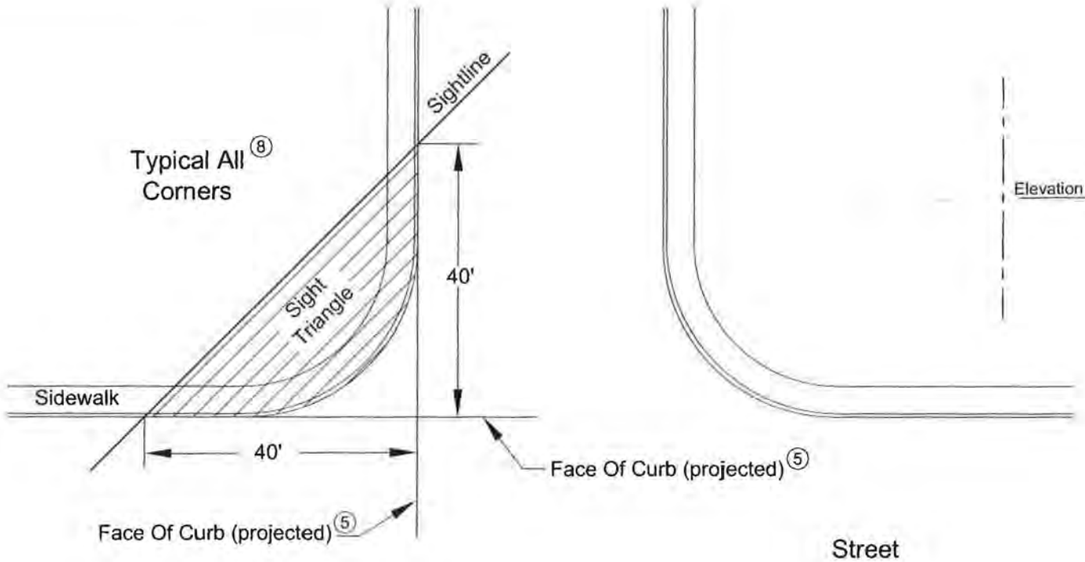

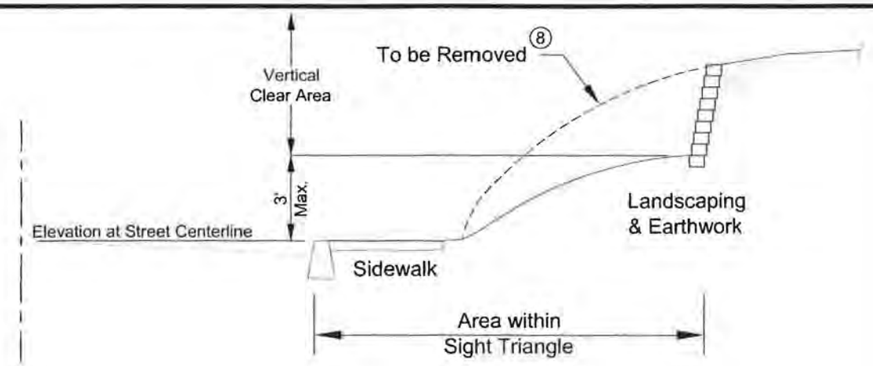

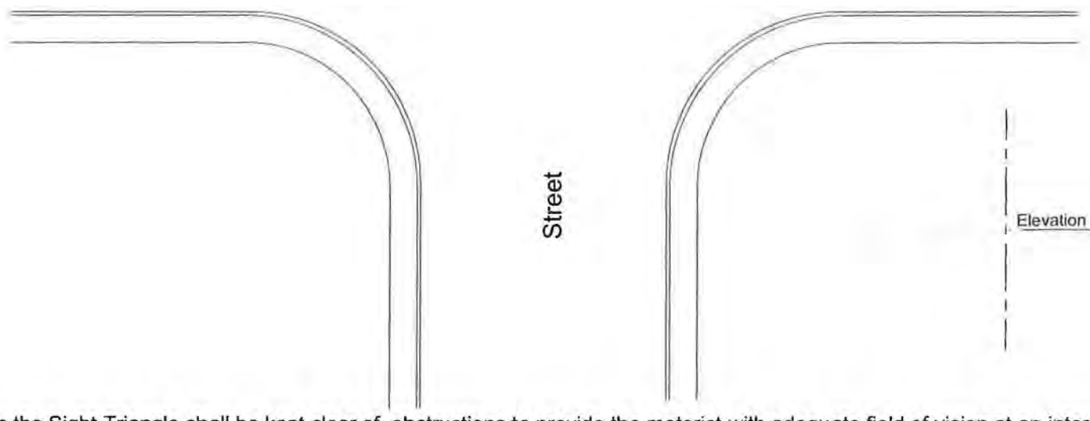

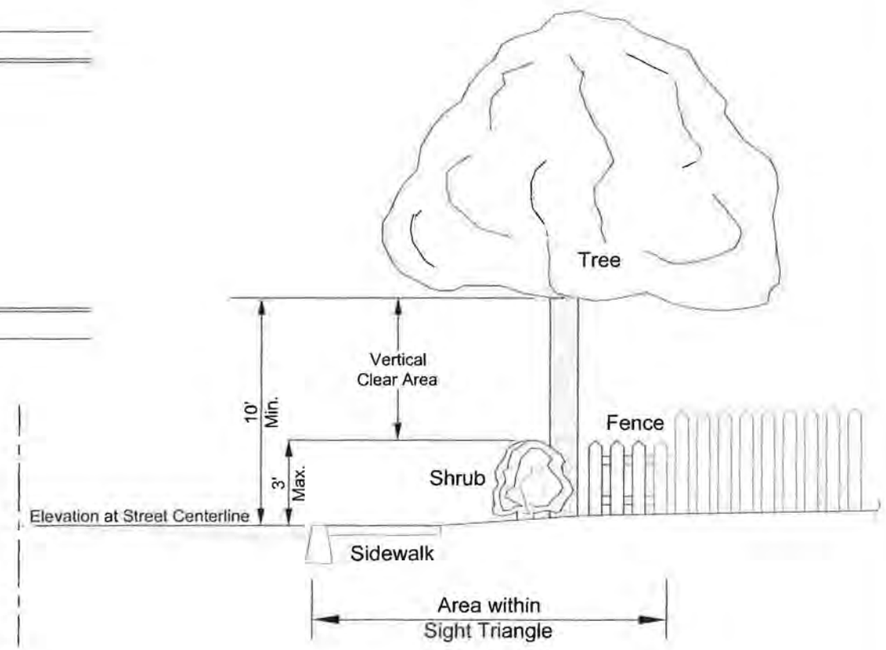

Notes:

1. Area within the Sight Triangle shall be kept clear of obstructions to provide the motorist with adequate field of vision at an intersection.
2. Within the Sight Triangle all existing trees shall be kept trimmed such that ten feet (10') of clearance exists between any branches and the ground. Any tree branches overhanging the sidewalk shall be kept trimmed such that ten feet (10') of clearance exists between any branches and the sidewalk.
3. Within the Sight Triangle, all existing shrubs shall be kept trimmed to a maximum height of three feet (3').
4. Sight obstruction Vertical Clear Area measurements shall be in reference to the existing centerline street elevation within the Sight Triangle.
5. If curb does not exist, then the Sight Triangle will be measured by extending the edges of street pavement; on unpaved streets, the Sight Triangle will be measured by extending the edge of the traveled way as determined by the City Engineer.
6. This City Standard enforces Idaho Code 49-221.
7. All dimensional criteria (as shown) must be satisfied.
8. Unusual topography may require more stringent requirements at some locations to obtain adequate Sight Triangles as determined by City Engineer.

REVISIONS	
DATE	DESCRIPTION

SIGNED AND DATED

PROFESSIONAL ENGINEER REGISTERED 8832 STATE OF IDAHO KEVIN LILLY 5-19-14

DRAFTED BY: CEE/KWK
CHECKED BY: K.Lilly
DRAWING SCALE: NTS
DATE: 3-3-2014

INTERSECTION SIGHT TRIANGLE

CITY OF MOSCOW
ENGINEERING DEPARTMENT

DRAWING NUMBER: 17

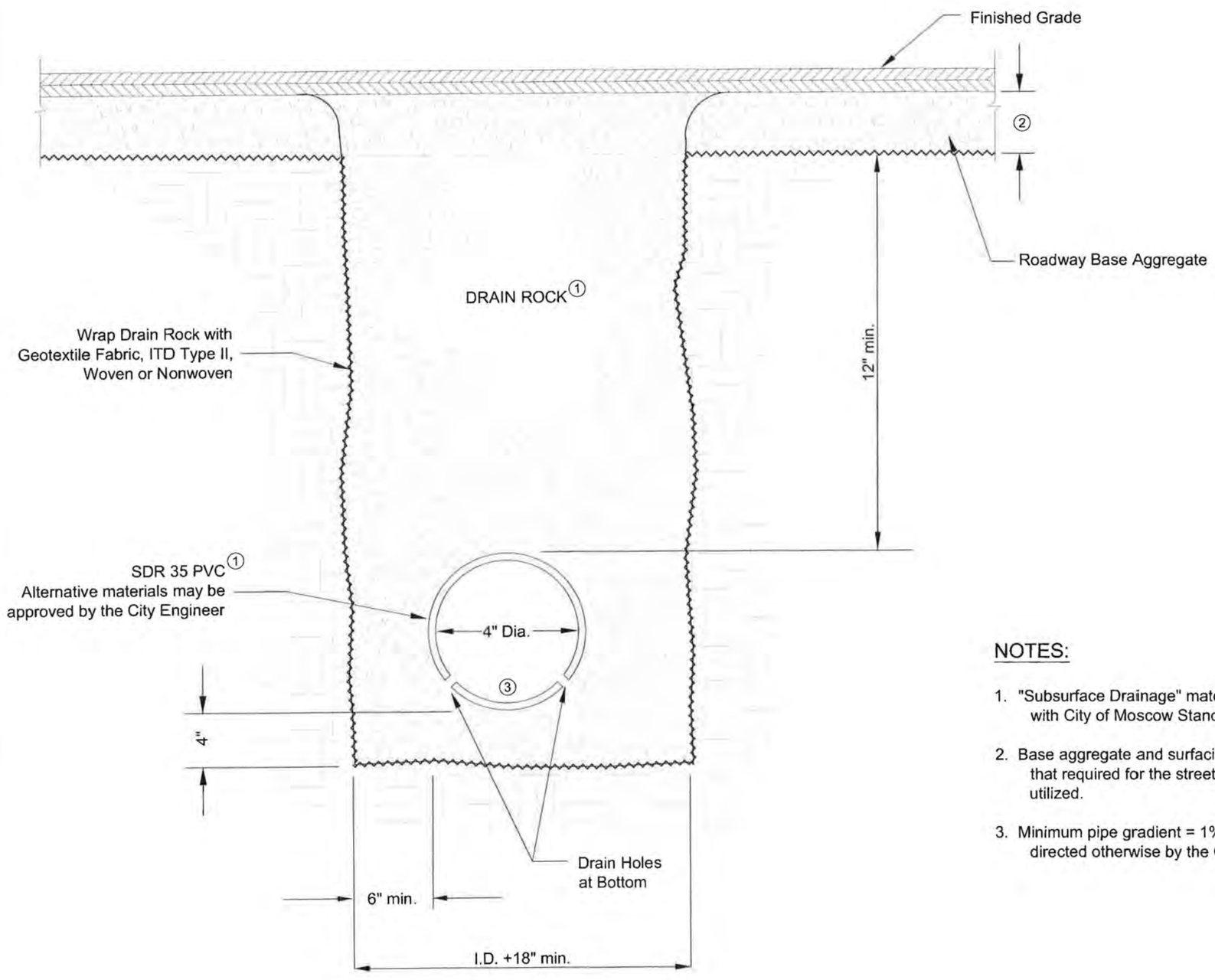

TYPICAL SECTION

NOTES:

1. "Subsurface Drainage" materials and installation shall comply with City of Moscow Standard Construction Specifications.
2. Base aggregate and surfacing depth and type to be the same as that required for the street section where this trench backfill is utilized.
3. Minimum pipe gradient = 1% unless specifically allowed or directed otherwise by the City Engineer.

REVISIONS	
DATE	DESCRIPTION

SIGNED AND DATED

PROFESSIONAL ENGINEER REGISTERED 8832 5-19-14 STATE OF IDAHO KEVIN LILLY

DRAFTED BY: KWK/CEE

CHECKED BY: K.Lilly

DRAWING SCALE: NTS

DATE: 3-3-2014

SUBSURFACE DRAINAGE

CITY OF MOSCOW
ENGINEERING DEPARTMENT

DRAWING NUMBER: 18

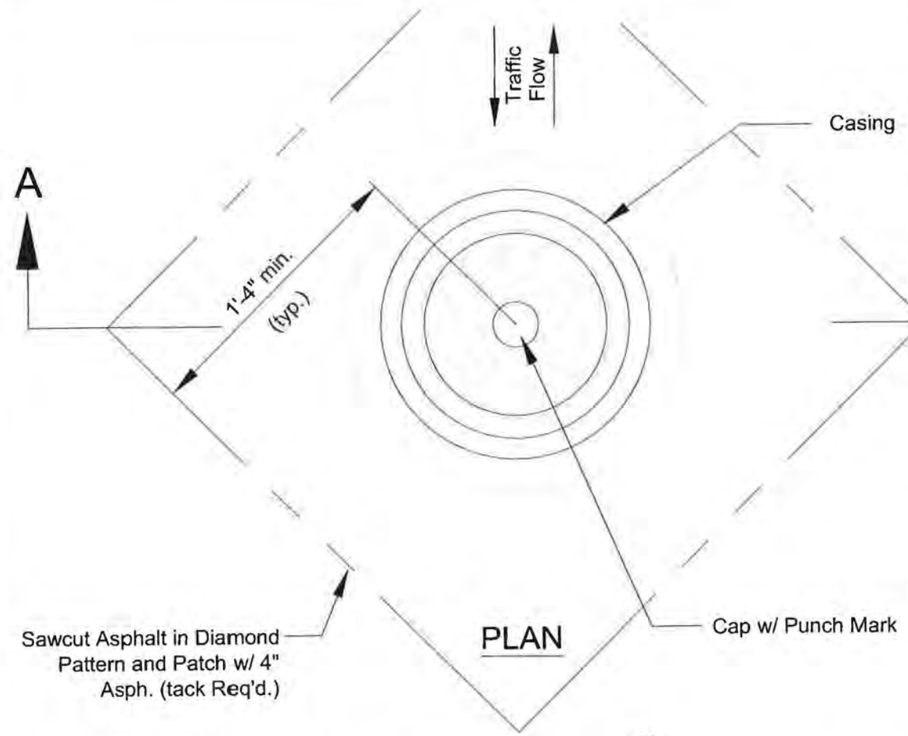

PLAN

PLAN

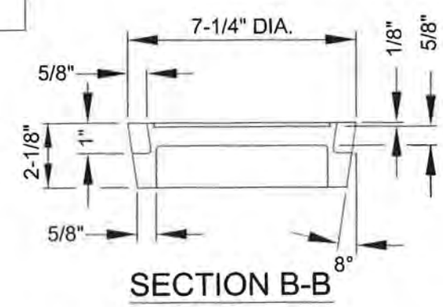

SECTION B-B

COVER DETAIL

Notes:

1. Survey caps must be securely attached to rebar or pipe.
2. Survey monuments shown on the SURVEY MONUMENT Standard Drawing may be used as street monuments.
3. Survey caps will be aluminum or brass and a punch mark placed at the exact location. Plastic caps not allowed.
4. Cover and casing shall be machined to a true bearing all around.
5. The monument casing shall be bedded in aggregate.
6. The casing and cover shall be gray iron castings suitable for heavy traffic loading; minimum unit weight = 46 lbs.
7. The installation shall result in a 'bump-free' street surface, as approved by the city engineer.
8. The cover shall include the wording as shown.
9. All materials shall be manufactured in the U.S.A.

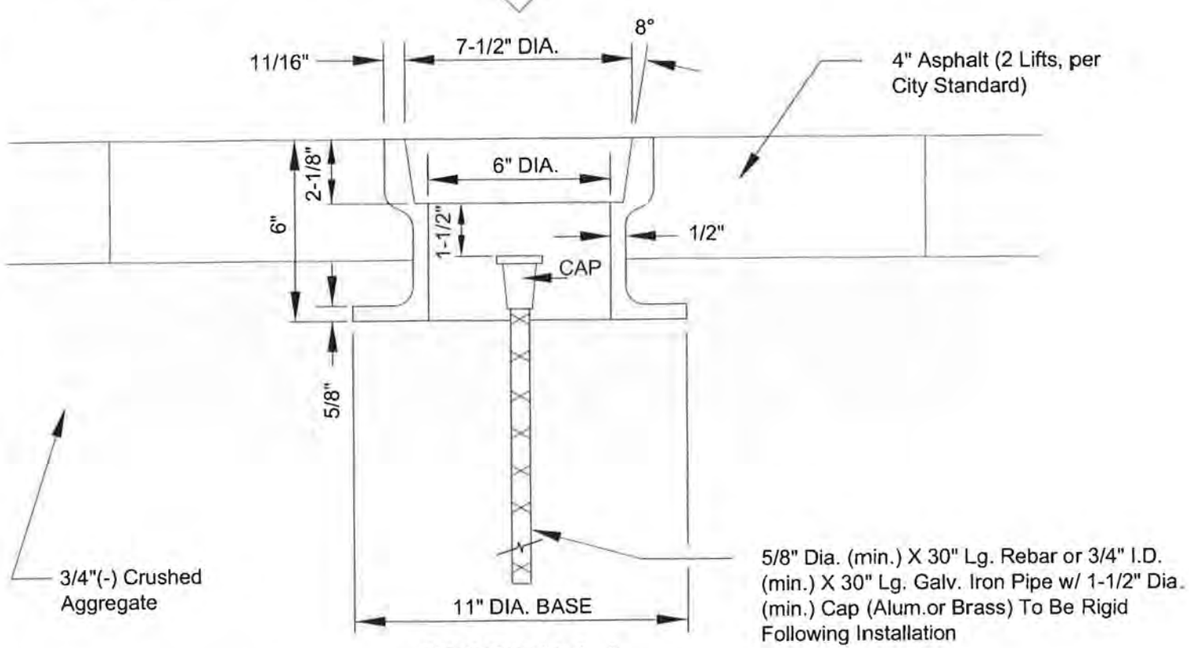

SECTION A-A

MONUMENT AND CASING DETAIL

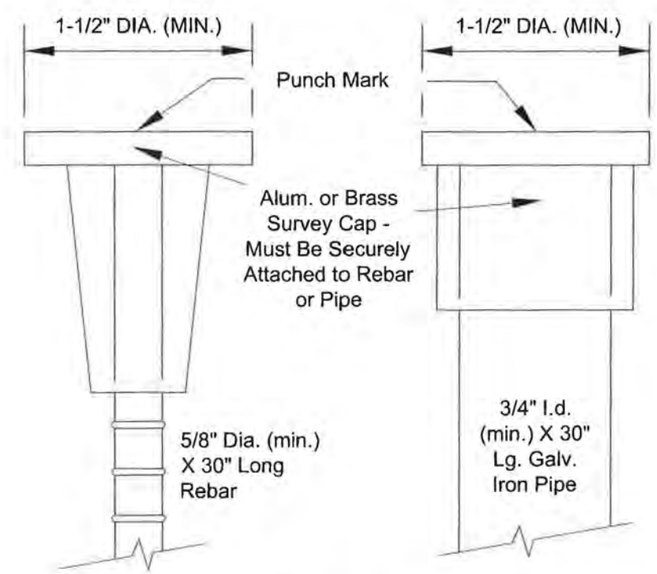

CAP DETAIL

REVISIONS	
DATE	DESCRIPTION

SIGNED AND DATED

PROFESSIONAL ENGINEER REGISTERED 8832 5-19-14 STATE OF IDAHO KEVIN LILLY

DRAFTED BY: RKC/KWK

CHECKED BY: K.Lilly

DRAWING SCALE: NTS

DATE: 1-30-2012

STREET MONUMENT

CITY OF MOSCOW
ENGINEERING DEPARTMENT

DRAWING NUMBER: 19

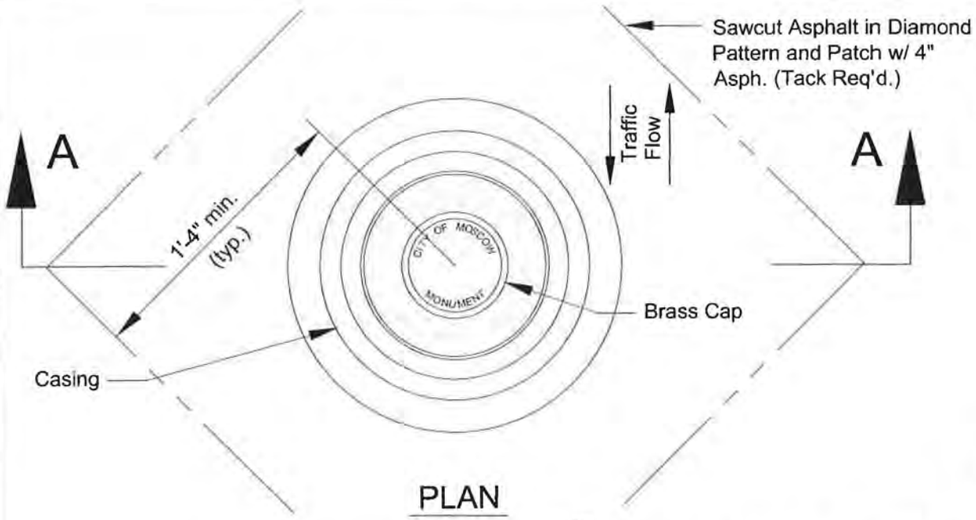

PLAN

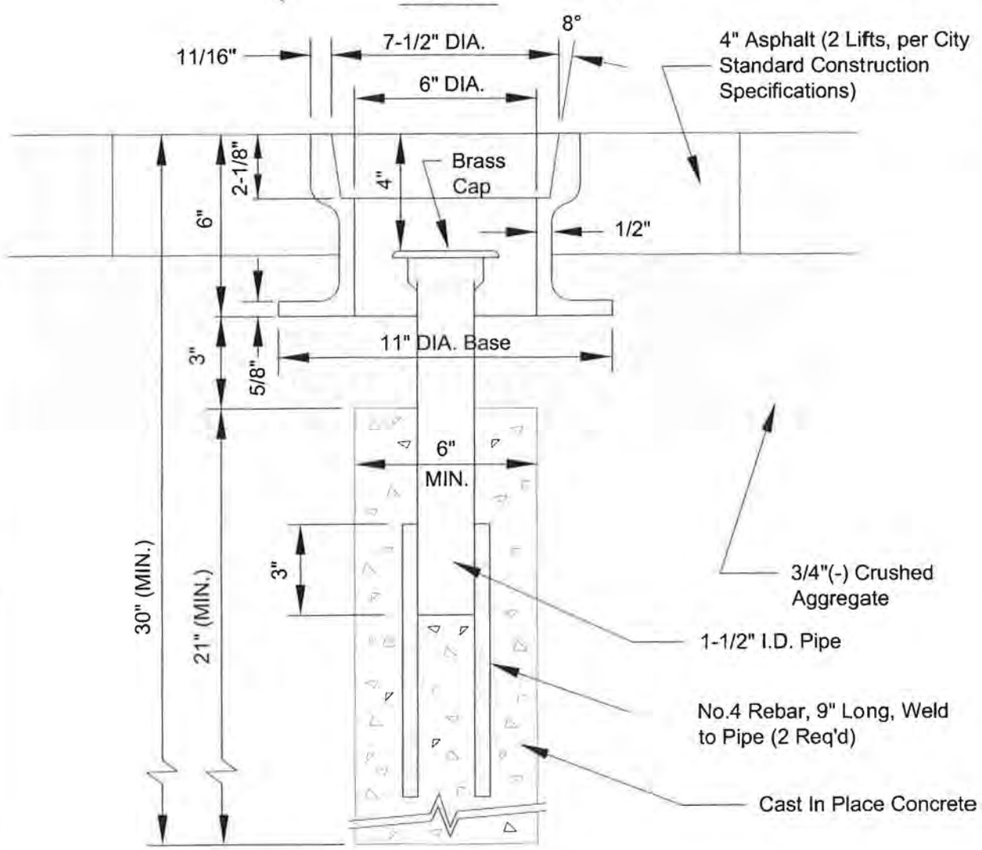

SECTION A-A

MONUMENT AND CASING DETAIL

PLAN

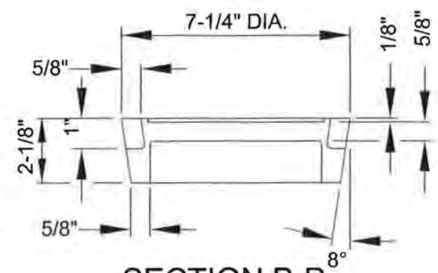

SECTION B-B

COVER DETAIL

Notes:

1. Cover and casing shall be machined to a true bearing all around.
2. The brass cap shall conform to the requirements of the most current edition of the Idaho Transportation Department's standard specification for highway construction.
3. The casing and cover shall be gray iron castings suitable for heavy traffic loading; minimum unit weight = 46 lbs.
4. All material except the brass cap shall be covered with a protective coating after welding. The coating shall be of a bituminous type or approved equal.
5. The installation shall result in a relatively 'bump-free' street surface, as approved by the city engineer.
6. The cover shall include the wording as shown.
7. All materials shall be manufactured in the U.SA.

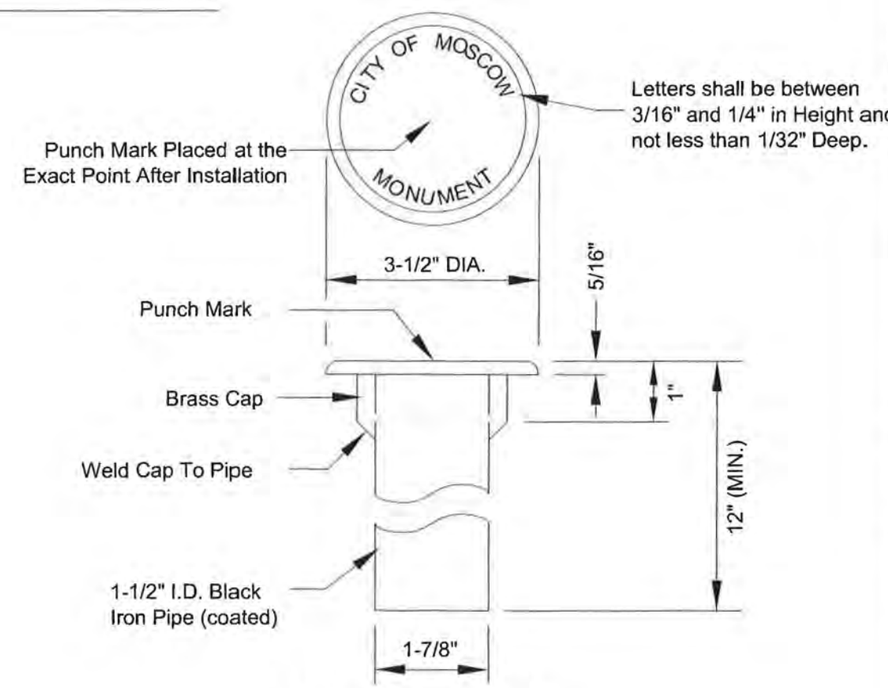

BRASS CAP AND PIPE DETAIL

REVISIONS	
DATE	DESCRIPTION

SIGNED AND DATED

PROFESSIONAL ENGINEER REGISTERED 8832 5-19-14 STATE OF IDAHO KEVIN LILLY

DRAFTED BY: RKC/KWK

CHECKED BY: K.Lilly

DRAWING SCALE: NTS

DATE: 1-31-2012

SURVEY MONUMENT

CITY OF MOSCOW
ENGINEERING DEPARTMENT

DRAWING NUMBER: 20

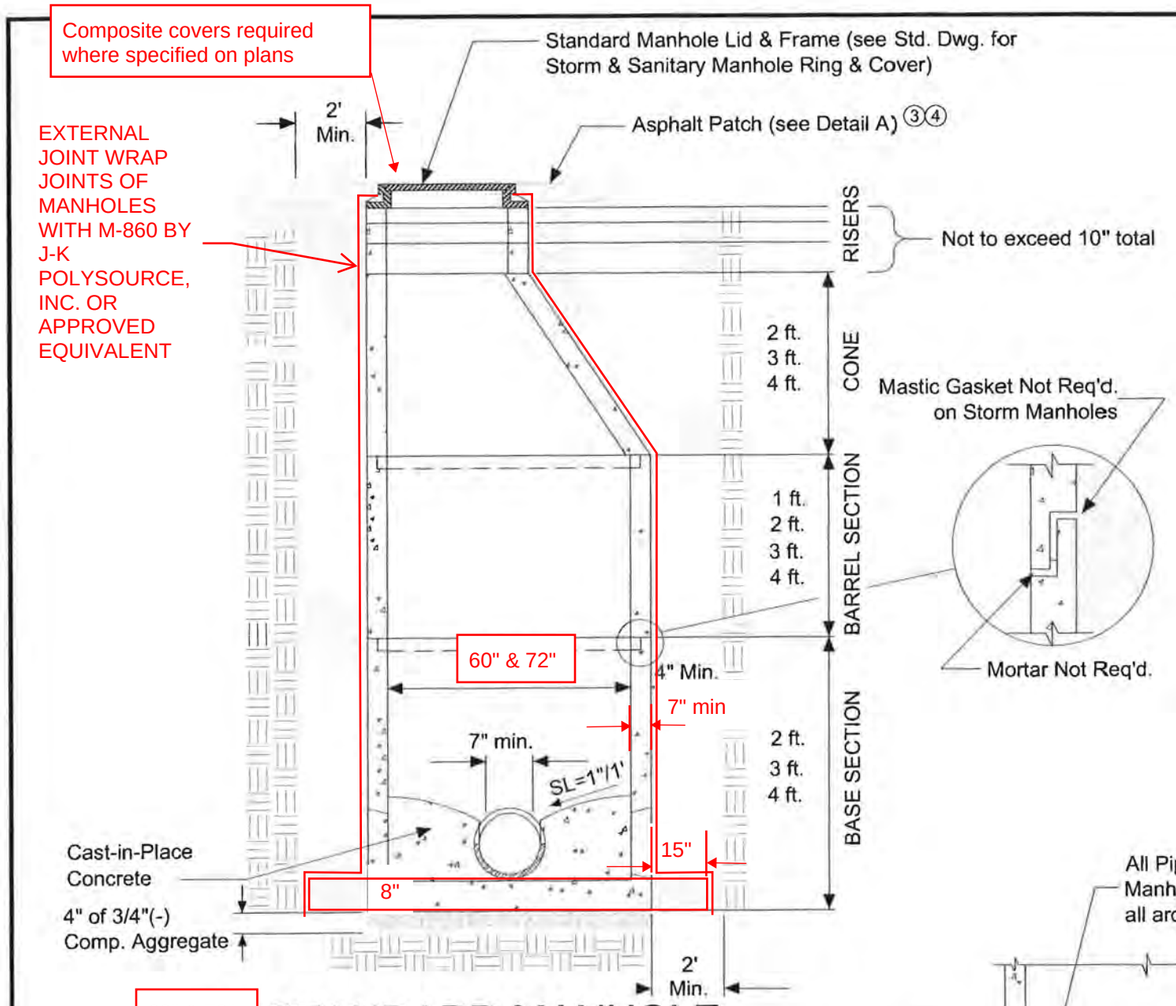

60" & 72"

STANDARD MANHOLE w/ PRECAST BASE

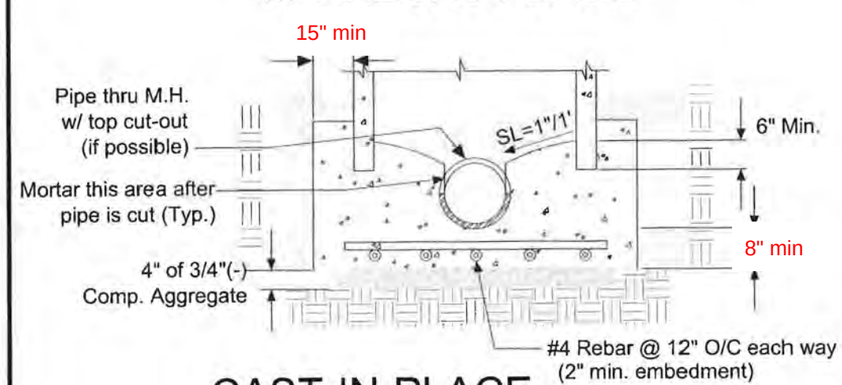

CAST-IN-PLACE ALTERNATE BASE

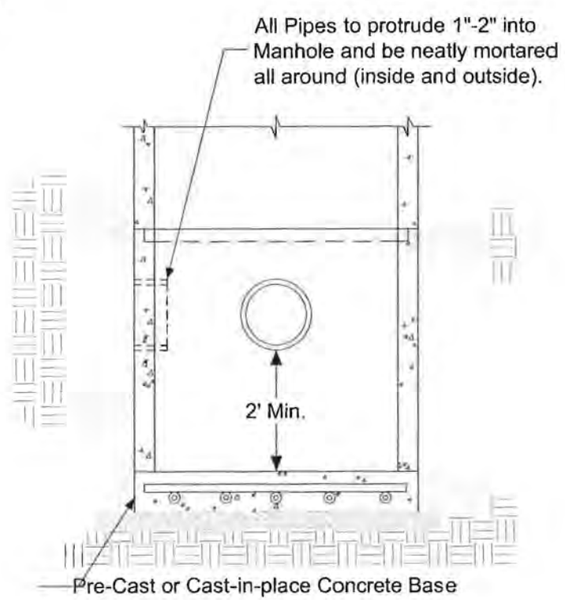

MANHOLE w/ CATCH BASE

NOTES:

1. Precast bases are preferred.
2. Steps shall not be installed in the manholes.
3. Manholes located in paved areas shall have asphaltic hot mix patch four inches (4") thick with top course mix restoring surface to exact line and grade of street. Manhole lids in new pavement shall be raised and adjusted to finished grade after completion of street paving.
4. Manholes located in unpaved streets or alleys shall have their lids adjusted to two inches (2") below gravel surface.
5. All cast-in-place concrete shall be troweled very smooth.
6. All joints between precast manhole/sections shall be very smooth.
7. All flow across manholes shall be on-tenth of a foot (0.1') fall, unless the flow changes direction more than 45°, then the fall shall be two-tenths of a foot (0.2') or greater.
8. Channels shall be as per Standard Drawing for Manhole Base Details.
9. Lids shall be set a quarter inch ($\frac{1}{4}$") below the existing paved street grade.
10. Flat slab top allowed on shallow manholes.
11. Contractors shall comply with the most current OSHA requirements for excavation.
12. WSDOT Catch Basin Type 2 may be required at certain locations by the City Engineer in place of this manhole standard.

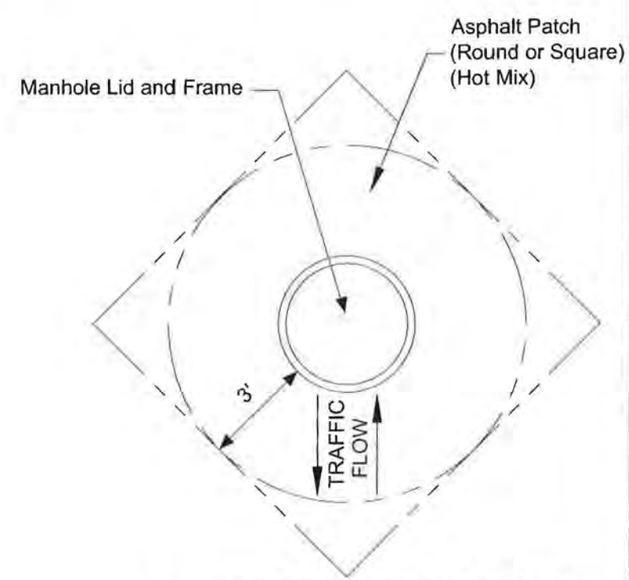

A ASPHALT PATCH DETAIL

REVISIONS	
DATE	DESCRIPTION

SIGNED AND DATED

PROFESSIONAL ENGINEER REGISTERED 8832 5-19-14 STATE OF IDAHO KEVIN LILLY

DRAFTED BY: CEE/KWK
CHECKED BY: K.Lilly
DRAWING SCALE: NTS
DATE: 3-4-2014

STORM SEWER MANHOLE

CITY OF MOSCOW ENGINEERING DEPARTMENT

DRAWING NUMBER: 21

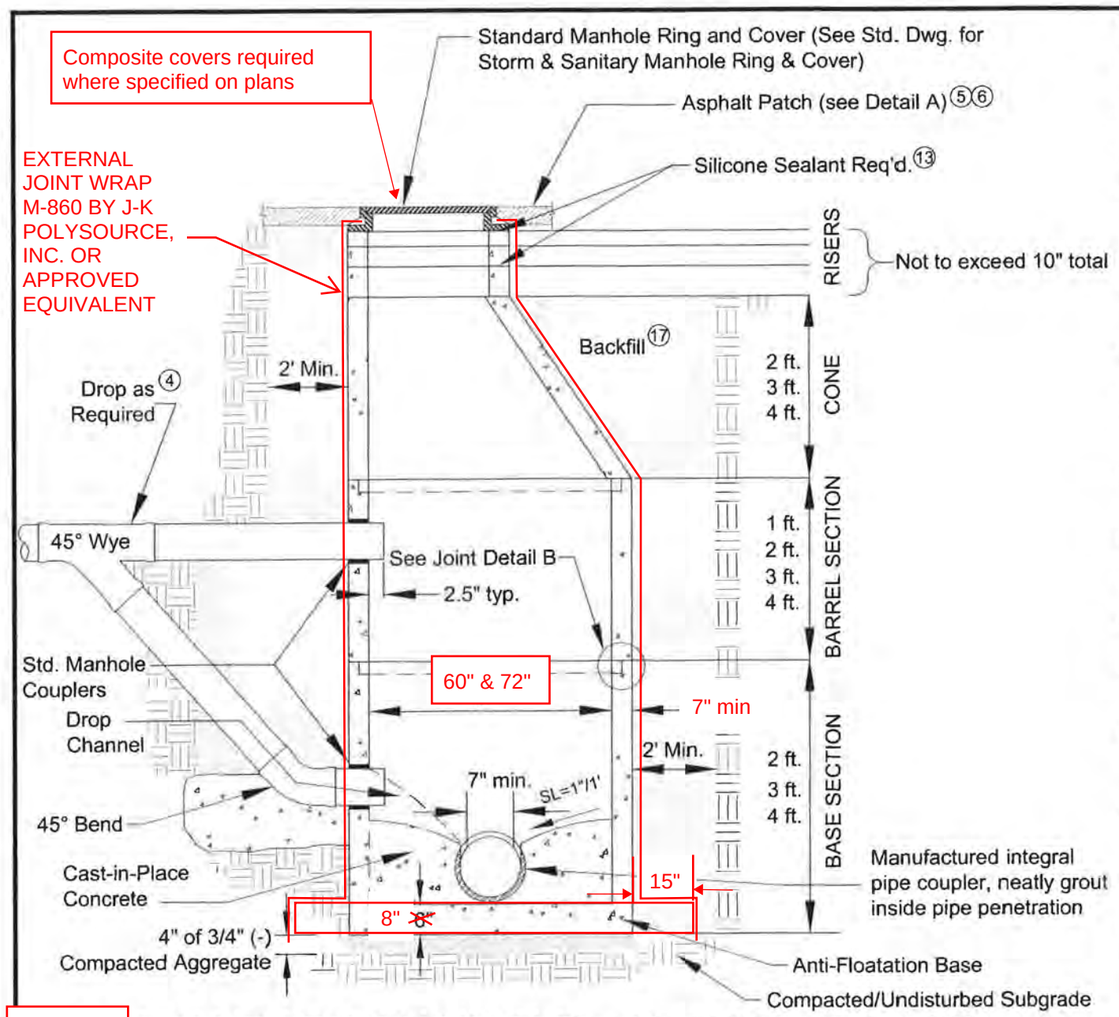

60" & 72"

STANDARD MANHOLE w/ PRECAST BASE

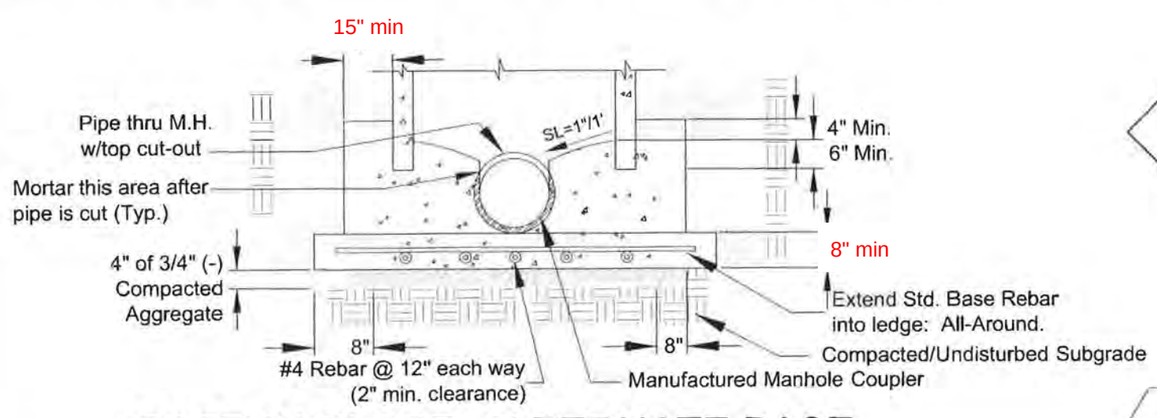

CAST-IN-PLACE ALTERNATE BASE

NOTES:

1. Precast bases with integral pipe couplers are preferred.
2. Manholes shall be constructed watertight and tested per Standard Construction Specifications.
3. Steps shall not be installed in the manholes.
4. Drop configuration is used when the entrance pipe exceeds two feet (2') above the the top of the exit pipe and only with permission of the City Engineer. Drop pipe penetrations shall be neatly mortared. Drop configuration not allowed in new manhole installations.
5. Manholes located in paved areas shall have asphaltic patch four inches (4") thick placed in two lifts to exact line and grade of street. Manhole ring shall be 1/4" below finished patch.
6. Manholes located in unpaved streets or alleys shall have lid adjusted two inches (2") below gravel surface.
7. All cast-in-place conc. shall be troweled smooth.
8. All joints between precast manhole/sections shall be sealed with mastic gaskets and finished with mortar.
9. All flow across manholes shall be one-tenth of a foot (0.1'), unless the flow changes direction more than 45°, then the fall shall be two-tenths of a foot (0.2') or greater.
10. Manufactured watertight manhole couplings required at all pipe penetrations.
11. Channels shall be per Manhole Base Details Standard Drawing.
12. Shallow manholes may be constructed with flat-top precast lids,as approved by the City Engineer.
13. Seal between riser and cone, riser and riser, and riser and frame with two parallel 3/8" diameter beads of silicone sealant.
14. Where new manholes are constructed on existing mains, or where existing manholes are modified, all pipe penetrations shall also be sealed on the exterior by the careful and ample application(s) of non-shrink grout. Groutable manufactured collars shall be used on new pipes where they enter existing manholes.
15. Manufacturer's standard O-ring joint also acceptable alternate to the standard mastic gasket and mortar joints as shown.
16. Contractor shall comply with the most current OSHA requirements for excavations.
17. Backfill around manholes shall be Class 'D' for all roadways and alleys; Class 'A' for all other locations unless specifically allowed or directed otherwise by the City Engineer.

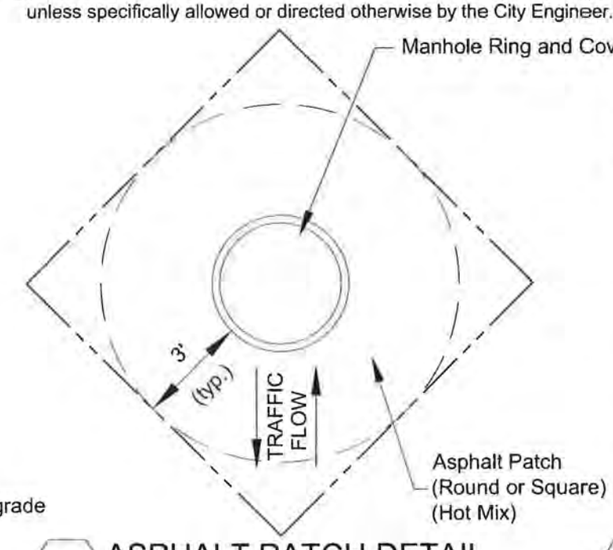

A ASPHALT PATCH DETAIL

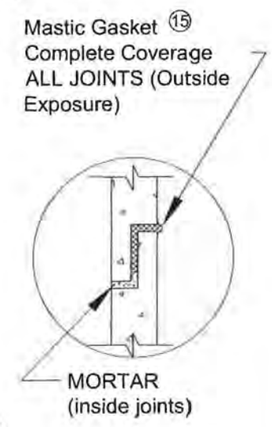

B JOINT DETAIL

REVISIONS	
DATE	DESCRIPTION

SIGNED AND DATED

PROFESSIONAL ENGINEER REGISTERED 8832 5-19-14 STATE OF IDAHO KEVIN LILLY

DRAFTED BY: CEE/KWK

CHECKED BY: K.Lilly

DRAWING SCALE: NTS

DATE: 3-4-2014

SANITARY SEWER MANHOLE

CITY OF MOSCOW ENGINEERING DEPARTMENT

DRAWING NUMBER: 22

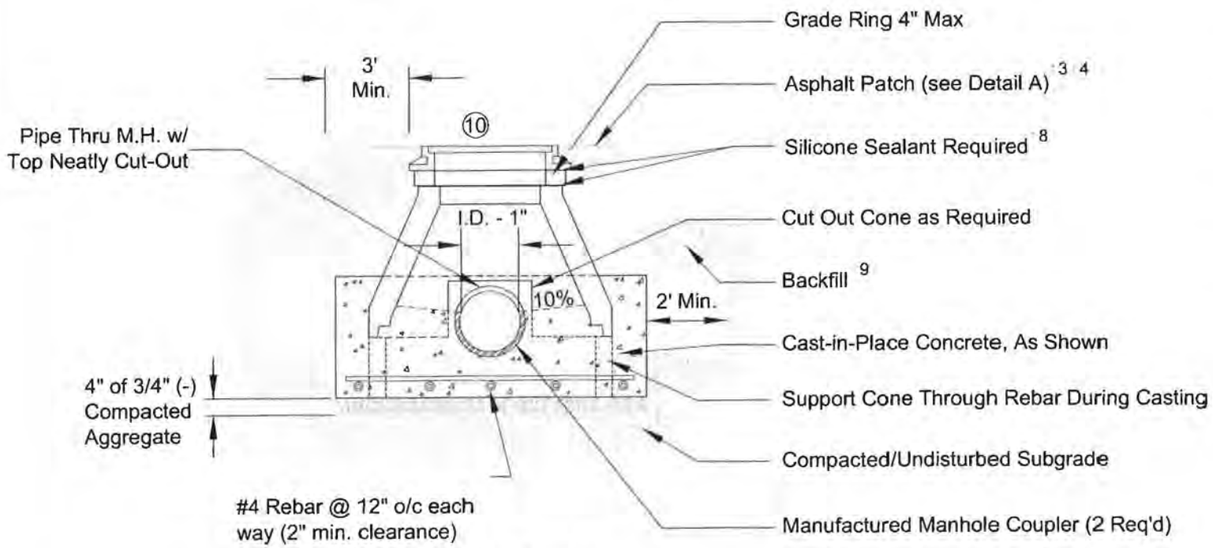

SECTION 1
NTS

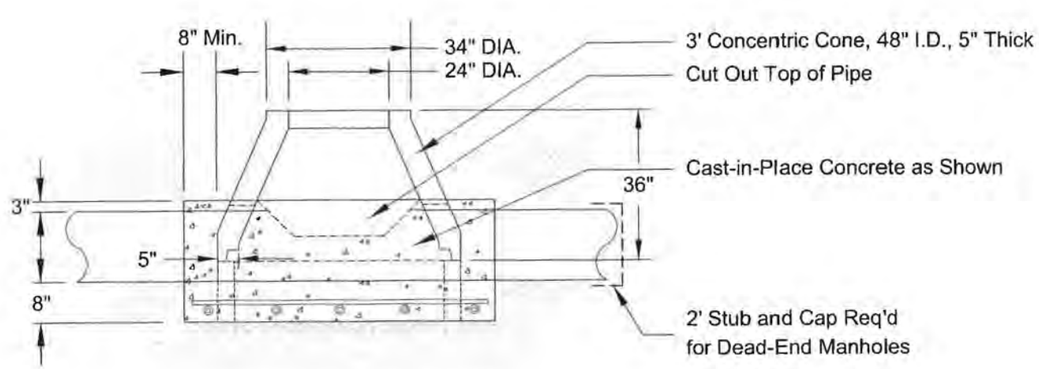

SECTION 2
NTS

NOTES:

1. Manholes shall be constructed watertight- test per Standard Construction Specification.
2. Steps shall not be installed in the manholes.
3. Manholes located in paved areas shall have asphaltic patch four inches (4") thick placed in two lifts to exact line and grade of street. Manhole ring shall be quarter inch (1/4") below finished patch.
4. Manholes located in gravel streets or alleys shall have lid adjusted to two inches (2") below gravel surface.
5. All cast-in-place conc. shall be troweled smooth.
6. Manufactured watertight manhole couplers are required at all pipe penetrations.
7. Contractor shall comply with the most current OSHA requirements for excavations.
8. Seal between riser and cone, riser and riser, and riser and frame with two parallel three-eighths of an inch (3/8") diameter beads of silicone sealant.
9. Backfill around manholes shall be Class 'D' for all roadways and alleys; Class 'A' for all other locations unless specifically allowed or directed otherwise by the City Engineer.
10. City standard manhole ring and cover; a 4.5" traffic rated ring and lid will be allowed with approval from City Engineer.
11. Type D manholes shall comply with the Standard Construction Drawing for Manhole Base Details.

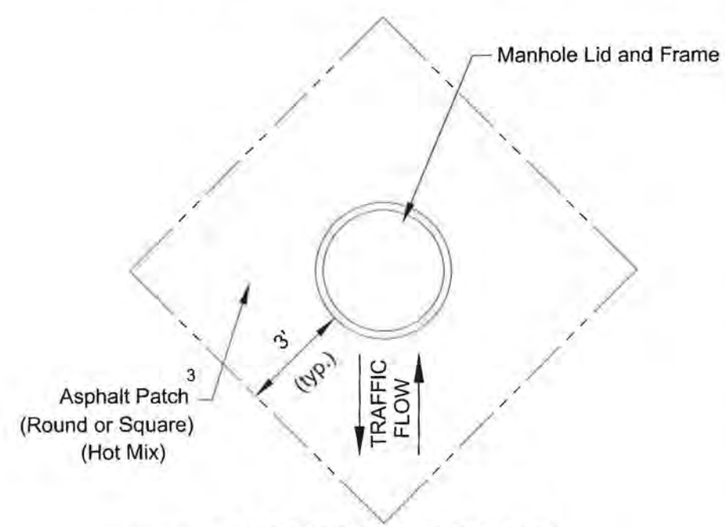

A ASPHALT PATCH DETAIL

REVISIONS	
DATE	DESCRIPTION

SIGNED AND DATED

PROFESSIONAL ENGINEER REGISTERED 8832 5-19-14 STATE OF IDAHO KEVIN LILLY

DRAFTED BY: RHBIII/KWK
CHECKED BY: K.Lilly
DRAWING SCALE: NTS
DATE: 3-3-2014

SHALLOW SANITARY MANHOLE

CITY OF MOSCOW
ENGINEERING DEPARTMENT

DRAWING NUMBER: 23

NOTES:

1. Raised letters are Sharp Face Gothic font; 2.5" for "SANITARY" and "STORM," 1.5" for "CITY OF MOSCOW." Center word about center line.
2. Cast covers of Grey Cast Iron; ASTM A48 Class 138.
3. All covers shall be interchangeable within the dimensions shown. All mating surfaces shall be machine finished to ensure a non-rocking fit The inside vertical recessed face of the ring and the vertical outside edge of the cover shall be machined or manufactured to the fallowing tolerances:
   Ring - +3/32 inch to -3/32 inch
   Cover - +3/32 inch to -3/32 inch
4. Rings (traffic rated) of lesser height may be used in special circumstances, as allowed by the City Engineer.

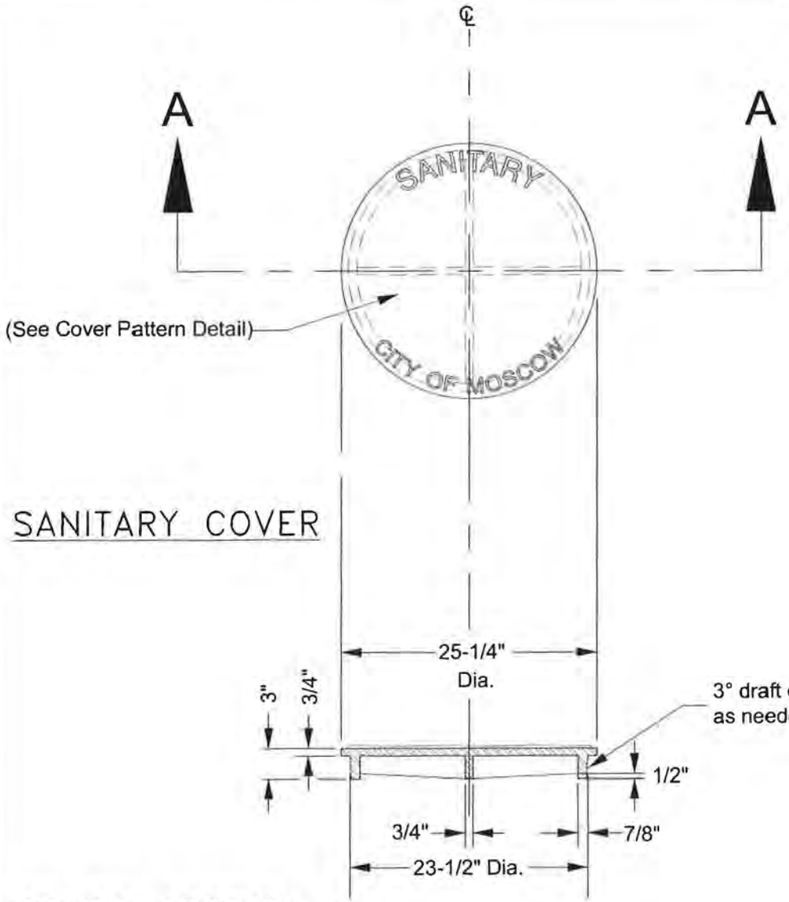

SANITARY COVER

COVER SECTION A–A

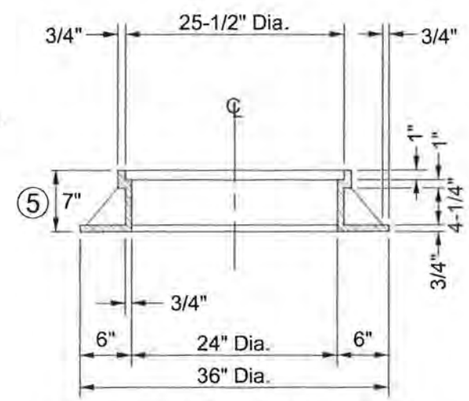

RING SECTION B–B

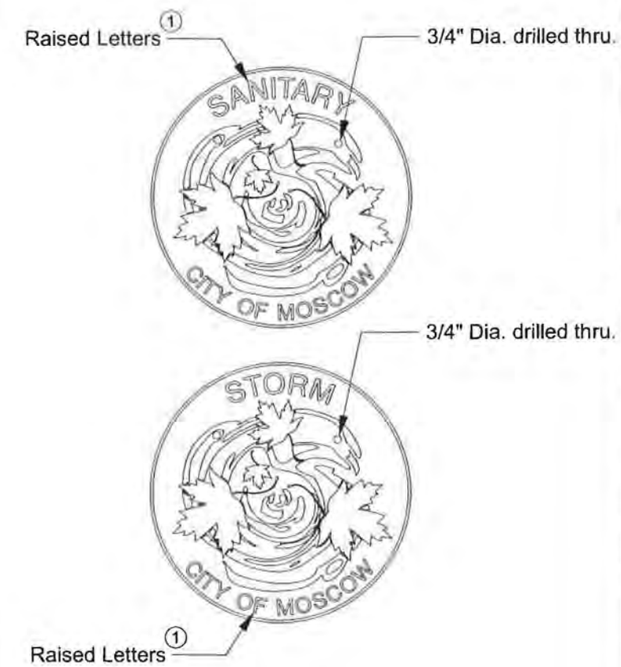

COVER PATTERN DETAILS

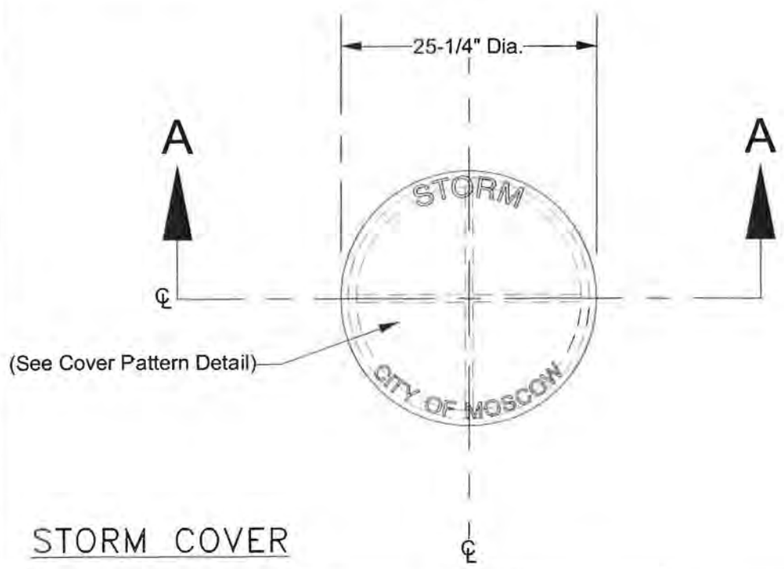

STORM COVER

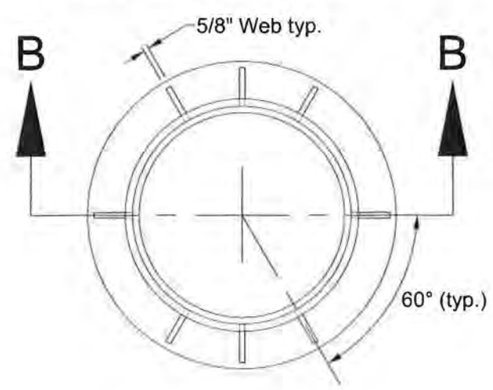

RING

REVISIONS	
DATE	DESCRIPTION

SIGNED AND DATED

PROFESSIONAL ENGINEER REGISTERED 8832 5-19-14 STATE OF IDAHO KEVIN LILLY

DRAFTED BY: CEE/KWK

CHECKED BY: K.Lilly

DRAWING SCALE: NTS

DATE: 3-4-2014

STORM & SANITARY MANHOLE RING & COVER

CITY OF MOSCOW ENGINEERING DEPARTMENT

DRAWING NUMBER: 24

Note:
All channels to be 'U' shaped (See Channel X-Section)

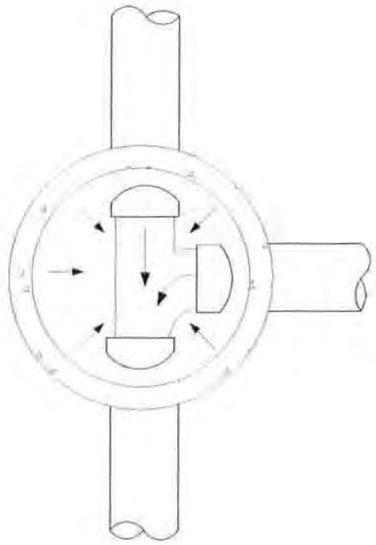

TYPE A

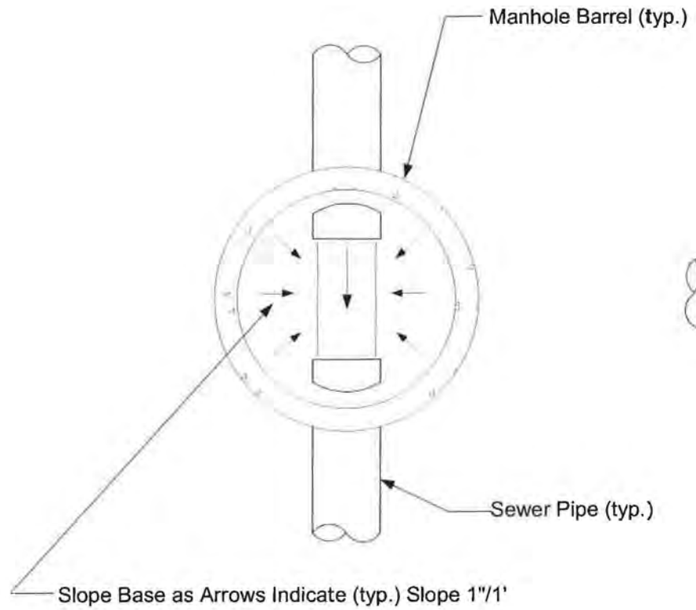

TYPE B

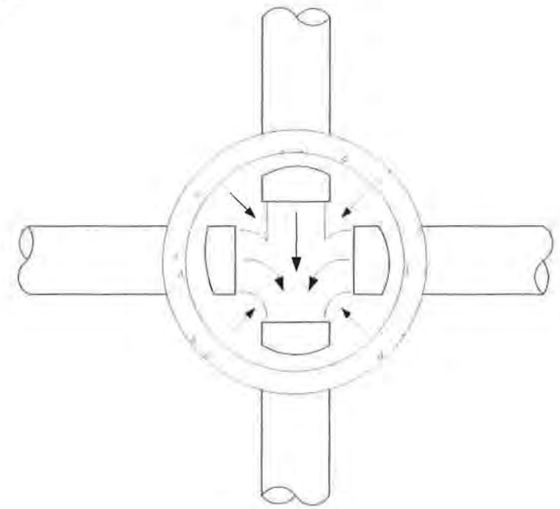

TYPE C

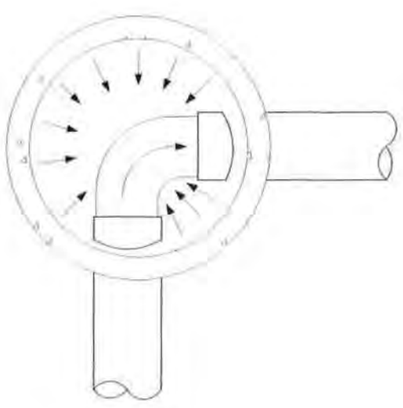

TYPE D

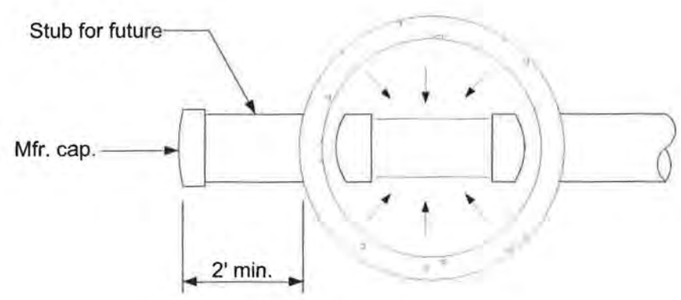

TYPE E
For Dead End Line

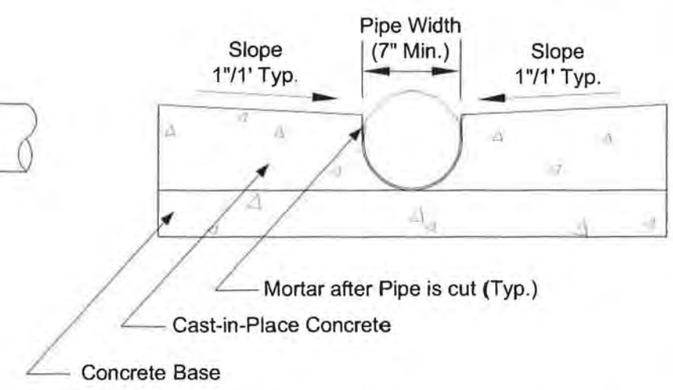

CHANNEL X-SECTION

REVISIONS	
DATE	DESCRIPTION

SIGNED AND DATED

PROFESSIONAL ENGINEER REGISTERED 8832 3-19-14 STATE OF IDAHO KEVIN LILLY

DRAFTED BY: CEE/KWK
CHECKED BY: K.Lilly
DRAWING SCALE: NTS
DATE: 3-4-2014

MANHOLE BASE DETAILS

CITY OF MOSCOW
ENGINEERING DEPARTMENT

DRAWING NUMBER:
25

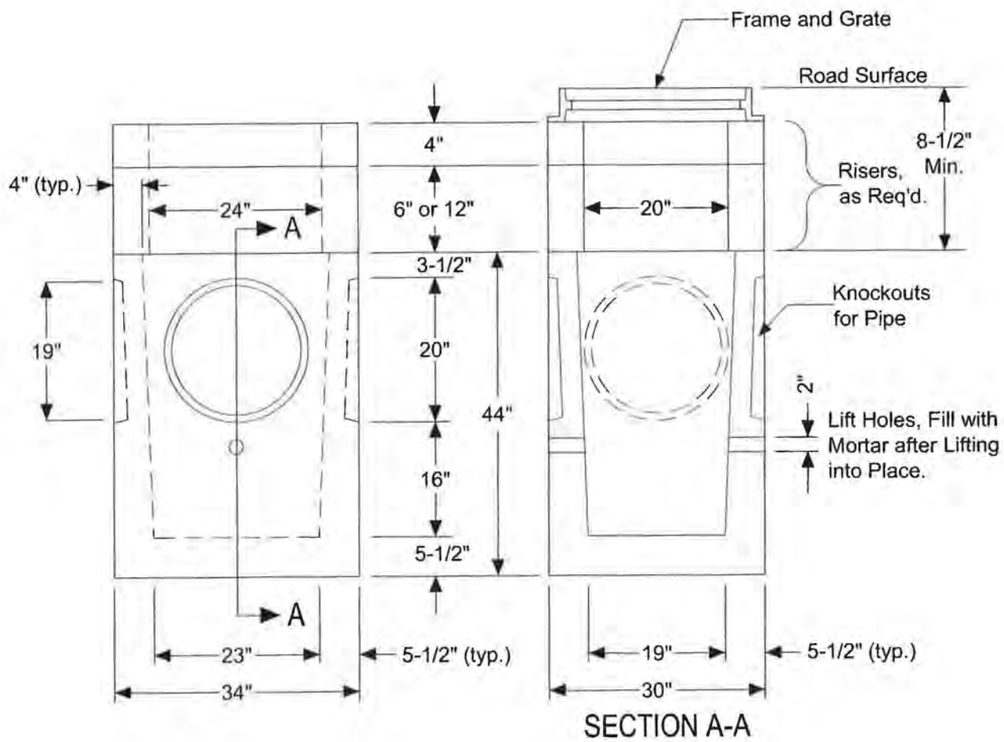

CATCH BASIN

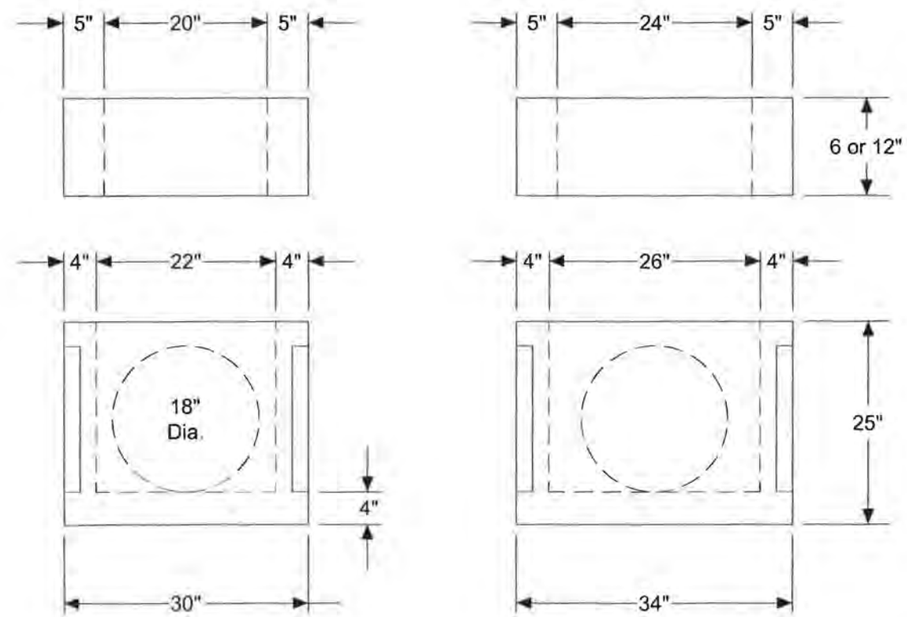

CATCH INLET

NOTES:

1. Catch Basins shall be used in all City streets, City parking lots, and City alleys for catchment and conveyance of surface runoff. Catch Inlets are not to be used in these locations unless specifically allowed by the City Engineer.
2. Catch Basin shall be precast concrete per WSDOT Catch Basin Type 1 and Catch Inlets per WSDOT Concrete Inlet, unless otherwise approved by the City Engineer.
3. Catch Basins located in paved areas shall have asphaltic patch four inches (4") thick (in two lifts) restoring surface to original line and grade. (see note 6)
4. Catch basins located in gravel streets or alleys shall have grate adjusted two inches (2") below gravel surface.
5. All pipes shall protrude 1"-2" into the basin and shall be neatly mortared all around (inside and outside). Exit pipe to manhole or storm main shall have 1'-6" minimum cover.
6. Catch Basins shall be set 0.10 foot lower than adjoining street grade.
7. All materials shall be manufactured in the U.S.A.
8. Catch Basins and Inlets shall be pre-cast concrete conforming to AASHTO M199 or ASTM C478, as shown.
9. Catch Basins and Inlets shall be backfilled to grade as per adjoining pipe trench backfill.
10. Catch Inlets may only be used as a 'bubbler', area drain, or where clearance over some particular obstacle is necessary and if approved by the City Engineer.
11. Frames and Grates shall be as per the Catch Basin & Catch Inlet Gates and/or the Combination Inlet Standard Drawing.

REVISIONS	
DATE	DESCRIPTION

SIGNED AND DATED

PROFESSIONAL ENGINEER REGISTERED 8832 5-19-14 STATE OF IDAHO KEVIN LILLY

DRAFTED BY: MAS/KWK
CHECKED BY: K.Lilly
DRAWING SCALE: NTS
DATE: 3-4-2014

CATCH BASIN & CATCH INLET

CITY OF MOSCOW
ENGINEERING DEPARTMENT

DRAWING NUMBER: 26

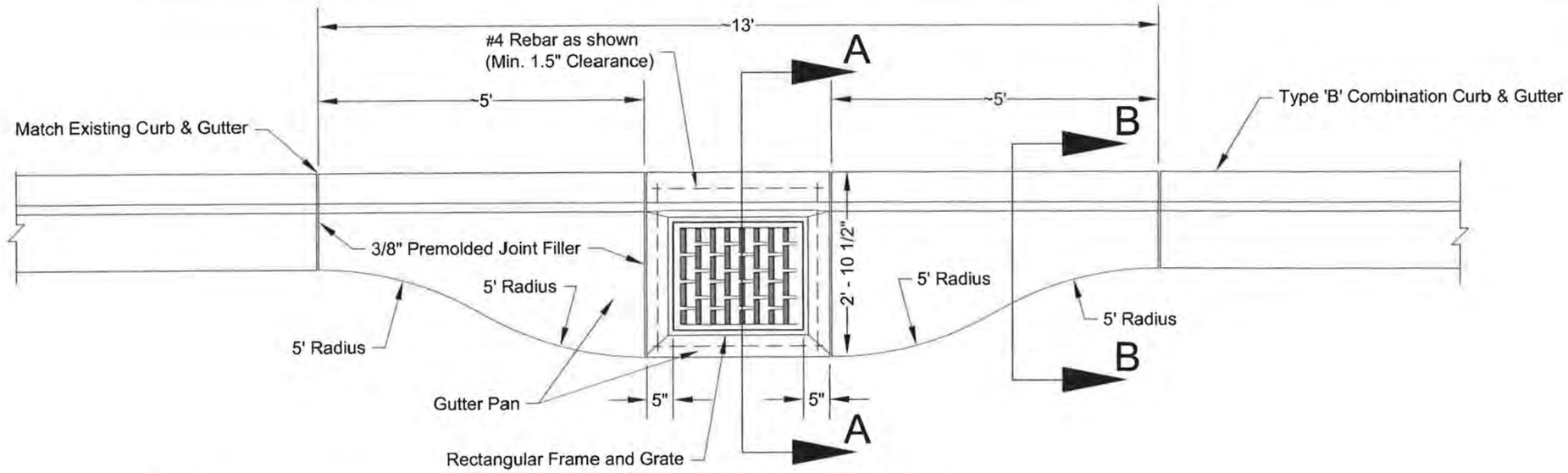

CATCH BASIN GUTTER PAN

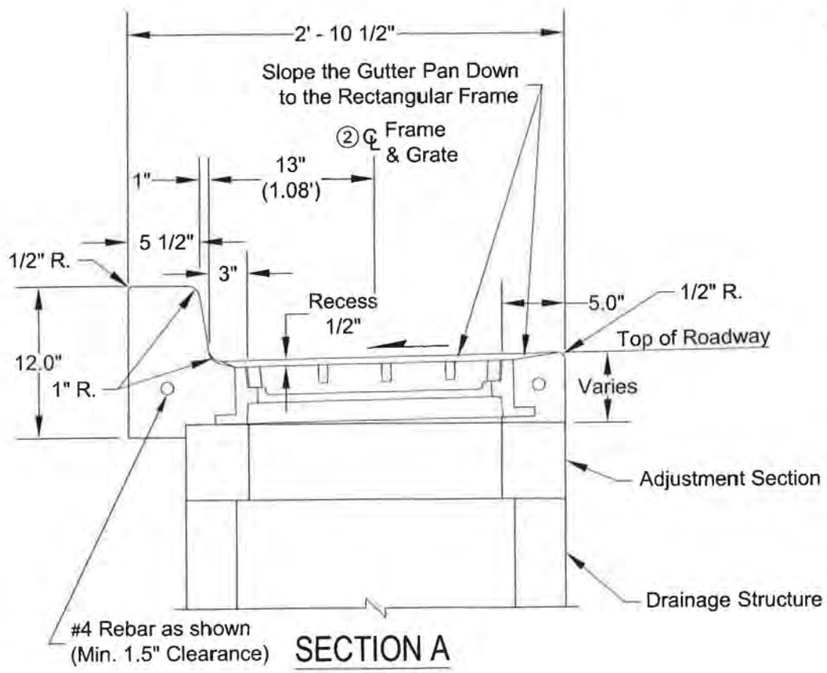

SECTION A

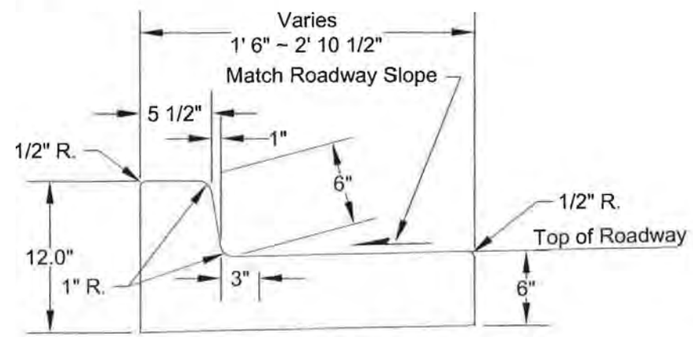

SECTION B

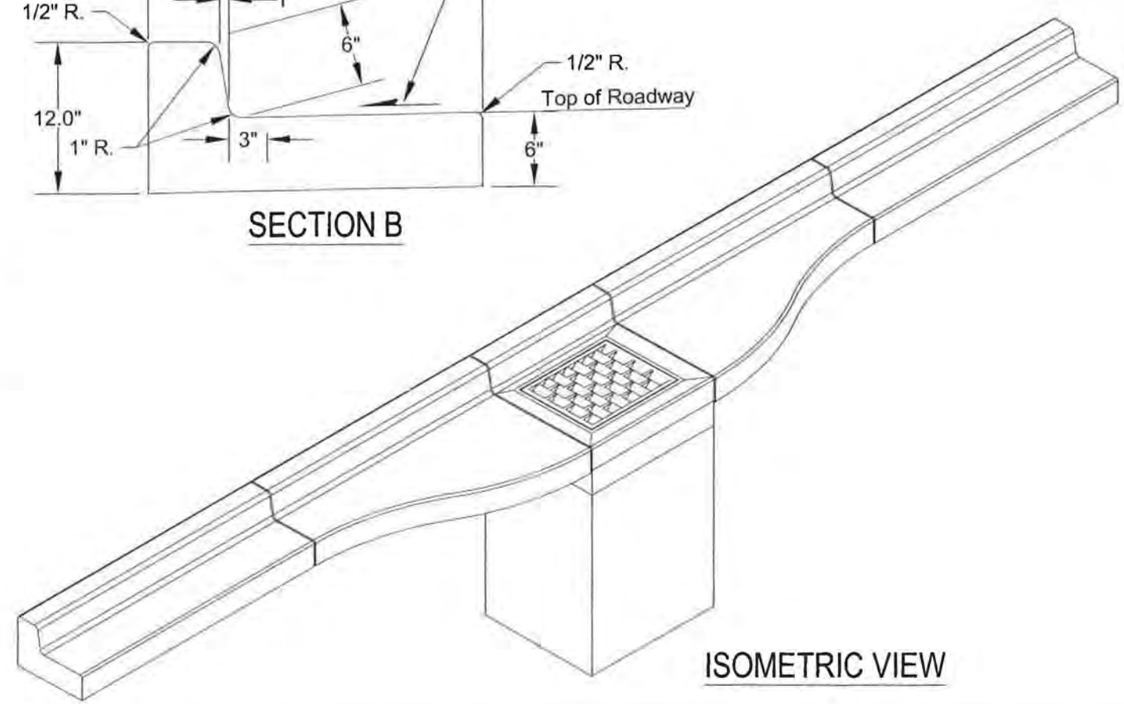

ISOMETRIC VIEW

NOTES:

1. Curb and Gutter Pan design as per WSDOT Cement Concrete Curb And Gutter Pan.
2. The centerline of the drainage structure may differ from the centerline of the frame and grate.
3. The intent of this design is to facilitate the compaction of hot mix asphalt pavement adjacent to a drainage structure.

REVISIONS	
DATE	DESCRIPTION

SIGNED AND DATED

PROFESSIONAL ENGINEER REGISTERED KEVIN LILLY STATE OF IDAHO 8832 5-19-14

DRAFTED BY: C.Edwards
CHECKED BY: K.Lilly
DRAWING SCALE: N.T.S.
DATE: 3-4-2014

CURB & GUTTER PAN

CITY OF MOSCOW
ENGINEERING DEPARTMENT

DRAWING NUMBER:
27a

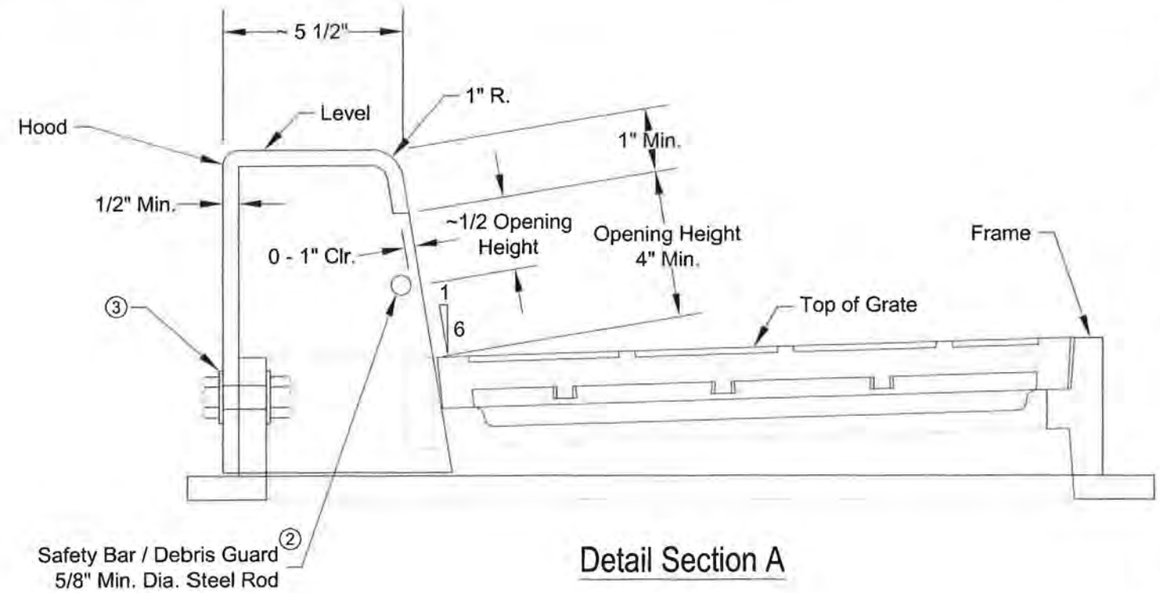

Detail Section A

NOTES:

1. Curb and Gutter Pan design as per WSDOT Combination Inlet.
2. The dimensions of the Frame and Hood may vary slightly among different manufacturers. The Frame may have cast features intended to support a grate guard. Hood units shall mount outside of the Frame. The methods for fastening the Safety Bar / Debris Guard Rod to the Hood may vary. The Hood may include casting lugs. The top of the Hood may be cast with a pattern.
3. Attach the Hood to the frame with two 3/4" × 2" hex head bolts, nuts, and oversize washers. The washers shall have diameters adequate to assure full bearing across the slots.
4. When bolt-down grates are specified, provide two holes in the frame that are vertically aligned with the grate slots. Tap each hole to accept 5/8" × - 11 NC × 2" hex head cap screws. Location of bolt-down holes varies among different manufacturers. See BOLT- DOWN DETAIL, WSDOT Standard Plan B-30.10.
5. This plan is intended to show the installation details of a manufactured product. It is not the intent of this plan to show the specific details necessary to fabricate the castings shown on this drawing.
6. The asymmetry of the Combination Inlet shall be considered when calculating the offset distance for the catch basin. See SECTION A.

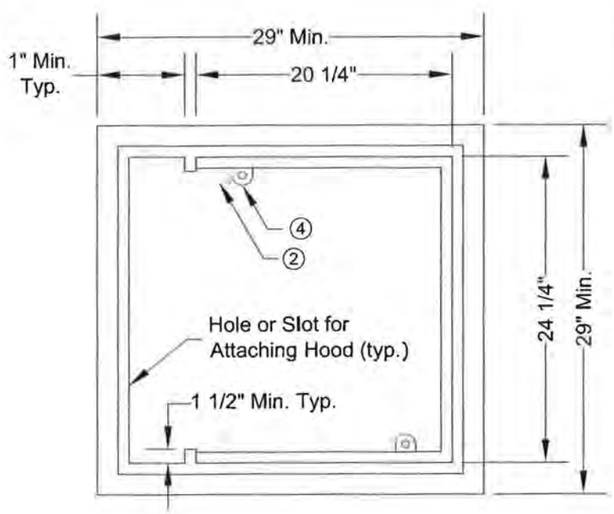

FRAME DETAIL
TOP VIEW

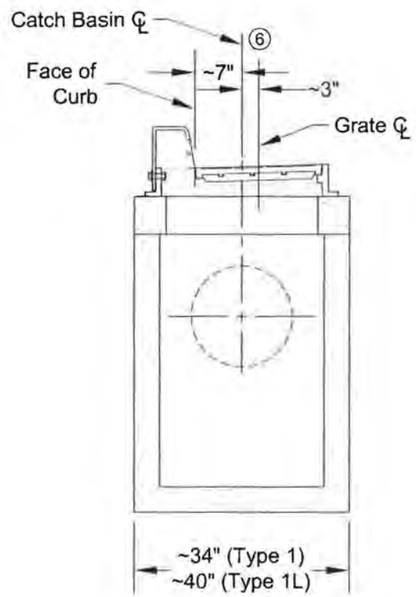

SECTION A

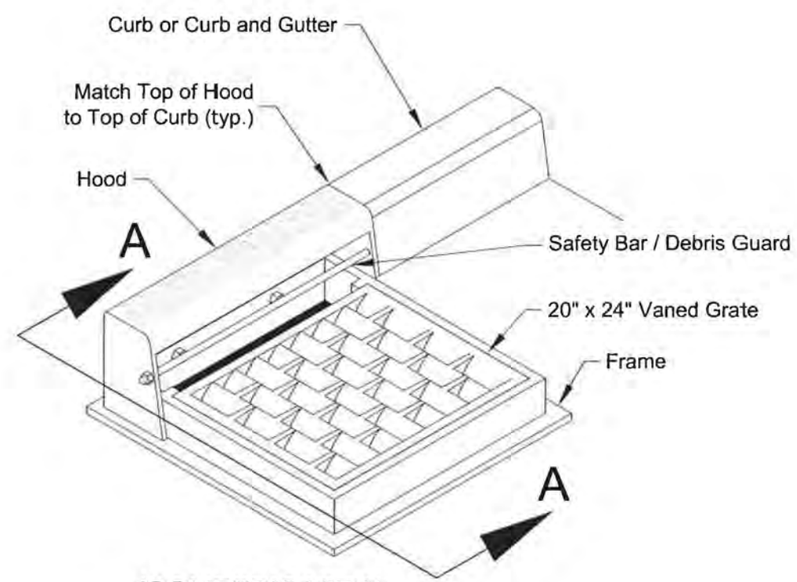

ISOMETRIC VIEW
COMBINATION INLET

REVISIONS	
DATE	DESCRIPTION

SIGNED AND DATED

PROFESSIONAL ENGINEER REGISTERED 8832 5-19-14 STATE OF IDAHO KEVIN LILLY

DRAFTED BY: C.Edwards
CHECKED BY: K.Lilly
DRAWING SCALE: N.T.S.
DATE: 3-4-2014

COMBINATION INLET

CITY OF MOSCOW
ENGINEERING DEPARTMENT

DRAWING NUMBER:
27b

NOTE:
Vanes to be placed towards origin of water flow

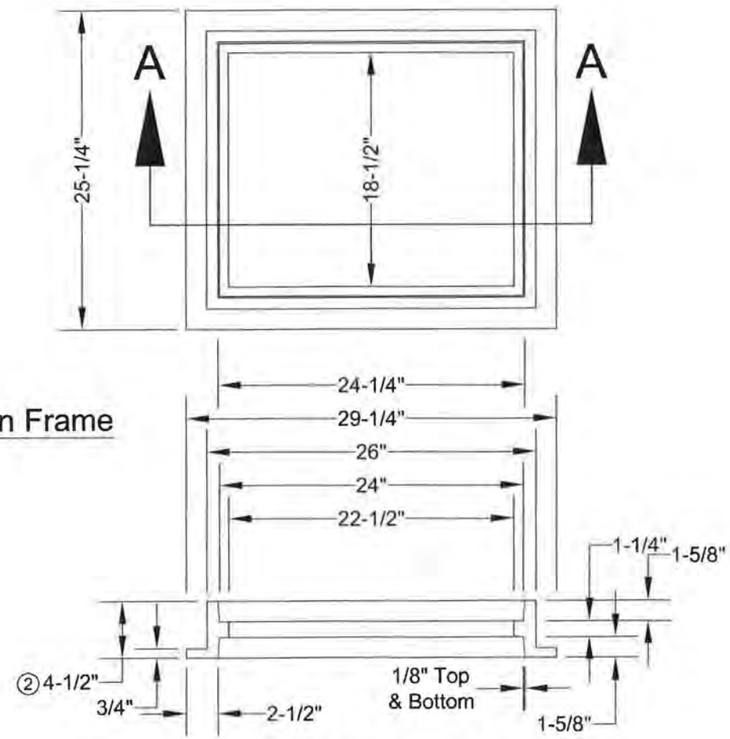

Cast Iron Frame

SECTION A-A

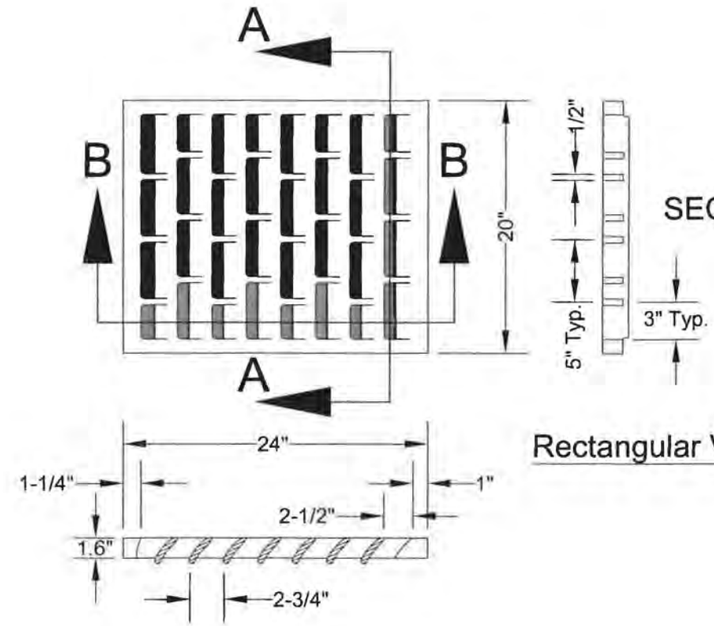

SECTION A-A

Rectangular Vaned Grate

SECTION B-B

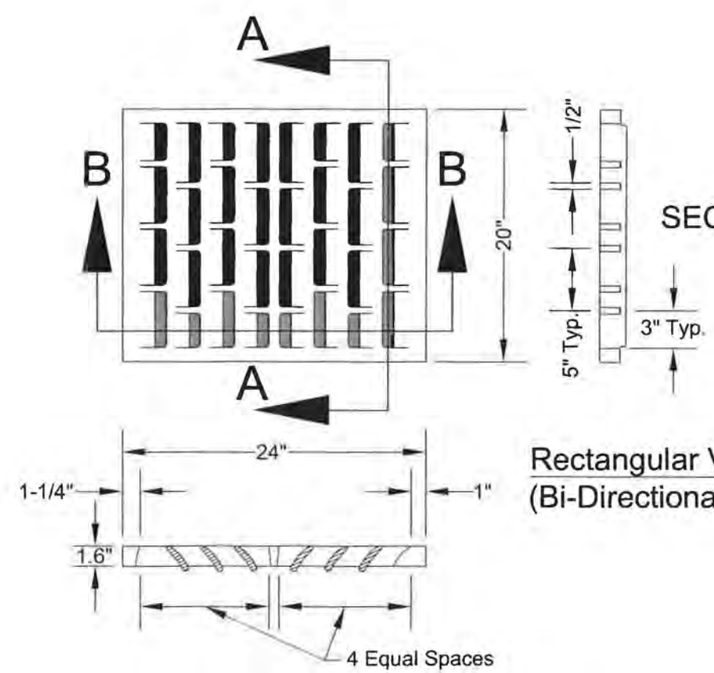

SECTION A-A

Rectangular Vaned Grate
(Bi-Directional)

SECTION B-B

NOTES:

1. Standard Frame and Grate as per WSDOT Rectangular Frame and Rectangular Grate.
2. A 2-1/8" riser is also available.
3. All pipes shall protrude 1"-2" into the inlet and shall be neatly mortared all around (inside and outside). Exit pipe shall have 1.5 foot min. cover.
4. Inlet grates and catch basins in paved areas shall be set one-tenth of a foot (0.10') lower than adjacent ground elevation.
5. All materials shall be manufactured in the U.S.A.
6. Type "A" grate required in all installations unless specifically allowed otherwise by the City Engineer.
7. Catch basins located in unpaved streets, alleys, or landscaped area shall have grate adjusted two inches (2") below gravel surface.
8. All basins, frames, and grates shall be rated for heavy traffic loading.
9. Rectangular solid metal cover may be used at junction points where grate is not necessary.

REVISIONS	
DATE	DESCRIPTION

SIGNED AND DATED

PROFESSIONAL ENGINEER REGISTERED 8832 5-19-14 STATE OF IDAHO KEVIN LILLY

DRAFTED BY: CEE/KWK
CHECKED BY: K.Lilly
DRAWING SCALE: N.T.S.
DATE: 3-4-2014

CATCH BASIN & INLET TYPE 'A' GRATE

CITY OF MOSCOW
ENGINEERING DEPARTMENT

DRAWING NUMBER: 27c

NOTE:
Vanes to be placed towards origin of water flow

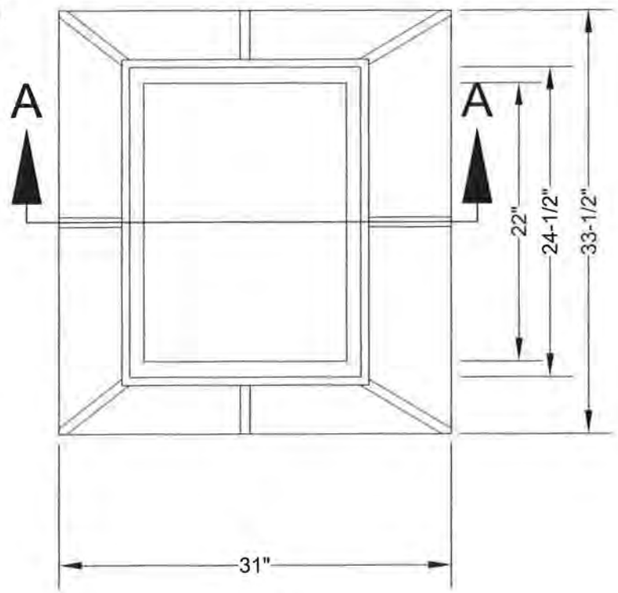

Frame
(Cast Iron)

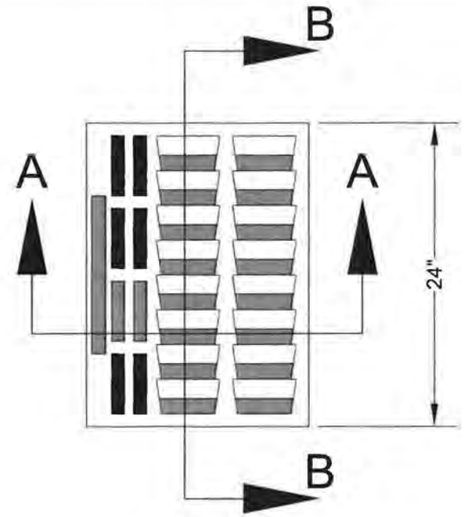

Grate
(Ductile Iron)

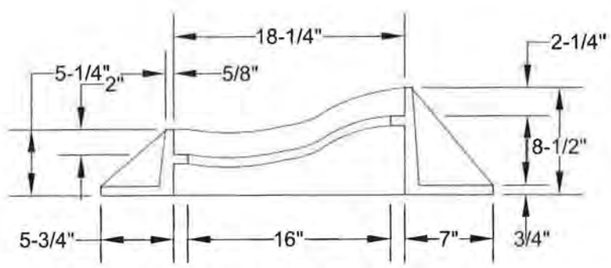

SECTION A-A

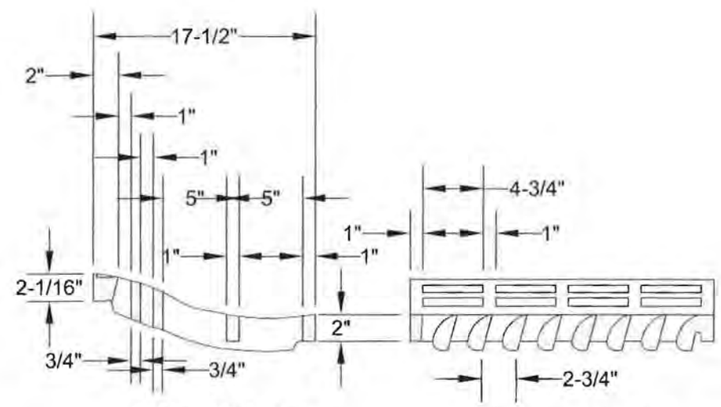

SECTION A-A

SECTION B-B

NOTES:

1. All pipes shall protrude 1"-2" into the inlet and shall be neatly mortared all around (inside and outside). Exit pipe shall have 1.5 foot min. cover.
2. Inlet grates and catch basins in paved areas shall be set one-tenth of a foot (0.10') lower than adjacent ground elevation.
3. All materials shall be manufactured in the U.S.A.
4. Catch basins located in unpaved streets, alleys, or landscaped areas shall have grate adjusted two inches (2") below gravel surface.
5. All basins, frames, and grates shall be rated for heavy traffic loading.

REVISIONS	
DATE	DESCRIPTION

SIGNED AND DATED

PROFESSIONAL ENGINEER REGISTERED 8832 STATE OF IDAHO KEVIN LILLY

DRAFTED BY: MAS/KWK
CHECKED BY: K.Lilly
DRAWING SCALE: N.T.S.
DATE: 2-2-2012

CATCH BASIN & INLET TYPE 'B' GRATE (Rolled Curb)

CITY OF MOSCOW
ENGINEERING DEPARTMENT

DRAWING NUMBER:
27d

Sanitary Sewer House Connection

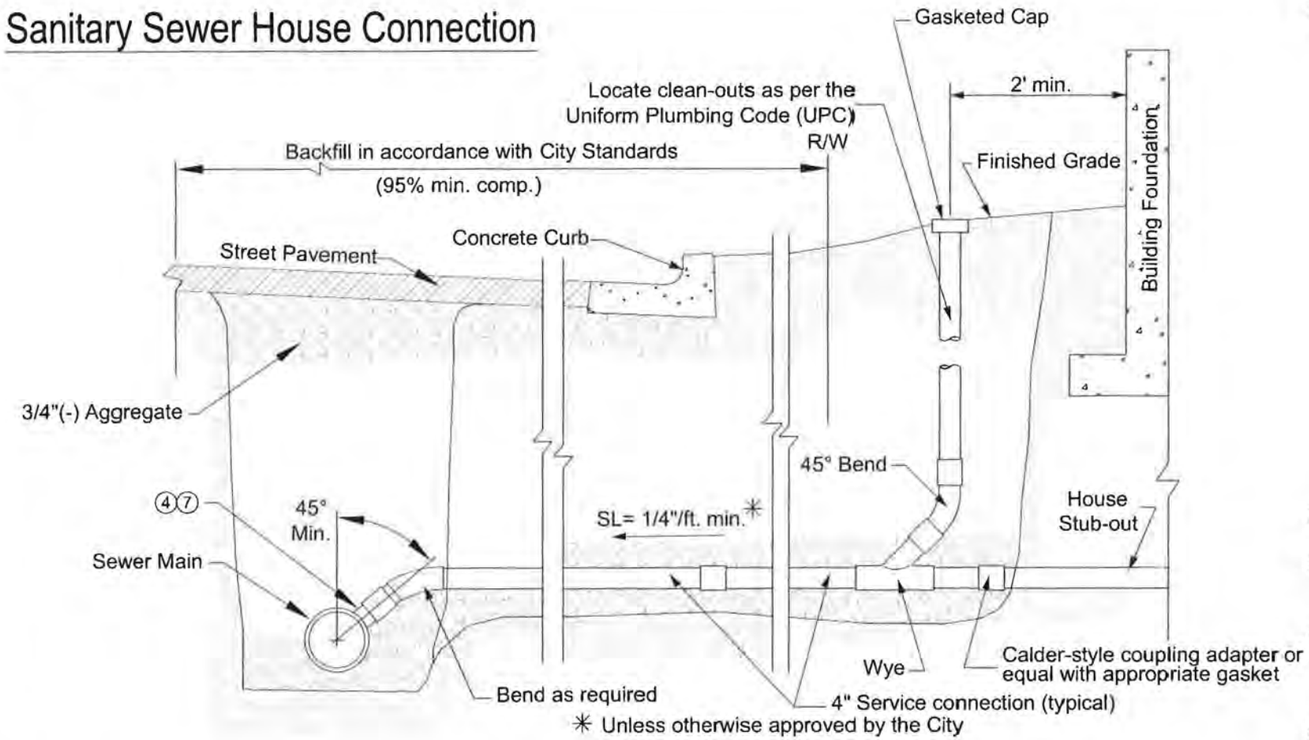

Sanitary & Storm Sewer Service Laterals (Stubs)

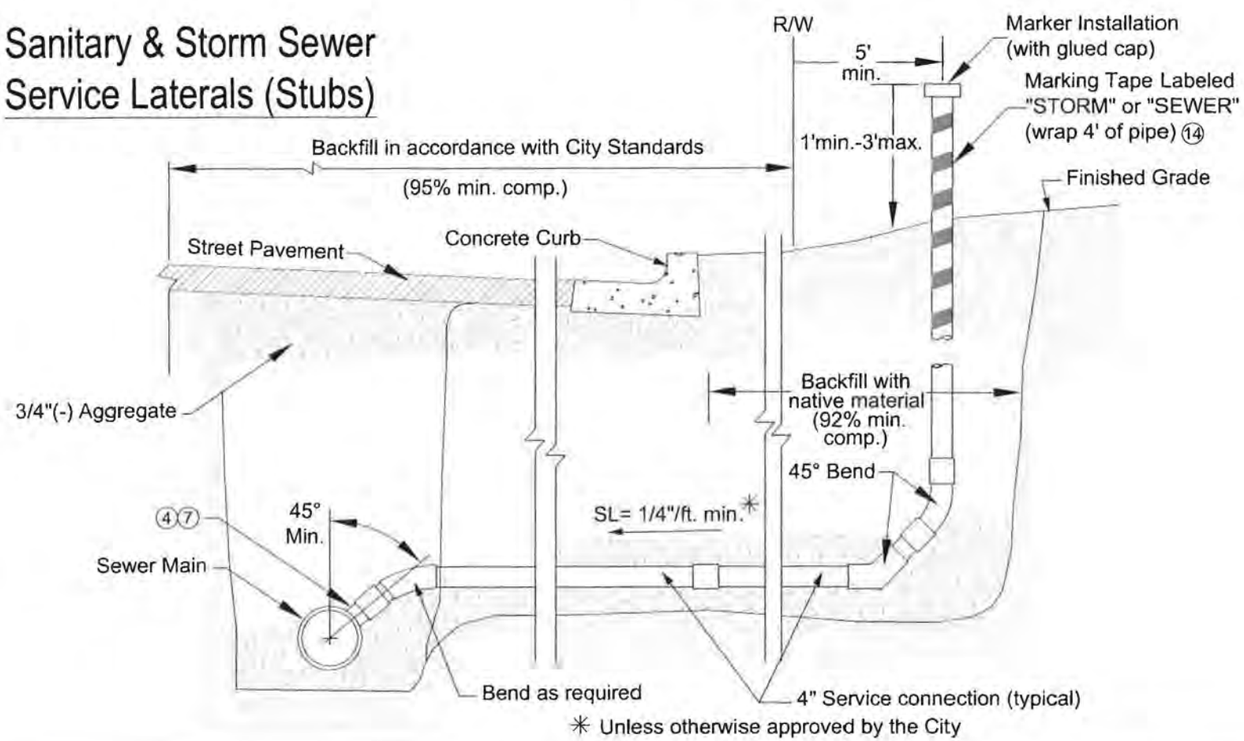

NOTES:

1. Pipe materials shall be as follows:
   a. Within public right-of-way: SDR 35 PVC, (ASTM D-3034), with integral gasketed bell and spigot joints.
   b. From right-of way to within two feet (2') of the house: SDR 35 PVC, (ASTM D-3034), with integral gasketed bell and spigot joints or Schedule 40 ABS plastic pipe with glued fittings.

   If the water service line and sanitary or storm drain service lines from the right-of-way to the house are installed in the same trench, the piping material shall be Schedule 40 ABS with glued fittings unless all three of the following requirements are met:
   a. The bottom of the water pipe, at all joints, shall be at least twelve inches (12") above the top of the sanitary or storm drain service line.
   b. The water pipe shall be placed on a solid shelf, excavated at one side of the common trench, with a minimum clear horizontal distance of at least twelve inches (12") from the sanitary or storm drain service line.
   c. Where the sanitary or storm drain line crosses the water service line, the top of the sanitary or the storm drain line is a minimum of twelve inches (12") below the water service line.
2. Trench bottom to be prepared, as required, for a firm bed.
3. Existing sewer mains shall be tapped by the City, at the Owner's expense.
4. Sewer service laterals shall be connected to the new mains with manufactured wyes. Connection to existing mains require ROMAC 'CB' saddles, or equivalent.
5. Owner to obtain the necessary permits from the Moscow Community Development Department and Public Works Department.
6. This work shall comply with the Uniform Plumbing Code (UPC).
7. Sewer services shall connect to the sanitary sewer main at a point above the centerline of the pipe.
8. Construction to be inspected by the City.
9. Sanitary service laterals (stubs) shall be air tested with the sanitary sewer main.
10. All backfill under sidewalks shall be crushed aggregate. (95% minimum compaction)
11. The service lateral (from main to house) shall be bedded in sand or 3/4"(-) crushed aggregate; from two inches (2") under the pipe to two inches (2") over the pipe.
12. SANITARY service laterals shall be green pipe from the main to the house, including stub outs and markers.
13. STORM service laterals shall be white pipe from the main to the house, including stub outs and markers.
14. Marking tape shall be three inch (3") wide commercially manufactured, and labeled "STORM DRAIN" for storm sewer and "SEWER" for sanitary sewer use.
15. Storm drain and sanitary sewer services (private) located within public street right-of-way or public utility easements shall have a 2.5' minimum burial depth unless specifically allowed otherwise by the City Engineer.

REVISIONS	
DATE	DESCRIPTION

SIGNED AND DATED

PROFESSIONAL ENGINEER REGISTERED 8832 5-19-14 STATE OF IDAHO KEVIN LILLY

DRAFTED BY: KWK
CHECKED BY: K.Lilly
DRAWING SCALE: NTS
DATE: 2-3-2012

SANITARY & STORM SEWER SERVICE CONNECTIONS

CITY OF MOSCOW
ENGINEERING DEPARTMENT

DRAWING NUMBER: 28

✳ Contractor shall insure that corporation stop is turned open before backfilling trench

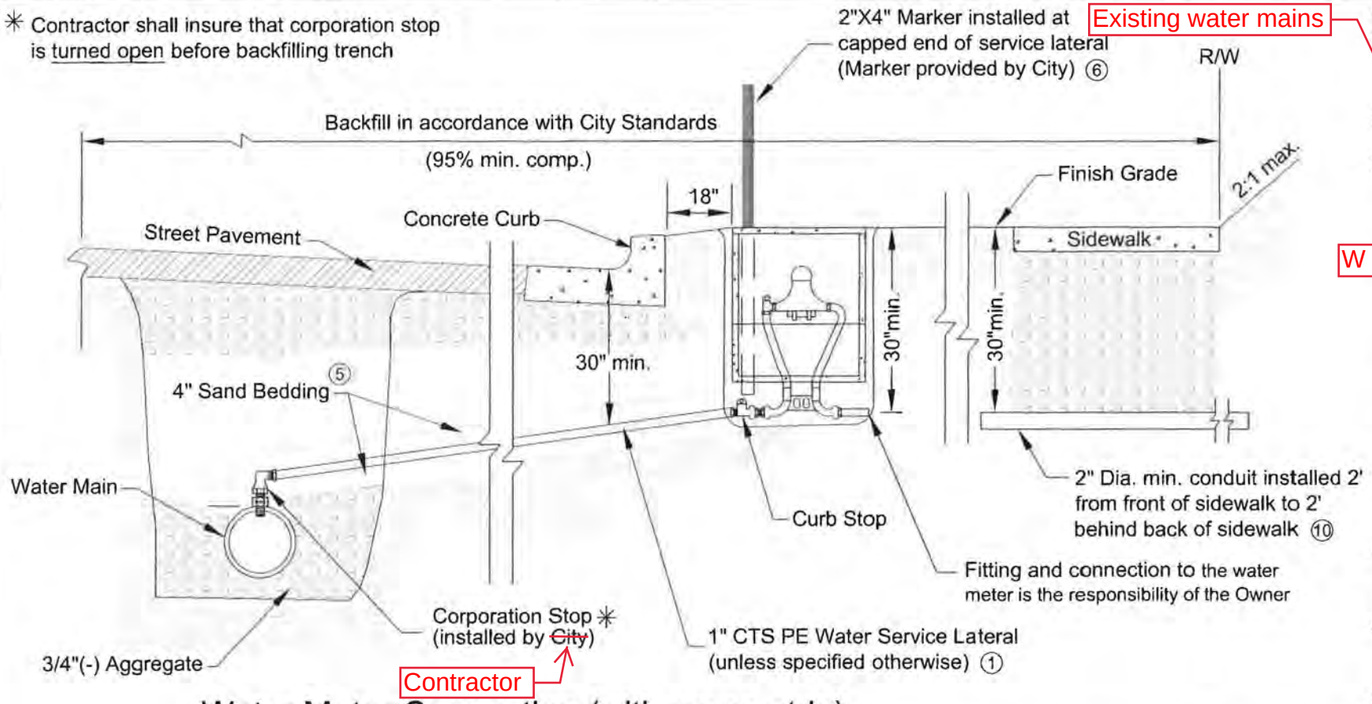

Water Meter Connection (with green strip)

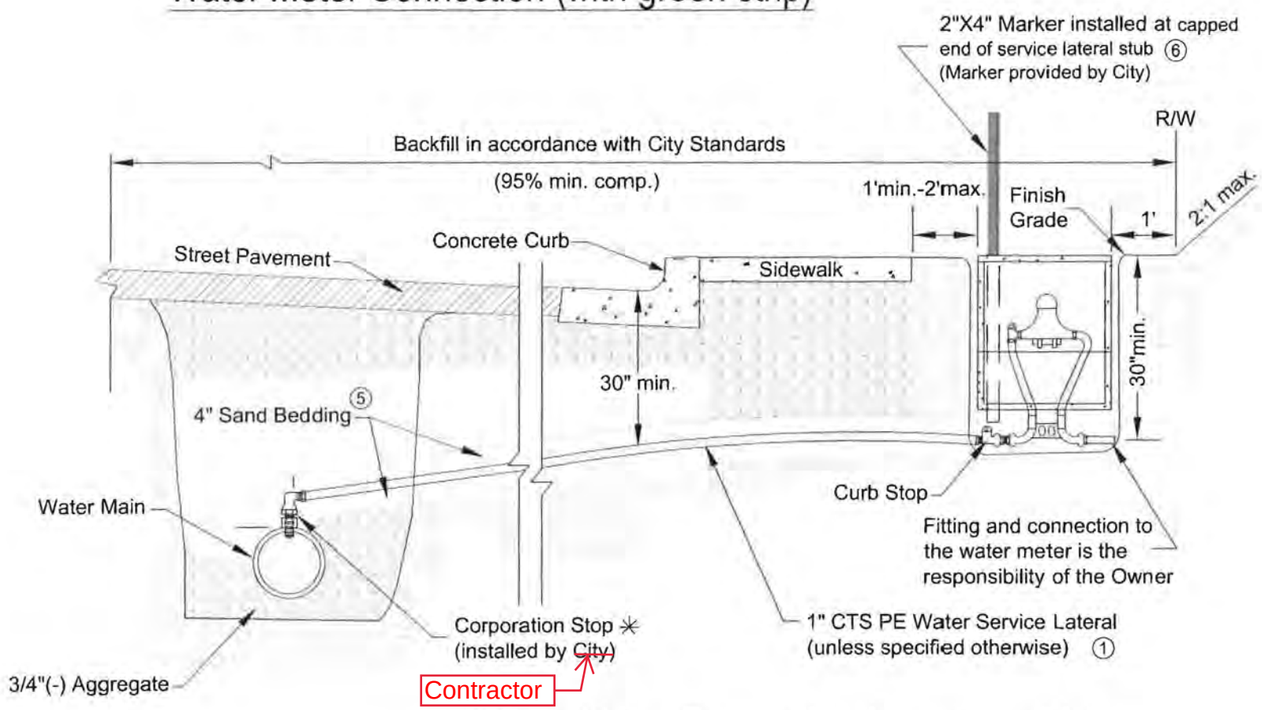

Water Meter Connection (no green strip)

✳ Contractor shall insure that corporation stop is turned open before backfilling trench

NOTES:

1. Pipe and fittings, from the water main to the curb stop, will be supplied by the ~~City.~~ contractor.
2. ~~Water main~~ shall be tapped by the City. shall not be
3. Trench bottom to be prepared, as required, for a firm bed.

   ~~If the~~ water service line and sanitary or storm drain service lines, from the right-of-way to the house, ~~are~~ installed in the same trench, ~~then all three of the following requirements shall be met:~~ W

   ~~a. The bottom of the water pipe, at all joints, shall be at least twelve inches (12") above the top of the sanitary or storm drain service lines.~~

   ~~b. The water pipe shall be placed on a solid shelf, excavated at one side of the common trench, with a minimum clear horizontal distance of at least twelve inches (12") from the sanitary or storm drain service line.~~

   ~~c. Where the sanitary or storm drain line crosses the water service line, the top of the sanitary or the storm drain line is a minimum of twelve inches (12") below the water service line.~~
4. The roadway subgrade shall be established prior to the installation of the water service laterals.
5. The water service lateral shall be bedded in sand or pea gravel from four inches (4") under the pipe to four inches (4") over the pipe.
6. After the installation of the water service lateral, a 2"X4" wooden marker shall be placed at the capped end of the curb stop. The marker will be provided by the City. It shall be the responsibility of the Contractor to install, maintain, and protect the marker.
7. The capped curb stop shall be located eighteen inches (18") beyond the back of curb, if placed in the green strip, and one foot (1') minimum to two feet (2') maximum beyond the back of sidewalk, if sidewalk is installed next to the curb.
8. The capped curb stop shall be buried to a minimum depth of thirty inches (30") from finished grade elevation.
9. The water service lateral and curb stop shall be installed perpendicular to either the curb or the sidewalk.
10. When water meter is located in the green strip, a two inch (2") minimum diameter conduit shall be installed extending two feet (2') from the front of the sidewalk to two feet (2') behind the back of sidewalk.
11. Pipe installation shall be inspected by the City before the trench is backfilled.
12. Owner to obtain the necessary permits from the Moscow Community Development Department and Public Works Department.
13. The Owner's work shall comply with the Uniform Plumbing Code (UPC).
14. All backfill under sidewalks shall be 3/4"(-) crushed aggregate (95% min. compaction).

REVISIONS	
DATE	DESCRIPTION

SIGNED AND DATED

PROFESSIONAL ENGINEER REGISTERED 8832 5-19-14 STATE OF IDAHO KEVIN LILLY

DRAFTED BY: KWK
CHECKED BY: K.Lilly
DRAWING SCALE: NTS
DATE: 3-5-2014

WATER SERVICE CONNECTIONS

CITY OF MOSCOW
ENGINEERING DEPARTMENT

DRAWING NUMBER: 29

FIRE HYDRANT INSTALLATION

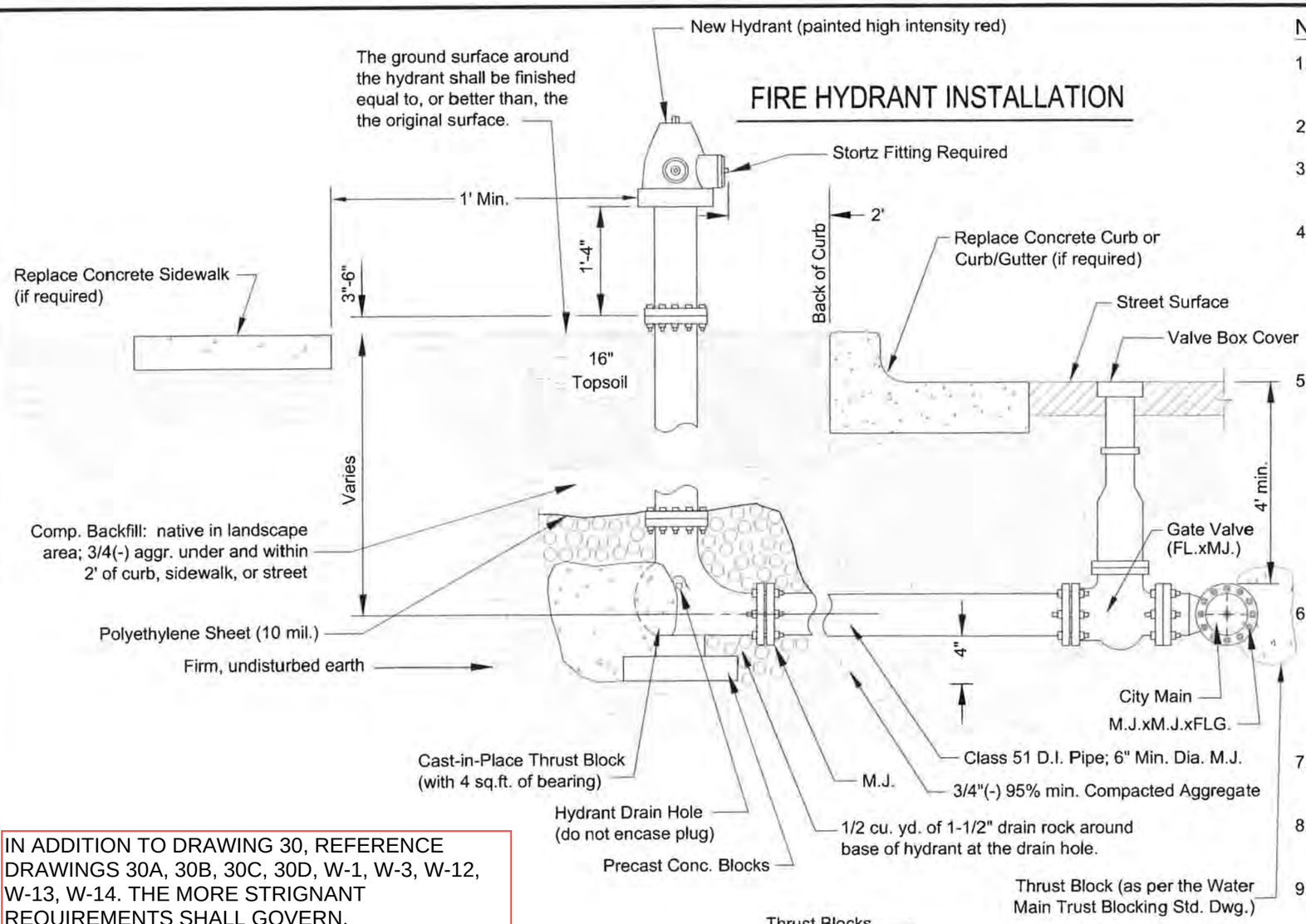

IN ADDITION TO DRAWING 30, REFERENCE DRAWINGS 30A, 30B, 30C, 30D, W-1, W-3, W-12, W-13, W-14. THE MORE STRIGNANT REQUIREMENTS SHALL GOVERN.

NOTES:

1. Thrust blocks shall be cast against undisturbed, firm earth.
2. Hydrants shall be set truly vertical.
3. Materials and installation shall also conform to the City's Standard Specifications.
4. FOR LIVE TAP ONLY: After the Contractor exposes the main, the City will provide the labor and pipe tapping tools for this connection at a set fee to the Contractor. Contractor is responsible for trench backfill and street patch in accordance with City Standards.
5. Where sidewalk is adjacent to or within four feet (4') of the back of curb the hydrant shall be located one foot (1') behind the sidewalk (measured from the face of the hydrant cap to back of sidewalk). Where there is curb but no sidewalk the hydrant shall be located two feet (2') from the back of curb (measured to the face of the hydrant cap). Where there is no sidewalk or curb locate the hydrant as directed by the City Engineer.
6. All fire hydrants and the water lines to the fire hydrants become the City's once installed. Twenty foot (20') wide public utility easements centered on and around the fire hydrant and the waterline to the fire hydrant shall be granted to the City.
7. Furnish and install protective bollards if required by the City Engineer.
8. A three foot (3') radius clear zone required all around fire hydrant, maximum slope of 10%.
9. Fire hydrant to be set to manufacturer elevation and bury specifications.

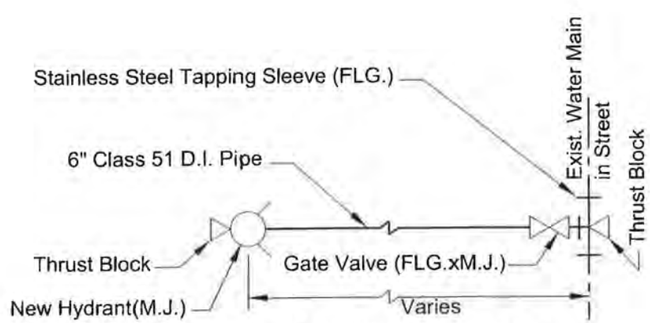

LIVE-TAP HYDRANT DETAIL

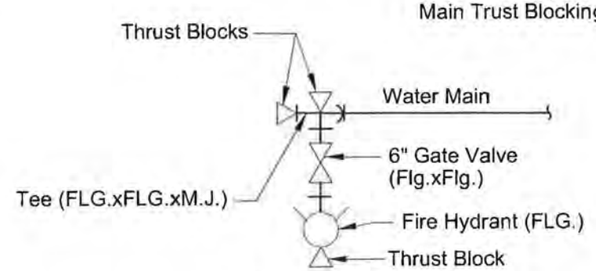

A OPTION 1

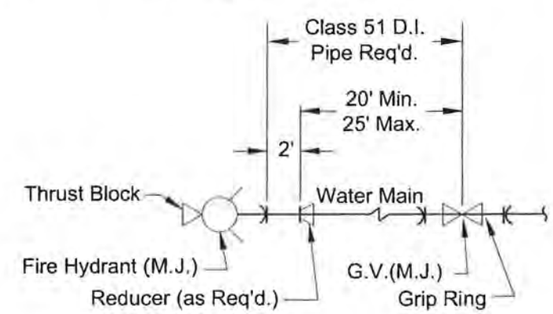

B OPTION 2

DEAD-END FIRE HYDRANT DETAILS

REVISIONS	
DATE	DESCRIPTION

SIGNED AND DATED

PROFESSIONAL ENGINEER REGISTERED 8832 5-19-14 STATE OF IDAHO KEVIN LILLY

DRAFTED BY: CEE/KWK
CHECKED BY: K.Lilly
DRAWING SCALE: NTS
DATE: 3-5--2014

FIRE HYDRANT ASSEMBLY

CITY OF MOSCOW
ENGINEERING DEPARTMENT

DRAWING NUMBER: 30

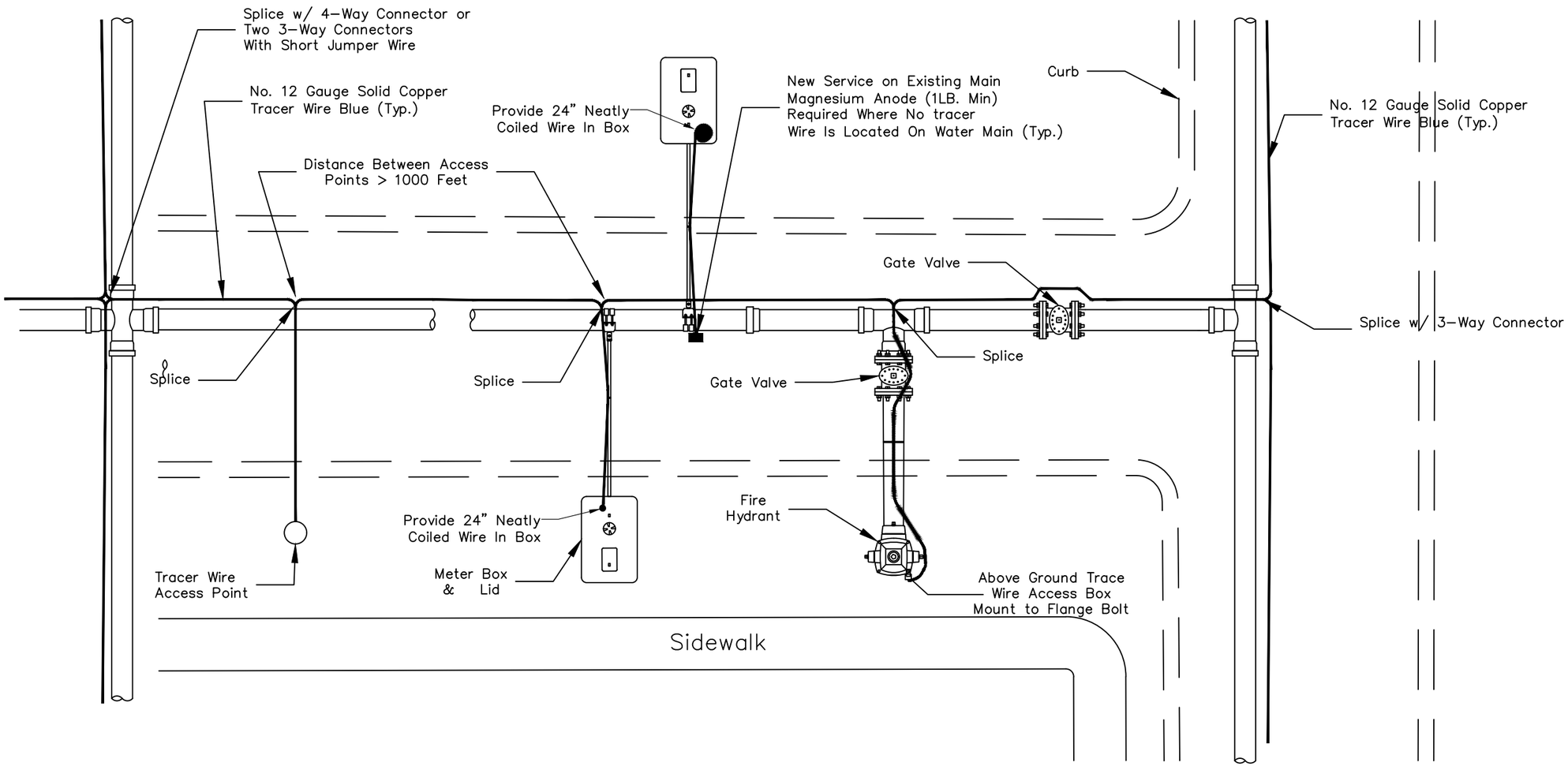

NOTES:

1. Tracer wire shown away from pipe for clarity. Tracer wire shall be installed immediately adjacent to the pipe. Tracer wire shall be fastened to the pipe with zip ties at 6 foot intervals.
2. Tracer wire shall be solid copper No. 12 gauge with blue HDPE insulation.
3. Where intervals between access point is greater than 500 feet, valve box assemblies shall be installed as per standard drawing.
4. Tracer wire shall be tested by the contractor for continuity following burial in the presence of the City. If the tracer wire is found to be not continuous after testing, the contractor shall repair or replace the failed segment of line.
5. The branch connection tracer wire shall be a single tracer wire properly spliced to the main line tracer wire. 3M Direct Bury Splice Kit DBR/Y–6, or approved equal, shall be used to provide electrical continuity.
6. Tracer wire shall be grounded at all dead ends to 1 lb. magnesium anodes.

NOTES:

7. Marking tape not shown for clarity. Include Marking Tape 18"–24" above pipe. Materials per ISPWC Supplemental Section 2050.2.4

DO NOT INSTALL TRACING WIRE IN VALVE BOX ABOVE VALVE. AS DETAILED IN DRAWING 30D INSTALL TRACING WIRE IN SEPARATE VALVE BOX AS A TRACER WIRE ACCESS POINT.

REVISIONS	
DATE	DESCRIPTION

SIGNED AND DATED

DRAFTED BY: ENP
CHECKED BY:
DRAWING SCALE: NTS
DATE: 1-23-2019

LOCATING WIRE WATER SYSTEM PLAN VIEW

CITY OF MOSCOW
ENGINEERING DEPARTMENT

DRAWING NUMBER: 30A

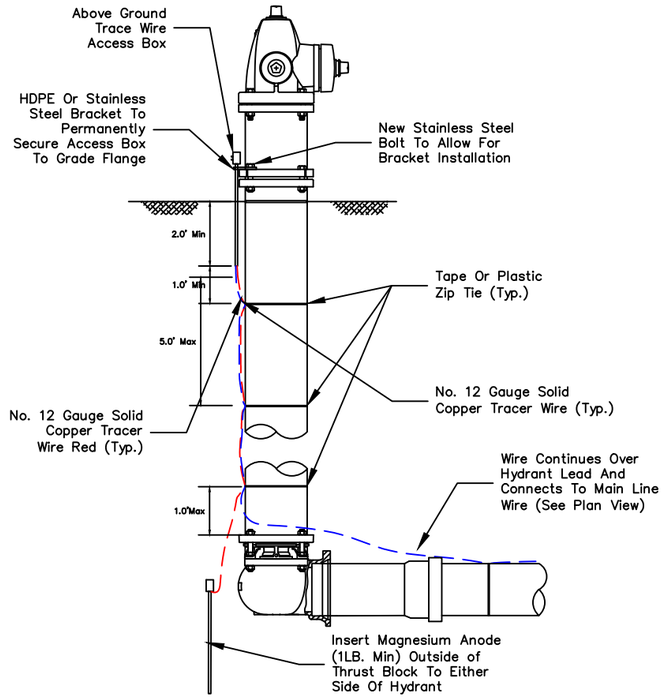

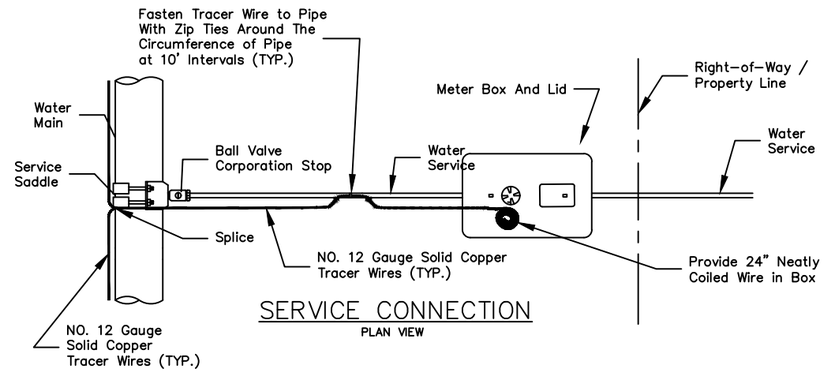

SERVICE CONNECTION
PLAN VIEW

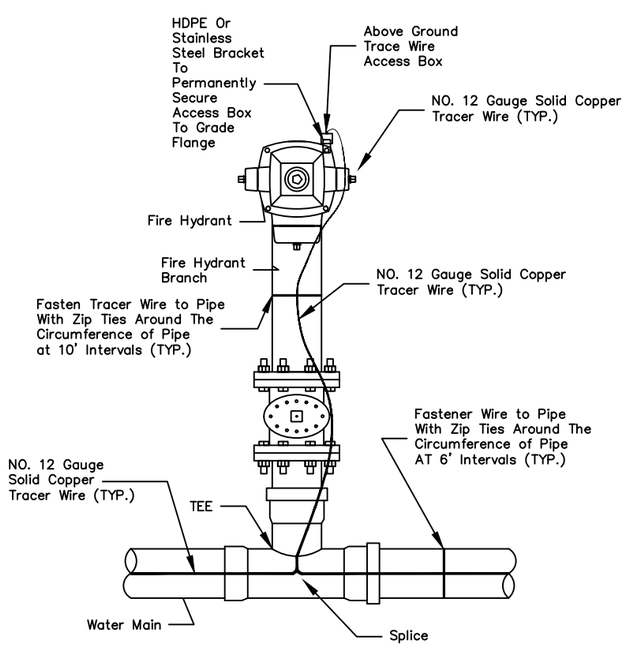

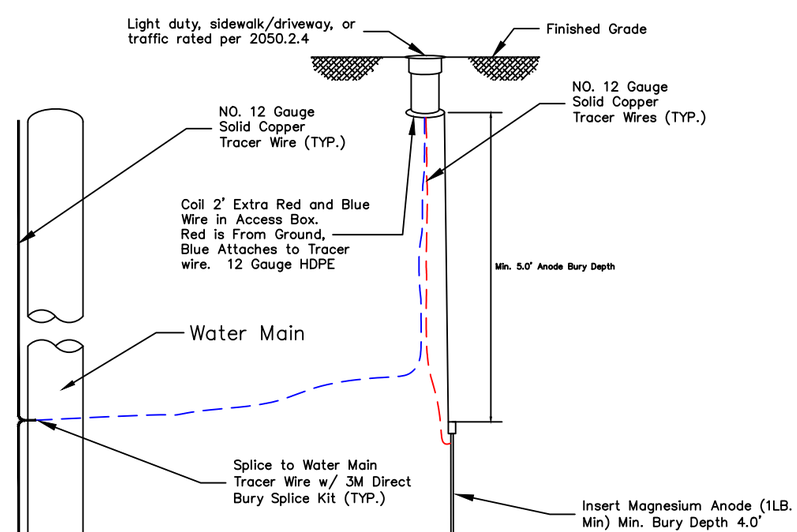

NON-TRAFFIC RATED ACCESS BOX
PLAN VIEW

REVISIONS	
DATE	DESCRIPTION

SIGNED AND DATED

DRAFTED BY: ENP
CHECKED BY:
DRAWING SCALE: NTS
DATE: 1-23-2019

LOCATING WIRE WATER SYSTEM DETAIL

CITY OF MOSCOW
ENGINEERING DEPARTMENT

DRAWING NUMBER: 30B

Typical Wire Plan (Water)

NTS

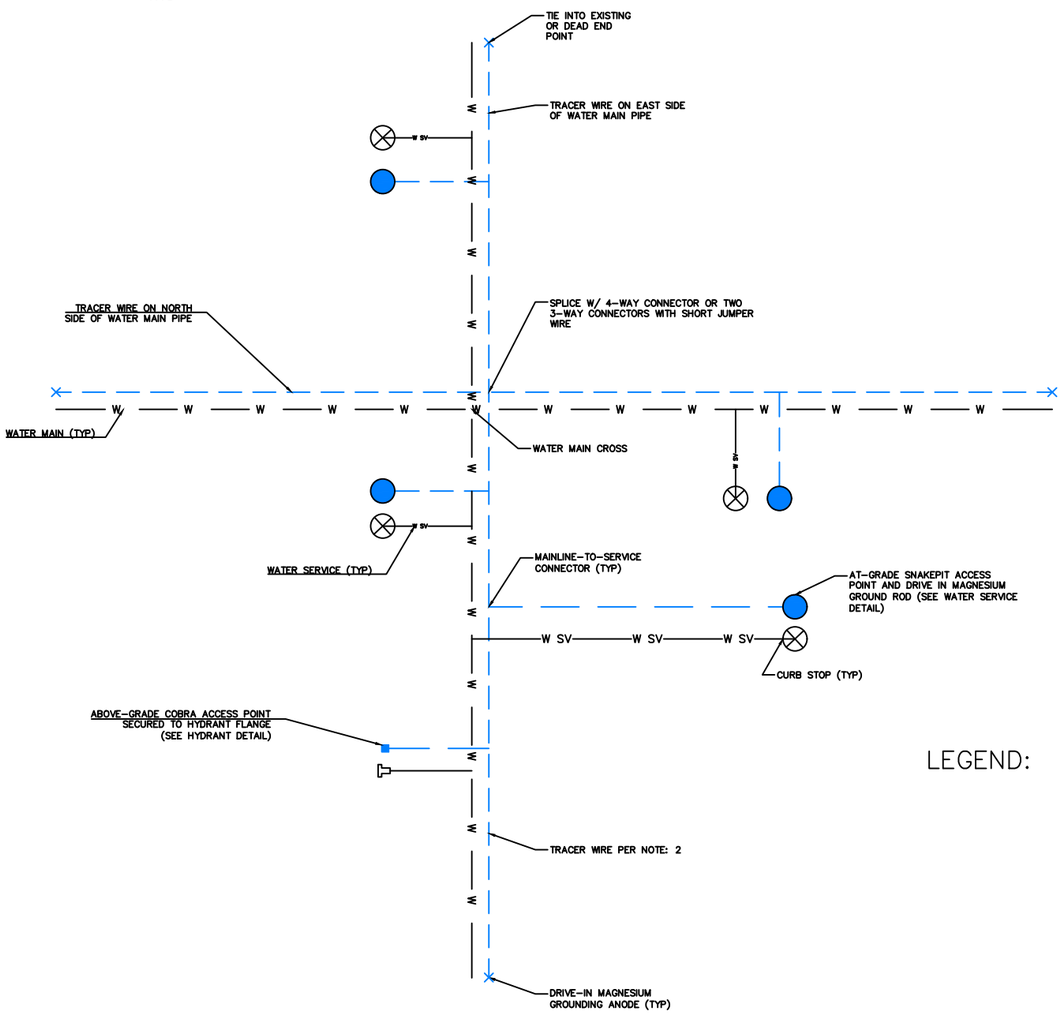

LEGEND:

NOTES:
1. WIRE SHOWN AWAY FROM PIPE FOR CLARITY. WIRE SHALL BE INSTALLED ON THE BOTTOM SIDE OF THE PIPE BELOW THE SPRING LINE. THE WIRE SHALL BE FASTENED TO THE PIPE WITH TAPE OR PLASTIC TIES AT 5' INTERVALS.
2. TRACER WIRE PER ISPWC CITY OF MOSCOW SUPPLEMENTAL, SECTION 2050.2.1. WATER LINES SHALL BE BLUE, SEWER LINES SHALL BE GREEN.
3. MARKING TAPE NOT SHOWN FOR CLARITY. INCLUDE MARKING TAPE 18"-24" ABOVE PIPE. MATERIALS PER ISPWC SUPPLEMENTAL SECTION 2050.2.4.

Typical Wire Plan (Sewer)

NTS

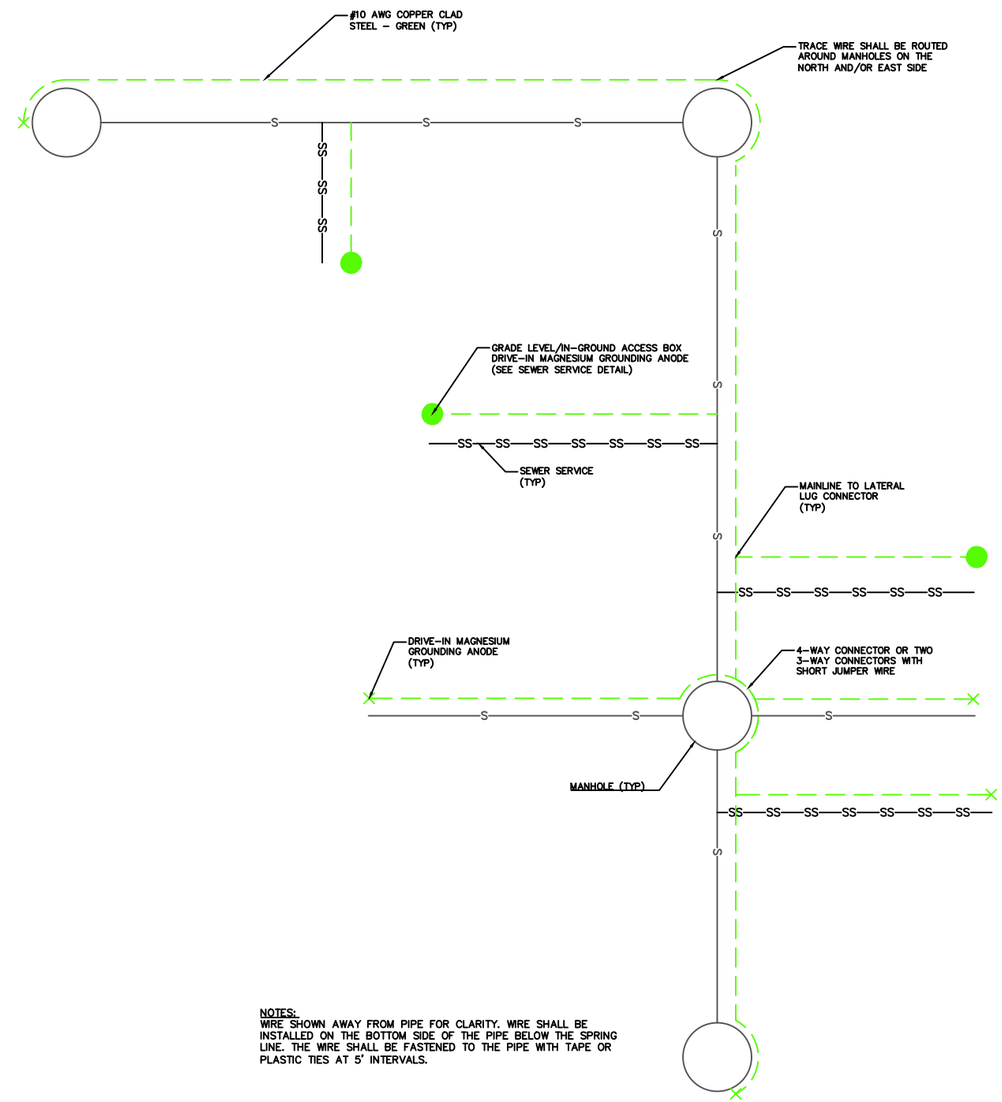

NOTES:
WIRE SHOWN AWAY FROM PIPE FOR CLARITY. WIRE SHALL BE INSTALLED ON THE BOTTOM SIDE OF THE PIPE BELOW THE SPRING LINE. THE WIRE SHALL BE FASTENED TO THE PIPE WITH TAPE OR PLASTIC TIES AT 5' INTERVALS.

REVISIONS	
DATE	DESCRIPTION

SIGNED AND DATED

DRAFTED BY: ENP

CHECKED BY:

DRAWING SCALE: NTS

DATE: 1-23-2019

TYPICAL WATER & SEWER PLAN VIEW

CITY OF MOSCOW
ENGINEERING DEPARTMENT

DRAWING NUMBER: 30C

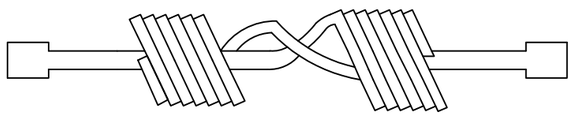

SPLICE DETAIL
NTS

LEGEND

1. 18" x 18" X 6" CONCRETE PAD
2. RICH SERIES 921 OR 926 VALVE BOX AND COVER OR APPROVED SUBSTITUTION.
3. NO. 10 AWG. INSULATED COPPER LOCATING WIRE WITH $\frac{4}{64}$" PVC INSULATION.
4. MARKING TAPE 18"–24" ABOVE MAIN SEWER.

NOTES:

A. WIRE TO BE CONTINUOUS BETWEEN LOCATING WIRE BOXES EXCEPT AS NOTED.

B. PLACE LOCATING WIRE ON TOP OF THE SEWER MAIN AND TAPED WITH ELECTRICAL TAPE, 10' ON CENTER, (MAX).

C. CONTRACTOR SHALL CONDUCT A CONDUCTIVITY TEST ON ALL LOCATING WIRE SPLICES.

D. LOCATE BOXES AT 1000' INTERVALS UNLESS OTHERWISE INDICATED ON THE CONTRACT DOCUMENTS

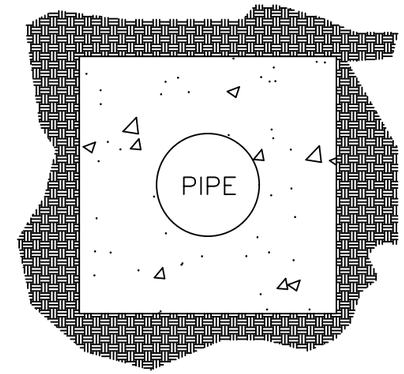

TOP VIEW
NTS

TYLER 6855 HD SERIES CAST IRON VALVE BOX

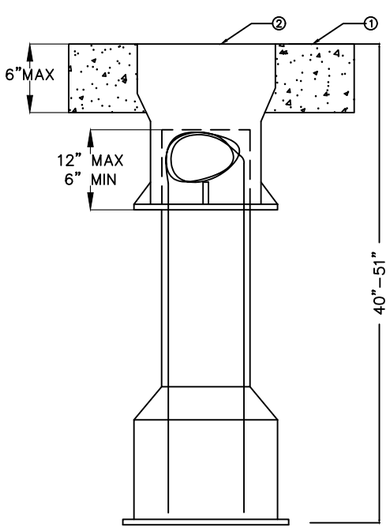

BOX COMPLETE

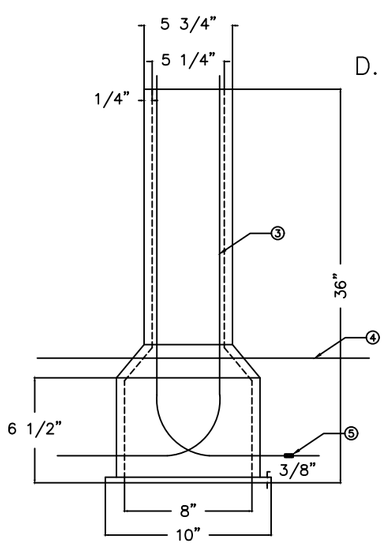

BOTTOM

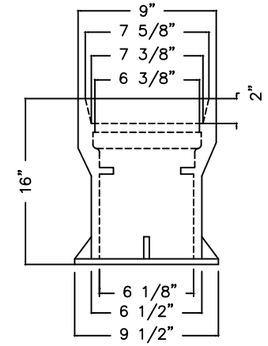

TOP

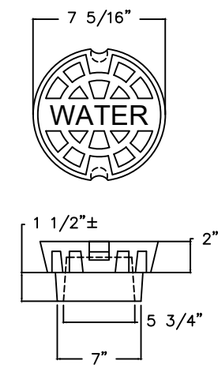

5 1/4" DROP LID

BOX COMPLETE EXTENSION. IN INCHES	WEIGHT	TOP SECTION W/LID LENGTH	WEIGHT	BOTTOM LENGTH	WT.
40"–51"	90 LB.	16"	45 LB.	36"	45 LB.

Tyler Cast Iron Valve Box Series 6855 HD with heavy lid or approved equal
Accommodates 4" Through 12" Valves, 5 1/4" Shafts, Slip–Type

REVISIONS	
DATE	DESCRIPTION

SIGNED AND DATED

DRAFTED BY: ENP
CHECKED BY:
DRAWING SCALE: NTS
DATE: 1-23-2019

Traffic Rated Tracer Wire Access Point Box

CITY OF MOSCOW
ENGINEERING DEPARTMENT

DRAWING NUMBER: 30D

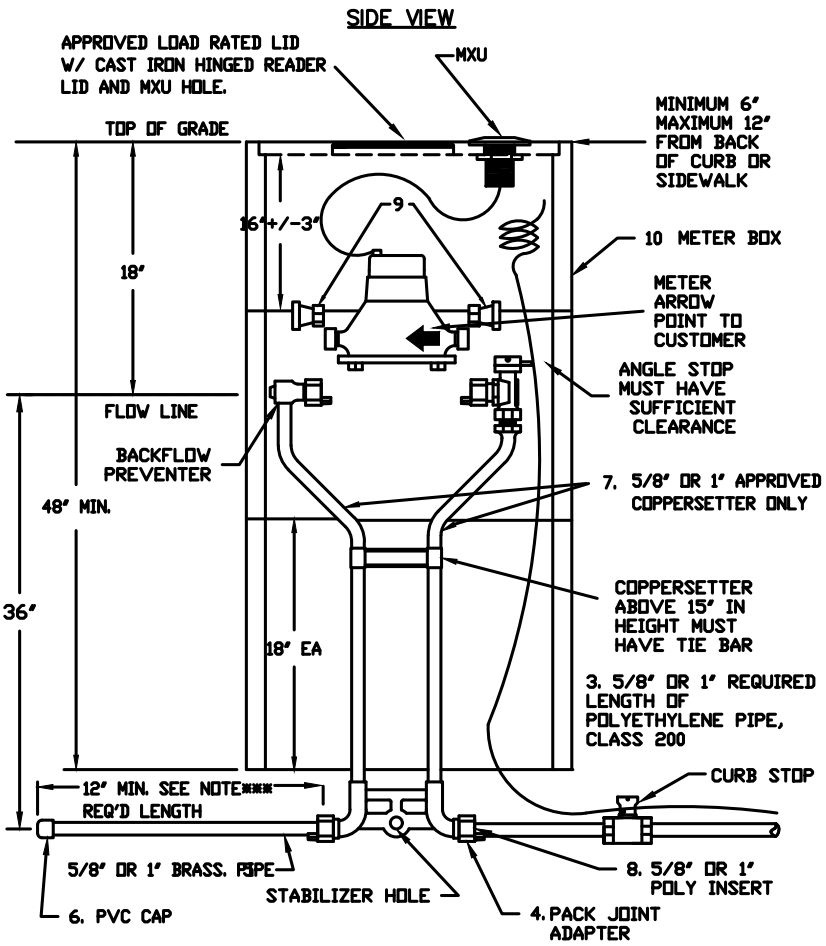

APPROVED TAPPING METHOD AND PARTS

APPROVED TAPPING METHOD

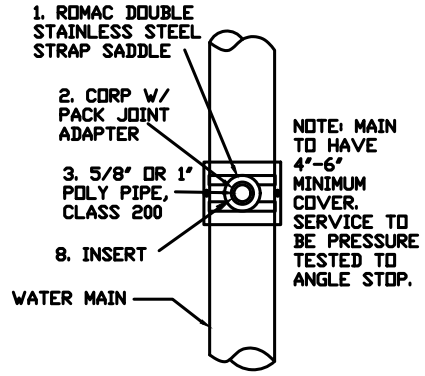

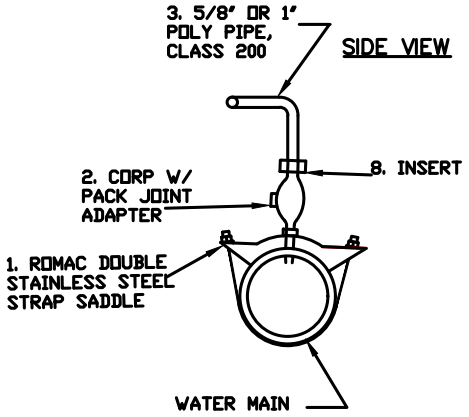

ITEM NO.	NO. REQ'D.	DESCRIPTION
1	1	1" ROMAC DOUBLE STRAP SERVICE SADDLE
2	1	IPS x 1" POLY PACK JOINT BRONZE CORPORATION STOP.
3	1	1" x REQ. LENGTH – USE PIPE SIZE, 200 PSI POLYETHLENE SERVICE LINE
4	1	1" IPS x 1" POLY BRASS PACK JOINT ADAPTER
5	1	1" X MIN 12" LONG BRASS OR POLY PIPE AS APPROVED BY CITY ENGINEER – BRASS PIPE BACK SIDE
6	1	1" PVC CAP.
7	1	1" APPROVED NSF 61 COMPLIANT COPPERSETTER, ALL COMPONENTS
8	2	1" POLY INSERTS WHERE NEEDED
9	2	#24 ADAPTERS
10	3	ARMORCAST 17X30 RPM OR HUBBEL/QUASITE 1130 BOX W/ RADIO READ LID AND HINGED CAST IRON READER LID. BOX WILL CONSIST OF 18" BOTTOM AND MIDDLE SECTIONS, 12" TOP SECTION.

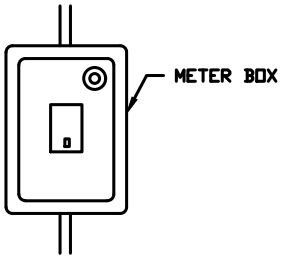

PLAN VIEW

NOTE: ALL MATERIALS USED IN CONTACT WITH POTABLE WATER ARE TO BE NSF-61 COMPLIANT.

NOTE: STABILIZER BAR MUST BE USED FOR SETTINGS HAVING POLYPIPE ON BOTH FRONT AND BACK SIDES.

** NOTE: NO PRIVATE CONNECTIONS OR FITTINGS ALLOWED INSIDE THE METER BOX.**

NOTE: POLY OR BRASS PIPE MUST EXTEND TO THE BACK OF WALK IF METER IS WITHIN GREEN STRIP. OTHERWISE PIPE MUST EXTEND TO CITY OWNED SIDE OF SIDEWALK AS A MINIMUM UNLESS SPECIFIED BY ENGINEER.

REVISION	APPROVED	DATE

CITY OF MOSCOW STANDARD DRAWING

5/8" & 1" COPPERSETTER STANDARD PIT SETTINGS

APPROVED BY:

CITY ENGINEER, PE 7432 DATE:

DWG NO. W-1

NOTE: CURRENT ACCEPTED FIRE HYDRANTS(ONLY)

A. WATEROUS PACER (WITH 24" UPPER STANDPIPE)
B. MUELLER CENTURION
C. ALL FIRE HDYRANTS SHALL BE PRESSURE TESTED, DISINFECTED, FLUSHED AND SAMPLED PRIOR TO PLACING IN SERVICE.
D. FIRE HYDRANT MUST BE LEVEL AND PLUMB.
E. CORRECT BURY DEPTH SHALL BE USED FOR NEW INSTALLATIONS. ALL EXTENSIONS TO HAVE PRIOR APPROVAL OF CITY WATER DEPT,
F. TRACER WIRE TO BE A MAXIMUM OF 2' ABOVE FINAL GRADE AND SHALL NOT BE TIED TO HYDRANT AT FINSH OF PROJECT.

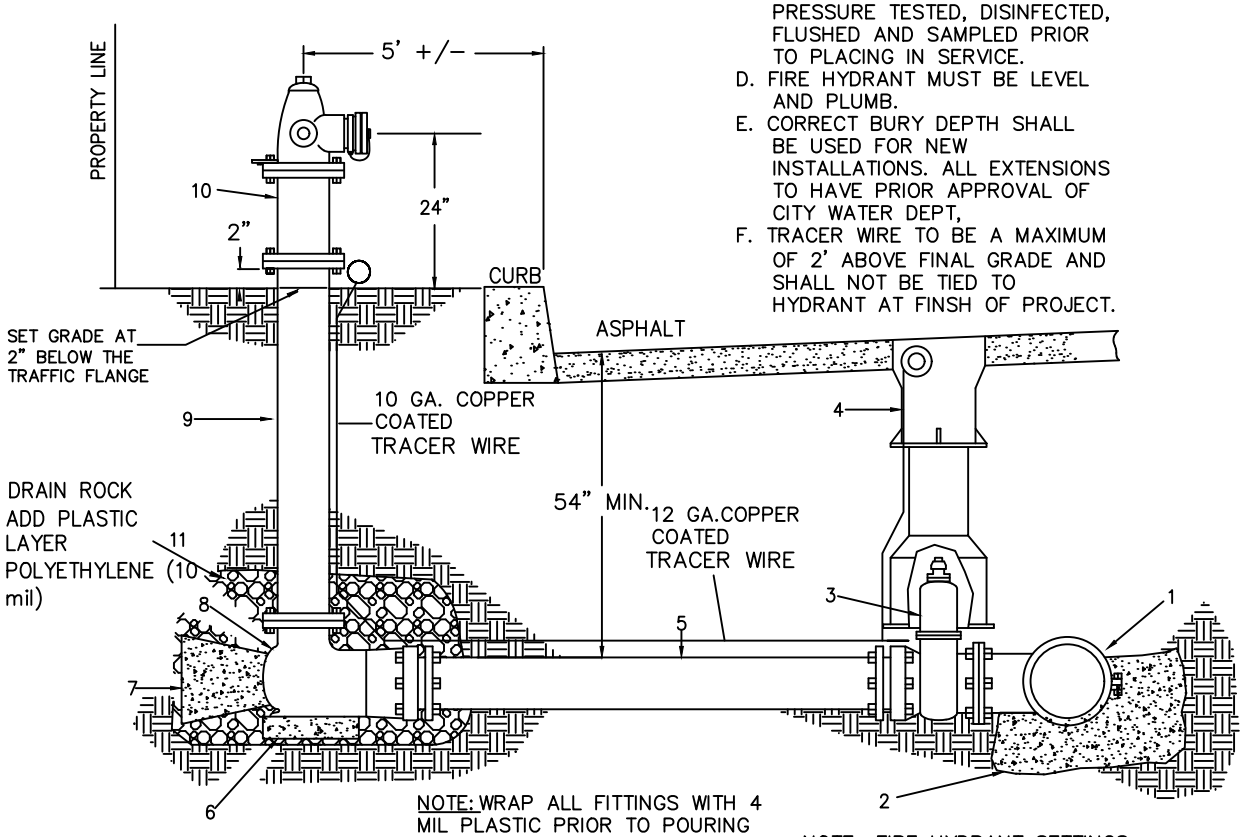

NOTE: WRAP ALL FITTINGS WITH 4 MIL PLASTIC PRIOR TO POURING THRUST BLOCKS.

NOTE: FIRE HYDRANT SETTINGS

A. SHALL BE SQUARE TO CLOSEST CURB.
B. ALL PORT CAP CHAINS SHALL BE ATTACHED TO CAPS AND HYDRANT.
C. ALL FIRE HYDRANTS SHALL BE SAFETY CHROME RED ONLY!
D. ALL FIRE HYDRANTS SHALL BE A MINIMUM OF 5' FROM DRIVEWAYS OR OTHER FIXED OBSTRUCTIONS.
E. BOLLARDS MAY BE REQUIRED FOR ADDITIONAL PROTECTION BY FIRE DEPT.
F. LIVE TAPS ONLY WHEN ATTACHING TO EXISTING WATER MAINS.

HYDRANT SPECIFICATIONS

* 6" DRYBARREL FIRE HYDRANT SUITABLE FOR A 5' TRENCH.
* 6" MECHANICAL JOINT BOTTOM CONNECTION.
* 1 1/2" PENTAGON OPERATING NUT, OPEN LEFT.
* TWO 2 1/2" HOSE NOZZLES NST.
* ONE PUMPER NOZZLE 4 1/2" STORZ PORT.
* HYDRANT COLOR-RED.
* 150 IBS. W.W.P., 300 IBS. WTP.
* MODERN PROFILE TYPE.

ITEM NO.	NO. REQ'D	DESCRIPTION
1	1	MAIN SIZE MJ x 6" FLANGE CAST IRON TEE OR DIRECT TAP SADDLE.
2	1	CONCRETE BLOCKING PER ISPWC SD-403.
3	1	6" FLANGE x MJ GATE VALVE
4	1	TYLER CAST IRON VALVE BOX W/LID. SERIES 6855 OR APPROVED EQUAL.
5	1	6" C-900 PVC PIPE x REQ'D LENGTH OR APPROVED EQUAL. BELL RESTRAINTS REQUIRED IF MORE THAN ONE STICK OF PIPE.
6	1	CONCRETE BLOCKING - 12" WIDE x 12" LONG x 4" THICK.
7	1	CONCRETE BLOCKING PER ISPWC SD-403.
8	1	BASE
9	1	EXTENSION - SIZED AS NEEDED FOR CORRECT BURY DEPTH.
10	1	FIRE HYDRANT - 5 1/4 WATEROUS PACER TRAFFIC MODEL OR MUELLER CENTURION MODEL 200.
11	1	PLACE POLYETHYLENE SHEET (10 mil.) BETWEEN DRAIN ROCK AND NATIVE.
		NOTE: NUMBERS 8-10 COME PREASSEMBLED AS ONE UNIT. NOTE: ONLY NEW ASSEMBLIES WILL BE USED TO REPLACE OR RELOCATE AN EXISTING HYDRANT

REVISION	APPROVED	DATE

CITY OF MOSCOW STANDARD DRAWING

TYPICAL 6" FIRE HYDRANT SETTING

APPROVED BY:

CITY ENGINEER, PE 10804 DATE:

DWG NO. W-3

TYLER 6855 HD SERIES CAST IRON VALVE BOX

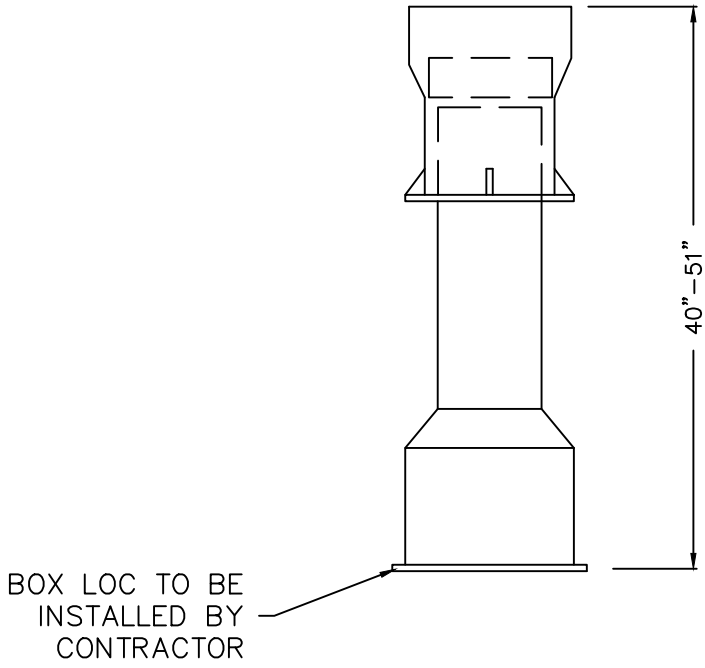

BOX COMPLETE

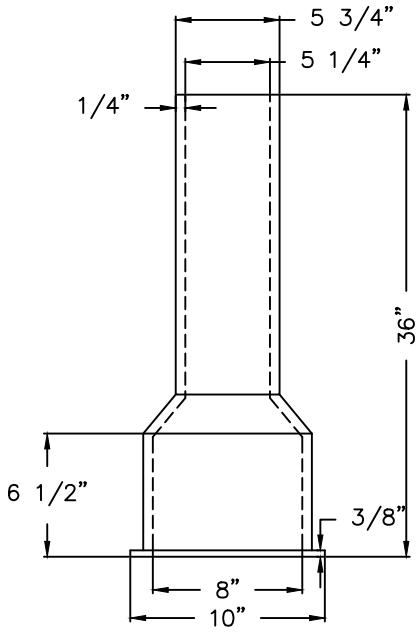

BOTTOM

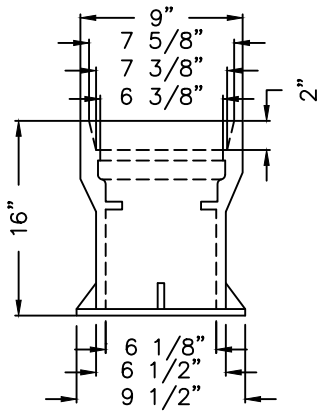

TOP

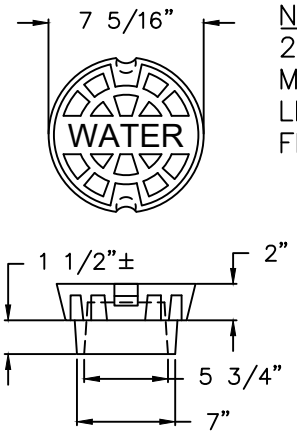

5 1/4" DROP LID

NOTE:
2. ALL FIRE LINES MUST USE SEPARATE LID FOR DEDICATED FIRE LINES

BOX COMPLETE EXTENSION. IN INCHES	WEIGHT	TOP SECTION W/LID LENGTH	WEIGHT	BOTTOM LENGTH	WT.
40"–51"	90 LB.	16"	45 LB.	36"	45 LB.

Tyler Cast Iron Valve Box Series 6855 HD with heavy lid or approved equal
Accommodates 4" Through 12" Valves, 5 1/4" Shafts, Slip–Type

REVISION	APPROVED	DATE	CITY OF MOSCOW STANDARD DRAWING	APPROVED BY:
			CAST IRON VALVE BOX TWO PIECE	CITY ENGINEER, PE 10804 — DATE:
				DWG NO. W-12

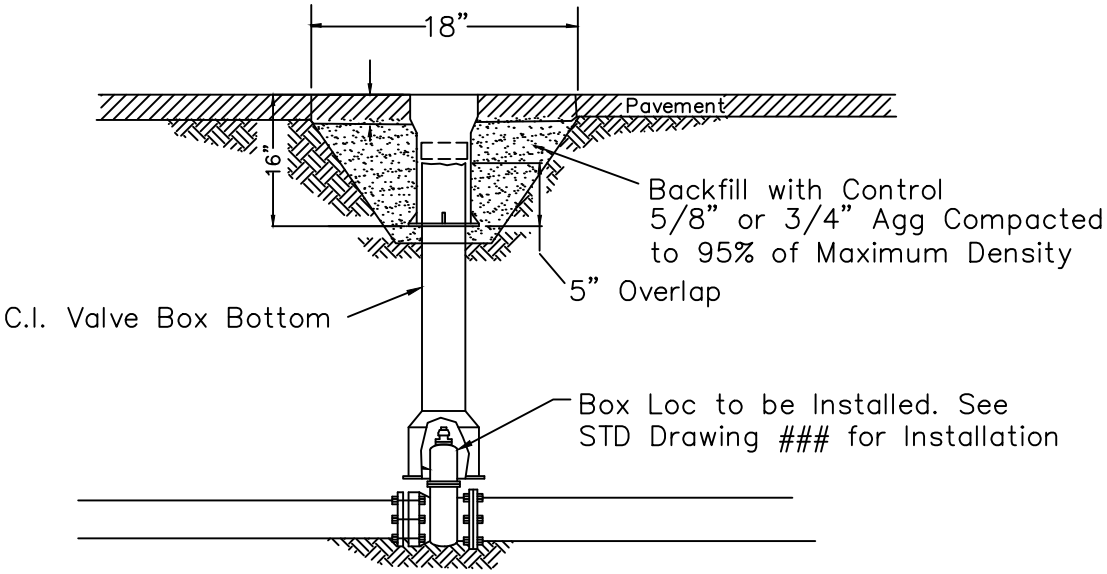

TYLER CAST IRON VALVE BOX 6855 HD, WITH NO FLIP "WATER" HEAVY LID, 16" x 6 1/8" ID TO SLIP OVER C.I. VALVE BOX BOTTOM SECTION.

FOR OVERLAY PROJECTS WHERE EXISTING TYLER VALVE BOXES ARE PRESENT, MAY USE 5" DOUBLE HUB SOIL PIPE AS BOTTOM BOX EXT..

Note: See Standard Drawing #### for Plan View Profile.

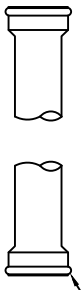

5" C.I. double hub soil pipe extension, cut to length as required. (Makes two extensions)

REVISION	APPROVED	DATE	CITY OF MOSCOW STANDARD DRAWING	APPROVED BY:
			VALVE BOX ADJUSTMENT	CITY ENGINEER, PE 10804 — DATE:
				DWG NO. W-13

BOXLOX TYPE 1

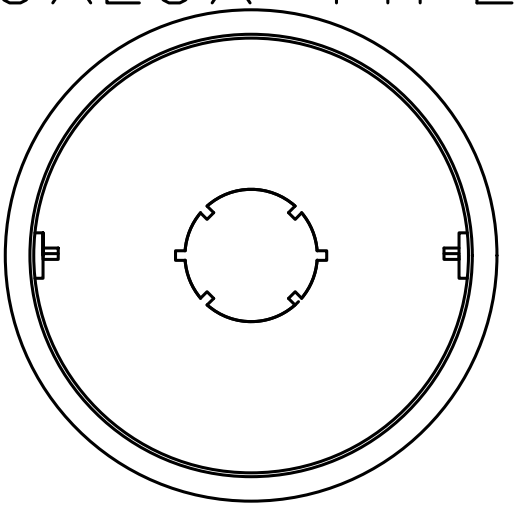

BOXLOX TYPE 2

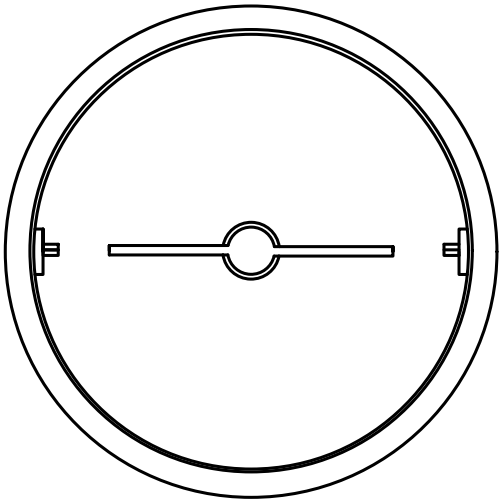

NOTES:
1. ALL BOXLOX PRODUCTS ARE DEISNGED AS A CENTERING DEVICE
2. THESE UNITS SHOULD ONLY BE USED INSIDE THE VALVE BOX OR ANOTHER GENREALLY ACCPETED UNIT TO ACHIEVE OPERATING NUT ACCESS ON THE VALVE.
3. THE BOXLOX SHOULD NOT BE USED IN A SITUATION WHERE A VERTICAL LOAD IS PLACE ON BOXLOX. THIS WILL CAUSE THE UNIT TO BIND THE OPERATING UNIT.

REVISION	APPROVED	DATE	CITY OF MOSCOW STANDARD DRAWING	APPROVED BY:
			BOXLOX DETAIL	CITY ENGINEER, PE 7432 — DATE:
				DWG NO. W-14

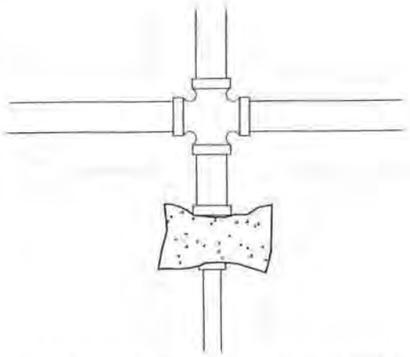

CROSS WITH REDUCER

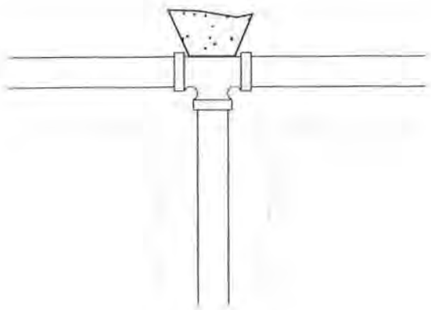

TEE

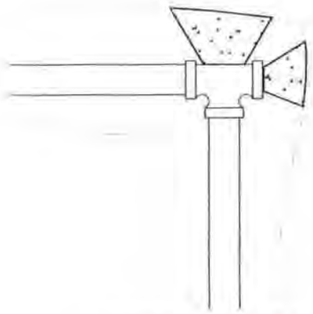

TEE WITH PLUG

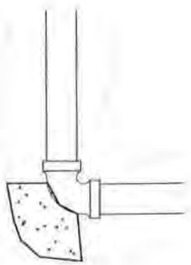

90° ELBOW

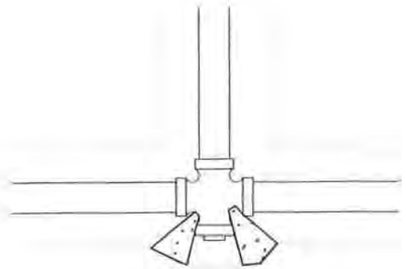

CROSS WITH PLUG

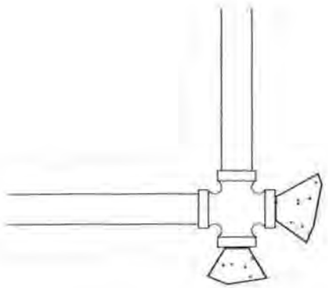

CROSS WITH 2 PLUGS

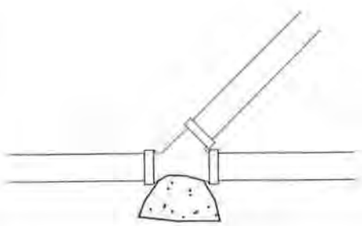

WYE

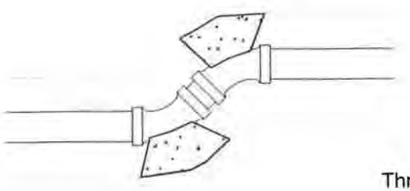

11-1/4°, 22-1/2°
OR 45° BENDS

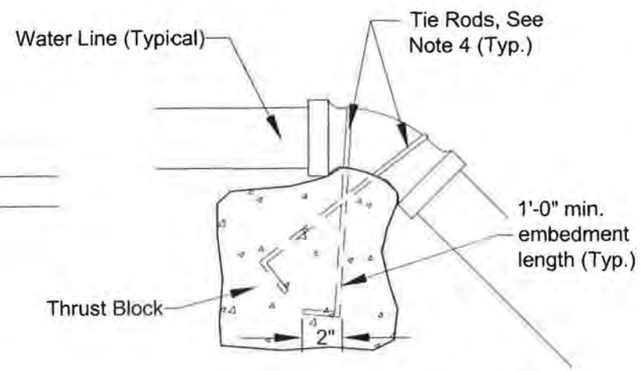

VERTICAL DOWN BENDS

THRUST BLOCK SIZE

Size of Pipe	Horizontal Bends Sq. Feet of Bearing on Undisturbed Earth				Vertical Down Bends Cu.Yds.
	Tees & Deadends	90°	45°	$22\frac{1}{2}°$ / $11\frac{1}{4}°$	
4"	2	3	1-1/2	1	1/2
6"	4	5-1/2	3	1-1/2	1/2
8"	7	9-1/2	5	2-1/2	1
10"	11	15	8-1/2	4	1-1/2
12"	15-1/2	22	12	6	2
16"	21	27	21	11	2-1/2

NOTES:

1. Thrust blocking for water mains shall be, as a minimum, the size indicated in the above Table.
2. Concrete shall be from a commercial source and be a minimum of 5-sack mix or ITD Class 22.
3. Concrete shall not be allowed in joints or in contact with pipes. Protect with plastic or paper sheeting prior to placing concrete.
4. Tie rods shall be 3/4" minimum diameter steel; coat tie rods with bituminous coating or approved equal. Hook (2" min.) all embedded ends.
5. The minimum distance between the fitting and excavated bank shall be three (3) pipe diameters.
6. Thrust blocks shall be cast against firm, undisturbed earth, as approved by the City Engineer.
7. Thrust blocks must be inspected by the City prior to backfill.
8. Thrust blocks for vertical up bends shall correspond to the requirements of horizontal bends.

REVISIONS

DATE	DESCRIPTION

SIGNED AND DATED

PROFESSIONAL ENGINEER REGISTERED 8832 5-19-14 STATE OF IDAHO KEVIN LILLY

DRAFTED BY: RKC/KWK

CHECKED BY: K.Lilly

DRAWING SCALE: N.T.S.

DATE: 2-6-2012

WATER MAIN THRUST BLOCKING

CITY OF MOSCOW
ENGINEERING DEPARTMENT

DRAWING NUMBER:
31

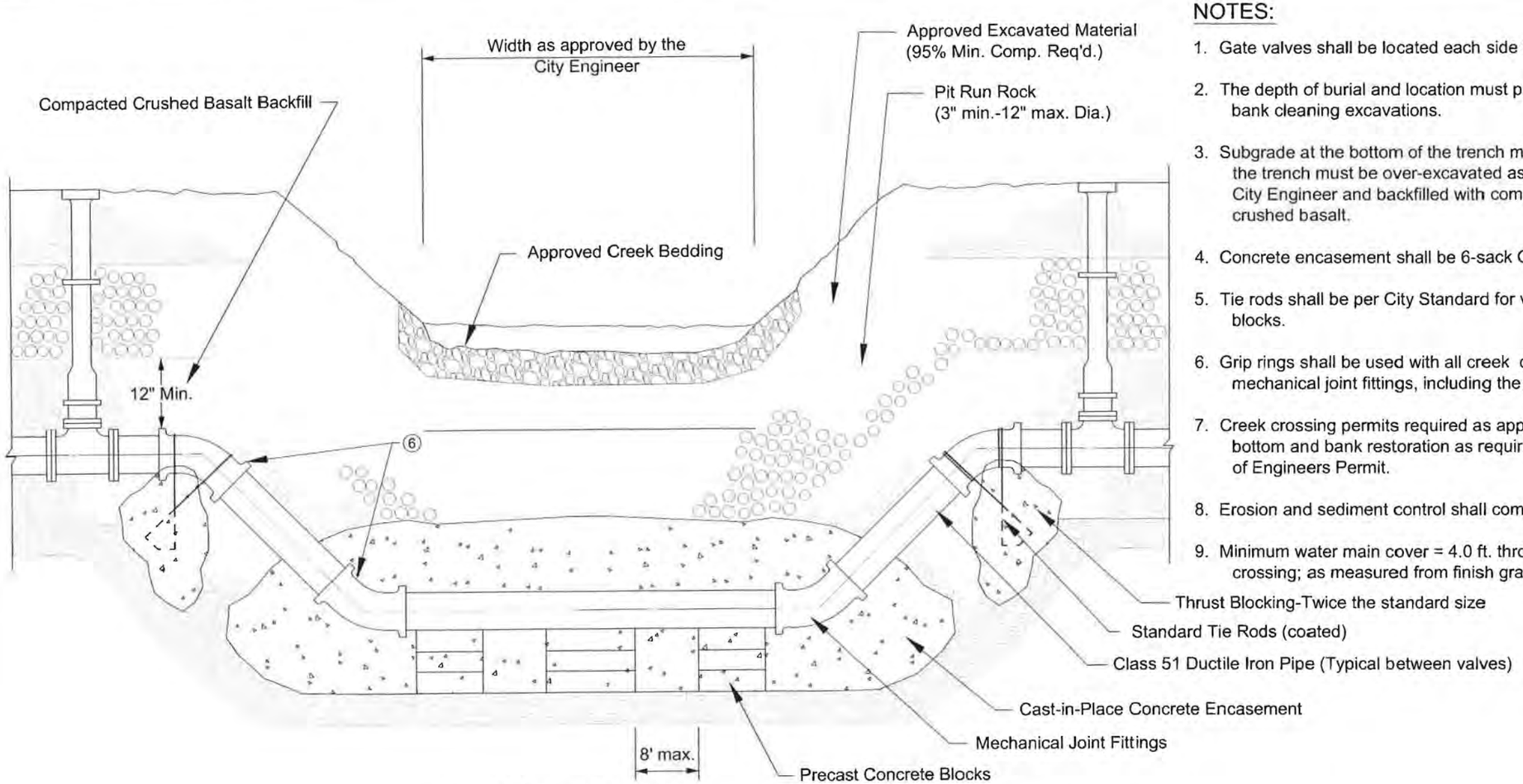

TRANSVERSE SECTION

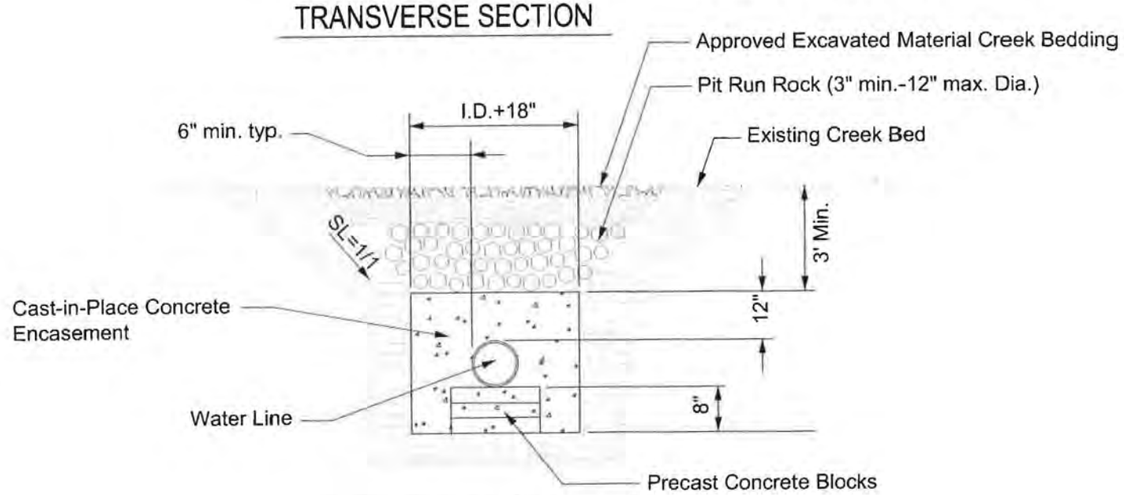

LONGITUDINAL SECTION

NOTES:

1. Gate valves shall be located each side of the crossing.
2. The depth of burial and location must provide for creek bank cleaning excavations.
3. Subgrade at the bottom of the trench must be firm. If not, the trench must be over-excavated as directed by the City Engineer and backfilled with compacted 3/4"(-) crushed basalt.
4. Concrete encasement shall be 6-sack City Standard.
5. Tie rods shall be per City Standard for vertical thrust blocks.
6. Grip rings shall be used with all creek crossing mechanical joint fittings, including the gate valves.
7. Creek crossing permits required as applicable. Creek bottom and bank restoration as required by Army Corps of Engineers Permit.
8. Erosion and sediment control shall comply with City Code.
9. Minimum water main cover = 4.0 ft. throughout the crossing; as measured from finish grade to top of pipe.

REVISIONS	
DATE	DESCRIPTION

SIGNED AND DATED

PROFESSIONAL ENGINEER REGISTERED 8832 5-19-14 STATE OF IDAHO KEVIN LILLY

DRAFTED BY: MAS/KWK

CHECKED BY: K.Lilly

DRAWING SCALE: NTS

DATE: 3-5-2014

WATER MAIN CREEK CROSSING

CITY OF MOSCOW
ENGINEERING DEPARTMENT

DRAWING NUMBER: 32

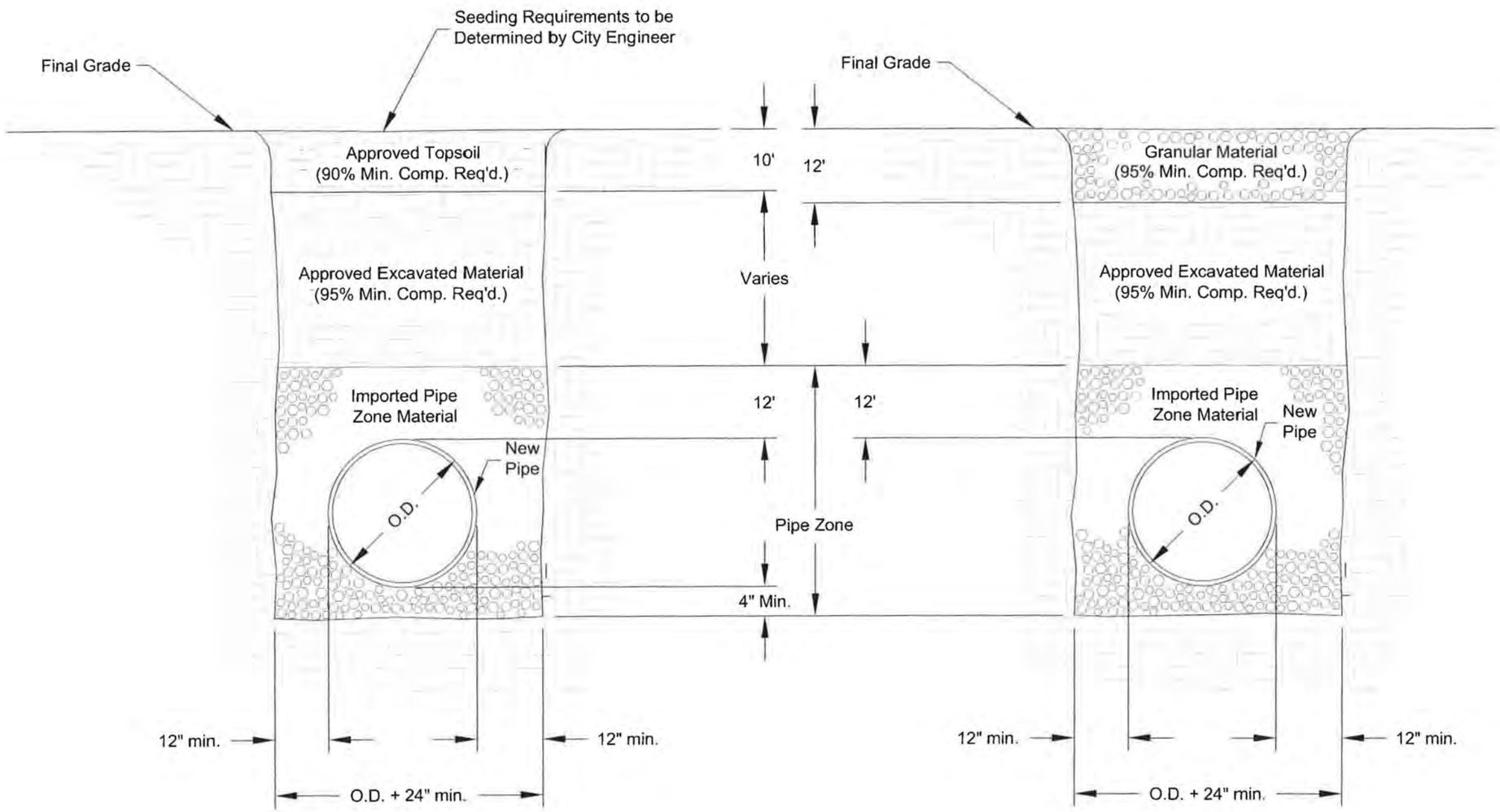

BACKFILL CLASS A
TYPICAL SECTION

BACKFILL CLASS B
TYPICAL SECTION

NOTES:

1. Class 'A' Backfill shall be used in areas where there is to be re-vegetation and some trench settlement may be tolerated.
2. Class 'B' Backfill may not be constructed within the public right-of-way and has limited application - refer to the City's Standard Construction Specifications.
3. Contractor shall comply with the most current OSHA requirements for excavations.
4. Backfill shall comply with the requirements of the City's Standard Construction Specifications.

REVISIONS	
DATE	DESCRIPTION

SIGNED AND DATED

PROFESSIONAL ENGINEER REGISTERED 8832 5-19-14 STATE OF IDAHO KEVIN LILLY

DRAFTED BY: K.Kipp/C.Edwards
CHECKED BY: K.Lilly
DRAWING SCALE: NTS
DATE: 3-5-2014

BACKFILL CLASS A & B

CITY OF MOSCOW
ENGINEERING DEPARTMENT

DRAWING NUMBER: 33a

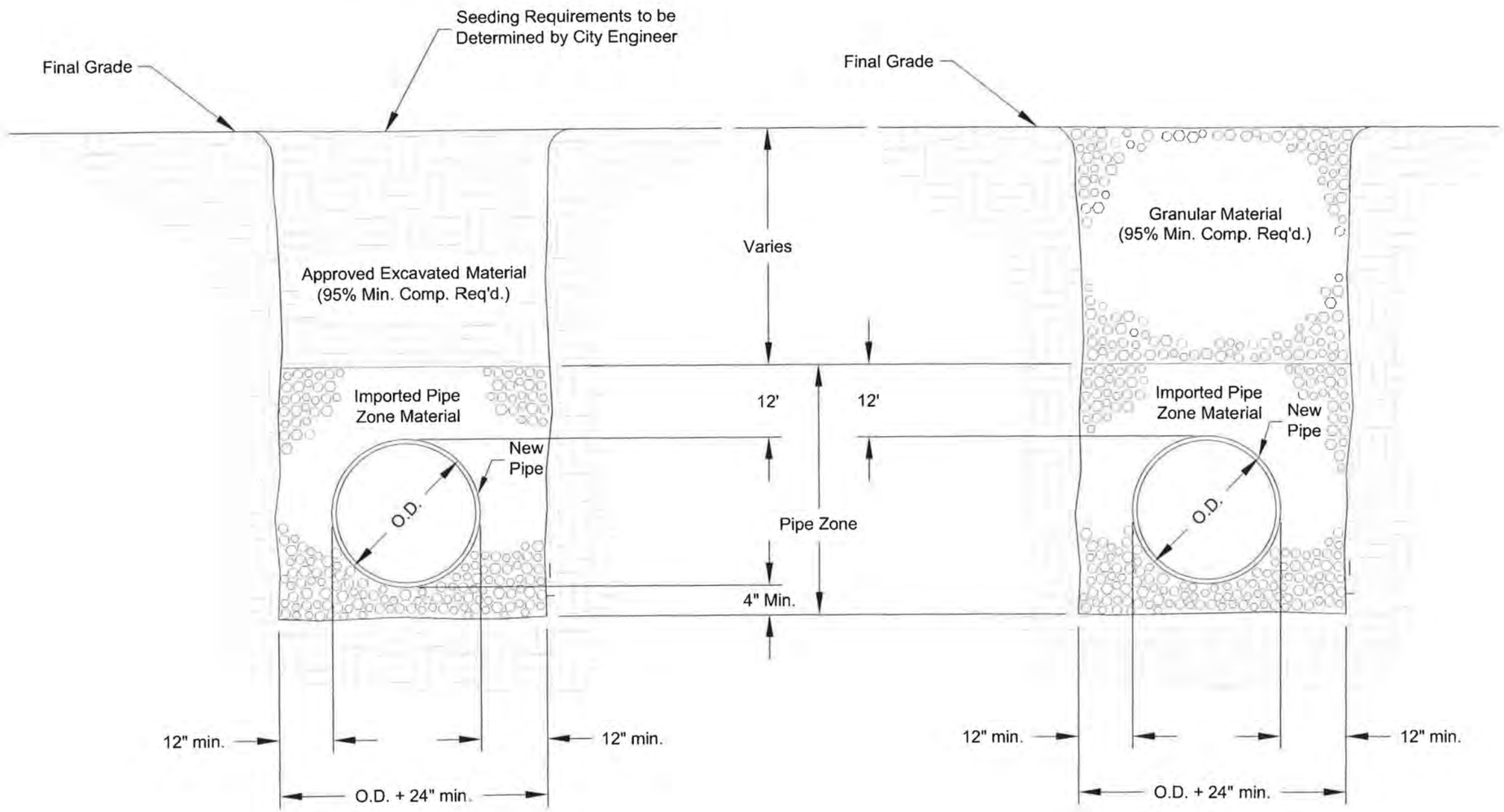

BACKFILL CLASS C
TYPICAL SECTION

BACKFILL CLASS D
TYPICAL SECTION

NOTES:

1. Class 'C' Backfill shall be used in areas where asphalt pavement, concrete curb, sidewalk, driveway, or gravel surfacing is not anticipated and where topsoil is not required.
2. Class 'D' Backfill is for areas where asphalt pavement, concrete, curb, sidewalk, or gravel surfacing is existing or anticipated.
3. Contractor shall comply with the most current OSHA requirements for excavations.
4. Backfill shall comply with the requirements of the City's Standard Construction Specifications.

REVISIONS	
DATE	DESCRIPTION

SIGNED AND DATED

PROFESSIONAL ENGINEER REGISTERED 8832 STATE OF IDAHO KEVIN LILLY 5-8-14

DRAFTED BY: K.Kipp/C.Edwards
CHECKED BY: K.Lilly
DRAWING SCALE: NTS
DATE: 3-5-2014

BACKFILL CLASS C & D

CITY OF MOSCOW
ENGINEERING DEPARTMENT

DRAWING NUMBER: 33b

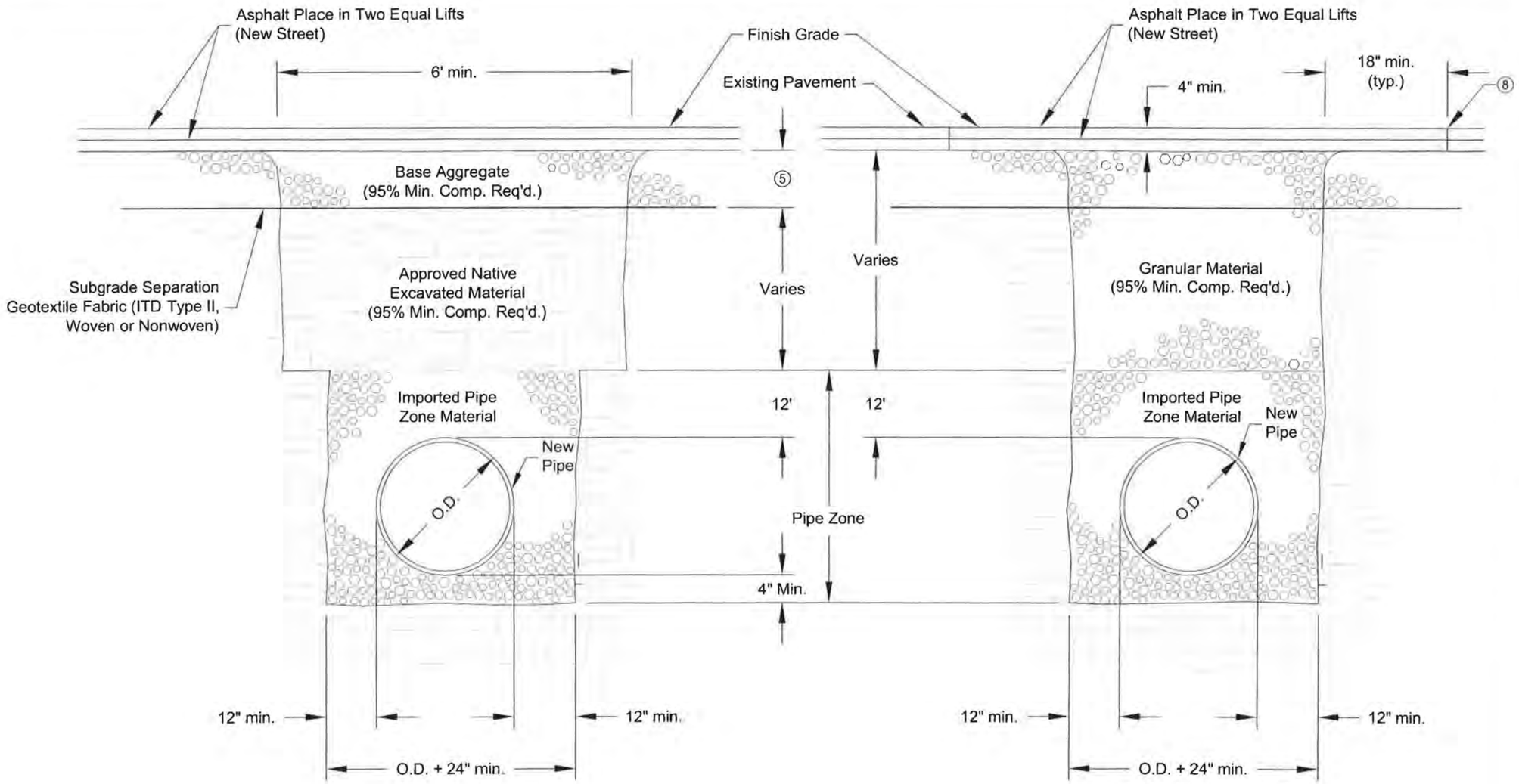

BACKFILL CLASS E
TYPICAL SECTION

BACKFILL CLASS F
TYPICAL SECTION

NOTES:

1. Class 'E' Backfill may be substituted for Class 'D' Backfill within new streets only (not existing streets) if specifically allowed by the City Engineer.
2. Class 'F' Backfill shall be utilized in trenches within existing pavement.
3. Compaction for all trench backfill above the pipe zone shall be 95% minimum of AASHTO T99. All native backfill material shall be placed in six inch (6") maximum lifts and wide sheepsfoot roller. Density testing frequency for native backfill will be in excess of that required for the Class 'D' crushed aggregate backfill.
4. Backfill around manholes and catch basins shall be all crushed aggregate; native material backfill will not be allowed.
5. Base aggregate depth and type to be the same as that required for the street section where this trench backfill is utilized.
6. All trenches excavated within existing paved streets shall be backfilled and surfaced the same day with a two inch (2") thick compacted cold mix asphalt patch (smooth) - to be replaced with the City's standard four inch (4") hot mix asphalt surfacing as soon as scheduling allows; unless specifically approved otherwise by the City Engineer.
7. The new asphalt patch shall match the existing pavement grade. Across the width of the trench, the new surface shall not exceed 0.25 inches out-of-level.
8. Existing pavement shall be cut full depth and in continuous, straight lines. Broken edges will not be allowed. Pavement cuts shall be 'tacked' immediately prior to installation of the hot mix patch.
9. Contractor shall comply with the most current OSHA requirements for excavations.
10. Backfill shall comply with the requirements of the City's Standard Construction Specifications.

REVISIONS	
DATE	DESCRIPTION

SIGNED AND DATED

PROFESSIONAL ENGINEER REGISTERED 8832 5-19-14 STATE OF IDAHO KEVIN LILLY

DRAFTED BY: K.Kipp/C.Edwards
CHECKED BY: K.Lilly
DRAWING SCALE: NTS
DATE: 3-5-2014

BACKFILL CLASS E & F

CITY OF MOSCOW
ENGINEERING DEPARTMENT

DRAWING NUMBER: 33c

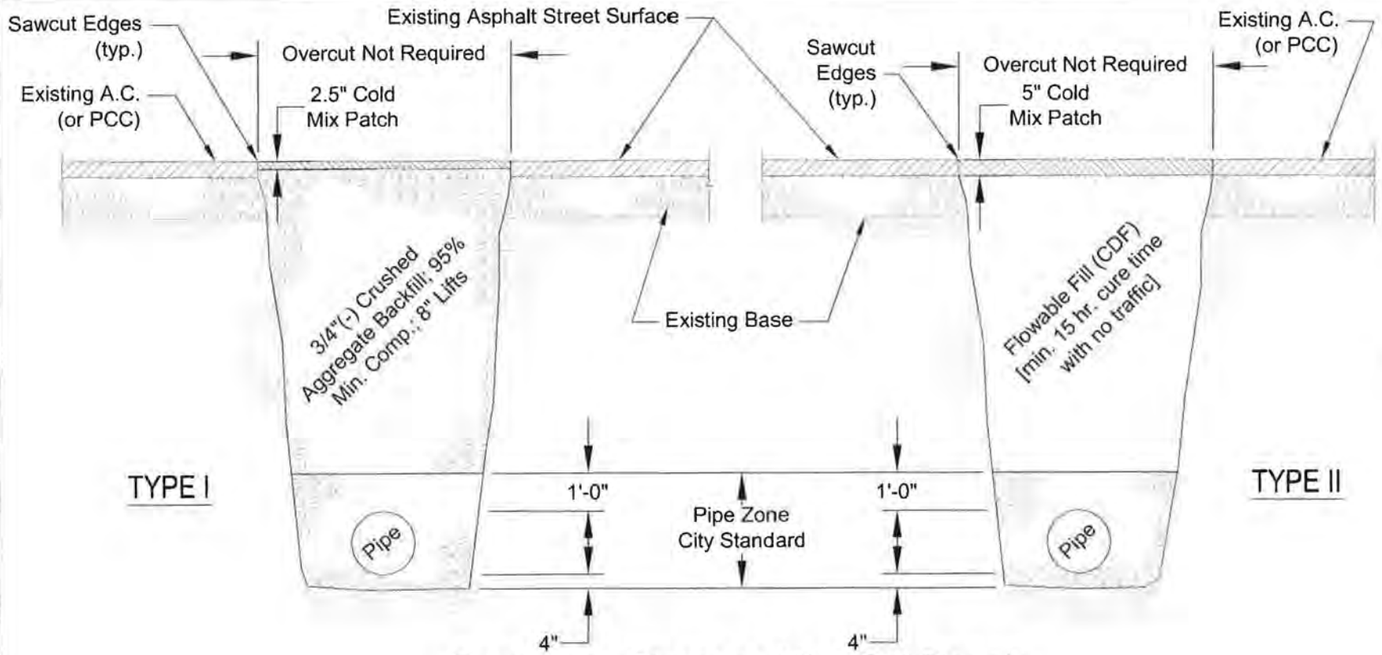

Temporary Street or Alley Cut Repair
[Step One - Temp.]

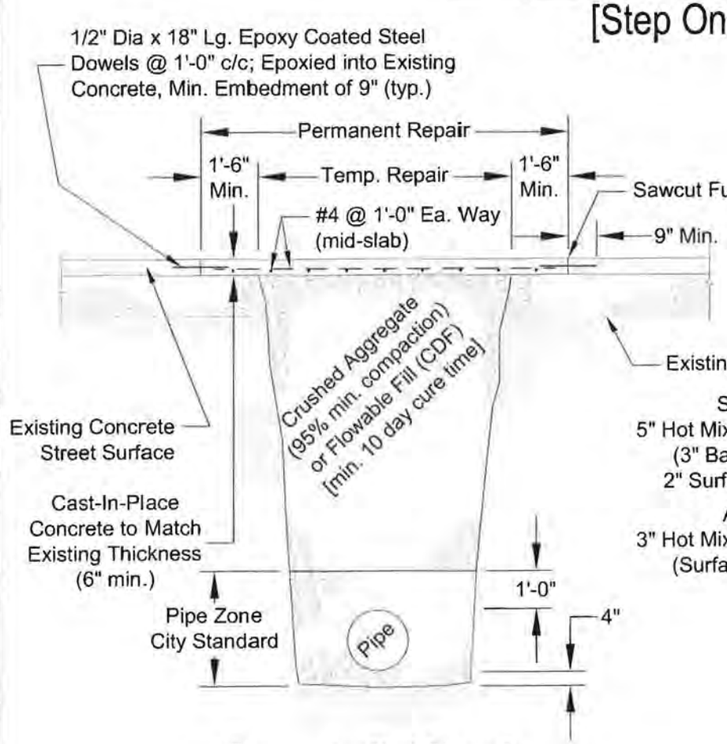

Concrete Cut Repair
[Step Two - Permanent]

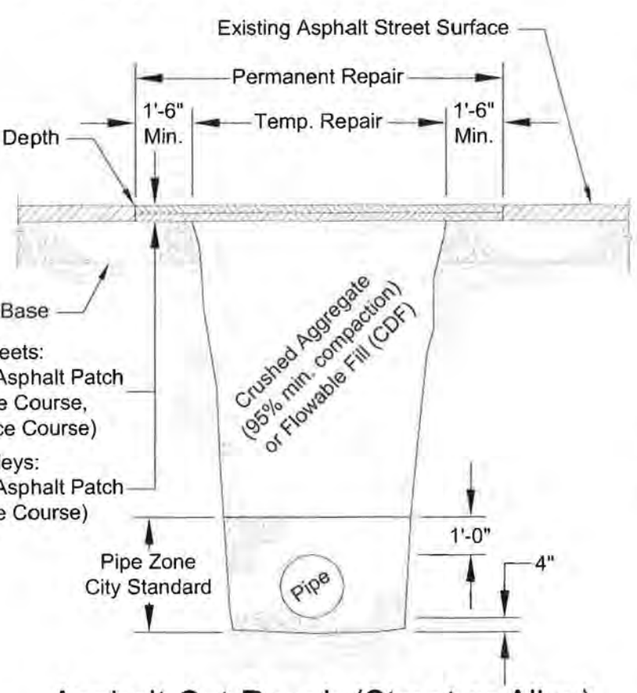

Asphalt Cut Repair (Street or Alley)
[Step Two - Permanent]

NOTES:

1. All excavations made within public right-of-way and easements require excavation permits from the City prior to commencing work. Street closure permits are required as applicable.
2. See City of Moscow Standard Construction Specifications for additional requirements regarding street and alley cut repair.
3. Prior to commencing, contractor shall furnish, install and maintain traffic control in accordance with the Manual on Uniform Traffic Control Devices (MUTCD) and as allowed and approved by the City Engineer.
4. Street cuts within Idaho Highway Right-of-Way require an Idaho Transportation Department (ITD) permit and are subject to ITD permit conditions (i.e. backfilling, surfacing requirements and traffic control).
5. The pavement removal required to perform the initial excavation shall be the width of the excavation opening and is not to include the removal of the pavement of the width required to construct the permanent patch. All pavement cuts shall be sawcut in neat, straight lines, as allowed and approved by the City. The limits of the pavement cut for the permanent patch shall be as described in the Standard Construction Specifications.
6. Moscow Public Works Department shall be notified prior to beginning backfilling operations. Noncompliance with this provision shall require re-excavation and witnessed compaction.
7. ALL STREET AND ALLEY CUTS IN EXISTING ASPHALT PAVEMENT SHALL BE BACKFILLED AND TEMPORARILY PATCHED AT THE END OF EACH DAY - unless specifically allowed otherwise by the City Engineer. Properly applied steel plates may be utilized in lieu of this requirement if allowed by the City.
8. Temporary street surfacing (cold mix asphalt or flowable fill) shall be placed (and maintained) uniformly smooth across the width and length of the patch and shall match the existing, adjoining street grade. The finished surface of the temporary patch shall be level with, or no greater than 0.25 inches above the adjacent roadway surface.
9. Temporary street surface repair maintenance is the responsibility of the contractor.
10. The contractor making the cut shall be responsible for any future settling of the street cut for a period of one year from the date that temporary patch is completed.

REVISIONS	
DATE	DESCRIPTION

SIGNED AND DATED

PROFESSIONAL ENGINEER REGISTERED 8832 5-19-14 STATE OF IDAHO KEVIN LILLY

DRAFTED BY: C.Edwards
CHECKED BY: K.Lilly
DRAWING SCALE: NTS
DATE: 3-5-2014

STREET / ALLEY CUT REPAIR

CITY OF MOSCOW
ENGINEERING DEPARTMENT

DRAWING NUMBER: 34

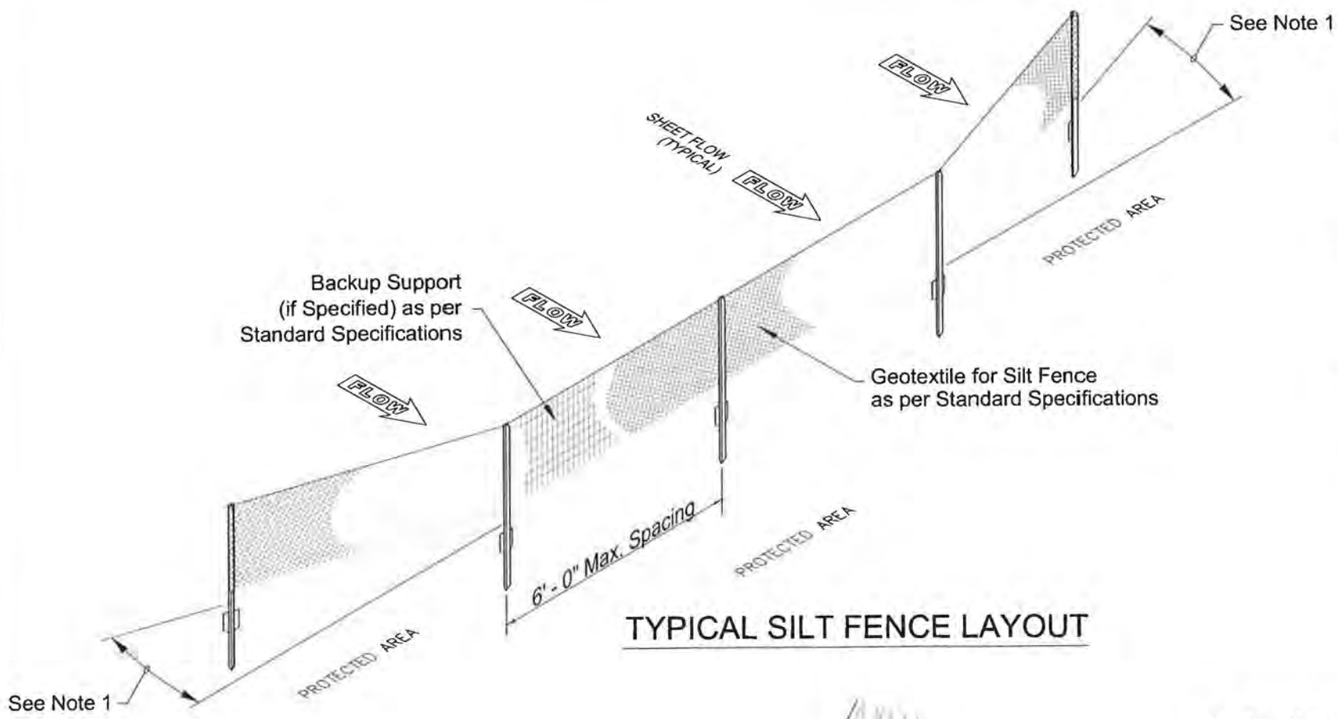

TYPICAL SILT FENCE LAYOUT

NOTES:

1. Install ends of silt fence slightly up slope to prevent sediment from flowing past ends of fence. See Typical Silt Fence Layout.
2. Overlap vertical silt fence splices eight inches (8") minimum and construct in a manner to prevent silt laden runoff from passing between posts. Avoid placing splices at sumps and other low points.
3. Do not install silt fence in a manner that it will act as a dam across permanent flowing watercourses. Silt fences are to be used at upland locations and turbidity barriers used at permanent bodies of water.
4. If backup support is specified, attach fabric to backup support in a manner to hold fabric securely and reduce the potential of tearing.
5. During excavation, minimize ground disturbance around anchor trench and smooth surface to prevent concentrated flows. Compact backfill in trench in a manner that will prevent underflow.

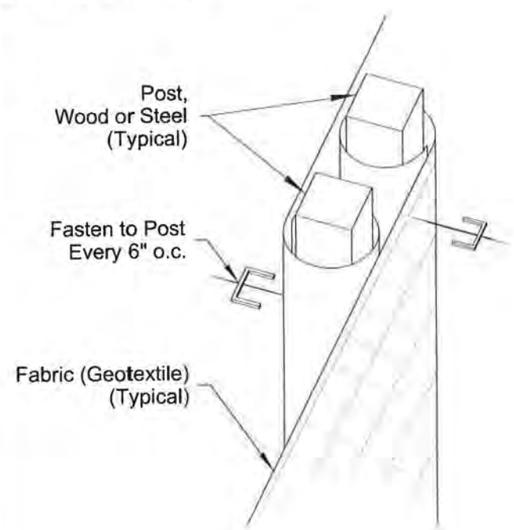

SPLICE DETAIL

(WOOD POSTS AND NO BACKUP SUPPORT SHOWN)

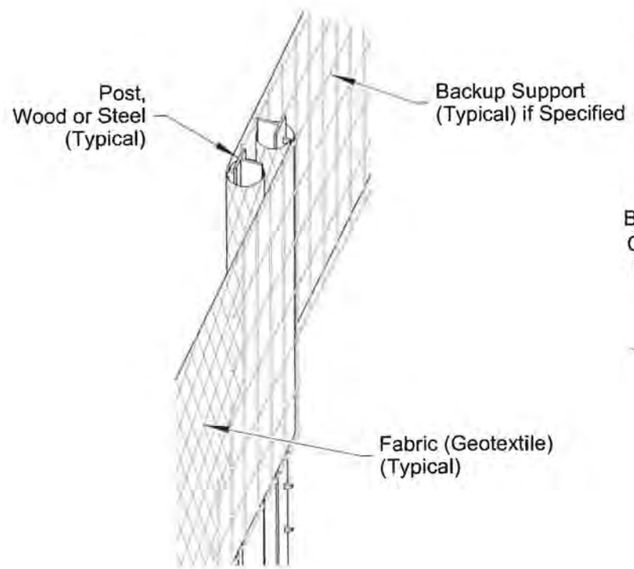

SPLICE DETAIL

(STEEL POSTS AND BACKUP SUPPORT SHOWN)

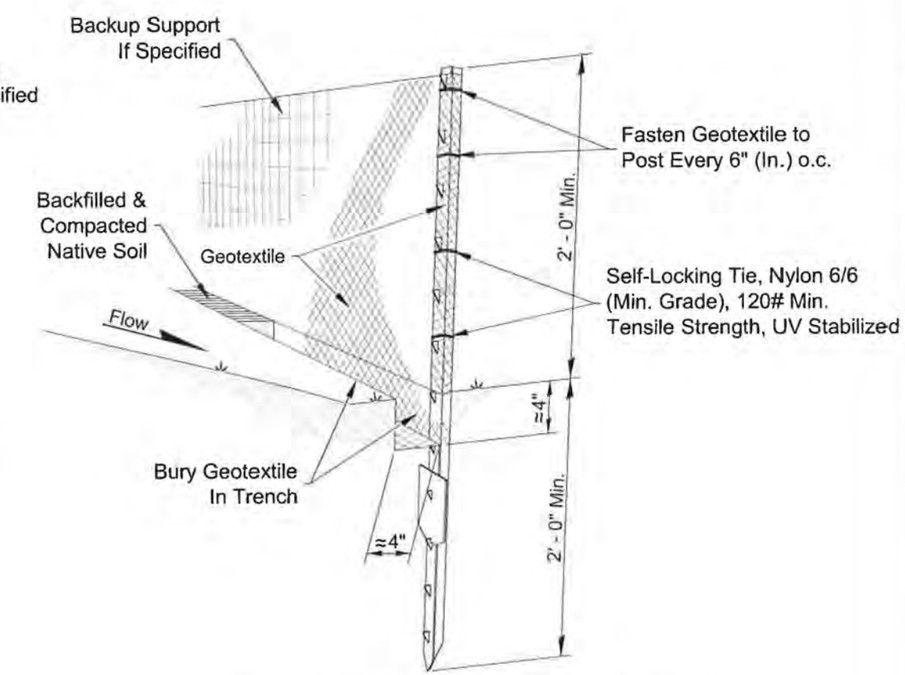

TYPICAL INSTALLATION DETAIL

REVISIONS	
DATE	DESCRIPTION

SIGNED AND DATED

PROFESSIONAL ENGINEER REGISTERED 8832 5-15-14 STATE OF IDAHO KEVIN LILLY

DRAFTED BY: C.Edwards

CHECKED BY: K.Lilly

DRAWING SCALE: NTS

DATE: 3-5-2014

SILT FENCE

CITY OF MOSCOW
ENGINEERING DEPARTMENT

DRAWING NUMBER: 35

NOTES:

1. The size and shape of the silt trap sack to fit the storm structure it will service (rectangular or round).
2. The silt trap sack shall have a built-in high-flow relief system (overflow bypass).
3. The silt trap sack assembly must allow removal without spilling the collected material.
4. Empty silt trap sack and dispose of sediment and debris before the sack is half-full.
5. Ensure the silt trap sack assembly does not spill or fall into the storm structure. If sediment is spilled into the storm structure, remove the spilled material by suction hose or other approved method.
6. Construction entrances should be inspected regularly for signs of thinning areas where mud begins to show through. Add gravel periodically to maintain the integrity of the pad.

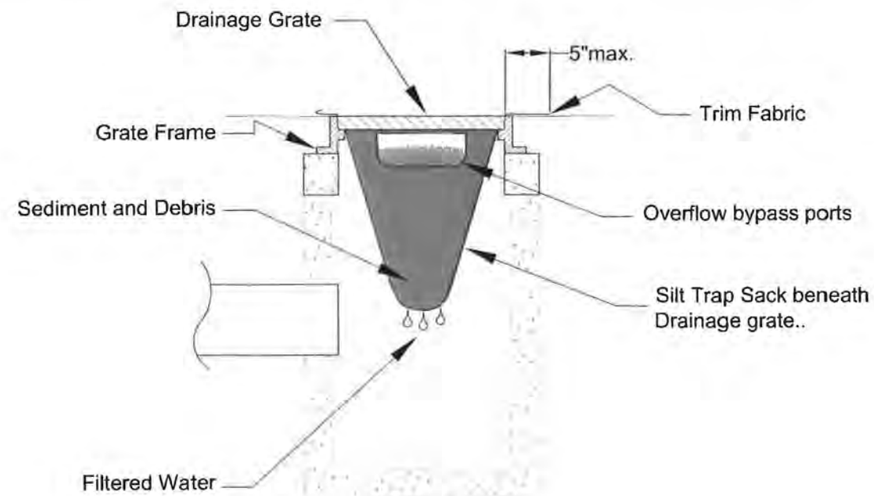

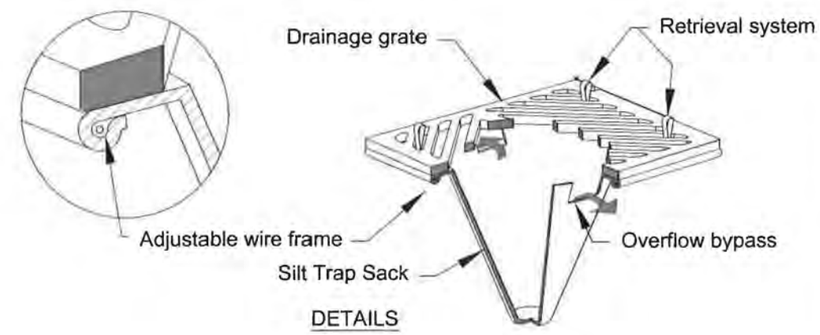

DETAILS

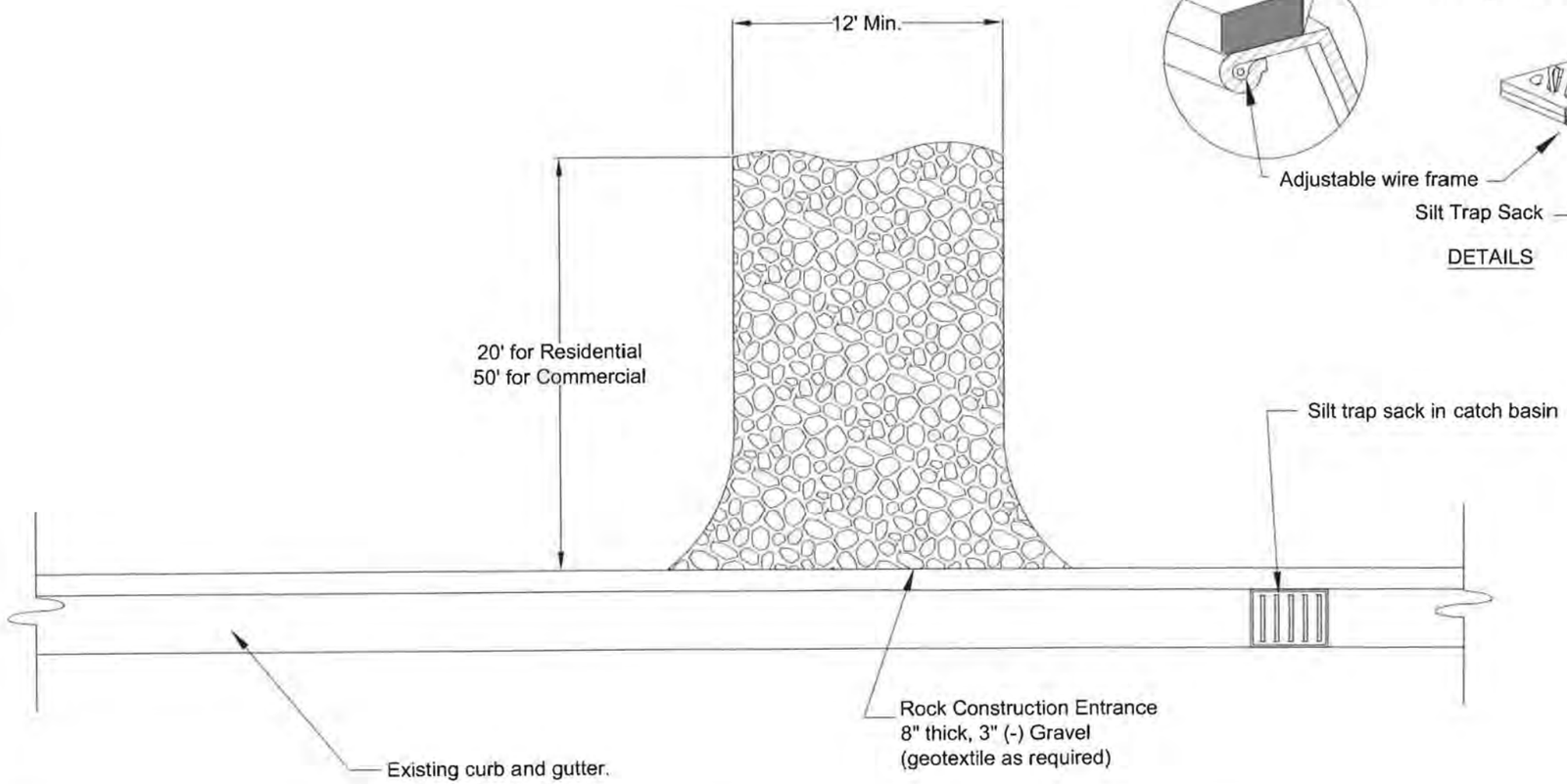

REVISIONS	
DATE	DESCRIPTION

SIGNED AND DATED

PROFESSIONAL ENGINEER REGISTERED 8832 5-19-14 STATE OF IDAHO KEVIN LILLY

DRAFTED BY: C.Edwards

CHECKED BY: K.Lilly

DRAWING SCALE: NTS

DATE: 3-5-2014

CONSTRUCTION ENTRANCE & INLET PROTECTION

CITY OF MOSCOW
ENGINEERING DEPARTMENT

DRAWING NUMBER:
36

THIS PAGE WAS INTENTIONALLY LEFT BLANK

City of Moscow, Idaho
Latah County
Sixth Street Crossing Over Paradise Creek

BID FORM

Table of Contents

Page

Article 1 – Bid Recipient 1

Article 2 – Bidder's Acknowledgements 1

Article 3 – Bidder's Representations 1

Article 4 – Bidder's Certification 2

Article 5 – Basis of Bid 3

Article 6 – Time of Completion 5

Article 7 – Attachments to This Bid 6

Article 8 – Defined Terms 6

Article 9 – Bid Submittal 6

THIS PAGE WAS INTENTIONALLY LEFT BLANK

ARTICLE 1 – BID RECIPIENT

1.01 This Bid is submitted to:

City of Moscow Attn: Deputy City Clerk
504 South Washington Street
Moscow, Idaho 83843

1.02 The undersigned Bidder proposes and agrees, if this Bid is accepted, to enter into an Agreement with Owner in the form included in the Bidding Documents to perform all Work as specified or indicated in the Bidding Documents for the prices and within the times indicated in this Bid and in accordance with the other terms and conditions of the Bidding Documents.

ARTICLE 2 – BIDDER'S ACKNOWLEDGEMENTS

2.01 Bidder accepts all of the terms and conditions of the Invitation to Bid and Instructions to Bidders, including without limitation those dealing with the disposition of Bid security. This Bid will remain subject to acceptance for 60 days after the Bid opening, or for such longer period of time that Bidder may agree to in writing upon request of Owner.

ARTICLE 3 – BIDDER'S REPRESENTATIONS

3.01 In submitting this Bid, Bidder represents that:

A. Bidder has examined and carefully studied the Bidding Documents, other related data identified in the Bidding Documents, and the following Addenda, receipt of ~~all~~ which is hereby acknowledged:

Addendum No.	Addendum Date
1	3/14/22
2	3/16/22
3	3/21/22
4	4/04/22

B. Bidder has visited the Site and become familiar with and is satisfied as to the general, local, and Site conditions that may affect cost, progress, and performance of the Work.

C. Bidder is familiar with and is satisfied as to all Laws and Regulations that may affect cost, progress, and performance of the Work.

D. Bidder has carefully studied all: (1) reports of explorations and tests of subsurface conditions at or contiguous to the Site and all drawings of physical conditions relating to existing surface or subsurface structures at the Site (except Underground Facilities) that have been identified in SC-4.02 as containing reliable "technical data," and (2) reports and drawings of Hazardous Environmental Conditions, if any, at the Site that have been identified in SC-4.06 as containing reliable "technical data."

E. Bidder has considered the information known to Bidder; information commonly known to contractors doing business in the locality of the Site; information and observations obtained from visits to the Site; the Bidding Documents; and the Site-related reports and drawings identified in the Bidding Documents, with respect to the effect of such information, observations, and documents on (1) the cost, progress, and performance of the Work; (2) the means, methods, techniques, sequences, and procedures of construction to be employed by Bidder, including applying the specific means, methods, techniques, sequences, and procedures of construction expressly required by the Bidding Documents; and (3) Bidder's safety precautions and programs.

F. Bidder has obtained and carefully studied (or assumes responsibility for having done so) all additional or supplementary examinations, investigations, explorations, test, studies and data concerning conditions (surface, subsurface and Underground Facilities) at or contiguous to the Site which may affect cost, progress, or performance of the Work or which relate to any aspect of the means, methods, techniques, sequences, and procedures of construction to be employed by Bidder, including applying the specific means, methods, techniques, sequences, and procedures of construction expressly required by the Bidding Documents to be employed by Bidder safety precautions and programs incident thereto.

G. Based on the information and observations referred to in Paragraph 3.01.E above, Bidder does not consider that further examinations, investigations, explorations, tests, studies, or data are necessary for the determination of this Bid for performance of the Work at the price(s) bid and within the times required, and in accordance with the other terms and conditions of the Bidding Documents.

H. Bidder is aware of the general nature of work to be performed by Owner and others at the Site that relates to the Work as indicated in the Bidding Documents.

I. Bidder has given Engineer written notice of all conflicts, errors, ambiguities, or discrepancies that Bidder has discovered in the Bidding Documents, and the written resolution thereof by Engineer is acceptable to Bidder.

J. The Bidding Documents are generally sufficient to indicate and convey understanding of all terms and conditions for the performance of the Work for which this Bid is submitted.

ARTICLE 4 – BIDDER'S CERTIFICATION

4.01 Bidder certifies that:

A. This Bid is genuine and is not made in the interest of or on behalf of any undisclosed individual or entity and is not submitted in conformity with any collusive agreement or rules of any group, association, organization, or corporation;

B. Bidder has not directly or indirectly induced or solicited any other Bidder to submit a false or sham Bid;

C. Bidder has not solicited or induced any individual or entity to refrain from bidding; and

ADDENDUM No. 1

City of Moscow, ID, Sixth Street Crossing over Paradise Creek

March 14, 2022

Addendum No. 1 to the **Sixth Street Crossing over Paradise Creek** Bidding Documents prepared by J-U-B ENGINEERS, Inc. is hereby submitted for use in bid preparation and Submittal.

The following clarifications, corrections, or changes are hereby made as fully and completely as if the same were entirely set forth in the Bidding Documents and shall become an integral part of the contract entered into between Owner and Contractor for this project.

Questions

- Specification SP-3002 1.4A.4 and 5 reference DFI's guide to a micropile specification and the PTI. This project has helical piles detailed on the plan sheets and neither of these guides are applicable for helical piles as the DFI micropile specification guide was written for micropile specifications. Helical piles are not micropiles and there is a clear difference between the two foundation elements. The Post Tensioning Institute (PTI) guide was written for post-tensioned anchors such as tiebacks but also applies to micropiles but does not apply to helical piles especially when determining a skin friction. Both references were written for an anchor or pile that is drilled into the ground not twisted. A tieback or micropile is drilled down while all the of spoils are moved typically using air. Helical piles mix the grout in place with existing materials which results in a significantly reduced grout strength which will have a huge impact on the pile skin friction. Please update reference code materials or specify micropiles instead of helical piles.
    - References to DFI and PTI can be deleted.
- Is it acceptable to use micropiles in lieu of helical piles on this project?
    - Yes, although an alternate design would have to be stamped by an Idaho Licensed Engineer and submitted to the City/JUB for review and approval.
- Are the pile loads in compression or tension?
    - Piles will remain in compression.
- Plan Sheet S-102 details a maximum applied axial load of 72.1 kips. Is this the actual load that each pile should be designed for? Is this an LRFD or ASD load?
    - 72.1 kips is the demand. The required nominal strength is 150 kips per pile.
- What is the allowable deflection at design load? Typically, in the micropile industry this is limited to 0.5 inches at design load.
    - Use the design load as the nominal load, i.e. max 0.5-inch vertical deflection due to nominal load of 150 kips per pile.
- Please confirm there are no lateral loads in the piles.
    - There are lateral loads; however, once the culvert structure is in place, some of the loads will transmit through the top slab of the culvert into the fill material on the other side of the creek. The lateral load will be resisted by the battered piles. Lateral loads are relatively small.
- Is it allowable to perform the performance axial load test in tension as it is more conservative due to Poisson's ratio?
    - The compression load test is specified to replicate the load conditions that will be applied to the piles in service. Depending on the installation conditions, tension load testing may not accurately represent the performance of the HPMs.

- Does the helical pile design account for a steel section loss of 1/16" per International Building Code recommendation?
    - HPM components that are not completely encased in grout, are to have galvanized coating to protect against corrosion.
- Who is responsible for the design of the helical piles or micropiles?
    - The HPM design is included in the geotechnical deliverable. Any alternative designs would be provided by the Contractor.
- Who is responsible for piles which fail performance or proof tests?
    - The Contractor is responsible for failed piles.
- Is there any proof testing required for this project? Performance testing is used to verify the ultimate skin friction can be obtained and verified. Proof tests are used to ensure construction installation is consistent.
    - No proof tests are required. The specification requires 1 performance test in compression on a production HPM.
- Can the performance test be performed on a production pile or is it sacrificial?
    - If the performance test passes, the tested HPM can be used in production
- If it fails who is responsible for replacing this pile? Typically, it would be shown as sacrificial pile since it is to verify soil skin friction which is assumed and if it fails then it isn't in the location of a production pile.
    - The Contractor is responsible for a failed pile. The Contractor may elect to install a sacrificial pile if it suits their means and methods.
- Is the stream going to be running between the footings during installation?
    - Yes.
- Helical piles which use grout to flush spoils to surface typically results in grout coming back to the surface to verify the spoils are being cleared which in turn results in grout being all over the jobsite and a high probability of grout entering the body of water versus micropiles which can use multiple drilling fluids to evacuate and control the drill cuttings especially in sensitive environmental conditions. Is it allowable to have grout enter the body of water?
    - No, the Contractor is responsible for controlling their operation and not deposit grout or any other material in the creek.

NOTICE is hereby given that this Addendum must be signed and enclosed with a sealed bid for the Moscow Booster Station Replacements – Phase II, as evidence that the Bidder has familiarized himself/herself with all changes incorporated herein.

NAME OF BIDDER: Razz Construction Inc.

By: Donald A Rasmussen — Signature

3/22/22 — Date

Donald A. Rasmussen — Name

President — Title

Submitted by:

Christopher Pettigrew — Digitally signed by Christopher Pettigrew Date: 2022.03.14 09:23:36-06'00'

J-U-B ENGINEERS, Inc.

Christopher Pettigrew, P.E.

ADDENDUM No. 2

City of Moscow, ID, Sixth Street Crossing over Paradise Creek

March 16, 2022

Addendum No. 2 to the **Sixth Street Crossing over Paradise Creek** Bidding Documents prepared by J-U-B ENGINEERS, Inc. is hereby submitted for use in bid preparation and Submittal.

The following clarifications, corrections, or changes are hereby made as fully and completely as if the same were entirely set forth in the Bidding Documents and shall become an integral part of the contract entered into between Owner and Contractor for this project.

Bid and Contract Documents

Section 6 – Prevailing Wage (Davis Bacon Determination)

- Clarification: The HEAVY Davis-Bacon Wage Determination was updated on March 10, 2022.
- Correction: Replace existing Section 6 with attached Section 6 that includes the updated Determination.

Section 7 – City of Moscow Federally Funded Projects Davis Bacon Labor Standards

- Clarification: The HEAVY Davis-Bacon Wage Determination was updated on March 10, 2022.
- Correction: Replace existing Section 7 with attached Section 7 that includes the updated Determination.

Pre-Bid Meeting

The pre-bid meeting was held at 2:00pm on March 15, and the meeting minutes and sign-in sheet are attached to this addendum. The following questions were asked prior to the meeting or in the meeting and the answers are provided in red.

- The 24" jack and bore casing is really close to the R/W line, and the sending/receiving pits will go beyond the R/W line. Is this the design intent and how will this be handled during construction?
    - The Contractor is responsible for negotiating equipment access and/or staging areas with the landowner for the installation of the casing and waterline. The contract documents assume an open cut; however, the Contractor may use jack and bore if approved by the City and Engineer.

- How much water will be in Paradise Creek during construction?
    - Historical USGS gauge data of Paradise Creek near the University of Idaho shows mean monthly flows from 1978 to 2021 ranging from 22 cfs in March to 0.73 cfs in September. Actual flows may vary.

NOTICE is hereby given that this Addendum must be signed and enclosed with a sealed bid for the Moscow Booster Station Replacements – Phase II, as evidence that the Bidder has familiarized himself/herself with all changes incorporated herein.

NAME OF BIDDER: RAZZ Construction, Inc.

By: Donald A Rasmussen
Signature

3/17/22
Date

Donald A. Rasmussen
Name

President
Title

Submitted by:

Chris Pettigrew Digitally signed by Christopher Pettigrew Date: 2022.03.16 14:58:48-06'00'

J-U-B ENGINEERS, Inc.

Christopher Pettigrew, P.E.

ADDENDUM No. 3

City of Moscow, ID, Sixth Street Crossing over Paradise Creek

March 21, 2022

Addendum No. 3 to the **Sixth Street Crossing over Paradise Creek** Bidding Documents prepared by J-U-B ENGINEERS, Inc. is hereby submitted for use in bid preparation and Submittal.

The following clarifications, corrections, or changes are hereby made as fully and completely as if the same were entirely set forth in the Bidding Documents and shall become an integral part of the contract entered into between Owner and Contractor for this project.

Bid and Contract Documents

Invitation To Bid

- Clarification: The bid date is being extended two weeks to provide time for CIP design.
- Correction: Replace existing bid date *"Tuesday, March 22, 2022"* with the following:
  - *"Tuesday, April 5, 2022"*

Agreement

- Clarification: The substantial completion date is being extended to allow for longer lead times on materials.
- Correction: Replace existing substantial completion date *"August 26, 2022"* with the following:
  - *"October 21, 2022"*

Pre-Bid Meeting

The pre-bid meeting was held at 2:00 pm on March 15, 2022, and the meeting minutes and sign-in sheet were not included in Addendum 02; they are included in this addendum.

Questions

- This is an aggressive design/approval/fabrication/delivery/construction for the precast industry in general, as such is the project construction completion schedule flexible? Could it extend 60 days minimum?
  - The substantial completion date is extended with this addendum.
- The skewed portions of the structure are severe and will require either the structure lengthen to allow for squared ends or the skew portions will require a CIP design. If the structure cannot be extended, could the bid date extend in order for a CIP design of the skewed segments to be provided to the bidders?
  - The structure cannot be lengthened, and the bid date is extended with this addendum.
- Are CIP headwalls an option in addition to the CIP skew pieces for uniformity purposes?
  - CIP headwalls are an option. Shop drawings and calculations for CIP elements will need to be submitted for review by the City and Engineer prior to construction.

NOTICE is hereby given that this Addendum must be signed and enclosed with a sealed bid for the Moscow Booster Station Replacements – Phase II, as evidence that the Bidder has familiarized himself/herself with all changes incorporated herein.

NAME OF BIDDER: RAZZ Construction Inc.

By: Donald A. Rasmussen 3/21/22

Signature Date

Donald A. Rasmussen President.

Name Title

Submitted by:

Digitally signed by Christopher Pettigrew
Date: 2022.03.21 12:29:42-06'00'

J-U-B ENGINEERS, Inc.

Christopher Pettigrew, P.E.

ADDENDUM No. 4

City of Moscow, ID, Sixth Street Crossing over Paradise Creek

April 4, 2022

Addendum No. 4 to the **Sixth Street Crossing over Paradise Creek** Bidding Documents prepared by J-U-B ENGINEERS, Inc. is hereby submitted for use in bid preparation and Submittal.

The following clarifications, corrections, or changes are hereby made as fully and completely as if the same were entirely set forth in the Bidding Documents and shall become an integral part of the contract entered into between Owner and Contractor for this project.

Bid and Contract Documents

Invitation To Bid

- Clarification: The bid date is being extended to provide time for CIP design.
- Correction: Replace existing bid date *"Tuesday, April 5, 2022"* with the following:
  - *"Friday, April 15, 2022"*

Plans

- Example plans for the cast-in-place portions of the structure are included with this addendum for bidding purposes. Final plans and calculations specific to the Sixth Street Bridge will be submitted by the Contractor after award and before structure construction begins.

Questions

- N/A

NOTICE is hereby given that this Addendum must be signed and enclosed with a sealed bid for the Sixth Street Crossing over Paradise Creek, as evidence that the Bidder has familiarized himself/herself with all changes incorporated herein.

NAME OF BIDDER: RAZZ Construction, Inc

By: Donald A Rasmussen — Signature

4/15/22 — Date

Donald A. Rasmussen — Name

President — Title

Submitted by:

Christopher Pettigrew Digitally signed by Christopher Pettigrew Date: 2022.04.04 13:23:46-06'00'

J-U-B ENGINEERS, Inc.
Christopher Pettigrew, P.E.

D. Bidder has not engaged in corrupt, fraudulent, collusive, or coercive practices in competing for the Contract. For the purposes of this Paragraph 4.01.D:

1. "corrupt practice" means the offering, giving, receiving, or soliciting of anything of value likely to influence the action of a public official in the bidding process;

2. "fraudulent practice" means an intentional misrepresentation of facts made (a) to influence the bidding process to the detriment of Owner, (b) to establish bid prices at artificial non-competitive levels, or (c) to deprive Owner of the benefits of free and open competition;

3. "collusive practice" means a scheme or arrangement between two or more Bidders, with or without the knowledge of Owner, a purpose of which is to establish bid prices at artificial, non-competitive levels; and

4. "coercive practice" means harming or threatening to harm, directly or indirectly, persons or their property to influence their participation in the bidding process or affect the execution of the Contract.

ARTICLE 5 – BASIS OF BID

5.01 Bidder will complete the Work in accordance with the Contract Documents for the following price(s):

A. Bid prices listed shall include all applicable taxes and fees.

BASE BID – SIXTH STREET CROSSING OVER PARADISE CREEK

Item No.	Item Description	Estimated Quantity	Unit	Unit Price	Total Price
1	CLEARING AND GRUBBING	0.14	AC	$ 60,000.00	$ 8,400.00
2	REMOVAL OF OBSTRUCTIONS	1	LS	$ 10,000.00	$ 10,000.00
3	REMOVAL OF BITUMINOUS SURFACE	715	SY	$ 10.00	$ 7,150.00
4	EXCAVATION	558	CY	$ 30.00	$ 16,740.00
5	UNSUITABLE MATERIAL EXCAVATION	100	CY	$ 100.00	$ 10,000.00
6	DUST ABATEMENT WATER	100	MG	$ 115.00	$ 11,500.00
7	SEEDBED PREPARATION	0.05	AC	$ 53,000.00	$ 2,650.00
8	SEEDING	0.05	AC	$ 22,300.00	$ 1,115.00
9	MULCHING	0.05	AC	$ 22,300.00	$ 1,115.00
10	LOOSE RIPRAP	220	CY	$ 79.00	$ 17,380.00
11	12" STORM DRAIN PIPE, CLASS C-900 PVC	157	LF	$ 133.00	$ 20,881.00
12	STORM DRAIN MANHOLE - TYPE A	2	EA	$ 4,800.00	$ 9,600.00
13	CATCH BASIN - TYPE I	2	EA	$ 2,800.00	$ 5,600.00

14	6 INCH VERTICAL CURB (NO GUTTER), TYPE "A"	143	LF	$ 72.00	$ 10,296.00
15	STANDARD 6 INCH VERTICAL CURB AND GUTTER	314	LF	$ 78.00	$ 24,492.00
16	CONCRETE SIDEWALKS, THICKNESS 5"	287	SY	$ 101.00	$ 28,987.00
17	CONCRETE DRIVEWAY APPROACH (6" THICK)	25	SY	$ 200.00	$ 5,000.00
18	CRUSHED AGGREGATE FOR BASE TYPE I	436	TON	$ 37.00	$ 16,132.00
19	CRUSHED AGGREGATE FOR BASE TYPE II	580	TON	$ 31.00	$ 17,980.00
20	DILUTED EMULSIFIED ASPHALT FOR TACK COAT	30	GAL	$ 19.00	$ 570.00
21	PLANT MIX PAVEMENT	225	TON	$ 205.00	$ 46,125.00
22	STABILIZED CONSTRUCTION ENTRANCE	2	EA	$ 2,500.00	$ 5,000.00
23	STRAW BALES	100	LF	$ 10.00	$ 1,000.00
24	SILT FENCE	250	LF	$ 7.00	$ 1,750.00
25	TRAFFIC CONTROL SIGNS, CLASS B	262	SF	$ 30.00	$ 7,860.00
26	TRAFFIC CONTROL BARRICADES, TYPE III	4	EA	$ 250.00	$ 1,000.00
27	TRAFFIC CONTROL MAINTENANCE	120	MH	$ 72.00	$ 8,640.00
28	RIPRAP/EROSION CONTROL GEOTEXTILE	192	SY	$ 6.00	$ 1,152.00
29	SUBGRADE SEPARATION GEOTEXTILE	1397	SY	$ 3.00	$ 4,191.00
30	CONTRACTOR FURNISHED CONSTRUCTION SURVEYING AND STAKING	1	LS	$ 20,000.00	$ 20,000.00
31	REMOVAL OF EXISTING WATER MAIN - SIZE 8"	384	LF	$ 35.00	$ 13,440.00
32	REMOVAL OF EXISTING WATER MAIN - SIZE 24"	163	LF	$ 63.00	$ 10,269.00
33	REMOVAL OF EXISTING HYDRANT	3	EA	$ 1,200.00	$ 3,600.00
34	MISC. SURFACE RESTORATION (NATURAL GROUND)	443	LF	$ 7.00	$ 3,101.00
35	STEEL CASING SLEEVE - SIZE 18" (0.375" THICK)	20	LF	$ 300.00	$ 6,000.00

36	STEEL CASING SLEEVE - SIZE 36" (0.375" THICK)	40	LF	$ 500.00	$ 20,000.00
37	WATER MAIN PIPE - SIZE 10" - TYPE C900, CLASS 235 PVC (DR18)	384	LF	$ 230.00	$ 88,320.00
38	WATER MAIN PIPE - SIZE 24" - TYPE C900, CLASS 235 PVC (DR18)	179	LF	$ 580.00	$ 103,820.00
39	CONNECT TO EXISTING WATER MAIN	4	EA	$ 4,700.00	$ 18,800.00
40	GATE VALVE - SIZE 10"	3	EA	$ 3,600.00	$ 10,800.00
41	HYDRANT	2	EA	$ 12,000.00	$ 24,000.00
42	AIR RELEASE VALVE ASSEMBLY	3	EA	$ 6,100.00	$ 18,300.00
43	REMOVAL OF CULVERTS	3	EA	$ 500.00	$ 1,500.00
44	BORROW	150	CY	$ 55.00	$ 8,250.00
45	STRUCTURAL EXCAVATION SCHEDULE 1	400	CY	$ 110.00	$ 44,000.00
46	COMPACTING BACKFILL	350	CY	$ 26.00	$ 9,100.00
47	DEWATERING	1	LS	$ 50,000.00	$ 50,000.00
48	REINFORCING STEEL	42480	LB	$ 3.25	$ 138,060.00
49	CONCRETE (CAST-IN-PLACE) - CLASS 4000A	83	CY	$ 800.00	$ 66,400.00
50	BRIDGE - 24' SPAN X 11' RISE	1	LS	$ 467,500.00	$ 467,500.00
51	HELICAL PULLDOWN MICROPILE (HPM)	79	EA	$ 4,350.00	$ 343,650.00
52	PEDESTRIAN/BICYCLE AND TRAFFIC RAILING	135	LF	$ 200.00	$ 27,000.00
53	MOBILIZATION	1	LS	$ 199,000	$ 199,000.00

BASE BID TOTAL PRICE ONE MILLION NINE HUNDRED NINETY-SEVEN THOUSAND TWO HUNDRED SIXTEEN AND 00
(use words)

ARTICLE 6 – TIME OF COMPLETION

6.01 Bidder agrees that the Work will be substantially complete and will be completed and ready for final payment in accordance with Paragraph 14.07 of the General Conditions on or before the dates or within the number of calendar days indicated in the Agreement.

6.02 Bidder accepts the provisions of the Agreement as to liquidated damages.

6.03 Bidder agrees to comply with Idaho Code 44-1001 through 44-1005, regarding employment of Idaho residents.

ARTICLE 7 – ATTACHMENTS TO THIS BID

7.01 The following documents are submitted with and made a condition of this Bid:

A. Required Bid security in accordance with Article 8 of the Instructions to Bidders;

B. Not used;

C. Bidder shall include in his Bid the name, or names and address, or addresses, and Idaho Public Works Contractor License Numbers of the Subcontractors who shall, in the event the Bidder secures the Contract, subcontract the plumbing, heating and air-conditioning work, and electrical work under the general Contract;

D. Contractor's Non-Collusion Affidavit;

E. Anti-Discrimination Affidavit;

F. Bidder's State of Idaho Public Works Contractor's License No.: 005083.

G. U.S. Department of Commerce Economic Development Administration (EDA) Contracting Provisions for Construction Projects

H. EDA Site Sign Specification

I. Notice of Requirement for Affirmative Action to Ensure Equal Employment Opportunity

J. Form CD-215 Certification Regarding Lobbying Lower Tier Covered Transactions

ARTICLE 8 – DEFINED TERMS

8.01 The terms used in this Bid with initial capital letters have the meanings stated in the Instructions to Bidders, the General Conditions, and the Supplementary Conditions.

ARTICLE 9 – BID SUBMITTAL

9.01 This Bid is submitted by:

If Bidder is:

An Individual

Name (typed or printed): N/A

By: _____
(Individual's signature)

Doing business as: _____

A Partnership

Partnership Name: N/A

By: _____
(Signature of general partner -- attach evidence of authority to sign)

Name (typed or printed): _____

Date of Qualification to do business in Idaho is ___/___/___

A Corporation

Corporation Name: RAZZ Construction, Inc (SEAL)

RAZZ CONSTRUCTION INC CORPORATE SEAL 05/2005 WASHINGTON

State of Incorporation: Washinston

Type (General Business, Professional, Service, Limited Liability): General

By: Donald A Rasmussen
(Signature -- attach evidence of authority to sign) – see attached.

Name (typed or printed): Donald A. Rasmussen.

Title: President
(CORPORATE SEAL)

Attest Michelle Bites – Michelle Bites - Contract Administrator

Date of Qualification to do business in Idaho is 3 / 1 / 10.

A Joint Venture

Name of Joint Venture: N/A

First Joint Venturer Name: _____ (SEAL)

By: _____
(Signature of first joint venture partner -- attach evidence of authority to sign)

Name (typed or printed): _____

Title: _____

Date of Qualification to do business in Idaho is ___/___/___.

Second Joint Venturer Name: _____(SEAL)

By: _____
(Signature of second joint venture partner -- attach evidence of authority to sign)

Name (typed or printed): _____

Title: _____

Date of Qualification to do business in Idaho is ____/____/____.

(Each joint venturer must sign. The manner of signing for each individual, partnership, and corporation that is a party to the joint venture should be in the manner indicated above.)

Bidder's Business Address 4055 Hammer Drive
Bellingham, WA 98226.

Phone No. 360-752-0011 ext 102 Fax No. 360-752-0099

E-mail donr@razzconstruction.com

SUBMITTED on 3/22, 2022.

Idaho Public Works Contractor License No. 005083.

Authority to Sign
Pg. 1 of 2

CORPORATE AUTHORIZATION RESOLUTION

Banner Bank

By: Razz Construction Inc
4055 Hammer Dr
Bellingham WA 98226

Referred to in this document as "Financial Institution"

Referred to in this document as "Corporation"

I, Donald Rasmussen, certify that I am Secretary (clerk) of the above named corporation organized under the laws of Washington, Federal Employer I.D. Number 20-2868526, engaged in business under the trade name of Razz Construction Inc, and that the resolutions on this document are a correct copy of the resolutions adopted at a meeting of the Board of Directors of the Corporation duly and properly called and held on _____ (date). These resolutions appear in the minutes of this meeting and have not been rescinded or modified.

AGENTS Any Agent listed below, subject to any written limitations, is authorized to exercise the powers granted as indicated below:

	Name and Title or Position	Signature	Facsimile Signature (if used)
A.	Donald Rasmussen	X Donald A. Rasmussen	N/A
B.	Karen Rasmussen	X Karen S. Rasmussen	X N/A
C.		X	X
D.		X	X
E.		X	X
F.		X	X

POWERS GRANTED (Attach one or more Agents to each power by placing the letter corresponding to their name in the area before each power. Following each power indicate the number of Agent signatures required to exercise the power.)

Indicate A, B, C, D, E, and/or F		Description of Power	Indicate number of signatures required
N/A	(1)	Exercise all of the powers listed in this resolution.	N/A
	(2)	Open any deposit or share account(s) in the name of the Corporation.	
	(3)	Endorse checks and orders for the payment of money or otherwise withdraw or transfer funds on deposit with this Financial Institution.	
N/A	(4)	Borrow money on behalf and in the name of the Corporation, sign, execute and deliver promissory notes or other evidences of indebtedness.	N/A
N/A	(5)	Endorse, assign, transfer, mortgage or pledge bills receivable, warehouse receipts, bills of lading, stocks, bonds, real estate or other property now owned or hereafter owned or acquired by the Corporation as security for sums borrowed, and to discount the same, unconditionally guarantee payment of all bills received, negotiated or discounted and to waive demand, presentment, protest, notice of protest and notice of non-payment.	N/A
N/A	(6)	Enter into a written lease for the purpose of renting, maintaining, accessing and terminating a Safe Deposit Box in this Financial Institution.	N/A
A	(7)	Other The Corporation designates this single agent as their Customer Administrator with full rights and authorities as described in Banner Bank's Online Cash Managment Agreement.	N/A

LIMITATIONS ON POWERS The following are the Corporation's express limitations on the powers granted under this resolution.

EFFECT ON PREVIOUS RESOLUTIONS This resolution supersedes resolution dated _____. If not completed, all resolutions remain in effect.

CERTIFICATION OF AUTHORITY
I further certify that the Board of Directors of the Corporation has, and at the time of adoption of this resolution had, full power and lawful authority to adopt the resolutions on page 2 and to confer the powers granted above to the persons named who have full power and lawful authority to exercise the same. (Apply seal below where appropriate.)

☐ If checked, the Corporation is a non-profit corporation.

In Witness Whereof, I have subscribed my name to this document and affixed the seal of the Corporation on October 13, 2010 (date).

Donald A Rasmussen — Attest by One Other Officer

Donald A Rasmussen — Secretary

Experts © 1985, 1997 Bankers Systems, Inc., St. Cloud, MN Form CA-1 5/1/2003

Construction Inc

Authority to sign
pg 2 of 2

Statement of Appointment- C.E.O. for RAZZ Construction, Inc.

On the date of Incorporation of RAZZ Construction, Inc., Donald A. Rasmussen was elected as Chief Executive Officer for the company. This appointment is detailed in the By-Laws of RAZZ Construction, Inc.

Signed: Donald A. Rasmussen
Donald A. Rasmussen- President

Date: May 19, 2005

4055 Hammer Drive Bellingham, WA 98226-7665
Ph: (360) 752-0011 Fx: (360) 752-0099 Email: donaldrazz@qwest.net

Brad Little
Governor

State of Idaho

Division of Building Safety

PUBLIC WORKS CONTRACTORS LICENSING

CONTRACTOR

005083 - UNLIMITED - 1- 2
License Number

03/01/2010
Original License Issued

This is to certify that

RAZZ CONSTRUCTION, INC.

has fulfilled the requirements of the law relating to licensing in Idaho Code, Title 54, Chapter 19 & 45 and is hereby granted this certificate.

This license expires: 03/31/2023

Licensee Signature

Ron Whitney, Administrator

Contractor's Non-Collusion Affidavit

State of Washington
) SS
County of Whatcom

Bid for Razz Construction, Inc, being first duly sworn, deposes, and says that he/she is President [sole owner, a partner, president, secretary, etc.] of, Razz Construction, Inc. [Bidder], the party making the foregoing Bid; that such Bid is not made in the interest of or on behalf of any undisclosed person, partnership, company, association, organization or corporation; that such Bid is genuine and not collusive or sham; that said Bidder has not directly or indirectly induced or solicited any other Bidder to put in a false or sham Bid and has not directly or indirectly colluded, conspired, connived or agreed with any Bidder or anyone else to put in a sham Bid, nor that anyone shall refrain from bidding; that said Bidder has not in any manner, directly or indirectly, sought by agreement, communication or conference with anyone to fix the Bid Price of said Bidder or of any other Bidder, nor to fix any overhead, profit or cost element of such Bid Price, nor of that of any other Bidder, nor to secure any advantage against the public body awarding the Contract or anyone interested in the proposed Contract; that all statements contained in such Bid are true; and, further, that said Bidder has not directly or indirectly submitted his Bid Price or any breakdown thereof, nor the contents thereof, nor divulged information or data relative thereto, nor paid and will not pay any fee in connection therewith to any corporation, partnership, company, association, organization, bid depository, nor to any member or agent thereof, nor to any other individual except to such person(s) as has/have a partnership or other financial interest with said Bidder in his general business.

Signed: Donald A. Rasmussen
Donald A. Rasmussen.

Title: President

Subscribed and sworn to before me this 22 day of March, 2022

YVETTE S MURPHY
MY COMM. EXP. 06/20/2023
NOTARY PUBLIC
COMM. NO. 34528
STATE OF WASHINGTON

(SEAL)

Notary Public Yvette S. Murphy
State of Washington
My Commission Expires 6/20/2023

THIS PAGE WAS INTENTIONALLY LEFT BLANK

Anti-Discrimination Affidavit

STATE OF WA ;

COUNTY OF Whatcom;

The Bidder hereby covenants, stipulates and agrees that no person shall be discriminated against in the bidding of the services and/or materials herein under and that the Bidder shall not refuse to hire any person therefore because of such person's race, creed, sex, color, or national origin, unless based on a bona fide occupational qualification. Also, the Bidder will in no manner discriminate against any person because of such person's race, creed, sex, color, or national origin. Any such discrimination shall be deemed a violation of this Bid and shall render this Bid subject to forfeiture.

Donald A Rasmussen

Contractor's Signature Donald A. Rasmussen - President.

Subscribed and sworn to before me this 22 day of March, 2022.

Yvette S. Murphy

Notary Public

State of Washington

Residing at Bellingham, WA. 98221

My Commission Expires 6/20/2023

YVETTE S MURPHY
MY COMM. EXP. 06/20/2023
NOTARY PUBLIC
COMM. NO. 34528
STATE OF WASHINGTON

THIS PAGE WAS INTENTIONALLY LEFT BLANK

BID BOND

Any singular reference to Bidder, Surety, Owner or other party shall be considered plural where applicable.

BIDDER *(Name and Address)*:
Razz Construction, Inc.
4055 Hammer Drive
Bellingham, WA 98226

SURETY *(Name and Address of Principal Place of Business)*:
Old Republic Surety Company
P.O. BOX 1635,
MILWAUKEE, WI 53201

OWNER *(Name and Address)*:
City of Moscow
206 E Third Street
Moscow, ID 83843

BID
Bid Due Date: April 5, 2022
Description *(Project Name and Include Location)*: Sixth Street Crossing Over Paradise Creek

BOND
Bond Number: CSBA-20366
Date *(Not earlier than Bid due date)*:
Penal sum Five Percent of Amount Bid $ 5%
(Written in Words) (Figures)

Surety and Bidder, intending to be legally bound hereby, subject to the terms set forth below, do each cause this Bid Bond to be duly executed by an authorized officer, agent, or representative.

Signed, Sealed and Dated: March 30, 2022

BIDDER	**SURETY**
Razz Construction, Inc. (Seal)	Old Republic Surety Company (Seal)
Bidder's Name and Corporate Seal	Surety's Name and Corporate Seal
By: Donald A Rasmussen	By:
Signature	Signature (Attach Power of Attorney)
Donald A. Rasmussen	Daniel Huckabay
Print Name	Print Name
President	Attorney-in-Fact
Title	Title
Attest: Michelle Butler	Attest:
Signature	Signature
Contract Administrator	
Title	Title

RAZZ CONSTRUCTION INC CORPORATE SEAL 05/2005 WASHINGTON

Note: Above addresses are to be used for giving any required notice. Provide execution by any additional parties, such as joint venturers, if necessary.

1. Bidder and Surety, jointly and severally, bind themselves, their heirs, executors, administrators, successors, and assigns to pay to Owner upon default of Bidder the penal sum set forth on the face of this Bond. Payment of the penal sum is the extent of Bidder's and Surety's liability. Recovery of such penal sum under the terms of this Bond shall be Owner's sole and exclusive remedy upon default of Bidder.

2. Default of Bidder shall occur upon the failure of Bidder to deliver within the time required by the Bidding Documents (or any extension thereof agreed to in writing by Owner) the executed Agreement required by the Bidding Documents and any performance and payment bonds required by the Bidding Documents.

3. This obligation shall be null and void if:

3.1 Owner accepts Bidder's Bid and Bidder delivers within the time required by the Bidding Documents (or any extension thereof agreed to in writing by Owner) the executed Agreement required by the Bidding Documents and any performance and payment bonds required by the Bidding Documents, or

3.2 All Bids are rejected by Owner, or

3.3 Owner fails to issue a Notice of Award to Bidder within the time specified in the Bidding Documents (or any extension thereof agreed to in writing by Bidder and, if applicable, consented to by Surety when required by Paragraph 5 hereof).

4. Payment under this Bond will be due and payable upon default of Bidder and within 30 calendar days after receipt by Bidder and Surety of written notice of default from Owner, which notice will be given with reasonable promptness, identifying this Bond and the Project and including a statement of the amount due.

5. Surety waives notice of any and all defenses based on or arising out of any time extension to issue Notice of Award agreed to in writing by Owner and Bidder, provided that the total time for issuing Notice of Award including extensions shall not in the aggregate exceed 120 days from Bid due date without Surety's written consent.

6. No suit or action shall be commenced under this Bond prior to 30 calendar days after the notice of default required in Paragraph 4 above is received by Bidder and Surety and in no case later than one year after Bid due date.

7. Any suit or action under this Bond shall be commenced only in a court of competent jurisdiction located in the state in which the Project is located.

8. Notices required hereunder shall be in writing and sent to Bidder and Surety at their respective addresses shown on the face of this Bond. Such notices may be sent by personal delivery, commercial courier, or by United States Registered or Certified Mail, return receipt requested, postage pre-paid, and shall be deemed to be effective upon receipt by the party concerned.

9. Surety shall cause to be attached to this Bond a current and effective Power of Attorney evidencing the authority of the officer, agent, or representative who executed this Bond on behalf of Surety to execute, seal, and deliver such Bond and bind the Surety thereby.

10. This Bond is intended to conform to all applicable statutory requirements. Any applicable requirement of any applicable statute that has been omitted from this Bond shall be deemed to be included herein as if set forth at length. If any provision of this Bond conflicts with any applicable statute, then the provision of said statute shall govern and the remainder of this Bond that is not in conflict therewith shall continue in full force and effect.

11. The term "Bid" as used herein includes a Bid, offer, or proposal as applicable.

ACKNOWLEDGMENT

A notary public or other officer completing this certificate verifies only the identity of the individual who signed the document to which this certificate is attached, and not the truthfulness, accuracy, or validity of that document.

State of California
County of Orange)

On March 30th, 2022 before me, Melissa Ann Vaccaro, Notary Public
(insert name and title of the officer)

personally appeared Daniel Huckabay,
who proved to me on the basis of satisfactory evidence to be the person(s) whose name(s) is/are subscribed to the within instrument and acknowledged to me that he/she/they executed the same in his/her/their authorized capacity(ies), and that by his/her/their signature(s) on the instrument the person(s), or the entity upon behalf of which the person(s) acted, executed the instrument.

I certify under PENALTY OF PERJURY under the laws of the State of California that the foregoing paragraph is true and correct.

WITNESS my hand and official seal.

MELISSA ANN VACCARO
COMM. #2241394
Notary Public-California
ORANGE COUNTY
My Comm. Expires May 12, 2022
FRS3

Signature Melissa Ann Vaccaro (Seal)
Melissa Ann Vaccaro

OLD REPUBLIC SURETY COMPANY

Bond No. CSBA-20366

POWER OF ATTORNEY

KNOW ALL MEN BY THESE PRESENTS: That OLD REPUBLIC SURETY COMPANY, a Wisconsin stock insurance corporation, does make, constitute and appoint:

Daniel Huckabay, Arturo Ayala, Shaunna Rozelle Ostrom, Frank Morones,

Michael D. Stong, Ben Stong of Orange, CA

its true and lawful Attorney(s)-in-Fact, with full power and authority for and on behalf of the company as surety, to execute and deliver and affix the seal of the company thereto (if a seal is required), bonds, undertakings, recognizances or other written obligations in the nature thereof, ***(other than bail bonds, bank depository bonds, mortgage deficiency bonds, mortgage guaranty bonds, guarantees of installment paper and note guaranty bonds, self-insurance workers compensation bonds guaranteeing payment of benefits, asbestos abatement contract bonds, waste management bonds, hazardous waste remediation bonds or black lung bonds),*** as follows:

ALL WRITTEN INSTRUMENTS

and to bind OLD REPUBLIC SURETY COMPANY thereby, and all of the acts of said Attorneys-in-Fact, pursuant to these presents, are ratified and confirmed. This appointment is made under and by authority of the board of directors at a special meeting held on February 18, 1982.

This Power of Attorney is signed and sealed by facsimile under and by the authority of the following resolutions adopted by the board of directors of the OLD REPUBLIC SURETY COMPANY on February 18,1982.

RESOLVED that, the president, any vice-president or assistant vice president, in conjunction with the secretary or any assistant secretary, may appoint attorneys-in-fact or agents with authority as defined or limited in the instrument evidencing the appointment in each case, for and on behalf of the company to execute and deliver and affix the seal of the company to bonds, undertakings, recognizances, and suretyship obligations of all kinds; and said officers may remove any such attorney-in-fact or agent and revoke any Power of Attorney previously granted to such person.

RESOLVED FURTHER, that any bond, undertaking, recognizance, or suretyship obligation shall be valid and binding upon the Company

(i) when signed by the president, any vice president or assistant vice president, and attested and sealed (if a seal be required) by any secretary or assistant secretary; or

(ii) when signed by the president, any vice president or assistant vice president, secretary or assistant secretary, and countersigned and sealed (if a seal be required) by a duly authorized attorney-in-fact or agent; or

(iii) when duly executed and sealed (if a seal be required) by one or more attorneys-in-fact or agents pursuant to and within the limits of the authority evidenced by the Power of Attorney issued by the company to such person or persons.

RESOLVED FURTHER that the signature of any authorized officer and the seal of the company may be affixed by facsimile to any Power of Attorney or certification thereof authorizing the execution and delivery of any bond, undertaking, recognizance, or other suretyship obligations of the company; and such signature and seal when so used shall have the same force and effect as though manually affixed.

IN WITNESS WHEREOF, OLD REPUBLIC SURETY COMPANY has caused these presents to be signed by its proper officer, and its corporate seal to be affixed this 13th day of May, 2020.

OLD REPUBLIC SURETY COMPANY

Karen J. Haffner
Assistant Secretary

President

STATE OF WISCONSIN, COUNTY OF WAUKESHA - SS

On this 13th day of May, 2020, personally came before me, Alan Pavlic and Karen J Haffner, to me known to be the individuals and officers of the OLD REPUBLIC SURETY COMPANY who executed the above instrument, and they each acknowledged the execution of the same, and being by me duly sworn, did severally depose and say: that they are the said officers of the corporation aforesaid, and that the seal affixed to the above instrument is the seal of the corporation, and that said corporate seal and their signatures as such officers were duly affixed and subscribed to the said instrument by the authority of the board of directors of said corporation.

Kathryn R. Pearson
Notary Public

My Commission Expires: September 28, 2022

(Expiration of notary's commission does not invalidate this instrument)

CERTIFICATE

I, the undersigned, assistant secretary of the OLD REPUBLIC SURETY COMPANY, a Wisconsin corporation, CERTIFY that the foregoing and attached Power of Attorney remains in full force and has not been revoked; and furthermore, that the Resolutions of the board of directors set forth in the Power of Attorney, are now in force.

74 7242

Signed and sealed at the City of Brookfield, WI this 30th day of March, 2022.

Karen J. Haffner
Assistant Secretary

ORSC 22262 (3-06)

CSBA

Naming of Subcontractors Form

Per Idaho Code, 67-2310, Bidder shall include in his or her Bid the names and address, and Idaho Public Works Contractor License Number of the Subcontractors who shall, in the event the Bidder secures the Contract, subcontract the plumbing, heating and air-conditioning work, and electrical work under the general Contract. Failure to name Subcontractors as required shall render any Bid submitted by the Bidder unresponsive and void.

Subcontractor Name and Address	Classification	License Number
NONE	PLUMBING	N/A
NONE	HVAC	N.A.
NONE	ELECTRICAL	N.A.

NOTES TO USER

1. This form must be included for all bids.

THIS PAGE WAS INTENTIONALLY LEFT BLANK

ADDENDUM No. 1

City of Moscow, ID, Sixth Street Crossing over Paradise Creek

March 14, 2022

Addendum No. 1 to the **Sixth Street Crossing over Paradise Creek** Bidding Documents prepared by J-U-B ENGINEERS, Inc. is hereby submitted for use in bid preparation and Submittal.

The following clarifications, corrections, or changes are hereby made as fully and completely as if the same were entirely set forth in the Bidding Documents and shall become an integral part of the contract entered into between Owner and Contractor for this project.

Questions

- Specification SP-3002 1.4A.4 and 5 reference DFI's guide to a micropile specification and the PTI. This project has helical piles detailed on the plan sheets and neither of these guides are applicable for helical piles as the DFI micropile specification guide was written for micropile specifications. Helical piles are not micropiles and there is a clear difference between the two foundation elements. The Post Tensioning Institute (PTI) guide was written for post-tensioned anchors such as tiebacks but also applies to micropiles but does not apply to helical piles especially when determining a skin friction. Both references were written for an anchor or pile that is drilled into the ground not twisted. A tieback or micropile is drilled down while all the of spoils are moved typically using air. Helical piles mix the grout in place with existing materials which results in a significantly reduced grout strength which will have a huge impact on the pile skin friction. Please update reference code materials or specify micropiles instead of helical piles.
    - References to DFI and PTI can be deleted.
- Is it acceptable to use micropiles in lieu of helical piles on this project?
    - Yes, although an alternate design would have to be stamped by an Idaho Licensed Engineer and submitted to the City/JUB for review and approval.
- Are the pile loads in compression or tension?
    - Piles will remain in compression.
- Plan Sheet S-102 details a maximum applied axial load of 72.1 kips. Is this the actual load that each pile should be designed for? Is this an LRFD or ASD load?
    - 72.1 kips is the demand. The required nominal strength is 150 kips per pile.
- What is the allowable deflection at design load? Typically, in the micropile industry this is limited to 0.5 inches at design load.
    - Use the design load as the nominal load, i.e. max 0.5-inch vertical deflection due to nominal load of 150 kips per pile.
- Please confirm there are no lateral loads in the piles.
    - There are lateral loads; however, once the culvert structure is in place, some of the loads will transmit through the top slab of the culvert into the fill material on the other side of the creek. The lateral load will be resisted by the battered piles. Lateral loads are relatively small.
- Is it allowable to perform the performance axial load test in tension as it is more conservative due to Poisson's ratio?
    - The compression load test is specified to replicate the load conditions that will be applied to the piles in service. Depending on the installation conditions, tension load testing may not accurately represent the performance of the HPMs.

- Does the helical pile design account for a steel section loss of 1/16" per International Building Code recommendation?
    - HPM components that are not completely encased in grout, are to have galvanized coating to protect against corrosion.
- Who is responsible for the design of the helical piles or micropiles?
    - The HPM design is included in the geotechnical deliverable. Any alternative designs would be provided by the Contractor.
- Who is responsible for piles which fail performance or proof tests?
    - The Contractor is responsible for failed piles.
- Is there any proof testing required for this project? Performance testing is used to verify the ultimate skin friction can be obtained and verified. Proof tests are used to ensure construction installation is consistent.
    - No proof tests are required. The specification requires 1 performance test in compression on a production HPM.
- Can the performance test be performed on a production pile or is it sacrificial?
    - If the performance test passes, the tested HPM can be used in production
- If it fails who is responsible for replacing this pile? Typically, it would be shown as sacrificial pile since it is to verify soil skin friction which is assumed and if it fails then it isn't in the location of a production pile.
    - The Contractor is responsible for a failed pile. The Contractor may elect to install a sacrificial pile if it suits their means and methods.
- Is the stream going to be running between the footings during installation?
    - Yes.
- Helical piles which use grout to flush spoils to surface typically results in grout coming back to the surface to verify the spoils are being cleared which in turn results in grout being all over the jobsite and a high probability of grout entering the body of water versus micropiles which can use multiple drilling fluids to evacuate and control the drill cuttings especially in sensitive environmental conditions. Is it allowable to have grout enter the body of water?
    - No, the Contractor is responsible for controlling their operation and not deposit grout or any other material in the creek.

NOTICE is hereby given that this Addendum must be signed and enclosed with a sealed bid for the Moscow Booster Station Replacements – Phase II, as evidence that the Bidder has familiarized himself/herself with all changes incorporated herein.

NAME OF BIDDER: _____

By:

_____ _____

Signature Date

_____ _____

Name Title

Submitted by:

J-U-B ENGINEERS, Inc.
Christopher Pettigrew, P.E.

ADDENDUM No. 2

City of Moscow, ID, Sixth Street Crossing over Paradise Creek

March 16, 2022

Addendum No. 2 to the **Sixth Street Crossing over Paradise Creek** Bidding Documents prepared by J-U-B ENGINEERS, Inc. is hereby submitted for use in bid preparation and Submittal.

The following clarifications, corrections, or changes are hereby made as fully and completely as if the same were entirely set forth in the Bidding Documents and shall become an integral part of the contract entered into between Owner and Contractor for this project.

Bid and Contract Documents

Section 6 – Prevailing Wage (Davis Bacon Determination)

- Clarification: The HEAVY Davis-Bacon Wage Determination was updated on March 10, 2022.
- Correction: Replace existing Section 6 with attached Section 6 that includes the updated Determination.

Section 7 – City of Moscow Federally Funded Projects Davis Bacon Labor Standards

- Clarification: The HEAVY Davis-Bacon Wage Determination was updated on March 10, 2022.
- Correction: Replace existing Section 7 with attached Section 7 that includes the updated Determination.

Pre-Bid Meeting

The pre-bid meeting was held at 2:00pm on March 15, and the meeting minutes and sign-in sheet are attached to this addendum. The following questions were asked prior to the meeting or in the meeting and the answers are provided in red.

- The 24" jack and bore casing is really close to the R/W line, and the sending/receiving pits will go beyond the R/W line. Is this the design intent and how will this be handled during construction?
    - The Contractor is responsible for negotiating equipment access and/or staging areas with the landowner for the installation of the casing and waterline. The contract documents assume an open cut; however, the Contractor may use jack and bore if approved by the City and Engineer.

- How much water will be in Paradise Creek during construction?
    - Historical USGS gauge data of Paradise Creek near the University of Idaho shows mean monthly flows from 1978 to 2021 ranging from 22 cfs in March to 0.73 cfs in September. Actual flows may vary.

NOTICE is hereby given that this Addendum must be signed and enclosed with a sealed bid for the Moscow Booster Station Replacements – Phase II, as evidence that the Bidder has familiarized himself/herself with all changes incorporated herein.

NAME OF BIDDER: _____

By:

_____ _____

Signature Date

_____ _____

Name Title

Submitted by:

J-U-B ENGINEERS, Inc.
Christopher Pettigrew, P.E.

City of Moscow
Latah County, Idaho
Sixth Street Crossing Over Paradise Creek

Section 6

Prevailing Wage Determination

THIS PAGE WAS INTENTIONALLY LEFT BLANK

DAVIS BACON WAGE DECISION

The following Davis Bacon Wage Decision(s) apply to all labor activities performed on this project and are included in this Specification document:

CITY OF MOSCOW
EDA AWARD NO. 07-79-07731
SIXTH STREET BRIDGE REPLACEMENT PROJECT
MOSCOW, IDAHO

General Decision Number: ID2022065 03/11/2022

Superseded General Decision Number: ID20210065

State: Idaho

Construction Type: Heavy

Counties: Benewah, Clearwater, and Latah Counties in Idaho

General Decision Number: ID20220082 02/25/2022

Superseded General Decision Number: ID20210082

State: Idaho

Construction Type: Highway

Counties: Latah County in Idaho

"General Decision Number: ID20220065 03/11/2022

Superseded General Decision Number: ID20210065

State: Idaho

Construction Type: Heavy
HEAVY CONSTRUCTION, Including water and sewer line construction and heavy construction projects on treatment plants and industrial (power plants, manufacturing plants, processing plants, etc.) sites

Counties: Benewah, Clearwater and Latah Counties in Idaho.

Note: Contracts subject to the Davis-Bacon Act are generally required to pay at least the applicable minimum wage rate required under Executive Order 14026 or Executive Order 13658. Please note that these Executive Orders apply to covered contracts entered into by the federal government that are subject to the Davis-Bacon Act itself, but do not apply to contracts subject only to the Davis-Bacon Related Acts, including those set forth at 29 CFR 5.1(a)(2)-(60).

If the contract is entered into on or after January 30, 2022, or the contract is renewed or extended (e.g., an option is exercised) on or after January 30, 2022:	. Executive Order 14026 generally applies to the contract. . The contractor must pay all covered workers at least $15.00 per hour (or the applicable wage rate listed on this wage determination, if it is higher) for all hours spent performing on the contract in 2022.
If the contract was awarded on or between January 1, 2015 and January 29, 2022, and the contract is not renewed or extended on or after January 30, 2022:	. Executive Order 13658 generally applies to the contract. . The contractor must pay all covered workers at least $11.25 per hour (or the applicable wage rate listed on this wage determination, if it is higher) for all hours spent performing on that contract in 2022.

The applicable Executive Order minimum wage rate will be adjusted annually. If this contract is covered by one of the Executive Orders and a classification considered necessary for performance of work on the contract does not appear on this wage determination, the contractor must still submit a conformance request.

Additional information on contractor requirements and worker protections under the Executive Orders is available at https://www.dol.gov/agencies/whd/government-contracts.

Modification Number	Publication Date
0	01/07/2022
1	02/18/2022
2	02/25/2022
3	03/11/2022

* CARP0001-045 06/01/2021

	Rates	Fringes
CARPENTER (Form Work Only).....	$ 38.87	17.84

ELEC0073-011 01/01/2022

	Rates	Fringes
ELECTRICIAN.....	$ 39.55	19.68

ENGI0370-035 06/01/2018

	Rates	Fringes
POWER EQUIPMENT OPERATOR:		
Backhoe (45,000 gw & under), Cranes (25 tons & under), Drill (8 in bit and over		
GROUP 5.....	$ 28.76	15.95
Backhoe (45,000-110,000 gw), Crane (25-45 tons), Bulldozer (D-6 and over), Grader/Blade, Front-End Loader(4-8 yds), Paver, Scrapers (all)		
GROUP 6.....	$ 29.04	15.95
Backhoe (over 110,000 gw), Cranes (45-85 tons), Heavy Duty Mechanic, Front End Loader (8-10 yds)		
GROUP 7.....	$ 29.31	15.95
Bulldozer (up to D-6)		
GROUP 3.....	$ 28.44	15.95
Cranes (85 tons & over), Front End Loader (10 yds & over)		
GROUP 8.....	$ 30.41	15.95
Front End Loader (under 4 yds)		
GROUP 4.....	$ 28.60	15.95
Rollers (all)		
GROUP 1.....	$ 27.51	15.95

ZONE PAY:

ZONE CENTERS: SPOKANE, PASCO, LEWISTON
ZONE 1: 0-45 Miles: Free
ZONE 2: 45 Miles & Over: $2.00

BOOM PAY (ALL CRANES):

(A): 180'-250': $.50 over scale
(B): over 250': $.80 over scale

IRON0014-006 07/01/2020

	Rates	Fringes
IRONWORKER, REINFORCING AND STRUCTURAL	$ 30.10	34.59

LABO0238-028 06/01/2017

	Rates	Fringes
LABORER (PIPELINE ONLY)		
COMMON	$ 26.28	12.15

LABO0238-031 07/01/2019

	Rates	Fringes
LABORER		
Asphalt Includes Raker, Shoveler, Spreader, and Distributor		
Group 4	$ 28.48	13.00
Flagger		
Group 1A	$ 25.84	13.00

Zone Differential (Add to Zone 1 rates): Zone 2 - $2.00

BASE POINTS: Spokane

Zone 1: 0-45 radius miles from the main post office.
Zone 2: 45 radius miles and over from the main post office

PLAS0072-003 06/01/2021

BENEWAH, BONNER, BOUNDARY, CLEARWATER, IDAHO (NORTH OF THE 46TH PARALLEL), KOOTENAI, LATAH, LEWIS AND NEZ PERCE AND SHOSHONE COUNTIES

ZONE 1:

	Rates	Fringes
CEMENT MASON/CONCRETE FINISHER	$ 32.44	19.56

Zone Differential (Add to Zone 1 rate): Zone 2 - $2.00

BASE POINTS: Spokane, Pasco, Lewiston, Wenatchee

Zone 1: 0-45 radius miles from the main post office

Zone 2: Over 45 radius miles from the main post office

PLUM0044-015 06/01/2019

	Rates	Fringes
PLUMBER		
Zone 1	$ 37.71	23.44

TEAM0690-002 06/01/2020

	Rates	Fringes

TRUCK DRIVER (DUMP)
6 yds and under.....$ 28.79 18.15
over 6 yds.....$ 29.23 18.15

SUID2010-058 08/08/2012

	Rates	Fringes
CARPENTER, Excludes Form Work....	$ 29.92	5.20
LABORER: Common or General.....	$ 23.75	8.98
LABORER: Landscape.....	$ 22.13	11.13
LABORER: Pipelayer.....	$ 17.67	7.26
OPERATOR: Bobcat/Skid Steer/Skid Loader.....	$ 20.97	0.00
OPERATOR: Concrete Batch Plant.....	$ 24.94	11.96
OPERATOR: Forklift.....	$ 21.20	0.00
TRUCK DRIVER: Lowboy Truck.....	$ 21.00	12.10
TRUCK DRIVER: Water Truck.....	$ 24.48	11.67

WELDERS - Receive rate prescribed for craft performing operation to which welding is incidental.

==========

Note: Executive Order (EO) 13706, Establishing Paid Sick Leave for Federal Contractors applies to all contracts subject to the Davis-Bacon Act for which the contract is awarded (and any solicitation was issued) on or after January 1, 2017. If this contract is covered by the EO, the contractor must provide employees with 1 hour of paid sick leave for every 30 hours they work, up to 56 hours of paid sick leave each year. Employees must be permitted to use paid sick leave for their own illness, injury or other health-related needs, including preventive care; to assist a family member (or person who is like family to the employee) who is ill, injured, or has other health-related needs, including preventive care; or for reasons resulting from, or to assist a family member (or person who is like family to the employee) who is a victim of, domestic violence, sexual assault, or stalking. Additional information on contractor requirements and worker protections under the EO is available at
https://www.dol.gov/agencies/whd/government-contracts.

Unlisted classifications needed for work not included within the scope of the classifications listed may be added after award only as provided in the labor standards contract clauses (29CFR 5.5 (a) (1) (ii)).

The body of each wage determination lists the classification and wage rates that have been found to be prevailing for the

cited type(s) of construction in the area covered by the wage determination. The classifications are listed in alphabetical order of ""identifiers"" that indicate whether the particular rate is a union rate (current union negotiated rate for local), a survey rate (weighted average rate) or a union average rate (weighted union average rate).

Union Rate Identifiers

A four letter classification abbreviation identifier enclosed in dotted lines beginning with characters other than ""SU"" or ""UAVG"" denotes that the union classification and rate were prevailing for that classification in the survey. Example: PLUM0198-005 07/01/2014. PLUM is an abbreviation identifier of the union which prevailed in the survey for this classification, which in this example would be Plumbers. 0198 indicates the local union number or district council number where applicable, i.e., Plumbers Local 0198. The next number, 005 in the example, is an internal number used in processing the wage determination. 07/01/2014 is the effective date of the most current negotiated rate, which in this example is July 1, 2014.

Union prevailing wage rates are updated to reflect all rate changes in the collective bargaining agreement (CBA) governing this classification and rate.

Survey Rate Identifiers

Classifications listed under the ""SU"" identifier indicate that no one rate prevailed for this classification in the survey and the published rate is derived by computing a weighted average rate based on all the rates reported in the survey for that classification. As this weighted average rate includes all rates reported in the survey, it may include both union and non-union rates. Example: SULA2012-007 5/13/2014. SU indicates the rates are survey rates based on a weighted average calculation of rates and are not majority rates. LA indicates the State of Louisiana. 2012 is the year of survey on which these classifications and rates are based. The next number, 007 in the example, is an internal number used in producing the wage determination. 5/13/2014 indicates the survey completion date for the classifications and rates under that identifier.

Survey wage rates are not updated and remain in effect until a new survey is conducted.

Union Average Rate Identifiers

Classification(s) listed under the UAVG identifier indicate that no single majority rate prevailed for those classifications; however, 100% of the data reported for the classifications was union data. EXAMPLE: UAVG-OH-0010 08/29/2014. UAVG indicates that the rate is a weighted union average rate. OH indicates the state. The next number, 0010 in the example, is an internal number used in producing the wage determination. 08/29/2014 indicates the survey completion date for the classifications and rates under that identifier.

A UAVG rate will be updated once a year, usually in January of each year, to reflect a weighted average of the current negotiated/CBA rate of the union locals from which the rate is based.

WAGE DETERMINATION APPEALS PROCESS

1.) Has there been an initial decision in the matter? This can be:

* an existing published wage determination
* a survey underlying a wage determination
* a Wage and Hour Division letter setting forth a position on a wage determination matter
* a conformance (additional classification and rate) ruling

On survey related matters, initial contact, including requests for summaries of surveys, should be with the Wage and Hour National Office because National Office has responsibility for the Davis-Bacon survey program. If the response from this initial contact is not satisfactory, then the process described in 2.) and 3.) should be followed.

With regard to any other matter not yet ripe for the formal process described here, initial contact should be with the Branch of Construction Wage Determinations. Write to:

Branch of Construction Wage Determinations
Wage and Hour Division
U.S. Department of Labor
200 Constitution Avenue, N.W.
Washington, DC 20210

2.) If the answer to the question in 1.) is yes, then an interested party (those affected by the action) can request review and reconsideration from the Wage and Hour Administrator (See 29 CFR Part 1.8 and 29 CFR Part 7). Write to:

Wage and Hour Administrator
U.S. Department of Labor
200 Constitution Avenue, N.W.
Washington, DC 20210

The request should be accompanied by a full statement of the interested party's position and by any information (wage payment data, project description, area practice material, etc.) that the requestor considers relevant to the issue.

3.) If the decision of the Administrator is not favorable, an interested party may appeal directly to the Administrative Review Board (formerly the Wage Appeals Board). Write to:

Administrative Review Board
U.S. Department of Labor
200 Constitution Avenue, N.W.
Washington, DC 20210

4.) All decisions by the Administrative Review Board are final.

==========

END OF GENERAL DECISIO"

"General Decision Number: ID20220082 02/25/2022

Superseded General Decision Number: ID20210082

State: Idaho

Construction Type: Highway

County: Latah County in Idaho.

HIGHWAY CONSTRUCTION PROJECTS

Note: Contracts subject to the Davis-Bacon Act are generally required to pay at least the applicable minimum wage rate required under Executive Order 14026 or Executive Order 13658. Please note that these Executive Orders apply to covered contracts entered into by the federal government that are subject to the Davis-Bacon Act itself, but do not apply to contracts subject only to the Davis-Bacon Related Acts, including those set forth at 29 CFR 5.1(a)(2)-(60).

If the contract is entered into on or after January 30, 2022, or the contract is renewed or extended (e.g., an option is exercised) on or after January 30, 2022:	. Executive Order 14026 generally applies to the contract. . The contractor must pay all covered workers at least $15.00 per hour (or the applicable wage rate listed on this wage determination, if it is higher) for all hours spent performing on the contract in 2022.
If the contract was awarded on or between January 1, 2015 and January 29, 2022, and the contract is not renewed or extended on or after January 30, 2022:	. Executive Order 13658 generally applies to the contract. . The contractor must pay all covered workers at least $11.25 per hour (or the applicable wage rate listed on this wage determination, if it is higher) for all hours spent performing on that contract in 2022.

The applicable Executive Order minimum wage rate will be adjusted annually. If this contract is covered by one of the Executive Orders and a classification considered necessary for performance of work on the contract does not appear on this wage determination, the contractor must still submit a conformance request.

Additional information on contractor requirements and worker protections under the Executive Orders is available at https://www.dol.gov/agencies/whd/government-contracts.

Modification Number	Publication Date
0	01/07/2022
1	02/25/2022

PLAS0072-001 06/01/2021

ZONE 1:

	Rates	Fringes
CEMENT MASON/CONCRETE FINISHER	$ 32.44	19.56

Zone Differential (Add to Zone 1 rate): Zone 2 - $2.00

BASE POINTS: Spokane, Pasco, Lewiston, Wenatchee

Zone 1: 0-45 radius miles from the main post office

Zone 2: Over 45 radius miles from the main post office

SUID2013-010 06/17/2013

	Rates	Fringes
CARPENTER (Form Work Only)	$ 26.57	8.10
ELECTRICIAN	$ 26.83	11.94
HIGHWAY/PARKING LOT STRIPING: Painter	$ 23.80	6.67
LABORER: Asphalt, Includes Raker, Shoveler, Spreader and Distributor	$ 22.86	9.40
LABORER: Common or General	$ 22.92	10.01
LABORER: Concrete Saw (Hand Held/Walk Behind)	$ 23.98	11.05
LABORER: Grade Checker	$ 23.41	10.78
LABORER: Mason Tender - Cement/Concrete	$ 23.52	10.39
OPERATOR: Backhoe/Excavator/Trackhoe	$ 25.97	10.95
OPERATOR: Bobcat/Skid Steer/Skid Loader	$ 25.35	11.55
OPERATOR: Broom/Sweeper	$ 26.82	11.55
OPERATOR: Bulldozer	$ 25.73	11.51
OPERATOR: Crane	$ 27.18	10.97
OPERATOR: Crusher	$ 25.06	9.23
OPERATOR: Grader/Blade	$ 26.00	10.30
OPERATOR: Hydroseeder	$ 24.76	11.51
OPERATOR: Loader	$ 25.76	10.31
OPERATOR: Mechanic	$ 26.00	9.93
OPERATOR: Oiler	$ 25.66	9.23

OPERATOR: Paver (Asphalt,
Aggregate, and Concrete).....$ 25.66 11.03

OPERATOR: Roller (Subgrade).....$ 22.24 8.57

OPERATOR: Roller.....$ 25.49 11.55

OPERATOR: Rotomill.....$ 29.78 4.52

OPERATOR: Screed.....$ 25.71 11.55

TRAFFIC CONTROL: Flagger.....$ 21.46 10.12

TRAFFIC CONTROL:
Laborer-Cones/
Barricades/Barrels -
Setter/Mover/Sweeper.....$ 22.66 10.90

TRUCK DRIVER: Dump Truck.....$ 23.40 10.75

TRUCK DRIVER: Lowboy Truck.....$ 22.12 13.20

TRUCK DRIVER: Oil
Distributor Truck.....$ 22.54 12.35

TRUCK DRIVER: Water Truck.....$ 23.12 10.75

WELDERS - Receive rate prescribed for craft performing
operation to which welding is incidental.

==========

Note: Executive Order (EO) 13706, Establishing Paid Sick Leave for Federal Contractors applies to all contracts subject to the Davis-Bacon Act for which the contract is awarded (and any solicitation was issued) on or after January 1, 2017. If this contract is covered by the EO, the contractor must provide employees with 1 hour of paid sick leave for every 30 hours they work, up to 56 hours of paid sick leave each year. Employees must be permitted to use paid sick leave for their own illness, injury or other health-related needs, including preventive care; to assist a family member (or person who is like family to the employee) who is ill, injured, or has other health-related needs, including preventive care; or for reasons resulting from, or to assist a family member (or person who is like family to the employee) who is a victim of, domestic violence, sexual assault, or stalking. Additional information on contractor requirements and worker protections under the EO is available at
https://www.dol.gov/agencies/whd/government-contracts.

Unlisted classifications needed for work not included within the scope of the classifications listed may be added after award only as provided in the labor standards contract clauses (29CFR 5.5 (a) (1) (ii)).

The body of each wage determination lists the classification and wage rates that have been found to be prevailing for the cited type(s) of construction in the area covered by the wage

determination. The classifications are listed in alphabetical order of ""identifiers"" that indicate whether the particular rate is a union rate (current union negotiated rate for local), a survey rate (weighted average rate) or a union average rate (weighted union average rate).

Union Rate Identifiers

A four letter classification abbreviation identifier enclosed in dotted lines beginning with characters other than ""SU"" or ""UAVG"" denotes that the union classification and rate were prevailing for that classification in the survey. Example: PLUM0198-005 07/01/2014. PLUM is an abbreviation identifier of the union which prevailed in the survey for this classification, which in this example would be Plumbers. 0198 indicates the local union number or district council number where applicable, i.e., Plumbers Local 0198. The next number, 005 in the example, is an internal number used in processing the wage determination. 07/01/2014 is the effective date of the most current negotiated rate, which in this example is July 1, 2014.

Union prevailing wage rates are updated to reflect all rate changes in the collective bargaining agreement (CBA) governing this classification and rate.

Survey Rate Identifiers

Classifications listed under the ""SU"" identifier indicate that no one rate prevailed for this classification in the survey and the published rate is derived by computing a weighted average rate based on all the rates reported in the survey for that classification. As this weighted average rate includes all rates reported in the survey, it may include both union and non-union rates. Example: SULA2012-007 5/13/2014. SU indicates the rates are survey rates based on a weighted average calculation of rates and are not majority rates. LA indicates the State of Louisiana. 2012 is the year of survey on which these classifications and rates are based. The next number, 007 in the example, is an internal number used in producing the wage determination. 5/13/2014 indicates the survey completion date for the classifications and rates under that identifier.

Survey wage rates are not updated and remain in effect until a new survey is conducted.

Union Average Rate Identifiers

Classification(s) listed under the UAVG identifier indicate that no single majority rate prevailed for those classifications; however, 100% of the data reported for the classifications was union data. EXAMPLE: UAVG-OH-0010 08/29/2014. UAVG indicates that the rate is a weighted union average rate. OH indicates the state. The next number, 0010 in the example, is an internal number used in producing the wage determination. 08/29/2014 indicates the survey completion date for the classifications and rates under that identifier.

A UAVG rate will be updated once a year, usually in January of each year, to reflect a weighted average of the current negotiated/CBA rate of the union locals from which the rate is based.

WAGE DETERMINATION APPEALS PROCESS

1.) Has there been an initial decision in the matter? This can be:

* an existing published wage determination
* a survey underlying a wage determination
* a Wage and Hour Division letter setting forth a position on a wage determination matter
* a conformance (additional classification and rate) ruling

On survey related matters, initial contact, including requests for summaries of surveys, should be with the Wage and Hour National Office because National Office has responsibility for the Davis-Bacon survey program. If the response from this initial contact is not satisfactory, then the process described in 2.) and 3.) should be followed.

With regard to any other matter not yet ripe for the formal process described here, initial contact should be with the Branch of Construction Wage Determinations. Write to:

Branch of Construction Wage Determinations
Wage and Hour Division
U.S. Department of Labor
200 Constitution Avenue, N.W.
Washington, DC 20210

2.) If the answer to the question in 1.) is yes, then an interested party (those affected by the action) can request review and reconsideration from the Wage and Hour Administrator (See 29 CFR Part 1.8 and 29 CFR Part 7). Write to:

Wage and Hour Administrator
U.S. Department of Labor
200 Constitution Avenue, N.W.
Washington, DC 20210

The request should be accompanied by a full statement of the interested party's position and by any information (wage payment data, project description, area practice material, etc.) that the requestor considers relevant to the issue.

3.) If the decision of the Administrator is not favorable, an interested party may appeal directly to the Administrative Review Board (formerly the Wage Appeals Board). Write to:

Administrative Review Board
U.S. Department of Labor
200 Constitution Avenue, N.W.
Washington, DC 20210

4.) All decisions by the Administrative Review Board are final.

==========

END OF GENERAL DECISIO"

POST THIS ON JOB SITE WITH WAGE DECISION(S)

EMPLOYEE RIGHTS
UNDER THE DAVIS-BACON ACT

FOR LABORERS AND MECHANICS EMPLOYED ON FEDERAL OR FEDERALLY ASSISTED CONSTRUCTION PROJECTS

THE UNITED STATES DEPARTMENT OF LABOR WAGE AND HOUR DIVISION

PREVAILING WAGES	You must be paid not less than the wage rate listed in the Davis-Bacon Wage Decision posted with this Notice for the work you perform.
OVERTIME	You must be paid not less than one and one-half times your basic rate of pay for all hours worked over 40 in a work week. There are few exceptions.
ENFORCEMENT	Contract payments can be withheld to ensure workers receive wages and overtime pay due, and liquidated damages may apply if overtime pay requirements are not met. Davis-Bacon contract clauses allow contract termination and debarment of contractors from future federal contracts for up to three years. A contractor who falsifies certified payroll records or induces wage kickbacks may be subject to civil or criminal prosecution, fines and/or imprisonment.
APPRENTICES	Apprentice rates apply only to apprentices properly registered under approved Federal or State apprenticeship programs.
PROPER PAY	If you do not receive proper pay, or require further information on the applicable wages, contact the Contracting Officer listed below:

or contact the U.S. Department of Labor's Wage and Hour Division.

For additional information:

1-866-4-USWAGE

(1-866-487-9243) TTY: 1-877-889-5627

WHD U.S. Wage and Hour Division

WWW.WAGEHOUR.DOL.GOV

U.S. Department of Labor | Employment Standards Administration | Wage and Hour Division

WH 1321 (Revised April 2009)

DERECHOS DEL EMPLEADO

BAJO LA LEY DAVIS-BACON

PARA OBREROS Y MECÁNICOS EMPLEADOS EN PROYECTOS DE CONSTRUCCIÓN FEDERAL O CON ASISTENCIA FEDERAL

LA SECCIÓN DE HORAS Y SUELDOS DEL DEPARTAMENTO DE TRABAJO DE EEUU

SALARIOS PREVALECIENTES No se le puede pagar menos de la tasa de pago indicada en la Decisión de Salarios Davis-Bacon fijada con este Aviso para el trabajo que Ud. desempeña.

SOBRETIEMPO Se le ha de pagar no menos de tiempo y medio de su tasa básica de pago por todas las horas trabajadas en exceso de 40 en una semana laboral. Existen pocas excepciones.

CUMPLIMIENTO Se pueden retener pagos por contratos para asegurarse que los obreros reciban los salarios y el pago de sobretiempo debidos, y se podría aplicar daños y perjuicios si no se cumple con las exigencias del pago de sobretiempo. Las cláusulas contractuales de Davis-Bacon permiten la terminación y exclusión de contratistas para efectuar futuros contratos federales hasta tres años. El contratista que falsifique los registros certificados de las nóminas de pago o induzca devoluciones de salarios puede ser sujeto a procesamiento civil o criminal, multas y/o encarcelamiento.

APRENDICES Las tasas de aprendices sólo se aplican a aprendices correctamente inscritos bajo programas federales o estatales aprobados.

PAGO APROPIADO Si Ud. no recibe el pago apropiado, o precisa de información adicional sobre los salarios aplicables, póngase en contacto con el Contratista Oficial que aparece abajo:

o póngase en contacto con la Sección de Horas y Sueldos del Departamento de Trabajo de EEUU.

Para obtener información adicional:

1-866-4-USWAGE

(1-866-487-9243) TTY: 1-877-889-5627

WHD U.S. Wage and Hour Division

WWW.WAGEHOUR.DOL.GOV

U.S. Department of Labor | Employment Standards Administration | Wage and Hour Division

WH 1321 SPA (Revised April 2009)

City of Moscow
Latah County, Idaho
Sixth Street Crossing Over Paradise Creek

Section 7

City of Moscow Federally Funded Projects Davis Bacon Labor Standards

THIS PAGE WAS INTENTIONALLY LEFT BLANK

CITY OF MOSCOW
GRANT AND SPECIAL FUNDED PROJECTS
DAVIS BACON LABOR STANDARDS REQUIREMENTS
Updated – March 2022

SUMMARY OF RESPONSIBILITIES

Labor Standards Compliance is an effort of all parties involved and prevention is the key to success with labor standards. Some basic objectives to protect worker's rights are:

A. Responsibilities of Grant Administrator:

1. Make sure proper, current wage decision and labor standards provisions are contained in the bid documents.
2. Attend the pre-bid meeting/tour to notify contract bidders of federal labor standards provisions.
3. Conduct 10-day wage check.
4. Verify eligibility of Contractor.
5. Participate in preconstruction conference.
6. Ensure submission of all appropriate documentation, including payroll authorized signature form, payroll overview, signed checklists, requests for Additional Classifications, and documentation of fringe benefit plans.
7. Ensure wage decisions and/or additional classifications and USDOL poster are posted on site.
8. Conduct on-site interviews with laborers and mechanics.
9. Review Certified Payrolls and compare to the employee interviews and wage decisions.
10. Notify Prime Contractor and subcontractors (as applicable) of payroll discrepancies.
11. Notify IDC Specialist of wage restitution found due, including the preparation and submission of Labor Standards Enforcement Reports.
12. Investigate probable violations and complaints of underpayment and submit Labor Standards Enforcement Reports as necessary.

B. Responsibilities of Prime Contractor:

1. Attend pre-construction conference.
2. Review and identify any Additional Classifications needed by all contractors and subcontractors for the project.
3. Read, understand, and sign all appropriate forms from the Grant Administrator, including but not limited to: contractor certification, certificate of substantial completion, pre-construction checklist, and payroll authorized signature form.
4. Comply, in a timely manner, with requests from Grant Administrator. Including documentation of fringe benefits, correction CPRs, and wage restitution.
5. Comply with all applicable requirements and reporting.
6. Include appropriate wage decisions and labor standards clauses in contracts with subcontractors.
7. Insertion of all applicable clauses in all contracts and subcontracts.
8. Ensure labor standards compliance from subcontractors.
9. Post wage decision, including additional wage classifications, at work site.

10. Collect certified payrolls from all subcontractors, if applicable.
11. Submit all certified payrolls to Grant Administrator weekly.
12. Ensure availability of the prime contractor and subcontractor's employees for interviews at the job site with the Grant Administrator or agency representative.

APPLICABLE LAW

A. Davis-Bacon Act: The Davis-Bacon Act (DBA) requires the payment of prevailing wage rates (which are determined by the USDOL) to all workers. The law applies to construction, alterations or repair contracts in excess of $2,000. Construction includes alterations and/or repair, including painting and decorating, of public buildings or public works. Those Davis-Bacon provisions contained in HUD assisted construction programs are known as "Related Acts" and will be referred to as DBRA in this chapter.

B. Copeland "Anti-Kickback" Act: The Copeland Act requires employers to pay employees at least once a week, without any deductions or rebates except permissible deductions. The Copeland Act also requires every employer (contractor and subcontractor) maintain payroll records and to submit weekly payroll reports (CPRs). The Act applies to all contracts covered by Davis-Bacon. Violation of this Act is a criminal offense.

C. Contract Work Hours and Safety Standards Act (CWHSSA): CWHSSA applies to contracts over $100,000. CWHSSA requires workers to receive overtime (O/T) compensation at time and one-half pay for overtime hours (over 40 hours in any workweek) plus full fringe worked on the covered project [(1 and ½ x base pay) + fringe = O/T compensation]. CWHSSA violations render the contractor liable to the underpaid worker for wage restitution and the United States for liquidated damages penalty ($10/calendar day per violation). Intentional violations of CWHSSA standards are considered a federal criminal misdemeanor.

D. Fair Labor Standards Act (FLSA): The FLSA pertains to federal minimum wage rates, overtime pay, recordkeeping and child labor requirements. These requirements generally apply to any labor performed and may be pre-empted by other federal standards such as the DBRA prevailing wage requirements and CWHSSA overtime provisions. Only the USDOL has the authority to administer and enforce FLSA. HUD will refer to the USDOL any possible FLSA violations that are found on HUD projects.

EXEMPTIONS TO DAVIS-BACON AND RELATED ACTS (DBRA)

A. Non-Covered Job Classifications: Workers performing the normal duties of the following job classifications are not subject to prevailing wage requirements of DBRA:

1. Project engineer
2. Project foreman (supervisory only), as distinguished from a working foreman (one who devotes more than twenty (20) percent of his/her time during a work week to mechanic or laborer duties, and who must be paid the applicable rate for the hours so worked).
3. Watchman
4. Clerical workers

B. Volunteer Labor: A volunteer is an individual who performs services for a public or private entity for civic, charitable or humanitarian reasons without promise, expectations or receipt of compensation for services rendered. Individuals are considered to be volunteers only when their services are offered freely and without pressure and coercion, direct or implied, from an employer. Prison or correctional institution inmates can be considered volunteer workers if the institution's program meets certain parameters.

For a project that will have work done solely by volunteers alone or in which there is a mix of paid workers and volunteers, the grantee shall record the name and address of the project, the number of hours worked and the hourly rate for all work performed by volunteers.

Volunteer Liability Insurance: Volunteer participation on a project can include inherent risks and accidents may result in unforeseen injury. In order to protect the community and volunteers, volunteer liability insurance is a solution.

C. Force Account: The U. S. Department of Labor has taken the position that prevailing wage requirements do not apply to employees of a state or political subdivision of a state. In some instances, rather than contracting or subcontracting out construction work, a grant recipient performs the construction in-house, with its own "force account" employees. Such force account work is not subject to the prevailing wage requirements of DBRA. Furthermore, the USDOL does not consider a state or local government to be a contractor, even if it enters into a contract to perform construction work (see 29 CFR Section 5.2(h)).

D. Cleaning: Cleaning performed during construction is subject to prevailing wage provisions. In the absence of a specific wage rate for the cleaning classification, the cleaners must be paid the predetermined wage rate for laborers. Cleaning performed after the completion of construction to prepare the premises for occupancy that is not done under the construction contract is not subject to the prevailing wage requirements.

E. Demolition: Demolition not related to construction is not subject to the prevailing wage requirements of DBRA. For example, the demolition of a building because the structure is no longer needed would not be a covered construction activity. However, where an existing building is being demolished as a phase of a construction project subject to the prevailing wage requirements of DBRA, the demolition would also be covered, as in the case of demolition performed to permit construction of a new building.

F. Utility Employees: Employees of utilities are exempt provided they are only extending existing service to the property.

G. Precutting of Parts and Prefabrication of Assemblies: The precutting of parts and/or the prefabrication of assemblies are not subject to the prevailing wage requirements of DBRA unless conducted in connection with and at the site of the project or in a temporary plant set up elsewhere to supply the needs of the project and dedicated exclusively or nearly so, to performance of the contract or project.

H. Supply and Installation Contracts: The manufacturer or furnisher of materials, supplies or equipment is not subject to prevailing wages unless conducted in connection with and at the site of the project or set up elsewhere to meet the needs of the project. If a supply contract, not otherwise covered, requires the supplier to install the product, the installation portion of

the contract is subject to prevailing wage requirements of DBRA. There is an exception if the installation involves an incidental amount of construction activity. It is not subject to prevailing wage requirements in this instance. Contracts for the supply and installation of window shades, venetian blinds, traverse rods, and draperies involve only an incidental amount of construction activity, and therefore are not subject to prevailing wage decisions. The installation of a lagoon liner or a pre-fabricated park bathroom is an example of work subject to prevailing wage rates. Questions concerning the coverage of installation activity should be referred to the Grants Administrator.

I. Railroad Employees: Employees of railroads operating under collective bargaining agreements that are subject to the Railway Labor Act are not subject to DBRA. However, any workers performing construction work on the railroad under a contract are subject to DBRA.

LABOR STANDARDS ADMINISTRATION: PRE-BID PHASE

A construction project covered by federal labor standards requires a series of specific actions by Grant Administrators prior to awarding a construction contract. Refer to the list in the Summary of Responsibilities.

Bidding Documents

The contract for construction is the vehicle to ensure contractor compliance and Davis-Bacon wage enforcement. Therefore, the bidding documents for each project subject to Davis-Bacon wage rates must contain both a Davis-Bacon wage decision and federal labor standards clauses. It is the responsibility of the Grant Administrator to obtain the most current Davis-Bacon wage decision and provide it and the labor standards clauses to the project architect or engineer to ensure that these documents are included in the bidding documents.

The Grant Administrator must review the bidding documents using the Bid Document Review Certification form and certify they contain the correct Davis-Bacon wage decision, General Conditions and Federal Labor Standards Provisions.

A. Davis-Bacon Wage Decision (Wage Determination): Each construction contract subject to federal Davis-Bacon labor standards requirements must contain a Davis-Bacon wage decision. The Davis-Bacon wage decision is a listing of wage rates and fringe benefits for each classification of laborers and mechanics determined to be prevailing in a given area (usually a county) for a particular type of construction.

   The USDOL has distinguished four general types of construction: Heavy Construction, Highway Construction, Building Construction and Residential Construction. The Grant Administrator is responsible for obtaining the proper wage decision. One can be obtained from the following web address: https://sam.gov/content/home. Davis Bacon projects require wage decisions to be updated to ensure that the most current and correct wage decision is being used. The Grant Administrator is responsible for obtaining and documenting that the wage decision is updated 10 days prior to bid opening.

   Failure to include the required wage decision and appropriate labor standards provisions in bidding documents will not relieve the city or county from potential liabilities for enforcement

actions. It is the prime contractor's responsibility to ensure inclusion of wage rates and labor standards provisions in all subcontracts. Any failure to include a wage decision must be rectified.

B. Updating Wage Decisions: There are specified times that wage decisions must be updated for different procurements. In all cases, wage decisions must be updated to ensure that the proper and correct wage rate is used for the project.

1. Competitive Sealed Bidding

   Most construction contracts fall under the competitive sealed bid procurement process. This procurement process includes wage decisions in the bid documents and has a bid opening date. These projects require a Wage Decisions check to be completed no more than ten (10) days prior to bid opening. If the 10-day check falls on a weekend, the wage rate must be checked the Monday following the 10-day check. If the 10-day check falls on a holiday, the wage rate must be checked the day after the 10-day timeline.

Pre-Bid Meeting

During the pre-bid meeting, the federal labor requirements and wage decision should be reviewed with the contractors. This is the time to determine if all work classification(s) needed for the job are on the wage decision. If the work classification(s) needed do not appear on the wage decision, then an additional classification and wage will be needed. Additional classifications are typically approved after the construction contract is awarded.

LABOR STANDARDS ADMINISTRATION: POST-BID PHASE

The post-bid requirements consist of evaluating and tabulating each of the bidder's responses, verifying contractor eligibility, notifying contractor of award, holding a preconstruction conference (including additional classification requests), and obtaining all appropriate certifications.

Evaluation and Tabulation of bidders

After opening all sealed competitive bids, the grantee evaluates, prepares bid tabulation form and identifies the successful bidder. A successful bidder is the lowest responsive and responsible bidder.

Verification of Contractor Eligibility (Federal Debarred List)

All contractors must be eligible to work on federally assisted contracts. By the insertion of certification of eligibility clauses in all contracts and subcontracts, the prime contractor and all subcontractors state they are eligible for award of federally assisted or insured contracts. The Grant Administrator shall verify that all prime contractors are eligible before contract award by requesting verification.

Prime contractors shall be informed in preconstruction conferences that it is their responsibility to employ only eligible subcontractors. All subcontractors must certify eligibility in written contracts containing federal labor standards provisions.

Notice of Award

The contract must be awarded within 90 days of bid opening. If the contract has not been awarded within ninety (90) days after bid opening, *the Wage Decision must be updated*. To document this, send the new completed Wage Rate Update form to the Grant Administrator.

Preconstruction Conference

The preconstruction conference should address all questions related to the labor standards provisions posed by contractors and subcontractors and also applicable federal labor standards provisions. The preconstruction conference is to make certain that the contractor understands its responsibility for all federal labor standards provisions and Davis-Bacon compliance. The grantee, Grant Administrator and design professional shall hold a conference with the prime contractor and all subcontractors before the start of construction. At this time the contractor will be advised of the overall management of the project including the labor standards provisions.

A Preconstruction Conference Checklist has been prepared as a tool to review project management considerations. Give each contractor and subcontractor on the job a copy of the preconstruction conference packet. Submit the Preconstruction Conference Checklist to the Grant Administrator no more than five (5) days following the date of the conference.

Implementation of Federal Labor Standards

A. Apprentices: The only workers who can be paid less than the wage rate on the wage decision for their work classification are "apprentices" and "trainees" registered in approved apprenticeship or training programs, including Step-Up apprenticeship programs designed for Davis-Bacon construction work. Approved programs are those which have been registered with the U.S. Department of Labor (USDOL), Bureau of Apprenticeship and Training (BAT) or with a BAT-recognized State Apprenticeship Agency (SAC). **Note: Apprentices registered in a state or local (Idaho) sponsored program must also be registered with the USDOL, Bureau of Apprenticeship and Training. The Grant Administrator is responsible for verifying whether the program is registered in the sponsor database. The link to the database can be found here:** http://oa.doleta.gov/bat.cfm.

   Apprentices and trainees are paid wage rates in accordance with the wage schedule in the approved program plus the full fringe amount.

   1. "Probationary apprentice" can be paid as an apprentice if the BAT has certified that the person is eligible for probationary employment as an apprentice.

   2. The allowable ratio of apprentices and trainees to journeymen in any classification shall not be greater than the ratio permitted under the registered program. Apprentices or trainees employed at the job site in excess of the allowable ratio on a day to day basis shall be paid the wage rate contained in the wage decision for the classification of work actually performed.

   3. Any worker listed on a payroll at an apprentice or trainee wage rate, who is not registered with or in a program approved by USDOL/BAT, shall be paid the Davis-Bacon wage rate for the classification of work actually performed.

4. The contractor or subcontractor will be required to furnish to the labor standards compliance person written evidence of the registration of his/her employees in a USDOL approved program.

B. Truck Drivers: Truck drivers employed by a construction contractor or construction subcontractor are not covered by the prevailing wage requirements of the Davis-Bacon Act while engaged in transporting materials or supplies to or from the site work. Truck drivers whose time spent on the site of work that is considered de minimis, such as only a few minutes at a time to pick up or drop off materials or supplies, are also exempt from the Davis-Bacon Act. Davis-Bacon would apply to them only for their time employed "directly upon the site of the work." Davis-Bacon Act coverage will apply to truck drivers while hauling between the project site and any special facilities established exclusively for the project (29 CFR 5.2 (7)(2)).

C. Working Subcontractors/Owner Operators: A working subcontractor/owner operator is a contractor who owns the business and performs the work himself and has no employees. All working subcontractors/owner operators need to be reported on the certified payrolls of whoever hired them. If they are the prime contractor, the grantee is responsible for signing and submitting payrolls. Their name, employee identification number (if applicable), work classification, contract amount and "self-employed" designation must all be included on the certified payroll.

   Contractors working on the project with their employees shall be listed on the payroll. They must list their name, work classification including "owner" and the daily and total hours worked. They do not need to list their rate of pay or amount earned.

D. Relatives: There are no exceptions made in the enforcement of DBRA on the basis of family relationship for relatives who are performing the work of laborers or mechanics. They must be paid the prevailing wage rate for the classification of work performed and be included on the certified payrolls.

E. Certified Payroll Reports (CPRs): Each contractor, subcontractor, and lower-tier subcontractor, shall submit to the Grant Administrator, Certified Payroll Reports for each work week from the time work is started on the project until it is completed. Payrolls shall be numbered sequentially and the last payroll marked "final." If work is not performed on the project during a given work week, a payroll does not need to be submitted if the contractor numbers his payrolls sequentially and notifies the Grant Administrator he will not be working on the project for a specified period of time. Otherwise, the contractor should submit "No Work" payrolls when there is a temporary break in work on the project. Contractors are required to pay workers every week. They cannot put two weeks of work on one payroll. **Payrolls shall be completed and submitted no later than seven (7) workdays following completion of the workweek.**

   The prime contractor is responsible for full compliance with regard to his/her own workforce and with regard to the compliance of every subcontractor. For this reason, all CPRs and any related records are submitted to the Grant Administrator through the prime contractor. Payrolls and related records shall be maintained during the course of the construction work and preserved by the contractor and the subcontractor for at least four (4) years.

F. Certified Payroll Reports Format (Form WH-347): Certified Payroll Reports information may be submitted in any form, provided that the Grant Administrator can reasonably interpret the information to monitor employer compliance with the labor standards and all required information is included on the form. Contractors are encouraged to use USDOL Payroll Form WH-347. The weekly payrolls are called certified because each payroll is signed and contains language certifying that the information reported on the payroll is true. The payroll certification language is on the reverse side of the WH-347. If the contractor uses another type of payroll format, he may attach the certification from the back of the WH-347. Even though a contractor may use an appropriate payroll form of his own choice, he must report all required items of information and submit a copy of the weekly Statement of Compliance or a form containing the identical wording contained in Form WH-347. Only one Statement of Compliance is required for each weekly payroll no matter how many pages are needed to report the employee data.

G. Inspection of Records and On-Site Interviews: Each contractor shall make the required records (CPRs and related documents) available for inspection, copying or transcription by authorized representatives of the City of Moscow or IDEQ. In addition, each employer shall permit authorized representatives to interview employees during working hours on the job site.

Failure by any contractor to submit the required records or to make them available, or to permit on-site employee interviews may, after written notice to the contractor, cause a suspension of any further payment, advance or guarantee of funds. In addition, failure to submit the records on request or to make them available may be grounds for debarment action.

H. Proper Designation of Trade: The classification of each employee must be selected from the wage decision or an approved Additional Classification based on the actual type of work performed. Each worker must be paid no less than the wage rate on the wage decision for that classification regardless of his or her level of skill. In other words, if someone is performing carpentry work on the project, they must be paid no less than the wage rate on the wage decision for Carpenters, even if they are not considered by the contractor to be fully trained as a Carpenter. The only people who can be paid less than the rate for their craft are apprentices registered with the USDOL, Bureau of Apprenticeship and Training.

I. Additional Classifications: If it is found that a wage decision does not contain some of the classifications needed for the project, notify the Grant Administrator. If there is not a suitable classification on the existing wage decision, then an additional classification will be requested. The rate of pay for the additional classification cannot be below the unskilled labor wage rate on the wage decision. Rates for additional laborers, truck drivers and power equipment operators should be compared with other laborers, truck drivers and power equipment operators respectively. Requested rates should be comparable to similar occupations listed in similar classifications. The Additional Classification Request form will be completed by the Grant Administrator and sent to IDEQ along with a copy of the project wage decision. IDEQ will forward the additional classification request to the USDOL for approval and forward their determination to the Grant Administrator.

COMPLIANCE MONITORING AND ENFORCEMENT

There are several important aspects of effective labor standards compliance. Preventive measures which can be undertaken prior to the start of construction reduce the commission of violations after construction begins. However, misunderstandings can still occur. Monitoring identifies possible misunderstandings on the part of the employers, discrepancies in the record, and violations. The two key aspects of routine monitoring include regular reviews of project CPRs and on-site interviews with laborers employed on the project. This routine monitoring is performed by the Grant Administrator to ensure the compliance of all contractors with the applicable labor standards provisions. Written monitoring reports to the principal contractor advise the contractor of the status of compliance, provide clarification where misunderstanding may exist, and advise the contractor of any additional submissions which may be required to correct discrepancies or to complete the record. Contractors are permitted thirty (30) days to provide missing documentation, and correct any discrepancies or violations, including any underpayments of wages.

Weekly Payroll Reviews

The Grant Administrator shall insist upon prompt submission of all payrolls no later than seven (7) work days following completion of the workweek. The Grant Administrator shall withhold funds from the contractor if excessively delinquent in the submission of payrolls. The payrolls shall be examined upon receipt so any necessary corrective action may be initiated before the problem multiplies, and may be accomplished while the workers are still available. Special attention should be given to each project by the Grant Administrator during the early stages of construction to determine whether the principal contractor is meeting his responsibilities regarding payrolls. Spot-checking of payrolls is permissible after the initial review of four to five weeks of payrolls indicates no significant problems. Initial CPR review parameters and corrective actions required of the contractor shall include the following aspects:

A. Payroll Format: Contractors are urged to use Payroll Form WH-347 which accounts for all required information and includes the "Statement of Compliance" (the certified part of the payroll) on its reverse side. Employers may utilize any other appropriate payroll form provided that it contains all of the required information and is accompanied by a statement containing the identical wording on the form WH-347.

B. Foreman: If a foreman is listed on the payroll with no other classification, it must be determined if he is a working foreman on a project. A project foreman is distinguished from a working foreman.

    1. Project Foreman: This job is supervisory in nature. He can spend up to twenty (20) percent of his time performing mechanic or laborer duties and will be exempt from Davis-Bacon wages. He does not need to be listed on the payroll.

    2. Working Foreman: This job is one that devotes more than twenty (20) percent of the time during a workweek to mechanic or laborer duties. This foreman must be paid the Davis-Bacon rate for all the hours worked. The classification would be the one that he performs the mechanic or laborer duties in.

C. Split Classification(s) This term refers to employees performing work in more than one classification during the same workweek. The employee must be paid the Davis-Bacon rate for

actual hours spent in each classification, provided the work performed is capable of separation into more than one classification, and provided time records are kept in accordance with actual hours spent in each classification.

D. Hours Worked, Pay Rates, and Gross Wages Earned: The daily and total hours worked for the week per employee per classification must be shown. List actual hourly rate paid to the employee for straight time worked plus any cash fringes paid to the employee. The basic hourly rate and fringe rate cannot be less than the applicable wage decision in the approved contract specifications. The payroll should only show the regular and overtime hours worked on the Davis-Bacon covered project. If an employee performs work at job sites other than the project for which the payroll is prepared, those "other job" hours should not be reported on the payroll. For employees with earnings on other projects, gross wages for the project for which the payroll is prepared can be shown over gross earnings for "all projects" (for example, $425.40/$764.85). Deductions and net pay are based on the "all projects" earnings.

> Corrections: Contractors must submit a supplemental Certified Payroll Report or other written documentation reflecting daily and total hours worked for the week per employee as well as the fringe benefit contribution. If underpayments have occurred, the contractor shall be required to make restitution.

E. Overtime Hours Worked: Overtime hours shall be compensated at not less than one and one-half (1 and 1/2) times the regular rate of basic pay plus the straight-time rate of any required fringe benefits for anything over a 40-hour work week. Weekly hours shall be reviewed to determine whether overtime hours were worked and properly compensated. Be especially careful when reviewing split classifications because sometimes hours between classifications are not totaled and overtime can be missed.

> Corrections: Where CWHSSA overtime violations occur (contracts over $100,000), the contractor shall be required to pay restitution to the affected employees and shall be notified of liability for liquidated damages. Only overtime hours worked on the covered project are subject to CWHSSA compensation. Where the project is not subject to CWHSSA, the employer will be notified of possible FLSA overtime violations.

F. Fringe Benefits: Where fringe benefits are included on the wage decision or where the employer seeks credit for fringe benefit payments, the employer shall certify as to the payment of fringe benefits on the *Statement of Compliance* (reverse of WH-347) by marking either 4(a), that fringe benefits are paid to approved funds, plans or programs, or 4(b) that fringe benefits are paid in cash, and note any exceptions under 4(c). A fringe benefits program includes health insurance, retirement, life insurance, and some contributions to training funds (See page 12 for more information about Fringe Benefits). Fringe benefits do not include employer payments or contributions required by other federal, state or local laws, such as the employer's contribution to Social Security or some disability insurance payments.

> Corrections: Contractors shall be required to submit corrected CPRs where the CPR does not indicate how the employer met any fringe benefit obligation contained in the wage decision. If fringe benefits are contained in the wage decision and the contractor does not participate in a bona fide fringe benefit program, the employer shall pay the cash equivalent of the required fringe benefit directly to the employees

with the basic rate of pay. (Note: Fringe is paid for overtime worked, but not computed in the time and one half for overtime pay.) Where underpayments have occurred, the contractor shall be required to make restitution to the affected employees.

G. Deductions Made and Actual Net Wages Paid: All deductions shall be identified and reviewed for any non-permissible deductions. Permissible deductions that **do not require** written authorization from the employee include deductions made in compliance with requirements of federal, state or local law, (e.g. taxes, social security, deductions required by court processes – including Child Support withholdings, etc.). **Any voluntary deduction** (savings account, loan repayment, employee contribution to health insurance, wage advance, pensions, life or accident insurance, and retirement plans) **must be authorized in writing by the employee** (see Employee Voluntary Deduction Authorization Form). The Voluntary Deduction Authorization Form signed by the employee is all that is needed and should accompany the first payroll on which the deduction appears. Deductions for tools are permissible only when the employee provides written authorization and it is a benefit to the employee. An excerpt from 29 CFR 3 provides additional information of permissible deductions. Other deductions are not allowable without prior approval from the U.S. Department of Labor.

H. Authorized Signature: The statement of compliance must be signed (original signature) by a principal of the firm (owner or officer such as the president or treasurer) or by an authorized agent (a person authorized by a principal in writing to sign the payroll reports). The signature authorization must be submitted with the first payroll.

Fringe Benefits

If fringe benefits are paid into a plan, the following criterion applies and documentation should be submitted to the Grant Administrator for review at the preconstruction conference (prior to the first payroll):

A. A contractor may credit contributions for bona fide fringe benefits. Bona fide benefits are those common to the construction industry and are paid into a fund, plan or program on the employee's behalf. Contractors may take credit for contributions made under such conventional plans without requesting approval of the Grant Administrator. These plans are funded plans. See "G" below for examples and guidelines.

B. Contributions to funded plans must be made irrevocable and paid at least quarterly to a third-party trust.

C. When the per hour contribution for benefits paid into a plan do not equal the total rate set forth in the wage decision, the difference must be paid to the employee in cash.

D. Fringe benefits must be paid for straight time and overtime; however, fringe benefits are not included when computing the overtime rate.

E. Employees excluded from funded plans must be paid fringe benefits in cash.

F. Vacation and sick leave plans are generally unfunded, paid from the contractor's own account, and require Grant Administrator approval before a contractor takes credit toward meeting the fringe benefit obligation.

G. The fringe may be shown as $4.15 + 3 1/2%. The 3 1/2% is computed on the base rate, then added back to the fringe. For example, base rate is $21.68 and fringe rate is $4.15 + 3 1/2%. Multiply the base rate by the percent fringe ($21.68 x .035 =.76). Add the amount computed to the fringe ($4.15 + .76 = $4.91). Total fringe required is $4.91. For apprentices, the percentage base rate is used to calculate the fringe.

The following method is an example on how to determine if the amount contributed to the plan equals the amount required to be paid for fringe benefits per the appropriate Davis-Bacon Wage Decision.

METHOD: In determining the cash equivalent credit for fringe benefit payments, take the total amount that would be paid into the funded plan for a year and divide by 2080 hours.

EXAMPLE: Contractor pays $100/month to a funded health insurance plan. Davis-Bacon Wage Rates require $4/hour paid for fringe benefits.

FORMULA: ($100 x 12) divided by 2080 = .57 cents as the cash equivalent.

RESULT: The contractor must pay $3.43 to the employee in cash for fringe benefits and the remaining .57 cents to the funded plan. The contractor must note on the back of the payroll under (4)(a-c) how fringe benefits are paid and provide documentation for the funded plan as listed below.

Adequacy of fringe benefits will be determined by the Grant Administrator based upon a review of the following information that you are requested to submit:

1. Description of the coverage that you provide those employees and the name, address and phone number of the third-party trustee.

2. Signed authorization of those employees to accept those specific employer-paid contribution amounts considered bona fide fringe benefits.

3. The providers proof of payment into the plan, fund or program (i.e., monthly billing statement).

This adequacy is applicable for one (1) year from the date of review and applies to HUD funded projects.

Note: All contractors, based in Idaho and those based out of the state, that are doing work in Idaho are required to pay Idaho Unemployment Insurance. However, this amount does not count toward the required Davis-Bacon Fringe Benefit.

The above requested information must be submitted to: Grants Manager, City of Moscow, P O Box 9203, Moscow ID 83843.

Falsification of Certified Payroll Reports

Contractors who willfully violate the labor standards provisions may falsify Certified Payroll Reports to conceal the violations. Willfully violating contractor's Certified Payroll Reports often contain indicators that permit a Grant Administrator to determine whether they were falsified. Where falsification is suspected, it may be appropriate to send questionnaires to the employees to gather more information to determine the nature and extent of any violations. In order to resolve violations involving falsified Certified Payroll Reports, it is often necessary to conduct an investigation to determine the true work and wage payment activity and to "reconstruct" the payroll.

Common indicators of falsification and willful violations follow:

A. Ratio of Laborers to Mechanics: Except for concrete, landscaping and similar contractors, the ratio of laborers to mechanics should not exceed 1 to 1. A higher ratio of laborers normally indicates misclassification. In other words, laborers are performing some or all of mechanic's work. The false information may be limited to the classification of work.

B. Too Few or Irregular Hours: Most workers are employed on a regular forty (40) hour per week basis. CPRs that consistently reflect less than forty (40) hours per week for all or certain groups of employees or that reflect erratic work schedules (e.g., the crew works only a few hours per day scattered throughout the work week), indicate that the hours may have been reduced to give the appearance of compliance. The falsification in these cases may be limited to the hours worked.

C. Discrepancies in Wage Computations: CPRs that reflect frequent discrepancies in wage computations, e.g., even gross wage payments ($400/week) computed from an uneven hourly wage rate ($15.67/hour), indicate that the employees may be working on a piece rate basis or at an even ($10/hour) wage rate. Here, the falsification may involve the hours worked or the rate of pay, or both.

D. Extraordinary Deductions: Unexplained or unusually high deductions may indicate that the employee is being required to kickback a portion of their earnings. While this would indicate willful violations, it does not necessarily indicate falsification. The information on the CPR may otherwise be accurate.

On-Site Inspection

Maintaining compliance during the course of construction will save time, trouble, and expense to the contractor and grantee involved. Grant Administrators are encouraged to time their initial on-site monitoring within the first three (3) weeks of construction to assure all postings are displayed and conduct on-site interviews to identify potential problems as early as possible. The following on-site activities are required:

A. Posting: The Grant Administrator must ensure the wage decision any additional classifications and other required materials are posted by the contractor at the work site in a prominent and accessible place where the workers can easily read them. The Federal Labor Poster that informs employees of their rights and indicates complaints will be received by the Grant Administrator shall also be conspicuously displayed.

B. Employee Interviews: Every attempt shall be made to conduct on-site employee interviews with the workers on the job site. The purpose of the interviews is to capture observations of the work being performed and to get the workers' views on the hours they work, the type of work they perform and the wages they receive. Information gathered during the interview is recorded on the Record of Employee Interview form. The Record of Employee Interview form is compared to the corresponding contractor and subcontractors certified payrolls to test and verify the accuracy of the payroll information. If on-site interviews cannot be conducted, then mail interviews must be conducted.

Grant Administrators will make every attempt to interview up to ten (10) percent of the workers in all trades. At a minimum, these interviews would include at least one (1) person in each trade and each classification for each contractor. However, Grant Administrators are encouraged to target interviews to projects and/or groups of workers where violations are suspected or alleged. In this way, on-site interviews can be used to support a specific on-going investigation.

1. Place of Interview. Employees currently employed may be interviewed during working hours on the job, provided the interview can be properly and privately conducted on the premises. In cases of possible falsification of records, fear of reprisals or intimidation, it may be more advisable to conduct the interview elsewhere.

2. Initiating the Interview. The interviewer shall begin the interview by identifying themselves to the worker. They must confirm their identity by showing the worker credentials and explain the project is being constructed with assistance from the federal government, the payment of prevailing wages on construction projects with federal assistance is required by law, and the purpose of the interview is to obtain information for use in determining whether the required wages are being paid. Inform the employee that the information given during the interview is confidential and that their identity will only be disclosed with prior written consent of the employee.

3. Interview Time. If the interview is conducted on the job site, it shall be arranged causing the least inconvenience to the employer and employee.

Note: Interviews with non-English speaking workers will be conducted by a bi-lingual interviewer or with the assistance of a third-party interpreter. At no time shall the employer or other employees be used for interpretive services.

C. Record of Employee Interview: A Record of Employee Interview has been prepared as a convenient format for recording interviews. Once the corresponding certified payroll reports are received, the information on the Record of Employee Interview must be compared to the payroll reports. Any discrepancies noted between Record of Employee Interview information and that on the payroll report need to be noted in Remarks. If discrepancies are noted, follow-up actions to resolve the discrepancies must be taken.

LABOR STANDARDS FREQUENTLY ASKED QUESTIONS

1. What wage rate would a contractor pay their employee while traveling to and from a job site?

   Contractors are not bound by any Davis-Bacon regulations concerning the compensation of their employees during their travel time. However, the Fair Labor Standards Act mandates the payment of at least minimum wage to employees during travel time.

2. Should a contractor pay an employee overtime for driving to and from work on top of their forty-hour work week?

   No, the employee clock starts at the job site, therefore, the hours traveled to and from work do not count against the forty-hour work week, but the employee must be compensated according to the Fair Labor Standards Act. See number one.

3. If a contractor pays an employee his/her hourly rate for their travel time to and from a job site, could this be considered a fringe benefit?

   Yes. As long as it is a written statement included in the company policy.

4. If a contractor works on multiple projects, should they include all labor hours on the certified payroll?

   For example, if a contractor is working on a grant-funded City project and is also working on a project for someone else in another location that is NOT a City project, the contractor does not have to report any of the hours worked on the other project. He is only required to report the City project hours. However, the contractor is required to report the gross wages earned on all projects followed by the gross wages earned on the City project. The contractor can do this on the payroll itself. This is our way of finding out whether or not a contractor is paying overtime.

5. Are apprentices entitled to fringe benefits, or are they only entitled an hourly rate based on a journeyman's hourly rate?

   Apprentices that are registered with a USDOL Approved Apprenticeship Program are entitled to a percentage of the journeyman wage rate plus full fringe benefits.

6. Can a contractor require an employee to work during a week where there is a paid holiday? Would the holiday pay be considered in the regular forty-hour week or would the employee have to work the forty regular hours and get paid holiday hours as overtime?

   Employees must work a forty-hour work week before they are entitled to overtime. In the case above, the contractor can ask his/her employees to work up to a forty-hour work week before paying them overtime wages. However, the contractor must compensate employees for the holiday pay.

7. Do Davis-Bacon regulations have to be enforced if a "Surveyor and Surveyor Helper" classifications are working on a street improvement project?

Surveyors are "service" oriented and thus exempt from Davis-Bacon wages. If you see a Surveyor on any payrolls you are reviewing, don't worry about the Davis-Bacon implication. However, if you find a "service" orientated classification on any payroll, review only, do not make the judgment yourself, contact the Grants Administrator for clarification.

8. If a well drilling company is either testing or drilling exploratory wells, do Davis-Bacon wage rates apply?

   No. This is considered a service. However, when a drilling company drills a well in order to put it into service or production, then Davis-Bacon wage rates come into play and apply to the drilling rig operators.

9. Does the televising of lines fall under Davis-Bacon?

   No, the video recording of lines is exempt from Davis-Bacon as it is considered a service.

10. Is the use of a company truck for personal use considered a fringe benefit to an employee?

    No. It is not considered a fringe benefit. The use of the truck is considered as payment for travel expenses and is incurred for the employer's benefit.

11. If a contractor subs out to a subcontractor who has 4-5 contracted laborers how should the subcontractor account for the hours and wage rates?

    Consider the contract laborers as subs, as long as they are being paid according to an agreement and, for this situation, it is OK for the subcontractor carrying the contract laborers on his payroll. Have each of the subcontractors listed on the payroll, just like an owner/operator does.

12. Does an employee who worked 38 hours during a week and who took 8 hours of vacation earn overtime pay to the week?

    No, the employee must have worked over 40 hours during a week in order to earn overtime pay regardless of the vacation time taken during the week.

13. Are per diem and lodging expense payments to employees working out of town considered fringe benefits?

    No, these expenses are part of doing business for the employer. If the employee was not working out of town the payments would not be paid to the employee, therefore, they are not considered fringe benefits but are a cost of doing business.

14. What is NOT considered a bona fide fringe benefit?

    The Davis-Bacon Act excludes fringe benefits which a contractor or subcontractor is obligated to provide under other Federal, State or Local law. For example, payment for workman's compensation insurance under either a compulsory or elective State Statute is not considered payments for fringe benefits. While each situation must be separately considered on its own

merits, payments made for travel, subsistence or to industry promotion funds are not normally payments for fringe benefits under the Act.

Supplemental General Conditions

These Supplemental General Conditions are to be part of a grant or special funded construction project for the City of Moscow.

Preconstruction Conference

After the contract(s) have been awarded but before the start of construction, a conference will be held for the purpose of discussing requirements on such matters as project supervision, progress schedule and reports, payrolls, payment to contractors, contract change order, insurance, safety and other items pertinent to the project. The contractor shall arrange to have all subcontractors and supervisory personnel connected with the project on hand to meet with representatives of the engineer and owner to discuss any problems anticipated.

Reports and Information

The contractor, at such times and in such forms as the owner may require, shall furnish the owner such periodic reports as requested pertaining to the work or services undertaken pursuant to this contract, the costs and obligations incurred or to be incurred in connection therewith, and any other matters covered by this contract.

Conflict of Interest

No member, officer, or employees of the grantee, or its designees or agents, no members of the grantee's governing body and no other public official of the grantee who exercises any functions or responsibilities with respect to this contract during his/her tenure or for one (1) year thereafter, shall have any interest, direct or indirect, in work to be performed in connection with this contract. All contractors shall incorporate, or cause to be incorporated, in all subcontracts, a provision prohibiting such interest.

Minority Business Enterprise

1. Include any such qualified firms on solicitation lists.

2. Assure that such firms are solicited whenever they are potential sources.

3. When economically feasible, divide total requirements into small tasks or quantities so as to permit such firms maximum participation.

4. Where possible, establish delivery schedules which will encourage such participation.

5. Use the services and assistance of the Small Business Administration, Idaho Transportation Department's Disadvantage Business Enterprise Program, and other sources when appropriate. (24 CFR Part 85.36(e)(vi)).

Public Works Licensing of Contractors

Prior to the award of the contract, bidders shall possess or obtain a license issued in the state of Idaho by the Idaho Public Works Contractors License Board in the class and type specified for the value and scope of work to be done in accordance with the provision of Title 54, Chapter 19, Idaho Code, as amended. Subcontractors undertaking to perform any work covered by the contract must also possess or obtain a license prior to award of the contract. Any construction project with an estimated cost of less than fifty thousand dollars ($50,000) is exempt from the licensing requirement.

Standard Environmental Mitigation Measures

1. The construction contractors must comply with the Rules for the Control of Air Pollution in Idaho, IDAPA 58.01.01.651, by implementing precautions to prevent particulate matter from becoming airborne.

2. If any items of suspected historical or archaeological value are uncovered during construction, the contractor will be required to stop work and contact a City representative as soon as possible.

3. The collection and disposal of storm and surface water runoff from the project site must comply with the Idaho Department of Environmental Quality's (DEQ) Catalog of Storm Water Best Management Practices for design of all storm water treatment and disposal systems.

4. The contractor shall comply with the provisions of the Environmental Protection Agency's National Pollutant Discharge Elimination System (NPDES) General Permit for Storm Water Discharge from Construction Activities and the Construction Storm Water Pollution Prevention Plan (SWPPP).

5. If during the construction of the project, an underground storage tank, buried drum, other container, contaminated soil, or debris not scheduled for removal under the contract are discovered, the Contractor shall immediately notify the Engineer or other City representative. No attempt shall be made to excavate, open, or remove such material without written approval.

Clean Air and Water Act

For all contracts and subcontracts exceeding $100,000, the contractor and all subcontractors shall comply with the requirements of the Clean Air Act, as amended, 42 USC 1857 et seq., the Federal Water Pollution Control Act, as amended, 33 USC 1368 et seq., and the regulations of the Environmental Protection Agency with respect thereto, at 40 CFR 15, as amended.

1. Any building, facility or site listed on the EPA List of Violating Facilities as of this contract may not be used in the performance of this contract.

2. The contractor will comply with all the requirements of Section 114 of the Air Act and Section 308 of the Water Act relating to inspection, monitoring, entry, reports and information, as well as other requirements specified in Sections 114 and 308 of the respective Acts, and all regulations and guidelines issued thereunder.

3. Prior to signing this contract, the contractor shall notify the grantee of any communication from EPA indicating that a facility to be used in the performance of this contract is under consideration to be listed on the EPA List of Violating Facilities.

Insurance During Construction

The contractor shall have in effect without interruption from the date of construction commencement until final payment is made and the Project is closed-out pursuant to the terms of this Contract, the following types of insurance. Further, the contractor warrants such insurance coverage shall be written on an "occurrence" basis and will be obtained with the following minimum liability limits:

1. Workers' Compensation Insurance and Employer's Liability Insurance:

(1) State:	Statutory Limits
(2) Employer's Liability:	$100,000 per accident
	$500,000 Disease, Policy Limit
	$100,000 Disease, Each Employee

2. Comprehensive or Commercial General Liability Insurance which shall be endorsed to name the CITY OF MOSCOW. It shall include premises operation, owners and contractor's protective liability, products and completed operations liability, personal injury liability including employee acts, broad form property damage liability and blanket contractual liability, with no exclusion for explosion (X), collapse (C) and underground (U) hazards:

   (1) $1,000,000 Each Occurrence
   (2) $1,000,000 Personal Injury
   (3) $2,000,000 Products/Completed Operations to be maintained for one (1) year following final payment
   (4) $2,000,000 General Aggregate

3. Automobile Liability Insurance which shall be endorsed to name the CITY OF MOSCOW as an additional insured. It shall include for bodily injury and property damage: $1,000,000 Combined Single Limit

Property or Builder's Risk Insurance

If required by the owner, the contractor shall have in effect Property or Builder's Risk Insurance**.** The Property or Builder's Risk Insurance shall include coverage for all direct physical loss, also known as "Special Causes of Loss" in an amount equal to one-hundred percent (100%) of the estimated maximum value of the Project upon completion with the broadest form of "all risk" coverage possible.

Certification of Non-Segregated Facilities

For contracts in excess of $10,000, the contractor certifies that he/she does not maintain or provide for his/her employees any segregated facility at any of his/her establishments, and that he/she does not permit employees to perform their services at any location, under his/her control, where segregated facilities are maintained. He/she certifies further that he/she will not maintain or

provide for employees any segregated facilities at any of his/her establishments, and he/she will not permit employees to perform their services at any location under his/her control where segregated facilities are maintained.

The bidder, offeror, or subcontractor agrees that a breach of this certification is a violation of the Equal Opportunity Clause of this contract. As used in this certification, the term "segregated facilities" means any waiting rooms, work areas, rest rooms and wash rooms, restaurants and other eating areas, time clocks, locker rooms, and other storage or dressing areas, *transportation and housing facilities provided for employees which are segregated by explicit directive or are in fact segregated on the basis of race, color, religion, or national origin, because of habit, local custom, or otherwise. She/he further agrees that (except where she/he has obtained identical certifications from proposed subcontractors for specific time periods) she/he will obtain identical certification from proposed subcontractors prior to the award of subcontracts exceeding $10,000 which are not exempt from the provisions of the Equal Opportunity Clause; that she/he will forward the following notice to such proposed subcontractors (except where proposed subcontractors have submitted identical certifications for specific time periods). *Parking lots, drinking fountains, recreation or entertainment areas.

Data, Patent, and Copyright

The contractor shall hold and save the owner and its officers, agents, servants and employees harmless from liability of any nature or kind, including cost and expenses for, or on account of, any patented or unpatented invention, process, article or appliance manufactured or used in the performance of the contract, including its use by the owner, unless otherwise specifically stipulated in the contract documents.

Access to Records

The grantee, the federal grantor agency, the Comptroller General of the United States, the City of Moscow, or any of their duly authorized representatives, shall have access to any books, documents, papers, and records of the contractor which are directly pertinent to this specific contract, for the purpose of making audit, examination, excerpts, and transcriptions. All required records must be maintained by the contractor for three (3) years after grantee makes final payments and all other pending matters are closed. (24 CFR Part 85.36(i) (10))

Architectural Barrier Act

Any building designed, constructed or altered must be made accessible to persons with disabilities. Exceptions include (1) alterations where access cannot be provided, i.e. roofs, heating systems, water and sewer systems; (2) alterations are not structurally feasible; or (3) where Uniform Federal Accessibility Standards (UFAS) or Americans with Disabilities Act (ADA) requirements cannot be met according to undue hardship criteria. (42 USC 4151 et seq., 24 CFR Part 40 (UFAS), 24 CFR Part 8)

Lead Based Paint

For all residential new construction or rehabilitation, use of lead-based paint on any interior surface, whether accessible or inaccessible, and exterior surfaces readily accessible to children under seven (7) years of age is prohibited. *The surfaces of all existing structures must be inspected.*

If lead based paint is found on any interior surfaces or accessible surfaces, it must be treated and repainted with two (2) coats of non-lead paint; or completely removed; or covered with a suitable material such as gypsum wallboard, plywood or plaster. (42 USC 4801 et seq., 24 CFR Part 35)

Davis-Bacon and Related Acts
See Federal Labor Standards Provisions HUD Form 4010 within this document.

Copeland "Anti-Kickback" Act
See Federal Labor Standards Provisions HUD Form 4010 within this document.

Contract Work Hours and Safety Standards Act, Sections 103 and 107
See Federal Labor Standards Provisions HUD Form 4010 within this document.

Executive Order 11246: Equal Employment Opportunity

During the performance of this contract, the contractor agrees as follows:

1. The contractor will not discriminate against any employee or applicant for employment because of race, color, religion, sex, or national origin. The contractor will take affirmative action to ensure that applicants are employed, and that employees are treated during their employment without regard to their race, color, religion, sex, or national origin. Such action shall include, but not be limited to the following: *employment, upgrading, demotion, or transfer; recruitment or recruitment advertising; layoff or termination; rates of pay or other forms of compensation; and selection for training, including apprenticeship.* The contractor agrees to post in conspicuous places, available to employees and applicants for employment, notices to be provided setting forth the provisions of this nondiscrimination clause.

2. The contractor will, in all solicitations or advertisements for employees placed by or on behalf of the contractor, state that all qualified applicants will receive considerations for employment without regard to race, color, religion, sex, or national origin.

3. The contractor will send to each labor union or representative of workers with which he has a collective bargaining agreement or other contract or understanding, a notice to be provided advising the said labor union or workers' representatives of the contractor's commitments under this section, and shall post copies of the notice in conspicuous places available to employees and applicants for employment.

4. The contractor will comply with all provisions of Executive Order 11246 of September 24, 1965, and of the rules, regulations, and relevant orders of the Secretary of Labor.

5. The contractor will furnish all information and reports required by Executive Order 11246 of September 24, 1965, and by rules, regulations, and orders of the Secretary of Labor, or pursuant thereto, and will permit access to his books, records, and accounts by the administering agency and the Secretary of Labor for purposes of investigation to ascertain compliance with such rules, regulations, and orders.

6. In the event of the contractor's noncompliance with the nondiscrimination clauses of this contract or with any of the said rules, regulations, or orders, this contract may be canceled, terminated, or suspended in whole or part and the contractor may be declared ineligible for

further government contracts or federally assisted construction contracts in accordance with procedures authorized in Executive Order 11246 of September 24, 1965, and such other sanctions may be imposed and remedies invoked as provided in Executive Order 11246 of September 24, 1965, or by rule, regulation, or order of the Secretary of Labor, or as otherwise provided by law.

7. The contractor will include the portion of the sentence immediately preceding paragraph (1) and the provisions of paragraphs (1) through (7) in every subcontract or purchase order unless exempted by rules, regulations, or orders of the Secretary of Labor issued pursuant to section 204 of Executive Order 11246 of September 24, 1965, so that such provisions will be binding upon each subcontractor or vendor. The contractor will take such action with respect to any subcontract or purchase order as the administering agency may direct as a means of enforcing such provisions, including sanctions for noncompliance: Provided, however, that in the event a contractor becomes involved in, or is threatened with, litigation with a subcontractor or vendor as a result of such direction by the administering agency the contractor may request the United States to enter into such litigation to protect the interests of the United States.

8. The contractor agrees that it will assist and cooperate actively with the administering agency and the Secretary of Labor in obtaining the compliance of subcontractors with the equal opportunity clause and the rules, regulations, and relevant orders of the Secretary of Labor, that it will furnish the administering agency and the Secretary of Labor such information as they may require for the supervision of such compliance, and that it will otherwise assist the administering agency in the discharge of the agency's primary responsibility for securing compliance.

9. The contractor further agrees that it will refrain from entering into any contract or contract modification subject to Executive Order 11246 of September 24, 1965, with a contractor debarred from, or who has not demonstrated eligibility for, Government contracts and federally assisted construction contracts pursuant to the Executive order and will carry out such sanctions and penalties for violation of the equal opportunity clause as may be imposed upon contractors and subcontractors by the administering agency or the Secretary of Labor pursuant to Part II, Subpart D of the Executive order. In addition, the contractor agrees that if it fails or refuses to comply with these undertakings, the administering agency may take any or all of the following actions: Cancel, terminate, or suspend in whole or in part this grant (contract, loan, insurance, guarantee); refrain from extending any further assistance to the contractor under the program with respect to which the failure or refund occurred until satisfactory assurance of future compliance has been received from such contractor; and refer the case to the Department of Justice for appropriate legal proceedings.

A. APPLICABILITY

The Project or Program to which the construction work covered by this Contract pertains is being assisted by the United States of America, and the following Federal Labor Standards Provisions are included in this Contract pursuant to the provisions applicable to such Federal assistance.

(1) MINIMUM WAGES

(i) All laborers and mechanics employed or working upon the site of the work will be paid unconditionally and not less often than once a week, and without subsequent deduction or rebate on any account (except such payroll deductions as are permitted by regulations issued by the Secretary of Labor under the Copeland Act (29 CFR Part 3)), the full amount of wages and bona fide fringe benefits (or cash equivalents thereof) due at time of payment, computed at rates not less than those contained in the wage determination of the Secretary of Labor (which is attached hereto and made a part hereof), regardless of any contractual relationship which may be alleged to exist between the contractor and such laborers and mechanics. Contributions made or costs reasonably anticipated for bona fide fringe benefits under Section 1(b)(2) of the Davis-Bacon Act on behalf of laborers or mechanics are considered wages paid to such laborers or mechanics, subject to the provisions of 29 CFR 5.5(a)(1)(iv); also, regular contributions made or costs incurred for more than a weekly period (but not less often than quarterly) under plans, funds, or programs, which cover the particular weekly period, are deemed to be constructively made or incurred during such weekly period.

Such laborers and mechanics shall be paid the appropriate wage rate and fringe benefits on the wage determination for the classification of work actually performed, without regard to skill, except as provided in 29 CFR 5.5(a)(4). Laborers or mechanics performing work in more than one classification may be compensated at the rate specified for each classification for the time actually worked therein: Provided, that the employer's payroll records accurately set forth the time spent in each classification in which work is performed. The wage determination (including any additional classification and wage rates conformed under 29 CFR 5.5(a)(1)(ii) and the Davis-Bacon poster (WH1321)) shall be posted at all times by the contractor and its subcontractors at the site of the work in a prominent and accessible place, where it can be easily seen by the workers.

(ii) Additional Classifications.

(A) Any class of laborers or mechanics which is not listed in the wage determination and which is to be employed under the contract shall be classified in conformance with the wage determination. HUD shall approve an additional classification and wage rate and fringe benefits therefor only when the following criteria have been met:

(1) The work to be performed by the classification requested is not performed by a classification in the wage determination;

(2) The classification is utilized in the area by the construction industry; and

(3) The proposed wage rate, including any bona fide fringe benefits, bears a reasonable relationship to the wage rates contained in the wage determination.

(B) If the contractor, the laborers and mechanics to be employed in the classification (if known), or their representatives, and HUD or its designee agree on the proposed classification and wage rate (including the amount designated for fringe benefits, where appropriate), a report of the action taken shall be sent by HUD or its designee to the Administrator of the Wage and Hour Division ("Administrator"), Employment Standards Administration, U.S. Department of Labor, Washington, D.C. 20210. The Administrator, or an authorized representative, will approve, modify, or disapprove every additional classification action within 30 days of receipt and so advise HUD or its designee or will notify HUD or its designee within the 30-day period that additional time is necessary. (Approved by the Office of Management and Budget ("OMB") under OMB control number 1235-0023.)

(C) In the event the contractor, the laborers or mechanics to be employed in the classification or their representatives, or HUD or its designee do not agree on the proposed classification and wage rate (including the amount designated for fringe benefits, where appropriate), HUD or its designee shall refer the questions, including the views of all interested parties and the recommendation of HUD or its designee, to the Administrator for determination. The Administrator, or an authorized representative, will issue a determination within 30 days of receipt and so advise HUD or its designee or will notify HUD or its designee within the 30-day period that additional time is necessary. (Approved by the Office of Management and Budget under OMB Control Number 1235-0023.)

(D) The wage rate (including fringe benefits, where appropriate) determined pursuant to subparagraphs (1)(ii)(B) or (C) of this paragraph, shall be paid to all workers performing work in the classification under this Contract from the first day on which work is performed in the classification.

(iii) Whenever the minimum wage rate prescribed in the contract for a class of laborers or mechanics includes a fringe benefit which is not expressed as an hourly rate, the contractor shall either pay the benefit as stated in the wage determination or shall pay another bona fide fringe benefit or an hourly cash equivalent thereof.

(iv) If the contractor does not make payments to a trustee or other third person, the contractor may consider as part of the wages of any laborer or mechanic the amount of any costs reasonably anticipated in providing bona fide fringe benefits under a plan or program, Provided, that the Secretary of Labor has found, upon the written request of the contractor, that the applicable standards of the Davis-Bacon Act have been met. The Secretary of Labor may require the contractor to set aside in a separate account assets for the meeting of obligations under the plan or program. (Approved by the Office of Management and Budget under OMB Control Number 1235-0023.)

(2) Withholding. HUD or its designee shall, upon its own action or upon written request of an authorized representative of the U.S. Department of Labor, withhold or cause to be withheld from the contractor under this contract or any other Federal contract with the same prime contractor, or any other Federally-assisted contract subject to Davis-Bacon prevailing wage requirements which is held by the same prime contractor, so much of the accrued payments or advances as may be considered necessary to pay laborers and mechanics, including apprentices, trainees and helpers, employed by the contractor or any subcontractor the full amount of wages required by the contract. In the event of failure to pay any laborer or mechanic, including any apprentice, trainee or helper, employed or working on the site of the work, all or part of the wages required by the contract, HUD or its designee may, after written notice to the contractor, sponsor, applicant, or owner, take such action as may be necessary to cause the suspension of any further payment, advance, or guarantee of funds until such violations have ceased. HUD or its designee may, after written notice to the contractor, disburse such amounts withheld for and on account of the contractor or subcontractor to the respective employees to whom they are due. The Department of Labor shall make such disbursements in the case of direct Davis-Bacon Act contracts.

(3) Payrolls and basic records.

(i) Maintaining Payroll Records. Payrolls and basic records relating thereto shall be maintained by the contractor during the course of the work and preserved for a period of three years thereafter for all laborers and mechanics working at the site of the work. Such records shall contain the name, address, and social security number of each such worker, his or her correct classification(s), hourly rates of wages paid (including rates of contributions or costs anticipated for bona fide fringe benefits or cash equivalents thereof of the types described in Section 1(b)(2)(B) of the Davis-Bacon Act), daily and weekly number of hours worked, deductions made, and actual wages paid.

Whenever the Secretary of Labor has found, under 29 CFR 5.5(a)(1)(iv), that the wages of any laborer or mechanic include the amount of any costs reasonably anticipated in providing benefits under a plan or program described in Section 1(b)(2)(B) of the Davis-Bacon Act, the contractor shall maintain records which show that the commitment to provide such benefits is enforceable, that the plan or program is financially responsible, and that the plan or program has been communicated in writing to the laborers or mechanics affected, and records which show the costs anticipated or the actual cost incurred in providing such benefits.

Contractors employing apprentices or trainees under approved programs shall maintain written evidence of the registration of apprenticeship programs and certification of trainee programs, the registration of the apprentices and trainees, and the ratios and wage rates prescribed in the applicable programs. (Approved by the Office of Management and Budget under OMB Control Numbers 1235-0023 and 1215-0018)

(ii) Certified Payroll Reports.

(A) The contractor shall submit weekly, for each week in which any contract work is performed, a copy of all payrolls to HUD or its designee if the agency is a party to the contract, but if the agency is not such a party, the contractor will submit the payrolls to the applicant sponsor, or owner, as the case may be, for transmission to HUD or its designee. The payrolls submitted shall set out accurately and completely all of the information required to be maintained under 29 CFR 5.5(a)(3)(i), except that full social security numbers and home addresses shall not be included on weekly transmittals. Instead, the payrolls only need to include an individually identifying number for each employee (e.g., the last four digits of the employee's social security number). The required weekly payroll information may be submitted in any form desired. Optional Form WH-347 is available for this purpose from the Wage and Hour Division Web site at **https://www.dol.gov/agencies/whd/forms** or its successor site. The prime contractor is responsible for the submission of copies of payrolls by all subcontractors.

Contractors and subcontractors shall maintain the full social security number and current address of each covered worker, and shall provide them upon request to HUD or its designee if the agency is a party to the contract, but if the agency is not such a party, the contractor will submit the payrolls to the applicant sponsor, or owner, as the case may be, for transmission to HUD or its designee, the contractor, or the Wage and Hour Division of the U.S. Department of Labor for purposes of an investigation or audit of compliance with prevailing wage requirements. It is not a violation of this subparagraph for a prime contractor to require a subcontractor to provide addresses and social security numbers to the prime contractor for its own records, without weekly submission to HUD or its designee. (Approved by the Office of Management and Budget under OMB Control Number 1235-0008.)

(B) Each payroll submitted shall be accompanied by a "Statement of Compliance," signed by the contractor or subcontractor or his or her agent who pays or supervises the payment of the persons employed under the contract and shall certify the following:

(1) That the payroll for the payroll period contains the information required to be provided under 29 CFR 5.5(a)(3)(ii), the appropriate information is being maintained under 29 CFR 5.5(a)(3)(i), and that such information is correct and complete;

(2) That each laborer or mechanic (including each helper, apprentice, and trainee) employed on the contract during the payroll period has been paid the full weekly wages earned, without rebate, either directly or indirectly, and that no deductions have been made either directly or indirectly from the full wages earned, other than permissible deductions as set forth in 29 CFR Part 3;

(3) That each laborer or mechanic has been paid not less than the applicable wage rates and fringe benefits or cash equivalents for the classification of work performed, as specified in the applicable wage determination incorporated into the contract; and

(C) The weekly submission of a properly executed certification set forth on the reverse side of Optional Form WH-347 shall satisfy the requirement for submission of the "Statement of Compliance" required by subparagraph (a)(3)(ii)(b).

(D) The falsification of any of the above certifications may subject the contractor or subcontractor to civil or criminal prosecution under Section 1001 of Title 18 and Section 3729 of Title 31 of the United States Code.

(iii) The contractor or subcontractor shall make the records required under subparagraph (a)(3)(i) available for inspection, copying, or transcription by authorized representatives of HUD or its designee or the U.S. Department of Labor, and shall permit such representatives to interview employees during working hours on the job. If the contractor or subcontractor fails to submit the required records or to make them available, HUD or its designee may, after written notice to the contractor, sponsor, applicant, or owner, take such action as may be necessary to cause the suspension of any further payment, advance, or guarantee of funds. Furthermore, failure to submit the required records upon request or to make such records available may be grounds for debarment action pursuant to 29 CFR 5.12.

(4) Apprentices and Trainees.

(i) Apprentices. Apprentices will be permitted to work at less than the predetermined rate for the work they performed when they are employed pursuant to and individually registered in a bona fide apprenticeship program registered with the U.S. Department of Labor, Employment and Training Administration, Office of Apprenticeship Training, Employer and Labor Services, or with a State Apprenticeship Agency recognized by the Office, or if a person is employed in his or her first 90 days of probationary employment as an apprentice in such an apprenticeship program, who is not individually registered in the program, but who has been certified by the Office of Apprenticeship Training, Employer and Labor Services, or a State Apprenticeship Agency (where appropriate), to be eligible for probationary employment as an apprentice.

The allowable ratio of apprentices to journeymen on the job site in any craft classification shall not be greater than the ratio permitted to the contractor as to the entire work force under the registered program. Any worker listed on a payroll at an apprentice wage rate, who is not registered or otherwise employed as stated above, shall be paid not less than the applicable wage rate on the wage determination for the classification of work actually performed. In addition, any apprentice performing work on the job site in excess of the ratio permitted under the registered program shall be paid not less than the applicable wage rate on the wage determination for the work actually performed. Where a contractor is performing construction on a project in a locality other than that in which its program is registered, the ratios and wage rates (expressed in percentages of the journeyman's hourly rate) specified in the contractor's or subcontractor's registered program shall be observed.

Every apprentice must be paid at not less than the rate specified in the registered program for the apprentice's level of progress, expressed as a percentage of the journeymen hourly rate specified in the applicable wage determination. Apprentices shall be paid fringe benefits in accordance with the provisions of the apprenticeship program.

If the apprenticeship program does not specify fringe benefits, apprentices must be paid the full amount of fringe benefits listed on the wage determination for the applicable classification. If the Administrator determines that a different practice prevails for the applicable apprentice classification, fringe benefits shall be paid in accordance with that determination. In the event the Office of Apprenticeship Training, Employer and Labor Services, or a State Apprenticeship Agency recognized by the Office, withdraws approval of an apprenticeship program, the contractor will no longer be permitted to utilize apprentices at less than the applicable predetermined rate for the work performed until an acceptable program is approved.

(ii) **Trainees.** Except as provided in 29 CFR 5.16, trainees will not be permitted to work at less than the predetermined rate for the work performed, unless they are employed pursuant to and individually registered in a program which has received prior approval, evidenced by formal certification by the U.S. Department of Labor, Employment and Training Administration. The ratio of trainees to journeymen on the job site shall not be greater than permitted under the plan approved by the Employment and Training Administration. Every trainee must be paid at not less than the rate specified in the approved program for the trainee's level of progress, expressed as a percentage of the journeyman hourly rate specified in the applicable wage determination. Trainees shall be paid fringe benefits in accordance with the provisions of the trainee program. If the trainee program does not mention fringe benefits, trainees shall be paid the full amount of fringe benefits listed on the wage determination unless the Administrator of the Wage and Hour Division determines that there is an apprenticeship program associated with the corresponding journeyman wage rate on the wage determination which provides for less than full fringe benefits for apprentices. Any employee listed on the payroll at a trainee rate who is not registered and participating in a training plan approved by the Employment and Training Administration shall be paid not less than the applicable wage rate on the wage determination for the work actually performed.

In addition, any trainee performing work on the job site in excess of the ratio permitted under the registered program shall be paid not less than the applicable wage rate on the wage determination for the work actually performed. In the event the Employment and Training Administration withdraws approval of a training program, the contractor will no longer be permitted to utilize trainees at less than the applicable predetermined rate for the work performed until an acceptable program is approved.

(iii) **Equal employment opportunity.** The utilization of apprentices, trainees, and journeymen under 29 CFR Part 5 shall be in conformity with the equal employment opportunity requirements of Executive Order 11246, as amended, and 29 CFR Part 30.

(5) **Compliance with Copeland Act requirements.** The contractor shall comply with the requirements of 29 CFR Part 3, which are incorporated by reference in this Contract.

(6) **Subcontracts.** The contractor or subcontractor will insert in any subcontracts the clauses contained in subparagraphs (1) through (11) in this paragraph (a) and such other clauses as HUD or its designee may, by appropriate instructions, require, and a copy of the applicable prevailing wage decision, and also a clause requiring the subcontractors to include these clauses in any lower tier subcontracts. The prime contractor shall be responsible for the compliance by any subcontractor or lower tier subcontractor with all the contract clauses in this paragraph.

(7) **Contract termination; debarment.** A breach of the contract clauses in 29 CFR 5.5 may be grounds for termination of the contract and for debarment as a contractor and a subcontractor as provided in 29 CFR 5.12.

(8) **Compliance with Davis-Bacon and Related Act Requirements.** All rulings and interpretations of the Davis-Bacon and Related Acts contained in 29 CFR Parts 1, 3, and 5 are herein incorporated by reference in this Contract.

(9) **Disputes concerning labor standards.** Disputes arising out of the labor standards provisions of this Contract shall not be subject to the general disputes clause of this Contract. Such disputes shall be resolved in accordance with the procedures of the U.S. Department of Labor set forth in 29 CFR Parts 5, 6, and 7. Disputes within the meaning of this clause include disputes between the contractor (or any of its subcontractors) and HUD or its designee, the U.S. Department of Labor, or the employees or their representatives.

(10) **Certification of Eligibility.**

(i) By entering into this Contract, the contractor certifies that neither it (nor he or she) nor any person or firm who has an interest in the contractor's firm is a person or firm ineligible to be awarded Government contracts by virtue of Section 3(a) of the Davis-Bacon Act or 29 CFR 5.12(a)(1) or to be awarded HUD contracts or participate in HUD programs pursuant to 24 CFR Part 24.

(3) Withholding for unpaid wages and liquidated damages. HUD or its designee shall upon its own action or upon written request of an authorized representative of the Department of Labor withhold or cause to be withheld, from any moneys payable on account of work performed by the contractor or subcontractor under any such contract or any other Federal contract with the same prime contract, or any other Federally-assisted contract subject to the Contract Work Hours and Safety Standards Act which is held by the same prime contractor such sums as may be determined to be necessary to satisfy any liabilities of such contractor or subcontractor for unpaid wages and liquidated damages as provided in the clause set forth in subparagraph (2) of this paragraph.

(4) Subcontracts. The contractor or subcontractor shall insert in any subcontracts the clauses set forth in subparagraph (1) through (4) of this paragraph and also a clause requiring the subcontractors to include these clauses in any lower tier subcontracts. The prime contractor shall be responsible for compliance by any subcontractor or lower tier subcontractor with the clauses set forth in subparagraphs (1) through (4) of this paragraph.

C. Health and Safety. The provisions of this paragraph C are applicable where the amount of the prime contract exceeds $100,000.

(1) No laborer or mechanic shall be required to work in surroundings or under working conditions which are unsanitary, hazardous, or dangerous to his health and safety as determined under construction safety and health standards promulgated by the Secretary of Labor by regulation.

(2) The Contractor shall comply with all regulations issued by the Secretary of Labor pursuant to Title 29 Part 1926 and failure to comply may result in imposition of sanctions pursuant to the Contract Work Hours and Safety Standards Act, (Public Law 91-54, 83 Stat 96). 40 USC 3701 et seq.

(3) The contractor shall include the provisions of this paragraph in every subcontract so that such provisions will be binding on each subcontractor. The contractor shall take such action with respect to any subcontractor as the Secretary of Housing and Urban Development or the Secretary of Labor shall direct as a means of enforcing such provisions.

DAVIS BACON WAGE DECISION

The following Davis Bacon Wage Decision(s) apply to all labor activities performed on this project and are included in this Specification document:

CITY OF MOSCOW
EDA AWARD NO. 07-79-07731
SIXTH STREET BRIDGE REPLACEMENT PROJECT
MOSCOW, IDAHO

General Decision Number: ID2022065 03/11/2022

Superseded General Decision Number: ID20210065

State: Idaho

Construction Type: Heavy

Counties: Benewah, Clearwater, and Latah Counties in Idaho

General Decision Number: ID20220082 02/25/2022

Superseded General Decision Number: ID20210082

State: Idaho

Construction Type: Highway

Counties: Latah County in Idaho

"General Decision Number: ID20220065 03/11/2022

Superseded General Decision Number: ID20210065

State: Idaho

Construction Type: Heavy
HEAVY CONSTRUCTION, Including water and sewer line construction and heavy construction projects on treatment plants and industrial (power plants, manufacturing plants, processing plants, etc.) sites

Counties: Benewah, Clearwater and Latah Counties in Idaho.

Note: Contracts subject to the Davis-Bacon Act are generally required to pay at least the applicable minimum wage rate required under Executive Order 14026 or Executive Order 13658. Please note that these Executive Orders apply to covered contracts entered into by the federal government that are subject to the Davis-Bacon Act itself, but do not apply to contracts subject only to the Davis-Bacon Related Acts, including those set forth at 29 CFR 5.1(a)(2)-(60).

If the contract is entered into on or after January 30, 2022, or the contract is renewed or extended (e.g., an option is exercised) on or after January 30, 2022:	. Executive Order 14026 generally applies to the contract. . The contractor must pay all covered workers at least $15.00 per hour (or the applicable wage rate listed on this wage determination, if it is higher) for all hours spent performing on the contract in 2022.
If the contract was awarded on or between January 1, 2015 and January 29, 2022, and the contract is not renewed or extended on or after January 30, 2022:	. Executive Order 13658 generally applies to the contract. . The contractor must pay all covered workers at least $11.25 per hour (or the applicable wage rate listed on this wage determination, if it is higher) for all hours spent performing on that contract in 2022.

The applicable Executive Order minimum wage rate will be adjusted annually. If this contract is covered by one of the Executive Orders and a classification considered necessary for performance of work on the contract does not appear on this wage determination, the contractor must still submit a conformance request.

Additional information on contractor requirements and worker protections under the Executive Orders is available at https://www.dol.gov/agencies/whd/government-contracts.

Modification Number	Publication Date
0	01/07/2022
1	02/18/2022
2	02/25/2022
3	03/11/2022

* CARP0001-045 06/01/2021

	Rates	Fringes
CARPENTER (Form Work Only).....	$ 38.87	17.84

ELEC0073-011 01/01/2022

	Rates	Fringes
ELECTRICIAN.....	$ 39.55	19.68

ENGI0370-035 06/01/2018

	Rates	Fringes
POWER EQUIPMENT OPERATOR:		
Backhoe (45,000 gw & under), Cranes (25 tons & under), Drill (8 in bit and over		
GROUP 5.....	$ 28.76	15.95
Backhoe (45,000-110,000 gw), Crane (25-45 tons), Bulldozer (D-6 and over), Grader/Blade, Front-End Loader(4-8 yds), Paver, Scrapers (all)		
GROUP 6.....	$ 29.04	15.95
Backhoe (over 110,000 gw), Cranes (45-85 tons), Heavy Duty Mechanic, Front End Loader (8-10 yds)		
GROUP 7.....	$ 29.31	15.95
Bulldozer (up to D-6)		
GROUP 3.....	$ 28.44	15.95
Cranes (85 tons & over), Front End Loader (10 yds & over)		
GROUP 8.....	$ 30.41	15.95
Front End Loader (under 4 yds)		
GROUP 4.....	$ 28.60	15.95
Rollers (all)		
GROUP 1.....	$ 27.51	15.95

ZONE PAY:

ZONE CENTERS: SPOKANE, PASCO, LEWISTON
ZONE 1: 0-45 Miles: Free
ZONE 2: 45 Miles & Over: $2.00

BOOM PAY (ALL CRANES):

(A): 180'-250': $.50 over scale
(B): over 250': $.80 over scale

IRON0014-006 07/01/2020

	Rates	Fringes
IRONWORKER, REINFORCING AND STRUCTURAL	$ 30.10	34.59

LABO0238-028 06/01/2017

	Rates	Fringes
LABORER (PIPELINE ONLY)		
COMMON	$ 26.28	12.15

LABO0238-031 07/01/2019

	Rates	Fringes
LABORER		
Asphalt Includes Raker, Shoveler, Spreader, and Distributor		
Group 4	$ 28.48	13.00
Flagger		
Group 1A	$ 25.84	13.00

Zone Differential (Add to Zone 1 rates): Zone 2 - $2.00

BASE POINTS: Spokane

Zone 1: 0-45 radius miles from the main post office.
Zone 2: 45 radius miles and over from the main post office

PLAS0072-003 06/01/2021

BENEWAH, BONNER, BOUNDARY, CLEARWATER, IDAHO (NORTH OF THE 46TH PARALLEL), KOOTENAI, LATAH, LEWIS AND NEZ PERCE AND SHOSHONE COUNTIES

ZONE 1:

	Rates	Fringes
CEMENT MASON/CONCRETE FINISHER	$ 32.44	19.56

Zone Differential (Add to Zone 1 rate): Zone 2 - $2.00

BASE POINTS: Spokane, Pasco, Lewiston, Wenatchee

Zone 1: 0-45 radius miles from the main post office

Zone 2: Over 45 radius miles from the main post office

PLUM0044-015 06/01/2019

	Rates	Fringes
PLUMBER		
Zone 1	$ 37.71	23.44

TEAM0690-002 06/01/2020

	Rates	Fringes

TRUCK DRIVER (DUMP)
6 yds and under.....$ 28.79 18.15
over 6 yds.....$ 29.23 18.15

SUID2010-058 08/08/2012

	Rates	Fringes
CARPENTER, Excludes Form Work....	$ 29.92	5.20
LABORER: Common or General.....	$ 23.75	8.98
LABORER: Landscape.....	$ 22.13	11.13
LABORER: Pipelayer.....	$ 17.67	7.26
OPERATOR: Bobcat/Skid Steer/Skid Loader.....	$ 20.97	0.00
OPERATOR: Concrete Batch Plant.....	$ 24.94	11.96
OPERATOR: Forklift.....	$ 21.20	0.00
TRUCK DRIVER: Lowboy Truck.....	$ 21.00	12.10
TRUCK DRIVER: Water Truck.....	$ 24.48	11.67

WELDERS - Receive rate prescribed for craft performing operation to which welding is incidental.

==========

Note: Executive Order (EO) 13706, Establishing Paid Sick Leave for Federal Contractors applies to all contracts subject to the Davis-Bacon Act for which the contract is awarded (and any solicitation was issued) on or after January 1, 2017. If this contract is covered by the EO, the contractor must provide employees with 1 hour of paid sick leave for every 30 hours they work, up to 56 hours of paid sick leave each year. Employees must be permitted to use paid sick leave for their own illness, injury or other health-related needs, including preventive care; to assist a family member (or person who is like family to the employee) who is ill, injured, or has other health-related needs, including preventive care; or for reasons resulting from, or to assist a family member (or person who is like family to the employee) who is a victim of, domestic violence, sexual assault, or stalking. Additional information on contractor requirements and worker protections under the EO is available at
https://www.dol.gov/agencies/whd/government-contracts.

Unlisted classifications needed for work not included within the scope of the classifications listed may be added after award only as provided in the labor standards contract clauses (29CFR 5.5 (a) (1) (ii)).

The body of each wage determination lists the classification and wage rates that have been found to be prevailing for the

cited type(s) of construction in the area covered by the wage determination. The classifications are listed in alphabetical order of ""identifiers"" that indicate whether the particular rate is a union rate (current union negotiated rate for local), a survey rate (weighted average rate) or a union average rate (weighted union average rate).

Union Rate Identifiers

A four letter classification abbreviation identifier enclosed in dotted lines beginning with characters other than ""SU"" or ""UAVG"" denotes that the union classification and rate were prevailing for that classification in the survey. Example: PLUM0198-005 07/01/2014. PLUM is an abbreviation identifier of the union which prevailed in the survey for this classification, which in this example would be Plumbers. 0198 indicates the local union number or district council number where applicable, i.e., Plumbers Local 0198. The next number, 005 in the example, is an internal number used in processing the wage determination. 07/01/2014 is the effective date of the most current negotiated rate, which in this example is July 1, 2014.

Union prevailing wage rates are updated to reflect all rate changes in the collective bargaining agreement (CBA) governing this classification and rate.

Survey Rate Identifiers

Classifications listed under the ""SU"" identifier indicate that no one rate prevailed for this classification in the survey and the published rate is derived by computing a weighted average rate based on all the rates reported in the survey for that classification. As this weighted average rate includes all rates reported in the survey, it may include both union and non-union rates. Example: SULA2012-007 5/13/2014. SU indicates the rates are survey rates based on a weighted average calculation of rates and are not majority rates. LA indicates the State of Louisiana. 2012 is the year of survey on which these classifications and rates are based. The next number, 007 in the example, is an internal number used in producing the wage determination. 5/13/2014 indicates the survey completion date for the classifications and rates under that identifier.

Survey wage rates are not updated and remain in effect until a new survey is conducted.

Union Average Rate Identifiers

Classification(s) listed under the UAVG identifier indicate that no single majority rate prevailed for those classifications; however, 100% of the data reported for the classifications was union data. EXAMPLE: UAVG-OH-0010 08/29/2014. UAVG indicates that the rate is a weighted union average rate. OH indicates the state. The next number, 0010 in the example, is an internal number used in producing the wage determination. 08/29/2014 indicates the survey completion date for the classifications and rates under that identifier.

A UAVG rate will be updated once a year, usually in January of each year, to reflect a weighted average of the current negotiated/CBA rate of the union locals from which the rate is based.

WAGE DETERMINATION APPEALS PROCESS

1.) Has there been an initial decision in the matter? This can be:

* an existing published wage determination
* a survey underlying a wage determination
* a Wage and Hour Division letter setting forth a position on a wage determination matter
* a conformance (additional classification and rate) ruling

On survey related matters, initial contact, including requests for summaries of surveys, should be with the Wage and Hour National Office because National Office has responsibility for the Davis-Bacon survey program. If the response from this initial contact is not satisfactory, then the process described in 2.) and 3.) should be followed.

With regard to any other matter not yet ripe for the formal process described here, initial contact should be with the Branch of Construction Wage Determinations. Write to:

Branch of Construction Wage Determinations
Wage and Hour Division
U.S. Department of Labor
200 Constitution Avenue, N.W.
Washington, DC 20210

2.) If the answer to the question in 1.) is yes, then an interested party (those affected by the action) can request review and reconsideration from the Wage and Hour Administrator (See 29 CFR Part 1.8 and 29 CFR Part 7). Write to:

Wage and Hour Administrator
U.S. Department of Labor
200 Constitution Avenue, N.W.
Washington, DC 20210

The request should be accompanied by a full statement of the interested party's position and by any information (wage payment data, project description, area practice material, etc.) that the requestor considers relevant to the issue.

3.) If the decision of the Administrator is not favorable, an interested party may appeal directly to the Administrative Review Board (formerly the Wage Appeals Board). Write to:

Administrative Review Board
U.S. Department of Labor
200 Constitution Avenue, N.W.
Washington, DC 20210

4.) All decisions by the Administrative Review Board are final.

==========

END OF GENERAL DECISIO"

"General Decision Number: ID20220082 02/25/2022

Superseded General Decision Number: ID20210082

State: Idaho

Construction Type: Highway

County: Latah County in Idaho.

HIGHWAY CONSTRUCTION PROJECTS

Note: Contracts subject to the Davis-Bacon Act are generally required to pay at least the applicable minimum wage rate required under Executive Order 14026 or Executive Order 13658. Please note that these Executive Orders apply to covered contracts entered into by the federal government that are subject to the Davis-Bacon Act itself, but do not apply to contracts subject only to the Davis-Bacon Related Acts, including those set forth at 29 CFR 5.1(a)(2)-(60).

If the contract is entered into on or after January 30, 2022, or the contract is renewed or extended (e.g., an option is exercised) on or after January 30, 2022:	. Executive Order 14026 generally applies to the contract. . The contractor must pay all covered workers at least $15.00 per hour (or the applicable wage rate listed on this wage determination, if it is higher) for all hours spent performing on the contract in 2022.
If the contract was awarded on or between January 1, 2015 and January 29, 2022, and the contract is not renewed or extended on or after January 30, 2022:	. Executive Order 13658 generally applies to the contract. . The contractor must pay all covered workers at least $11.25 per hour (or the applicable wage rate listed on this wage determination, if it is higher) for all hours spent performing on that contract in 2022.

The applicable Executive Order minimum wage rate will be adjusted annually. If this contract is covered by one of the Executive Orders and a classification considered necessary for performance of work on the contract does not appear on this wage determination, the contractor must still submit a conformance request.

Additional information on contractor requirements and worker protections under the Executive Orders is available at https://www.dol.gov/agencies/whd/government-contracts.

Modification Number	Publication Date
0	01/07/2022
1	02/25/2022

PLAS0072-001 06/01/2021

ZONE 1:

	Rates	Fringes
CEMENT MASON/CONCRETE FINISHER	$ 32.44	19.56

Zone Differential (Add to Zone 1 rate): Zone 2 - $2.00

BASE POINTS: Spokane, Pasco, Lewiston, Wenatchee

Zone 1: 0-45 radius miles from the main post office

Zone 2: Over 45 radius miles from the main post office

SUID2013-010 06/17/2013

	Rates	Fringes
CARPENTER (Form Work Only)	$ 26.57	8.10
ELECTRICIAN	$ 26.83	11.94
HIGHWAY/PARKING LOT STRIPING: Painter	$ 23.80	6.67
LABORER: Asphalt, Includes Raker, Shoveler, Spreader and Distributor	$ 22.86	9.40
LABORER: Common or General	$ 22.92	10.01
LABORER: Concrete Saw (Hand Held/Walk Behind)	$ 23.98	11.05
LABORER: Grade Checker	$ 23.41	10.78
LABORER: Mason Tender - Cement/Concrete	$ 23.52	10.39
OPERATOR: Backhoe/Excavator/Trackhoe	$ 25.97	10.95
OPERATOR: Bobcat/Skid Steer/Skid Loader	$ 25.35	11.55
OPERATOR: Broom/Sweeper	$ 26.82	11.55
OPERATOR: Bulldozer	$ 25.73	11.51
OPERATOR: Crane	$ 27.18	10.97
OPERATOR: Crusher	$ 25.06	9.23
OPERATOR: Grader/Blade	$ 26.00	10.30
OPERATOR: Hydroseeder	$ 24.76	11.51
OPERATOR: Loader	$ 25.76	10.31
OPERATOR: Mechanic	$ 26.00	9.93
OPERATOR: Oiler	$ 25.66	9.23

OPERATOR: Paver (Asphalt, Aggregate, and Concrete).....$ 25.66 11.03

OPERATOR: Roller (Subgrade).....$ 22.24 8.57

OPERATOR: Roller.....$ 25.49 11.55

OPERATOR: Rotomill.....$ 29.78 4.52

OPERATOR: Screed.....$ 25.71 11.55

TRAFFIC CONTROL: Flagger.....$ 21.46 10.12

TRAFFIC CONTROL: Laborer-Cones/ Barricades/Barrels - Setter/Mover/Sweeper.....$ 22.66 10.90

TRUCK DRIVER: Dump Truck.....$ 23.40 10.75

TRUCK DRIVER: Lowboy Truck.....$ 22.12 13.20

TRUCK DRIVER: Oil Distributor Truck.....$ 22.54 12.35

TRUCK DRIVER: Water Truck.....$ 23.12 10.75

WELDERS - Receive rate prescribed for craft performing operation to which welding is incidental.

==========

Note: Executive Order (EO) 13706, Establishing Paid Sick Leave for Federal Contractors applies to all contracts subject to the Davis-Bacon Act for which the contract is awarded (and any solicitation was issued) on or after January 1, 2017. If this contract is covered by the EO, the contractor must provide employees with 1 hour of paid sick leave for every 30 hours they work, up to 56 hours of paid sick leave each year. Employees must be permitted to use paid sick leave for their own illness, injury or other health-related needs, including preventive care; to assist a family member (or person who is like family to the employee) who is ill, injured, or has other health-related needs, including preventive care; or for reasons resulting from, or to assist a family member (or person who is like family to the employee) who is a victim of, domestic violence, sexual assault, or stalking. Additional information on contractor requirements and worker protections under the EO is available at https://www.dol.gov/agencies/whd/government-contracts.

Unlisted classifications needed for work not included within the scope of the classifications listed may be added after award only as provided in the labor standards contract clauses (29CFR 5.5 (a) (1) (ii)).

The body of each wage determination lists the classification and wage rates that have been found to be prevailing for the cited type(s) of construction in the area covered by the wage

determination. The classifications are listed in alphabetical order of ""identifiers"" that indicate whether the particular rate is a union rate (current union negotiated rate for local), a survey rate (weighted average rate) or a union average rate (weighted union average rate).

Union Rate Identifiers

A four letter classification abbreviation identifier enclosed in dotted lines beginning with characters other than ""SU"" or ""UAVG"" denotes that the union classification and rate were prevailing for that classification in the survey. Example: PLUM0198-005 07/01/2014. PLUM is an abbreviation identifier of the union which prevailed in the survey for this classification, which in this example would be Plumbers. 0198 indicates the local union number or district council number where applicable, i.e., Plumbers Local 0198. The next number, 005 in the example, is an internal number used in processing the wage determination. 07/01/2014 is the effective date of the most current negotiated rate, which in this example is July 1, 2014.

Union prevailing wage rates are updated to reflect all rate changes in the collective bargaining agreement (CBA) governing this classification and rate.

Survey Rate Identifiers

Classifications listed under the ""SU"" identifier indicate that no one rate prevailed for this classification in the survey and the published rate is derived by computing a weighted average rate based on all the rates reported in the survey for that classification. As this weighted average rate includes all rates reported in the survey, it may include both union and non-union rates. Example: SULA2012-007 5/13/2014. SU indicates the rates are survey rates based on a weighted average calculation of rates and are not majority rates. LA indicates the State of Louisiana. 2012 is the year of survey on which these classifications and rates are based. The next number, 007 in the example, is an internal number used in producing the wage determination. 5/13/2014 indicates the survey completion date for the classifications and rates under that identifier.

Survey wage rates are not updated and remain in effect until a new survey is conducted.

Union Average Rate Identifiers

Classification(s) listed under the UAVG identifier indicate that no single majority rate prevailed for those classifications; however, 100% of the data reported for the classifications was union data. EXAMPLE: UAVG-OH-0010 08/29/2014. UAVG indicates that the rate is a weighted union average rate. OH indicates the state. The next number, 0010 in the example, is an internal number used in producing the wage determination. 08/29/2014 indicates the survey completion date for the classifications and rates under that identifier.

A UAVG rate will be updated once a year, usually in January of each year, to reflect a weighted average of the current negotiated/CBA rate of the union locals from which the rate is based.

WAGE DETERMINATION APPEALS PROCESS

1.) Has there been an initial decision in the matter? This can be:

* an existing published wage determination
* a survey underlying a wage determination
* a Wage and Hour Division letter setting forth a position on a wage determination matter
* a conformance (additional classification and rate) ruling

On survey related matters, initial contact, including requests for summaries of surveys, should be with the Wage and Hour National Office because National Office has responsibility for the Davis-Bacon survey program. If the response from this initial contact is not satisfactory, then the process described in 2.) and 3.) should be followed.

With regard to any other matter not yet ripe for the formal process described here, initial contact should be with the Branch of Construction Wage Determinations. Write to:

Branch of Construction Wage Determinations
Wage and Hour Division
U.S. Department of Labor
200 Constitution Avenue, N.W.
Washington, DC 20210

2.) If the answer to the question in 1.) is yes, then an interested party (those affected by the action) can request review and reconsideration from the Wage and Hour Administrator (See 29 CFR Part 1.8 and 29 CFR Part 7). Write to:

Wage and Hour Administrator
U.S. Department of Labor
200 Constitution Avenue, N.W.
Washington, DC 20210

The request should be accompanied by a full statement of the interested party's position and by any information (wage payment data, project description, area practice material, etc.) that the requestor considers relevant to the issue.

3.) If the decision of the Administrator is not favorable, an interested party may appeal directly to the Administrative Review Board (formerly the Wage Appeals Board). Write to:

Administrative Review Board
U.S. Department of Labor
200 Constitution Avenue, N.W.
Washington, DC 20210

4.) All decisions by the Administrative Review Board are final.

==========

END OF GENERAL DECISIO"

POST THIS ON JOB SITE WITH WAGE DECISION(S)

EMPLOYEE RIGHTS
UNDER THE DAVIS-BACON ACT

FOR LABORERS AND MECHANICS EMPLOYED ON FEDERAL OR FEDERALLY ASSISTED CONSTRUCTION PROJECTS

THE UNITED STATES DEPARTMENT OF LABOR WAGE AND HOUR DIVISION

PREVAILING WAGES	You must be paid not less than the wage rate listed in the Davis-Bacon Wage Decision posted with this Notice for the work you perform.
OVERTIME	You must be paid not less than one and one-half times your basic rate of pay for all hours worked over 40 in a work week. There are few exceptions.
ENFORCEMENT	Contract payments can be withheld to ensure workers receive wages and overtime pay due, and liquidated damages may apply if overtime pay requirements are not met. Davis-Bacon contract clauses allow contract termination and debarment of contractors from future federal contracts for up to three years. A contractor who falsifies certified payroll records or induces wage kickbacks may be subject to civil or criminal prosecution, fines and/or imprisonment.
APPRENTICES	Apprentice rates apply only to apprentices properly registered under approved Federal or State apprenticeship programs.
PROPER PAY	If you do not receive proper pay, or require further information on the applicable wages, contact the Contracting Officer listed below:

or contact the U.S. Department of Labor's Wage and Hour Division.

For additional information:

1-866-4-USWAGE

(1-866-487-9243) TTY: 1-877-889-5627

WHD U.S. Wage and Hour Division

WWW.WAGEHOUR.DOL.GOV

U.S. Department of Labor | Employment Standards Administration | Wage and Hour Division

WH 1321 (Revised April 2009)

DERECHOS DEL EMPLEADO

BAJO LA LEY DAVIS-BACON

PARA OBREROS Y MECÁNICOS EMPLEADOS EN PROYECTOS DE CONSTRUCCIÓN FEDERAL O CON ASISTENCIA FEDERAL

LA SECCIÓN DE HORAS Y SUELDOS DEL DEPARTAMENTO DE TRABAJO DE EEUU

SALARIOS PREVALECIENTES No se le puede pagar menos de la tasa de pago indicada en la Decisión de Salarios Davis-Bacon fijada con este Aviso para el trabajo que Ud. desempeña.

SOBRETIEMPO Se le ha de pagar no menos de tiempo y medio de su tasa básica de pago por todas las horas trabajadas en exceso de 40 en una semana laboral. Existen pocas excepciones.

CUMPLIMIENTO Se pueden retener pagos por contratos para asegurarse que los obreros reciban los salarios y el pago de sobretiempo debidos, y se podría aplicar daños y perjuicios si no se cumple con las exigencias del pago de sobretiempo. Las cláusulas contractuales de Davis-Bacon permiten la terminación y exclusión de contratistas para efectuar futuros contratos federales hasta tres años. El contratista que falsifique los registros certificados de las nóminas de pago o induzca devoluciones de salarios puede ser sujeto a procesamiento civil o criminal, multas y/o encarcelamiento.

APRENDICES Las tasas de aprendices sólo se aplican a aprendices correctamente inscritos bajo programas federales o estatales aprobados.

PAGO APROPIADO Si Ud. no recibe el pago apropiado, o precisa de información adicional sobre los salarios aplicables, póngase en contacto con el Contratista Oficial que aparece abajo:

o póngase en contacto con la Sección de Horas y Sueldos del Departamento de Trabajo de EEUU.

Para obtener información adicional:

1-866-4-USWAGE

(1-866-487-9243) TTY: 1-877-889-5627

WWW.WAGEHOUR.DOL.GOV

WHD U.S. Wage and Hour Division

U.S. Department of Labor | Employment Standards Administration | Wage and Hour Division

WH 1321 SPA (Revised April 2009)

CITY OF MOSCOW
EDA AWARD NO. 07-79-07731
SIXTH STREET BRIDGE REPLACEMENT PROJECT
MOSCOW, IDAHO

See pages 44 through 52 for examples of how to complete payroll forms.

HOW TO COMPLETE PAYROLL FORMS
(Front Section)

For Subcontractors only:
Enter IRS number on first payroll.
Check correct box.

U.S. DEPARTMENT OF LABOR
Wage and Hour Division

PAYROLL

OMB No.: 1235-0008
Expires 04/30/2018

IRS# 24169475

NAME OF CONTRACTOR ☒ OR SUBCONTRACTOR ☐		ADDRESS	
ABC Construction		Moscow, Idaho	
PAYROLL NO.	FOR WEEK ENDING	PROJECT AND LOCATION	PROJECT OR CONTRACT NO.
12 Final	July 9, 2019	City of Moscow	

Payrolls must be numbers sequentially. Write the work "Final" after the number on you last payroll.

Enter days of week work was performed.

RATE OF PAY (Column 6)

- Straight Time: Include fringe amount ONLY IF YOU PAY ALL OR PART IN CASH. (See back of payroll if you pay fringe amount to plan, fund or program.
- Overtime: is calculated at (1 ½ x base) + fringe. Include fringe amount in this column ONLY IF YOU PAY ALL OR PART IN CASH. (See back of payroll if fringe amount paid to plan, etc.)

Specify

- Type of deduction
- Total deduction withheld

(1) NAME AND IDENTIFICATION NUMBER OF EMPLOYEE	NO. OF WITHHOLDING EXEMPTIONS	(3) WORK CLASSIFICATION	OT. OR ST.	(4) DAY AND DATE S 10	M 11	T 12	W 13	T 14	F 15	S 16	(5) TOTAL HOURS	(6) RATE OF PAY	(7) GROSS AMOUNT EARNED	(8) DEDUCTIONS FICA	WITH-HOLDING TAX	State Tax	Medi cal	OTHER	TOTAL DEDUCTIONS	(9) NET WAGES PAID FOR WEEK
				HOURS WORKED EACH DAY																
Carson Wentz #1256	1	Electrician	O						10		10	15.00	555.00	42.00	36.24	4.50	2.60	1.31	86.67	464.33
			S		10	10	10	10			40	10.00								

Identification # required:

- The first time the workers name appears on the payroll.

Fill in the classification EXACTLY as it appears on the determination.

If classification is for a power equipment operator, indicate type, size, horsepower

OVERTIME

- Hours on this project contracted exceeding 40 per week.

STRAIGHT TIME

- Hours worked on this contract up to 40/wk

Enter gross, each deduction and net. Check your figures. Subtract the total amounts withheld from the total gross. The result should equal the total in Column 9.

Section must be fully completed.

List **ALL** deductions subtracted from wages

Write in names of trades benefits

Include type of benefit payment:

List exceptions to (a) or (b) by Craft or employees affected. See Payroll Instructions, "Use of Section 4(c) Exceptions," for additional information.

Signature must be in ink, original—no stamps or Xerox. Must be signed by owner or employee authorized by owner to sign.

Date _____

I, _____ _____
(Name of signatory party) (Title)

do hereby state:

(1) That I pay or supervise the payment of the persons employed by

_____ on the
(Contractor or subcontractor)

_____; that during the payroll period commencing on the
(Building or work)

____ day of _____, 20_____, and ending the 16 day of _____, 20_____, all persons employed on said project have been paid the full weekly wages earned, that no rebates have been or will be made either directly or indirectly to or on behalf of said

_____ from the full
(Contractor or subcontractor)

weekly wages earned by any person and that no deductions have been made either directly or indirectly from the full wages earned by any person, other than permissible deductions as defined in Regulations, Part 3 (29 CFR Subtitle A), issued by the Secretary of Labor under the Copeland Act, as amended (48 Stat. 948, 52 Stat. 108, 72 Stat. 967, 76 Stat. 357; 40 U.S.C. 276c), and described below:

_____

_____

_____

_____

(2) That any payrolls otherwise under this contract required to be submitted for the above period are correct and complete; that the wage rates for laborers or mechanics contained therein are not less than the applicable wage rates contained in any wage determination incorporated into the contract; that the classifications set forth therein for each laborer or mechanic conform with the work he performed.

(3) That any apprentices employed in the above period are duly registered in a bona fide apprenticeship program registered with a State apprenticeship agency recognized by the Bureau of Apprenticeship and Training, United States Department of Labor, or if no such recognized agency exists in a State, are registered with the Bureau of Apprenticeship and Training, United States Department of Labor.

(4) That:

(a) WHERE FRINGE BENEFITS ARE PAID TO APPROVED PLANS, FUNDS, OR PROGRAMS

-In addition to the basic hourly wage rates paid to each laborer or mechanic listed in the above referenced payroll, payments of fringe benefits as listed in the contract have been or will be made to appropriate programs for the benefit of such employees, except as noted in Section 4(c) below.

(b) WHERE FRINGE BENEFITS ARE PAID IN CASH

-Each laborer or mechanic listed in the above referenced payroll has been paid, as indicated on the payroll, an amount not less than the sum of the applicable basic hourly wage rate plus the amount of the required fringe benefits as listed in the contract, except as noted in Section 4(c) below.

(c) EXCEPTIONS

EXCEPTION (CRAFT)	EXPLANATION

REMARKS

NAME AND TITLE	SIGNATURE

THE WILFUL FALSIFICATION OF ANY OF THE ABOVE STATEMENTS MAY SUBJECT THE CONTRACTOR OR SUBCONTRACTOR TO CIVIL OR CRIMINAL PROSECUTION. SEE SECTION 1001 OF TITLE 18 AND SECTION 231 OF TITLE 31 OF THE UNITED STATES CODE.

(a) Required fringe amount paid to approved plans, funds or programs (be sure to include payment for overtime worked). Include with first payroll a copy of the plan, fund or program and documentation that the required amounts were paid into plan, etc.

OR

(b) Required fringe amount paid in cash (above right)

NOTE: If fringe amount is paid in part to approved plan, fund or program and part in cash, see Payroll Instructions, "Use of (4)(c) Exceptions.

HOW TO REPORT: *** Apprentice Wages**
*** Overtime involving contract work hours and safety standards act when employee works on multiple federal projects.**

U.S. DEPARTMENT OF LABOR

Wage and Hour Division

PAYROLL

OMB No.: 1215-0008
Expires 04/30/2018

NAME OF CONTRACTOR ☒ OR SUBCONTRACTOR ☐	ADDRESS
ABC Construction	Moscow, Idaho

PAYROLL NO.	FOR WEEK ENDING	PROJECT AND LOCATION	PROJECT OR CONTRACT NO.
11	July 9, 2019	City of Moscow	

(1) NAME AND IDENTIFICATION NUMBER OF EMPLOYEE	NO. OF WITHHOLDING EXEMPTIONS	(3) WORK CLASSIFICATION	OT. OR ST.	(4) DAY AND DATE S 3	M 4	T 5	W 6	T 7	F 8	S 9	(5) TOTAL HOURS	(6) RATE OF PAY	(7) GROSS AMOUNT EARNED	(8) DEDUCTIONS FICA	WITH-HOLDING TAX	Health	IRA	OTHER (Union Dues)	TOTAL DEDUCTIONS	(9) NET WAGES PAID FOR WEEK
				HOURS WORKED EACH DAY																
Allen Robinson	1	Apprentice Carpenter 1st 6 mo. 40%	O										107.04	7.69	12.60	2.62	1.31	1.26	25.47	117.32
			S		4			8	8		20	5.35								
			O																	
			S																	
Mitchell Trubisky	2	Carpenter	O						8	8		20.07	160.56	34.00	75.00	9.00	6.47	4.20	125.61	342.23
			S									13.38								
			O																	
			S																	

Allen Robinson

- Shows apprentice classification
- Shows step percentage
- Attach copy of registration in approved DOL program with first payroll.

Mitchell Trubisky

- Although Staunton only worked 8 hours on this contract, he is entitled to 8 hours overtime. That is because Staunton worked 40 hours on other federally funded project this week.

HOW TO REPORT: *** Times and wages if employee works more than one classification during the week.**
*** When an employee moves.**

U.S. DEPARTMENT OF LABOR
Wage and Hour Division

PAYROLL

OMB No.: 1235-0008
Expires 04/30/2018

NAME OF CONTRACTOR ☒ OR SUBCONTRACTOR ☐			ADDRESS
ABC Construction			Moscow, Idaho
PAYROLL NO. 11	FOR WEEK ENDING July 9, 2019	PROJECT AND LOCATION City of Moscow	PROJECT OR CONTRACT NO.

(1) NAMEAND IDENTIFICATION NUMBER OF EMPLOYEE	NO. OF WITHHOLDING EXEMPTIONS	(3) WORK CLASSIFICATION	OT. OR ST.	(4) DAY AND DATE S 3	M 4	T 5	W 6	T 7	F 8	S 9	(5) TOTAL HOURS	(6) RATE OF PAY	(7) GROSS AMOUNT EARNED	(8) DEDUCTIONS FICA	WITH-HOLDING TAX	Health	IRA	OTHER (Union Dues)	TOTAL DEDUCTIONS	(9) NET WAGES PAID FOR WEEK
				HOURS WORKED EACH DAY																
Matthew Stafford	1	Carpenter	O										242.56	24.43	74.80	8.35	4.18	5.25	117.01	300.59
			S		8	8	4		3		23	8.92								
Matthew Stafford	1	General Laborer	O						1		1	10.20								
			S				4				4	6.80								
Jamaal Charles	2	Carpenter	O										356.80	20.87	54.50	7.14	3.57	3.20	89.28	267.52
			S		8	8	8	8	8		40	8.92								

Matthew Stafford

- Since Stafford worked at more than one classification during the week:
- Use 2 lines, one for each classification
- Gross amount earned can be totaled and entered on one line

HOW TO REPORT: *** Working Subcontractor**
*** Owner Working with Employees.**

U.S. DEPARTMENT OF LABOR
Wage and Hour Division

PAYROLL

OMB No.: 1235-0008
Expires 04/30/2018

NAME OF CONTRACTOR ☒ OR SUBCONTRACTOR ☐			ADDRESS	
ABC Construction			Moscow, Idaho	
PAYROLL NO.	FOR WEEK ENDING		PROJECT AND LOCATION	PROJECT OR CONTRACT NO.
1 - Initial	July 9, 2019		City of Moscow	

(1) NAME,AND IDENTIFICATION NUMBER OF EMPLOYEE	NO. OF WITHHOLDING EXEMPTIONS	(3) WORK CLASSIFICATION	OT. OR ST.	(4) DAY AND DATE S 3	M 4	T 5	W 6	T 7	F 8	S 9	(5) TOTAL HOURS	(6) RATE OF PAY	(7) GROSS AMOUNT EARNED	(8) DEDUCTIONS FICA	WITH-HOLDING TAX	Health	IRA	OTHER (Union Dues)	TOTAL DEDUCTIONS	(9) NET WAGES PAID FOR WEEK
				HOURS WORKED EACH DAY																
Walter Payton #4567	2	Carpenter	O										940.00	82.00	75.00	60.			217.00	723.00
			S		8	8	8	8	8		40	23.50								
Travis Kelce #9876	1	Carpenter	O										940.00	82.00	75.00	60.			217.00	723.00
			S		8	8	8	8	8		40	23.50								
Antonio Brown #3456	2	Painter	O											Self Employed Public Works License #05461						
			S																	

- Working Subcontractor
  - Report on payroll of whomever hires him or her

Cam Newton #7890	1	Carpenter	O												Owner					
			S		8	8	8	8	8		40									
Wes Welker #4567	2	Carpenter	O										940.00	82.00	75.00	60.			217.00	723.00
			S		8	8	8	8	8		40	23.50								
Russell Wilson #1065	1	Carpenter	O										940.00	82.00	75.00	60.			217.00	723.00
			S		8	8	8	8	8		40	23.50								

Instructions for Payroll Form WH-347
Grant Funded Projects

General: Form WH-347 has been made available for the convenience of contractors and subcontractors required by their Federal or Federally-aided construction-type contracts and subcontracts to submit weekly payrolls. Properly filled out, this form will satisfy the requirements of Regulations, Parts 3 and 5 (29 C.F.R., Subtitle A), as to payrolls submitted in connection with contracts subject to the Davis-Bacon and related Acts.

While completion of Form WH-347 is optional, it is mandatory for covered contractors and subcontractors performing work on Federally financed or assisted construction contracts to respond to the information collection contained in 29 C.F.R. §§ 3.3,5.5(a). The Copeland Act (40 U.S.C § 3145) requires contractors and subcontractors performing work on Federally financed or assisted construction contracts to "furnish weekly a statement with respect to the wages paid each employee during the preceding week." U.S. Department of Labor (DOL) Regulations at 29 C.F.R. § 5.5 (a)(3)(ii) require contractors to submit weekly a copy of all payrolls to the Federal agency contracting for or financing the construction project, accompanied by a signed "statement of Compliance" indicating that the payrolls are correct and complete and that each laborer or mechanic has been paid not less than the proper Davis-Bacon prevailing wage rate for the work performed. DOL and federal contracting agencies receiving this information review the information to determine that employees have received legally required wages and fringe benefits.

Under the Davis-Bacon and related Acts, the contractor is required to pay not less than prevailing wage, including fringe benefits, as predetermined by the Department of Labor. The contractor's obligation to pay fringe benefits may be met either by payment of the fringe benefits to bona fide benefit plans, funds or programs, or by making payments to the covered workers (laborers and mechanics) as cash in lieu of fringe benefits.

This payroll provides for the contractor to show on the face of the payroll all the monies to each worker, whether as basic rates or as cash in lieu of fringe benefits, and provides for the contractor's representation in the statement of compliance on the payroll (as shown on page two of payroll) that he/she is paying for fringe benefits required by the contract and not paid as cash in lieu of fringe benefits. Detailed instructions concerning the preparation of the payroll follow:

Contractor or Subcontractor: Fill in your firm's name and check appropriate box.

Address: Fill in your firm's address.

Payroll No.: Beginning with the number "1", list the payroll number for the submission

For Week Ending: List the workweek ending date.

Project and Location: Self-explanatory

Project or Contract No.: Self-explanatory

Column 1 – Name and Individual Identifying Number of Worker: Enter each worker's full name and an individual identifying number (e.g., last four digits of worker's social security number) on each weekly payroll submitted.

Column 2 – No. of Withholding Exemptions: This column is merely inserted for the employer's convenience and is not a requirement of Regulations, Part 3 and 5.

Column 3 - Work Classifications: List classification descriptive of work actually performed by each laborer or mechanic. Consult classification and minimum wage schedule set forth in contract specifications. If additional classifications are deemed necessary, see Contracting Officer of Agency representative. An individual may be shown as having worked in more than one classification provided an accurate breakdown or hours worked in each classification is maintained and shown on the submitted payroll by use of separate entries.

Column 4 - Hours Worked: List the day and date and second straight time and overtime hours worked in the applicable boxes. On all contracts subject to the Contract Work Hours Standard Act, enter hours worked in excess of 40 hours a week as "overtime."

Column 5 - Total: Self-explanatory.

Column 6 - Rate of Pay: In the "straight time" box for each worker, list the actual hourly rate paid for straight time worked, plus cash paid in lieu of fringe benefits paid. When recording the straight time hourly rate, any cash paid in lieu of fringe benefits may be shown separately from the basic rate. For example, "12.50/.40" would reflect a $12.25 base hourly rate plus $0.40 for fringe benefits. This is of assistance in correctly computing overtime. See "Fringe Benefits" below. When overtime is worked, show the overtime hourly rate paid plus any cash in lieu of fringe benefits paid in the "overtime" box for each worker; otherwise, you may skip this box. See "Fringe Benefits" below. Payment of not less than time and one-half the basic or regular rate paid is required for overtime under the Contract Work Hours Standard Act of 1962 if the prime contract exceeds $100,000. In addition to paying no less than the predetermined rate for het classification which an individual works, the contractor must pay amounts predetermined as fringe benefits in the wage decision made part of the contract to approved fringe benefit plans, funds or programs or shall pay as cash in lieu of fringe benefits. See "FRINGE BENEFITS" below.

Column 7 – Gross Amount Earned: Enter gross amount earned on this project. If part of a worker's weekly wage was earned on projects other than the project described on this payroll, inter in column 7 first enter amount earned on the Federal or Federally assisted project and then the gross amount earned during the week on all projects, thus "$163.00/$420.00" would reflect eh earnings of a worker who earned $163.00 on a Federally assisted construction project during a week in which $420.00 was earned on all work.

Column 8 - Deductions: Five columns are provided for showing deductions made. If more than five deductions are involved, use the first four columns and show the balance deductions under the fifth "Other" column; show actual total under "Total Deductions" column; and in the attachment to the payroll describe the deduction(s) contained in the "Other" column. All deductions must be in accordance with the provisions of the Copeland Act Regulations, 29 C.F.R., Part 3. If an individual worked on other jobs in addition to this project, show actual deductions from his/her weekly gross wage, and indicate that deductions are based on his gross wages.

Column 9 - Net Wages Paid for Week: Self-explanatory.

Totals – Space has been left at the bottom of the columns so that totals may be shown if the contractor so desires.

Statement Required by Regulations, Parts 3 and 5: While the "statement of compliance" need not be notarized, the statement (on page 2 of the payroll form) is subject to the penalties provided by 18 U.S.C. § 1001, namely, a fine, possible imprisonment of not more than 5 years, or both. Accordingly, the party signing this statement should have knowledge of the facts represented as true.

Items 1 and 2: Space has been provided between items (1) and (2) of the statement for describing any deductions made. If all deductions made are adequately described in the "Deductions" column above, state "See Deductions

column in this payroll." See "FRINGE BENEFITS" below for instructions concerning filling out paragraph 4 of the statement.

Item 4 FRINGE BENEFITS – Contractors who pay all required fringe benefits: If paying all fringe benefits to approved plans, funds, or programs in amounts not less than were determined in the applicable wage decision of the Secretary of Labor, show the basic cash hourly rate and overtime rate paid to each worker on the face of the payroll and check paragraph 4(a) of the statement on page 2 of the WH-347 payroll form to indicate the payment. Note any exceptions in section 4(c).

Contractors who pay no fringe benefits: if not paying all fringe benefits to approved plans, funds, or programs in amounts of at least those that were determined in the applicable wage decision of the Secretary of Labor, pay any remaining fringe benefit amount to each laborer and mechanic and insert in the "straight time" of the "Rate of Pay column of the payroll an amount not less than the predetermined rate for each classification plus the amount of fringe benefits determined for each classification in the application wage decision. Inasmuch as it is not necessary to pay time and a half on cash paid in lieu of fringe benefits, the overtime rate shall not be less than the sum of the basic predetermined rate, plus the half time premium on basic or regular rate, plus the required cash in lieu of fringe benefits at the straight time rate. In addition, check paragraph 4(b) of the statement on page 2 of the payroll form to indicate the payment of fringe benefits in cash directly to the workers. Note any exceptions in section 4 (c).

Use of Section 4(c), Exceptions: Any contractor who is making payment to approved plans, funds, or programs in amounts less than the wage determination requires is obliged to pay the deficiency directly to the covered worker as cash in lieu of fringe benefits. Enter any exceptions to section 4(a) or 4(b) in section 4(c). Enter in the Exception column the craft, and enter in the Explanation column the hourly amount paid each worker as cash in lieu of fringe benefits and the hourly amount paid to plans, funds or programs as fringe benefits. The contractor must pay an amount not less than the predetermined rate plus cash in lieu of fringe benefits as shown in section 4(c) to each such individual for all hours worked (unless otherwise provided by applicable wage determination) on the Federal or Federally assisted project. Enter the rate paid and amount of cash paid in lieu of fringe benefits per hour in column 6 on the payroll. See paragraph on "Contractors who pay no fringe benefits" for computation of overtime rate.

CITY OF MOSCOW
EDA AWARD NO. 07-79-07731
SIXTH STREET BRIDGE REPLACEMENT PROJECT
MOSCOW, IDAHO

See pages 53 through 60 for the forms that need to be completed and returned to the Grants Administrator.

Payroll may be completed by hand on this paper form, or a computerized or online printable version provided all the same information is included, on a weekly basis as stated in the instructions above. The original signed version must be mailed within seven (7) days to the Grants Division, City of Moscow, PO Box 9203, Moscow, ID 83843 or emailed to grantsmanager@ci.moscow.id.us.

U.S. DEPARTMENT OF LABOR

PAYROLL

Wage and Hour Division

(For Contractor's Optional Use: See Instructions at www.dol.gov/whd/forms/wh347instr.htm)

OMB No.: 1215-0149
OMB No. 1235-0008
Expires: 04/30/2018

NAME OF CONTRACTOR ☐ OR SUBCONTRACTOR ☐		ADDRESS	
PAYROLL NO.	FOR WEEK ENDING	PROJECT AND LOCATION	PROJECT OR CONTRACT NO.

(1) NAME, AND EMPLOYEE NUMBER	NO. OF WITHHOLDING EXEMPTIONS	(3) WORK CLASSIFICATION	OT. OR ST.	(4) DAY AND DATE / HOURS WORKED EACH DAY							(5) TOTAL HOURS	(6) RATE OF PAY	(7) GROSS AMOUNT EARNED	(8) DEDUCTIONS						(9) NET WAGES PAID FOR WEEK
														FICA	WITH-HOLDING TAX			OTHER	TOTAL DEDUCTIONS	
			O																	
			S																	
			O																	
			S																	
			O																	
			S																	
			O																	
			S																	
			O																	
			S																	
			O																	
			S																	
			O																	
			S																	
			O																	
			S																	

While completion of Form WH-347 is optional, it is mandatory for covered contractors and subcontractors performing work on Federally financed or assisted construction contracts to respond to the information collection contained in 29 C.F.R. §§ 3.3, 5.5(a). The Copeland Act (40 U.S.C. § 3145) contractors and subcontractors performing work on Federally financed or assisted construction contracts to "furnish weekly a statement with respect to the wages paid each employee during the preceding week." U.S. Department of Labor (DOL) regulations at 29 C.F.R. § 5.5(a)(3)(ii) require contractors to submit weekly a copy of all payrolls to the Federal agency contracting for or financing the construction project, accompanied by a signed "Statement of Compliance" indicating that the payrolls are correct and complete and that each laborer or mechanic has been paid not less than the proper Davis-Bacon prevailing wage rate for the work performed. DOL and federal contracting agencies receiving this information review the information to determine that employees have received legally required wages and fringe benefits. **Public Burden Statement** We estimate that is will take an average of 55 minutes to complete this collection, including time for reviewing instructions, searching existing data sources, gathering and maintaining the data needed, and completing and reviewing the collection of information. If you have any comments regarding these estimates or any other aspect of this collection, including suggestions for reducing this burden, send them to the Administrator, Wage and Hour Division, U.S. Department of Labor, Room S3502, 200 Constitution Avenue, N.W. Washington, D.C. 20210

Date _____

I, _____ _____

(Name of signatory party) (Title)

do hereby state:

(1) That I pay or supervise the payment of the persons employed by

_____ on the

(Contractor or subcontractor)

_____; that during the payroll period commencing on the

(Building or work)

_____ day of _____, 20_____, and ending the _____ day of _____, 20_____, all persons employed on said project have been paid the full weekly wages earned, that no rebates have been or will be made either directly or indirectly to or on behalf of said

_____ from the full

(Contractor or subcontractor)

weekly wages earned by any person and that no deductions have been made either directly or indirectly from the full wages earned by any person, other than permissible deductions as defined in Regulations, Part 3 (29 CFR Subtitle A), issued by the Secretary of Labor under the Copeland Act, as amended (48 Stat. 948, 63 Stat. 108, 72 Stat. 967, 76 Stat. 357; 40 U.S.C. §3145), and described below:

_____

_____

_____

_____

(2) That any payrolls otherwise under this contract required to be submitted for the above period are correct and complete; that the wage rates for laborers or mechanics contained therein are not less than the applicable wage rates contained in any wage determination incorporated into the contract; that the classifications set forth therein for each laborer or mechanic conform with the work he performed.

(3) That any apprentices employed in the above period are duly registered in a bona fide apprenticeship program registered with a State apprenticeship agency recognized by the Bureau of Apprenticeship and Training, United States Department of Labor, or if no such recognized agency exists in a State, are registered with the Bureau of Apprenticeship and Training, United States Department of Labor.

(4) That:

(a) WHERE FRINGE BENEFITS ARE PAID TO APPROVED PLANS, FUNDS, OR PROGRAMS

☐ -In addition to the basic hourly wage rates paid to each laborer or mechanic listed in the above referenced payroll, payments of fringe benefits as listed in the contract have been or will be made to appropriate programs for the benefit of such employees, except as noted in Section 4(c) below.

(b) WHERE FRINGE BENEFITS ARE PAID IN CASH

☐ -Each laborer or mechanic listed in the above referenced payroll has been paid, as indicated on the payroll, an amount not less than the sum of the applicable basic hourly wage rate plus the amount of the required fringe benefits as listed in the contract, except as noted in Section 4(c) below.

(c) EXCEPTIONS

EXCEPTION (CRAFT)	EXPLANATION

REMARKS

NAME AND TITLE	SIGNATURE

THE WILFUL FALSIFICATION OF ANY OF THE ABOVE STATEMENTS MAY SUBJECT THE CONTRACTOR OR SUBCONTRACTOR TO CIVIL OR CRIMINAL PROSECUTION. SEE SECTION 1001 OF TITLE 18 AND SECTION 231 OF TITLE 31 OF THE UNITED STATES CODE.

CITY OF MOSCOW
EDA AWARD NO. 07-79-07731
SIXTH STREET BRIDGE REPLACEMENT PROJECT
MOSCOW, IDAHO

Payroll Signature Authorization Form
Certificate from Contractor/Subcontractor Appointing Officer
or Employee to Supervise Payment of Employees

(I) (We) hereby certify that (I am) (we are) (the prime contractor) (a subcontractor) for _____ *(Specify "General Construction," i.e., plumbing, electrical, etc.)* in connection with construction of the above mentioned Project, and (I) (we) have appointed, whose signature appears below, to supervise the payment of (my) (our) employees beginning *(Date: mm/dd/yyyy)* _____. That he/she is in a position to have knowledge of the facts set forth in the payroll documents and in the Statement of Compliance required by the so-called Kick-Back Statute that he is to execute with (my) (our) full authority and approval until such times as (I) (we) submit to the **Grants Division of the City of Moscow** a new certificate appointing some other person for the purposes hereinabove stated.

Printed Name of Appointee	Name of Contractor/Subcontractor
Signature of Appointee	Signature Authorizing Appointee (see NOTE below)
Title	Title
Date	Date

NOTE: This certificate must be executed by an authorized officer of a corporation or by a member of a partnership, and shall be executed prior to and submitted with the first payroll. Should the appointee be changed, a new certificate must accompany the first payroll for which the new appointee executes a statement of compliance required by the Kick-Back Statute.

Complete the above information and mail or email this original form to the following attention:

Grants Division
City of Moscow
PO Box 9203
Moscow, ID 83843
grantsmanager@ci.moscow.id.us

CITY OF MOSCOW
EDA AWARD NO. 07-79-07731
SIXTH STREET BRIDGE REPLACEMENT PROJECT
MOSCOW, IDAHO

Payroll Overview

Contractor/Subcontractor: _____

Wage Decision Nos. and Modification(s): Idaho, Heavy ID2022065, 02/25/2022
Idaho, Highway ID20220082, 02/25/2022

Name of Payroll Clerk: _____
As Listed on the Payroll Authorization Form

Contact Number for Payroll Clerk _____
(Telephone and Email)

List below the job classification, basic hourly rate, and fringe benefit rate for each job classification of employees you will utilize during the entire project. You must use the job classification from the approved wage decision listed above. If the approved wage decision does not include a job classification needed for the project, an additional job classification must be obtained. The Wage Decision list above is attached.

JOB CLASS	BASIC HOURLY RATE*	FRINGE BENEFIT RATE	OVERTIME RATE
"Power Equipment Operator – Bulldozer"			

*The basic hourly rate includes the zone rate where applicable

Check the applicable box:
1. ☐ All Fringe benefits are paid in cash for all employees.
2. ☐ All Fringe benefits are paid to a plan for all employees
3. ☐ Fringe benefits are paid part in cash and part to a plan for all employees

If Fringe benefits are paid in whole or part to a plan, attach a copy of the:
- Letter from U.S. Department of Labor declaring plan acceptable (if available) **or**;
- Plan(s) and documentation(s) of payment for all funded plans, including but not limited to the Health Insurance Plan, Retirement Plan, Liability Insurance, and Disability Insurance.

CERTIFICATION
The Wage Determination, a Davis-Bacon poster, and an Equal Opportunity poster are posted at the job site.

Complete the above information and mail or email this original form to the following attention:
Grants Division, City of Moscow, PO Box 9203, Moscow ID 83843
grantsmanager@ci.moscow.id.us.

CITY OF MOSCOW
EDA AWARD NO. 07-79-07731
SIXTH STREET BRIDGE REPLACEMENT PROJECT
MOSCOW, IDAHO

Prime Contractor's Certification
Concerning Federal Labor Standards (Davis Bacon)

The undersigned prime contractor, having executed a contract with the local government of the City of Moscow Idaho, in the amount $_____ for the construction of the above-identified project, certifies that:

3. He/she will comply with the Federal Labor Standards Provisions (e.g. Davis-Bacon Act, Copeland Act, Contract Work Hours and Safety Standards Act) and Prevailing Wage Decision(s) are included in the project's contract documents.

   All laborers and mechanics employed on the project will be paid according to the appropriate Prevailing Wage Decision # Heavy ID2022065 02/25/2022 or Highway ID20220082 02/25/2022,

4. Corrections of any infractions of the Federal Labor Standards Provisions, including infractions by any subcontractors and any lower tier subcontractors, is this contractor's responsibility.

5. Neither this contractor, any subcontractor, nor any affiliates, have been declared ineligible to participate in federally funded construction projects.

6. Contractor agrees to obtain and forward all Subcontractors' Certification concerning Federal Labor Standards Provisions and Prevailing Wage requirements to the Local Government or Local Government's representative within ten (10) days after execution of any subcontract.

Prime Contractor	Tax ID Number
Street/Mailing Address	City, State, Zip
Printed Name of Prime Contractor	DUNS Number
Prime Contractor Signature	Date

Complete the above information and mail or email this original form to the following attention:
Grants Division City of Moscow, PO Box 9203, Moscow ID 83843
grantsmanager@ci.moscow.id.us

CITY OF MOSCOW
SIXTH STREET BRIDGE
REPLACEMENT PROJECT
MOSCOW, IDAHO

Subcontractor's Certification
Concerning Federal Labor Standards (Davis Bacon)

The undersigned subcontractor, having executed a contract with _____ (Prime Contractor), in the amount $_____for _____ (Nature of Work i.e. Electrical) for the above-identified project certifies that:

1. He/she will comply with the Federal Labor Standards Provisions (e.g. Davis-Bacon Act, Copeland Act, Contract Work Hours and Safety Standards Act) and Prevailing Wage Decision(s) are included in the project's contract documents.

2. All laborers and mechanics employed on the project will be paid according to the appropriate Prevailing Wage Decision # Heavy ID2022065 02/25/2022 or Highway ID20220082 02/25/2022.

3. Corrections of any infractions of the Federal Labor Standards Provisions, including infractions by any lower tier subcontractors, is this subcontractor's responsibility.

4. Neither this subcontractor, nor any affiliates, have been declared ineligible to participate in federally funded construction projects.

5. This subcontractor agrees to forward a Subcontractor's Certification concerning Federal Labor Standards Provisions and Prevailing Wage requirements to the Local Government's representative within ten (10) days after execution of any subcontract.

_____	_____
Subcontractor	Tax ID Number
_____	_____
Street/Mailing Address	City, State, Zip
_____	_____
Printed Name of Subcontractor	DUNS Number (if available)
_____	_____
Subcontractors Signature	Date

Complete the above information and mail or email this original form to the following attention:
Grants Division, City of Moscow, PO Box 9203, Moscow ID 83843
grantsmanager@ci.moscow.id.us

CITY OF MOSCOW
EDA AWARD NO. 07-79-07731
SIXTH STREET BRIDGE REPLACEMENT PROJECT
MOSCOW, IDAHO

NO WORK PERFORMED

I hereby certify that no work was performed by the undersigned contractor/subcontractor and/or employees on the construction of the above-referenced project during the period dating from _____ 20__ through _____20__.

Contractor/Subcontractor: _____

Signed By: _____

Title: _____

Date: _____

Comments:

_____
_____
_____
_____
_____
_____
_____
_____
_____

****

Questions regarding this form can be emailed to the Grants Division at grantsmanager@ci.moscow.id.us or by phone at 208.883.7035.

Complete the above information and mail or email this original form within seven (7) days of the normal payroll weekending to the following attention:

Grants Division
City of Moscow
PO Box 9203
Moscow ID 83843
grantsmanager@ci.moscow.id.us

CITY OF MOSCOW
EDA AWARD NO. 07-79-07731
SIXTH STREET BRIDGE REPLACEMENT PROJECT
MOSCOW, IDAHO

Employee Voluntary Deduction Authorization Form

I have chosen to enroll in the payroll deduction programs made available on a voluntary basis. I hereby authorize _____my employer, to withhold from my compensation for the programs checked below for the corresponding, one time only deduction program or a continuous deduction program. The consent to participate in these programs is not a condition either for the obtaining of or for the continuation of employment.

One Time Only	Continuous	
☐	☐	Reconciliation of a wage advance – 29 CFR 3.5 § b
☐	☐	Health Insurance plan – 29 CFR 3.5 § d
☐	☐	Retirement Plan (IRA, 401K, or other pension plan) – 29 CFR 3.5 § d
☐	☐	Liability Insurance – 29 CFR 3.5 § d
☐	☐	Disability Insurance – 29 CFR 3.5 § d
☐	☐	Vacation Plan (funded program) – 29 CFR 3.5 § d
☐	☐	Loan Repayment to Credit Unions– 29 CFR 3.5 § f
☐	☐	Union Dues – 29 CFR 3.5 § i
☐	☐	Tool withholding, which is a direct benefit to me – 29 CFR 3.5 § j & k
☐	☐	Other: _____
☐	☐	Other: _____

_____ _____
Printed Name of Employee Signature of Employee

_____
Date

If apprentice is employed please attach the building.

- A copy of the signed collective bargaining agreement for Unions (if applicable) **and**;
- Letter from U.S. Department of Labor declaring plan acceptable (if available) **or**;
- Plan(s) and documentation(s) of payment for all funded plans, including but not limited to the Health Insurance Plan, Retirement Plan, Liability Insurance, and Disability Insurance.

****

Questions regarding this form can be emailed to the Grants Division at grantsmanager@ci.moscow.id.us or by phone at 208.883.7035.

Complete the above information and mail or email this original form and the attachment(s) within seven (7) days of the normal payroll weekending to the following attention:
Grants Division, City of Moscow, PO Box 9203, Moscow ID 83843
grantsmanager@ci.moscow.id.us

ADDENDUM No. 3

City of Moscow, ID, Sixth Street Crossing over Paradise Creek

March 21, 2022

Addendum No. 3 to the **Sixth Street Crossing over Paradise Creek** Bidding Documents prepared by J-U-B ENGINEERS, Inc. is hereby submitted for use in bid preparation and Submittal.

The following clarifications, corrections, or changes are hereby made as fully and completely as if the same were entirely set forth in the Bidding Documents and shall become an integral part of the contract entered into between Owner and Contractor for this project.

Bid and Contract Documents

Invitation To Bid

- Clarification: The bid date is being extended two weeks to provide time for CIP design.
- Correction: Replace existing bid date "*Tuesday, March 22, 2022*" with the following:
    - *"Tuesday, April 5, 2022"*

Agreement

- Clarification: The substantial completion date is being extended to allow for longer lead times on materials.
- Correction: Replace existing substantial completion date "*August 26, 2022"* with the following:
    - *"October 21, 2022"*

Pre-Bid Meeting

The pre-bid meeting was held at 2:00 pm on March 15, 2022, and the meeting minutes and sign-in sheet were not included in Addendum 02; they are included in this addendum.

Questions

- This is an aggressive design/approval/fabrication/delivery/construction for the precast industry in general, as such is the project construction completion schedule flexible? Could it extend 60 days minimum?
    - The substantial completion date is extended with this addendum.
- The skewed portions of the structure are severe and will require either the structure lengthen to allow for squared ends or the skew portions will require a CIP design. If the structure cannot be extended, could the bid date extend in order for a CIP design of the skewed segments to be provided to the bidders?
    - The structure cannot be lengthened, and the bid date is extended with this addendum.
- Are CIP headwalls an option in addition to the CIP skew pieces for uniformity purposes?
    - CIP headwalls are an option. Shop drawings and calculations for CIP elements will need to be submitted for review by the City and Engineer prior to construction.

NOTICE is hereby given that this Addendum must be signed and enclosed with a sealed bid for the Moscow Booster Station Replacements – Phase II, as evidence that the Bidder has familiarized himself/herself with all changes incorporated herein.

NAME OF BIDDER: _____

By:

_____ _____

Signature Date

_____ _____

Name Title

Submitted by:

J-U-B ENGINEERS, Inc.
Christopher Pettigrew, P.E.

PRE-BID MEETING MINUTES

Subject: 6th Street Bridge Crossing Over Paradise Creek

Date and Time: March 15, 2022; 2:00 pm

Location: Moscow City Hall Council Chambers, 206 E. Third Street, Moscow, ID

Attendees: See attached sign-in sheet

AGENDA

Meeting Purpose: Discuss the project scope and schedule, review the bid requirements and portions of the Bidding Documents, answer questions from Bidders related to the project, and conduct a site visit. Topics of discussion will highlight the Project, but should not be taken out of context of the entire bid package.

Project Overview

Contract Document Review

Addenda

Bidder Questions

PROJECT OVERVIEW

- **Sign-In Sheet**
- **Project Summary**
    - Sixth Street Crossing Over Paradise Creek generally consists demo and removal of existing bridge, construction of a new bridge, demo of existing utility lines, installation and tie in of new utility lines, and surface repair. All parts or work not specifically mentioned that are necessary in order to provide a complete installation shall be included in the bid and shall conform to all local, State, and Federal requirements.

- This project will be happening at the same time as the round-about project at 6th Street and Mountain View (see Supplementary Conditions SC-7.01.D)

- **Project Funding**
  - EDA – Section 5 of Contract Docs
  - Prevailing Wage – Section 6
  - City of Moscow Federally Funded Projects – Section 7
- **Bid and Contract Document Overview**
  - Bid and Contract Documents
    - Section 1
      - Bid Forms
      - Contract Forms
    - Section 2 – General Conditions
    - Section 3 – Supplementary Conditions
    - Section 4 – Revisions to the Standard Specifications (ISPWC) & Special Provisions
    - Section 5 – Economic Development Administration (EDA) Documents
    - Section 6 – Prevailing Wage (Davis Bacon) Determination
    - Section 7 – City of Moscow Federally Funded Projects Davis Bacon Labor Standards
    - Appendix A – Geotechnical Engineering Evaluation
    - Appendix B – City of Moscow Standard Construction Specifications and Standard Construction Drawings
  - Plans

CONTRACT DOCUMENTS

- **Notice of Advertisement:**
  - Bids for the project are due by 2:00 p.m. March 22, 2022, at the office of the Community Planning & Design Engineering Division at 221 E. Second Street, Moscow, ID.
  - The bids will be publicly opened that same day at 2:15 p.m in City Hall Council Chambers, on the second floor City Hall, 206 E. Third Street, Moscow, ID.
- **Section 1A - Bid Forms**
  - **Document 00040 - Bidder's Checklist:** This list is offered as an aid to the Bidder in preparing the bid. Verify all of the items listed are provided, as a minimum.
  - **Document 00200 - Instructions to Bidders:**
    - Describes conditions related to the project, bid submittal, bid security, etc.
    - Issuing Office: J-U-B ENGINEERS in Moscow, ID; phone: (208) 746-9010. Questions should be directed to Christopher Pettigrew *(cpettigrew@jub.com)*; copies of the documents are available from Quest CDN (www.questcdn.com), project # 8137188.
    - Article 11 - Substitutes and "or-equals" items
      a. Will not be considered until after effective date of agreement.
    - Article 23 – Retainage
      a. Retainage will be 5%

- **Document 00410 – Bid Form**
    - Fill out all blank spaces in the bid form.
    - Bid will remain subject to acceptance for 60 days (Article 2.01)
    - Note attachments to this bid (Article 7.01)
    - Article 14 – Basis of Bid; Comparison of Bids
        a. Base Bid
- **Document 00415 – Contractor's Non-Collusion Affidavit**
- **Document 00420 – Anti-Discrimination Affidavit**
- **Document 00430 – Bid Bond-Penal Sum Form**
- **Document 00440 – Naming of Subcontractors Form**

- **Section 1B - Contract Forms**
    - **Document 00510 - Notice of Award**
    - **Document 00520 - Agreement:**
        - City of Moscow standard agreement
        - Conditions of the Agreement, including scope of the Contract Documents.
        - Substantial Completion: 100 calendar days after Notice to Proceed
        - Final Payment: 15 calendar days after Substantial Completion

- LD's listed at $2,500 per day

- **Document 00550 - Notice to Proceed**
- **Document 00610 - Performance Bond:** Required from the successful bidder for the project.
- **Document 00615 - Payment Bond:** Required from the successful bidder for the project.
- **Form EFO00168 – Public Works Contract Report**
- **Application for Payment, Certificate of Substantial Completion, Change Order, Field Order, etc.**: Sample of forms to be used during construction.

- **Section 2 – General Conditions – ISPWC Division 100**
- **Section 3 – Supplementary Conditions**
  - Modifications to the General Conditions
  - Insurance requirements (Worker's Compensation, General Liability, Automobile Liability, Contractual Liability, etc.)
- **Section 4 – Revisions to the Standard Specifications (ISPWC) & Special Provisions**
  - Modifications to ISPWC and a few special provisions added
- **Section 5 – Economic Development Administration (EDA) Documents**
  - U.S. Department of Commerce Economic Development Administration (EDA) Contracting Provisions for Construction Projects
  - EDA Site Sign Specification

    - Notice of Affirmative Action to Ensure Equal Employment Opportunity
    - Form CD-215 Certification Regarding Lobbying Lowe Tier Covered Transactions
  - **Section 6 – Prevailing Wage (Davis Bacon) Determination**
    - City will confirm that there have not been any updates
  - **Section 7 – City of Moscow Federally Funded Projects Davis Bacon Labor Standards**
    - Certified payroll, example forms, etc.
  - **Appendix A – Geotechnical Engineering Evaluation**
    - Includes pile design
  - **Appendix B – City of Moscow Standard Construction Specifications and Standard Construction Drawings**
- **Plans**
  - **General**
  - **Survey**
  - **Civil**
    - Typical Sections
    - Water Lines
      - It is critical these are constructed prior to piles and bridge or concurrent with site prep

- 10" main first to test out process on less critical line
- 24" main down-time needs to be kept to the absolute minimum
    a. Intent is for there to be two crews during the final connection in order to limit down-time of the 24" main
- City staff will be involved with disinfection, testing, and flushing in order to comply with City Cross Connection Control policy.
    a. City
        - Fill new pipe
        - Bac-T test
        - Pressure test
    b. Contractor
        - Clean install (observation of all pieces)
        - Add chlorine product in each piece
        - Coordinate with City staff
        - Dispose of chlorinated water, dechlorinate
            - Cannot discharge to stream without environmental coordination and approval
            - Need to make clear in submittal plan for dealing with chlorinated/de-chlorinated water
        - Dunk tank final connection pieces

        - Clean install of final connections
    - Roadway
    - Drainage
    - Channel Grading
    - Detour Plan
  - **Utility**
  - **Structural**
- **Notes/Comments**
  - City will remove and salvage existing jersey barriers
  - Neighbors open to negotiations on using land for storage and laydown
    - Pickard Orthodontists wanting to expand building, so open to negotiations with Contractor for using land. This property is northeast of the bridge
    - There is a well somewhere on Pickard's property, but it is not known where it is
    - Church is okay with modifications to driveway access to lot north of church (north side of 6th Street, west of Paradise Creek)
  - Complete-by date per Section 4 – COMPLETION TIME AND LIQUIDATED DAMAGES.

- This project has built in flexibility to help coordinate portions of traffic control (road closures) and paving.
    - City indicated coordination with other projects and with water main installation are the most critical elements, so final completion can be adjusted for those purposes
- Paving usually shuts down by mid to late October
- The City indicated that it is prudent that the water main relocations have clean installs because of the lack of water volume and time for flushing the pipes.
- Andrew Kovisto (City Water Department) clarified how the water main testing process worked. Details included in the project specs.

ADDENDA

- Addendum 1 – Bidder Questions
    - Questions focused only on helical piles
    - Issued on 3/14/22

BIDDER QUESTIONS

1. *The 24" jack and bore casing is really close to the R/W line, and the sending/receiving pits will go beyond the R/W line. Is this the design intent and how will this be handled during construction?*
2. *How much water will be in Paradise Creek during construction?*

NAME	COMPANY	EMAIL
Thomas Hovoldsen	LaRiviere	Thomas@Lariviere.co

ADDENDUM No. 4

City of Moscow, ID, Sixth Street Crossing over Paradise Creek

April 4, 2022

Addendum No. 4 to the **Sixth Street Crossing over Paradise Creek** Bidding Documents prepared by J-U-B ENGINEERS, Inc. is hereby submitted for use in bid preparation and Submittal.

The following clarifications, corrections, or changes are hereby made as fully and completely as if the same were entirely set forth in the Bidding Documents and shall become an integral part of the contract entered into between Owner and Contractor for this project.

Bid and Contract Documents

Invitation To Bid

- Clarification: The bid date is being extended to provide time for CIP design.
- Correction: Replace existing bid date "*Tuesday, April 5, 2022*" with the following:
    - *"Friday, April 15, 2022"*

Plans

- Example plans for the cast-in-place portions of the structure are included with this addendum for bidding purposes. Final plans and calculations specific to the Sixth Street Bridge will be submitted by the Contractor after award and before structure construction begins.

Questions

- N/A

NOTICE is hereby given that this Addendum must be signed and enclosed with a sealed bid for the Sixth Street Crossing over Paradise Creek, as evidence that the Bidder has familiarized himself/herself with all changes incorporated herein.

NAME OF BIDDER: _____

By:

_____ _____

Signature Date

_____ _____

Name Title

Submitted by:

J-U-B ENGINEERS, Inc.
Christopher Pettigrew, P.E.

CODES AND DESIGN CRITERIA

1. LOCAL BUILDING CODE - 2018 INTERNATIONAL BUILDING CODE WITH SOUTHERN NEVADA AMENDMENTS.

2. AMERICAN CONCRETE INSITUTE (ACI): ACI 318-14: BUILDING CODE REQUIREMENTS FOR STRUCTURAL CONCRETE

3. AMERICAN WELDING SOCIETY (AWS):
   A) AWS D1.1/D1.1M: STRUCTURAL WELDING CODE- STEEL, 2015.
   B) AWS D1.8/D1.8M: STRUCTURAL WELDING CODE- SEISMIC SUPPLEMENT, 2016.

4. AMERICAN ASSOCIATION OF STATE HIGHWAY AND TRANSPORTATION OFFICIALS (AASHTO):
   A) AASHTO/AWS D1.5M/D1.5: BRIDGE WELDING CODE, 2015.
   B) AASHTO GUIDE SPECIFICATIONS FOR LRFD SEISMIC BRIDGE DESIGN 2ND EDITION, WITH 2012, 2014, AND 2015 INTERIM REVISIONS.
   C) AASHTO GUIDE SPECIFICATIONS FOR SEISMIC ISOLATION DESIGN 4TH EDITION, 2014.
   D) AASHTO LRFD BRIDGE CONSTRUCTION SPECIFICATIONS 4TH EDITION, 2017.

5. AMERICAN RAILWAY ENGINEERING AND MAINTENANCE-OF-WAY ASSOCIATION (AREMA) - MANUAL FOR RAILWAY ENGINEERING. 2019

6. CAST-IN-PLACE TUNNEL DESIGN LOADS
   A) LIVE LOAD: 1.2 EQUIVALENT FEET OF FILL
   B) DEAD LOAD: -7 FEET OF FILL
   C) LATERAL EARTH PRESSURE
      BACKFILL FRICTION ANGLE: 34°
      TOTAL UNIT WEIGHT: 125 PCF
      ACTIVE LATERAL EARTH PRESSURE: 35 PCF
      AT-REST LATERAL EARTH PRESSURE: 55 PCF
      SEISMIC LATERAL EARTH PRESSURE: 8 PCF
   D) BEARING CAPACITY: 3,500 PSF

GENERAL STRUCTURAL NOTES

1. CAST-IN-PLACE CONCRETE SHALL BE CLASS MODIFIED AA (TYPE V CEMENT), f'c = 4500 PSI.

2. REINFORCING STEEL SHALL BE ASTM A615, GRADE 60.

3. REINFORCING STEEL SHALL BE TRIMMED AS REQUIRED TO PROVIDE 2" CLEAR UNLESS OTHERWISE NOTED ON PLANS.

4. CHAMFER ALL EXPOSED EDGES OF CONCRETE ¾" INCHES UNLESS OTHERWISE NOTED.

5. BAR SUPPORTS, DESIGN, DETAILING, FABRICATION, AND PLACING OF REINFORCING BARS SHALL BE IN ACCORDANCE WITH THE LATEST REVISION OF ACI 318 (BUILDING CODE REQUIREMENTS FOR STRUCTURAL CONCRETE) AND " DETAILS AND DETAILING OF CONCRETE REINFORCEMENT" (ACI SP-66(04)).

6. PER GEOTECHNICAL REPORT RECOMMENDATIONS "A MINIMUM OF 2 FEET THICK NDOT TYPE 2 CLASS AGGREGATE BASE SHALL BE PLACED BELOW FOOTINGS AND COMPACTED TO PROVIDE A UNIFORM SUPPORT FOR THE FOOTINGS. THE SUBGRADE SHALL BE SCARIFIED TO A MINIMUM DEPTH OF 8 INCHES, MOISTURE CONDITIONED AS NECESSARY FOLLOWED BY MECHANICAL COMPACTION. THE SUBGRADE AND FILL SOILS SHALL BE COMPACTED TO A MINIMUM OF 95% OF THE MAXIMUM DENSITY OBTAINED BY NEV. T108."

7. BACKFILL SHALL NOT E PLACED UNTIL CONCRETE HAS REACHED FULL 28-DAY COMPRESSIVE STRENGTH.

8. ONSITE BACKFILL MATERIAL AS WELL AS ALL EARTHWORK SHALL BE OBSERVED AND EVALUATED BY PROJECT GEOTECHNICAL ENGINEER, REFER TO THE PROJECT GEOTECHNICAL ENGINEERING.

9. CONTRACTOR SHALL COORDINATE ALL EXISTING CONDITIONS DURING CONSTRUCTION OF PROJECT. UTILITY INFORMATION SHOWN ON THE PLANS MAY NOT BE COMPLETE OR ACCURATELY DEPICT THE LOCATION OF THE UTILITIES SHOWN. THE CONTRACTOR SHALL COORDINATE THE LOCATION OF ALL EXISTING, NEW, RELOCATED AND ABANDONED UTILITIES WITH PROJECT PLANS AND NOTIFY RESPECTIVE OWNERS BEFORE COMMENCING THE WORK OF EXCAVATION, INCLUDING ANY DRILLING OR PILLING REQUIRED FOR TEMPORARY SHORING, CONFLICTS SHALL BE BROUGHT TO THE ATTENTION OF THE ENGINEER AND RESOLVED PRIOR TO PRECEEDING WITH WORK

10. VERIFY ALL DIMENSIONS AND ELEVATIONS PRIOR TO STARTING WORK. NOTIFY THE ENGINEER OF ANY DISCREPANCIES.

11. SPECIAL INSPECTIONS:
    A) SPECIAL INSPECTIONS IS REQUIRED OF MATERIAL, INSTALLATION, FABRICATION, ERECTION OR PLACEMENT OF COMPONENTS AND CONNECTIONS REQUIRING SPECIAL EXPERTISE TO ENSURE COMPLIANCE WITH APPROVED CONSTRUCTION DOCUMENTS.
    B) SPECIAL INSPECTIONS ARE REQUIRED FOR THE FOLLOWING ITEMS:
       STEEL (2018 IBC SECTION 1705.2.2)
       CONCRETE (2018 IBC TABLE 1705.3)
       SOILS (2018 IBC TABLE 1705.6)

INDEX OF DRAWINGS

SHEET NO.	TITLE
ST1	GENERAL NOTES & PLAN
ST2	TUNNEL STRUCTURAL GEOMETRY
ST3	TYPICAL SECTIONS
ST4	STRUCTURAL DETAILS

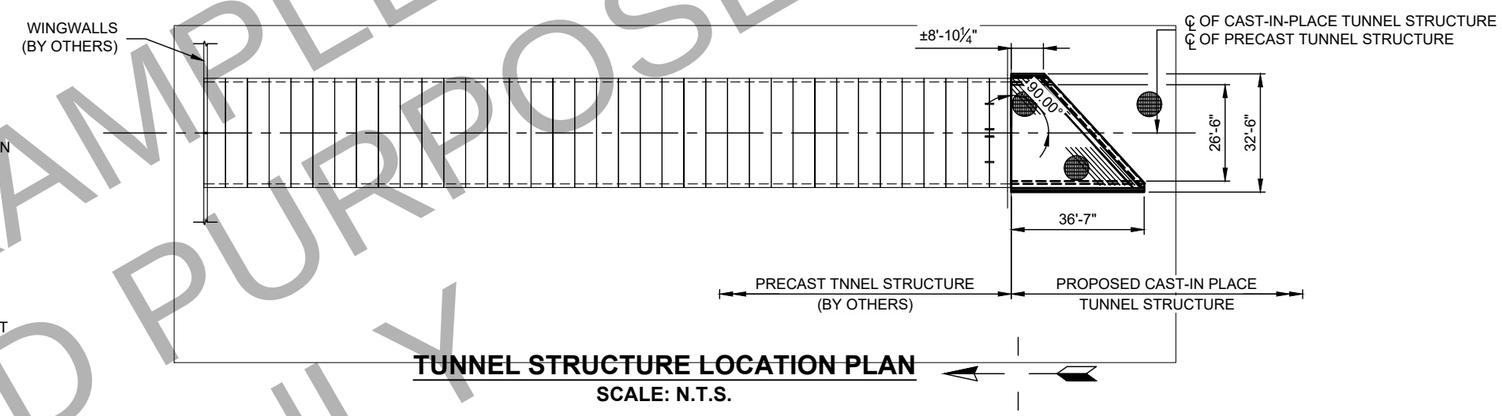

TUNNEL STRUCTURE LOCATION PLAN

SCALE: N.T.S.

EXAMPLE FOR BID PURPOSES ONLY

PROFESSIONAL ENGINEER - STATE OF NEVADA
OSCAR A. OLIDEN
CIVIL
No. 010521

P:\CONTECH SOLUTIONS\LAS VEGAS R-298 CACTUS AVE UNDERPASS-VTUSA\500 CAD\STR_TB.DWG 10/22/2020 8:02 AM

The design and information shown on this drawing is provided as a service to the project owner, engineer and contractor by CONTECH Construction Products Inc. or one of its affiliated companies ("CONTECH"). Neither this drawing, nor any part thereof, may be used, reproduced or modified in any manner without the prior written consent of CONTECH. Failure to comply is done at the user's own risk and CONTECH expressly disclaims any liability or responsibility for such use.

If discrepancies between the supplied information upon which the drawing is based and actual field conditions are encountered as site work progresses, these discrepancies must be reported to CONTECH immediately for re-evaluation of the design. CONTECH accepts no liability for designs based on missing, incomplete or inaccurate information supplied by others.

MARK	DATE	REVISION DESCRIPTION	BY

CONTECH CONSTRUCTION PRODUCTS INC.
www.contech-cpi.com
5670 Greenwood Plaza Blvd., Suite 530, Greenwood Village, CO 80111
800-526-3999 720-587-2700 720-587-2651 FAX

CONSPAN BRIDGE SYSTEMS
CONTECH CONTRACT DRAWING

XPRESSWEST - NEVADA HIGH SPEED RAIL
CACTUS AVE UNDERPASS
GENERAL NOTES & PLAN
HENDERSON, NEVADA

PROJECT No.:	SEQ. No.:	DATE:
6500773	010	08/21/2020
DESIGNED: AM	DRAWN: AM	
CHECKED: - - -	APPROVED: OAO	
SHEET NO.: ST1	OF 4	

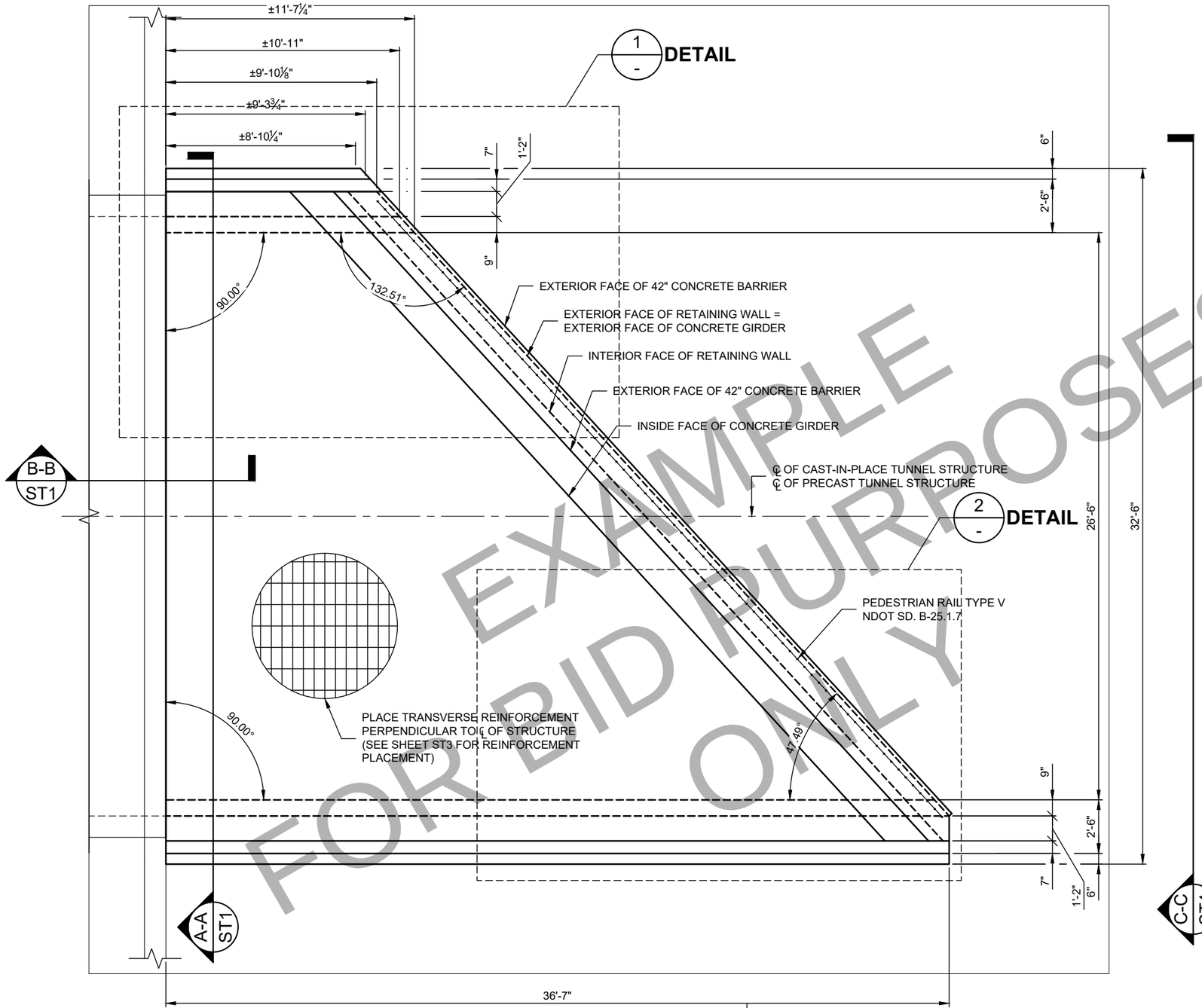

TUNNEL STRUCTURE PLAN

SCALE: 3/16" = 1'-0'

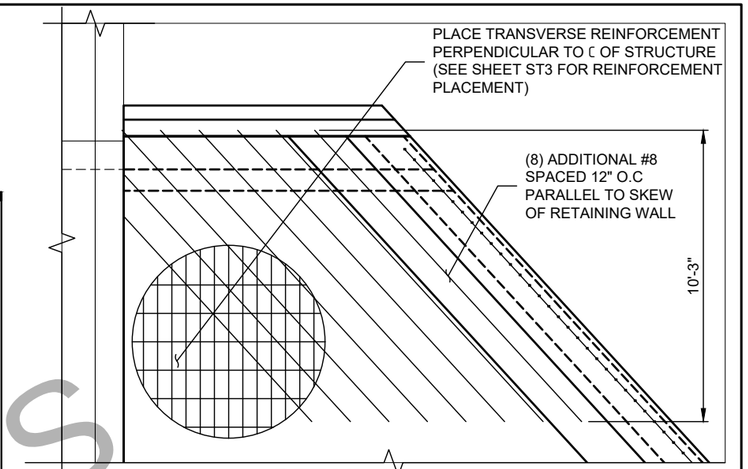

DETAIL 1

1 -

SCALE: 3/16" = 1'-0'

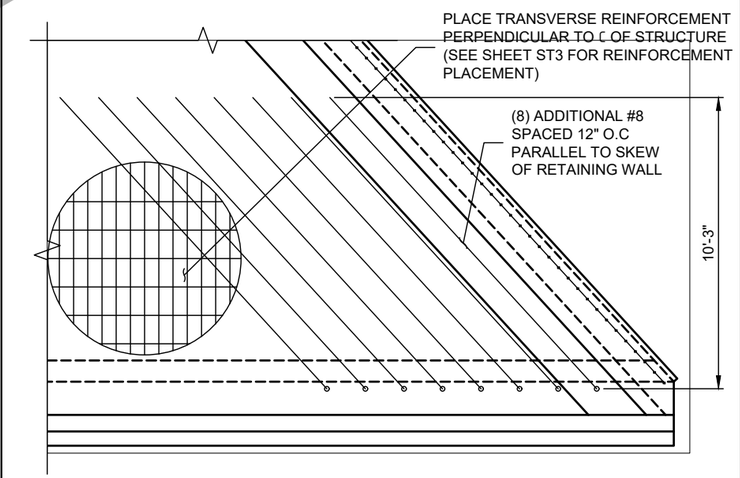

DETAIL 2

2 -

SCALE: 3/16" = 1'-0'

PROFESSIONAL ENGINEER–STATE OF NEVADA
OSCAR A. OLIDEN
CIVIL
No. 010521

PRELIMINARY
NOT FOR CONSTRUCTION

EXAMPLE FOR BID PURPOSES ONLY

The design and information shown on this drawing is provided as a service to the project owner, engineer and contractor by CONTECH Construction Products Inc. or one of its affiliated companies ("CONTECH"). Neither this drawing, nor any part thereof, may be used, reproduced or modified in any manner without the prior written consent of CONTECH. Failure to comply is done at the user's own risk and CONTECH expressly disclaims any liability or responsibility for such use.

If discrepancies between the supplied information upon which the drawing is based and actual field conditions are encountered as site work progresses, these discrepancies must be reported to CONTECH immediately for re-evaluation of the design. CONTECH accepts no liability for designs based on missing, incomplete or inaccurate information supplied by others.

MARK	DATE	REVISION DESCRIPTION	BY

CONTECH® CONSTRUCTION PRODUCTS INC.
www.contech-cpi.com
5670 Greenwood Plaza Blvd., Suite 530, Greenwood Village, CO 80111
800-526-3999 720-587-2700 720-587-2651 FAX

CON/SPAN BRIDGE SYSTEMS

CONTECH **CONTRACT** DRAWING

VICTORVILLE HIGH SPEED RAIL
CON/SPAN CROSSING
TUNNEL STRUCTURAL GEOMETRY
NEVADA

PROJECT No.:	SEQ. No.:	DATE:
6500773	010	08/21/2020
DESIGNED: AM		DRAWN: AM
CHECKED: - - -		APPROVED: OAO
SHEET NO.: ST2	OF 4	

P:\CONTECH SOLUTIONS\LAS VEGAS R-298 CACTUS AVE UNDERPASS-VTUSA\500 CAD\STR_TB.DWG 10/22/2020 8:02 AM

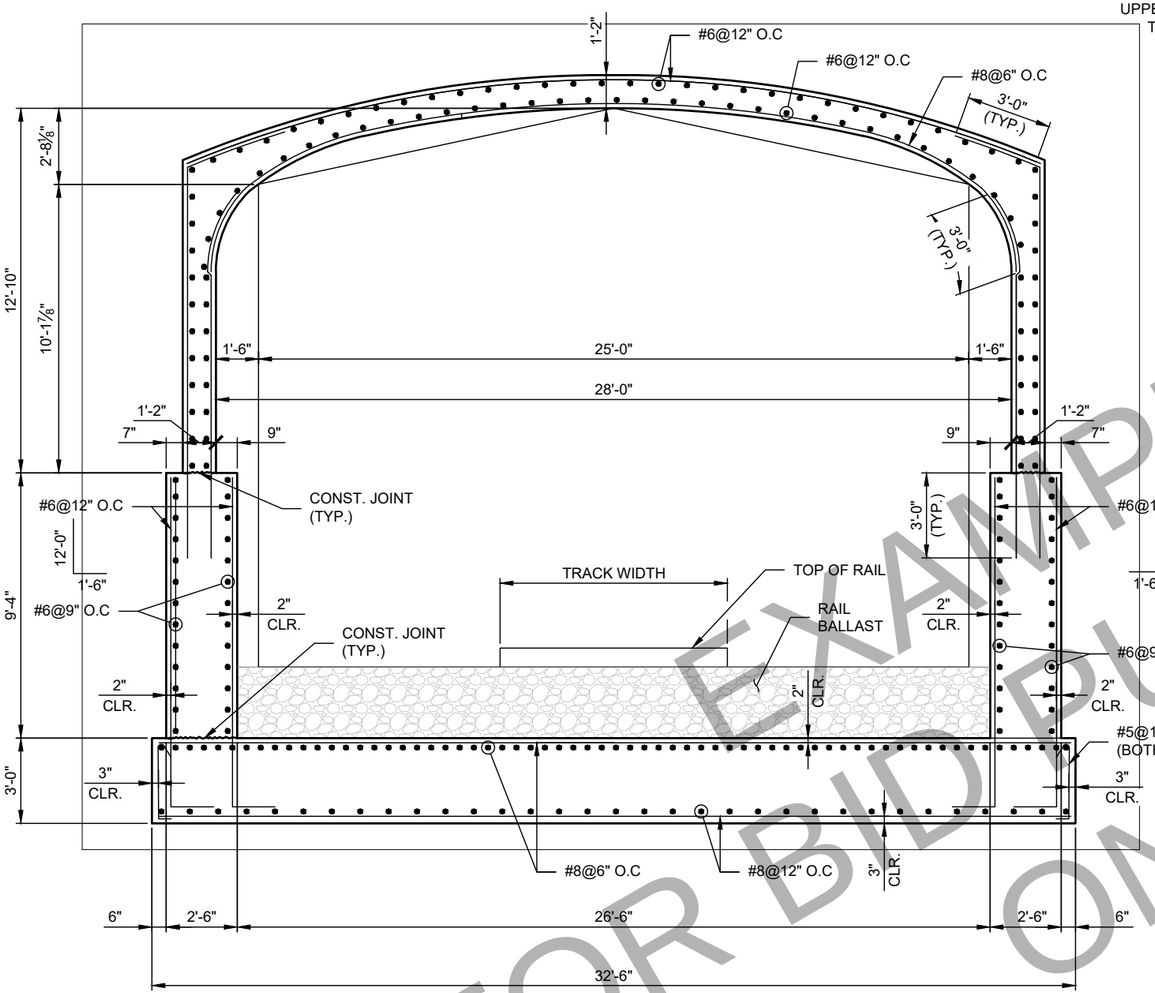

TUNNEL STRUCTURE TYPICAL SECTION A-A

A-A / ST2

SCALE: 3/16" = 1'-0'

NOTE:
INSIDE FASCIA CAST-IN-PLACE TUNNEL STRUCTURE TO MATCH PRECAST TUNNEL SECTION.

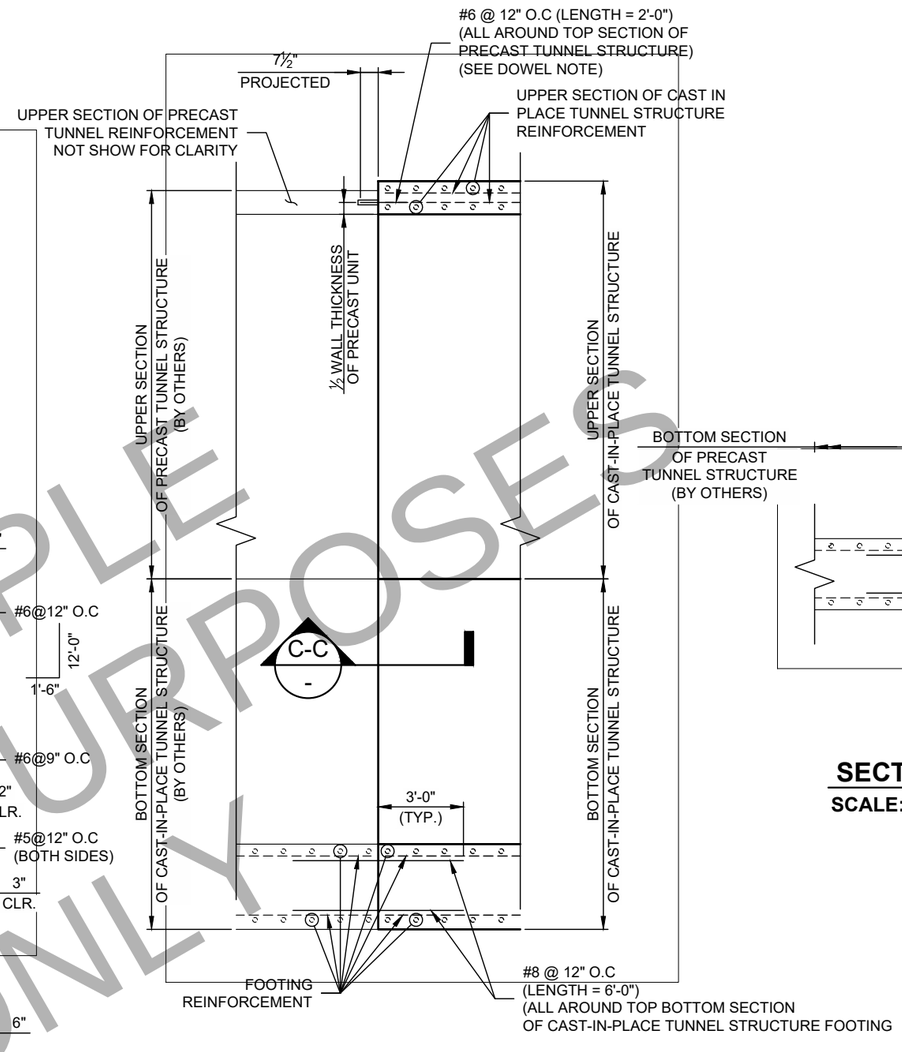

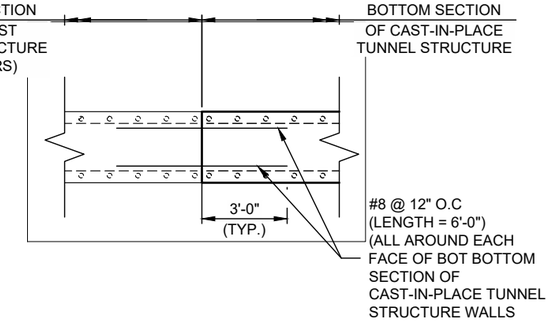

SECTION C-C

C-C / -

SCALE: 3/16" = 1'-0'

TUNNEL STRUCTURE SECTION B-B

B-B / ST2

SCALE: 3/16" = 1'-0'

DOWEL NOTE:
DOWEL HOLES SHALL BE DRILLED INTO PRECAST TUNNEL STRUCTURE. DIAMETER OF HOLE MAY BE INCLINED NO MORE THAN 5 DEGREES OFF THE HORIZONTAL. DOWELS SHALL BE EPOXIED INTO CLEAN HOLES. EPOXY SHALL BE SIMPSON-STRONG-TIE SET XP OR APPROVED EQUAL.

PROFESSIONAL ENGINEER—STATE OF NEVADA
OSCAR A. OLIDEN
CIVIL
No. 010521

PRELIMINARY
NOT FOR CONSTRUCTION

FOR BID PURPOSES ONLY

The design and information shown on this drawing is provided as a service to the project owner, engineer and contractor by CONTECH Construction Products Inc. or one of its affiliated companies ("CONTECH"). Neither this drawing, nor any part thereof, may be used, reproduced or modified in any manner without the prior written consent of CONTECH. Failure to comply is done at the user's own risk and CONTECH expressly disclaims any liability or responsibility for such use.

If discrepancies between the supplied information upon which the drawing is based and actual field conditions are encountered as site work progresses, these discrepancies must be reported to CONTECH immediately for re-evaluation of the design. CONTECH accepts no liability for designs based on missing, incomplete or inaccurate information supplied by others.

MARK	DATE	REVISION DESCRIPTION	BY

CONTECH® CONSTRUCTION PRODUCTS INC.
www.contech-cpi.com
5670 Greenwood Plaza Blvd., Suite 530, Greenwood Village, CO 80111
800-526-3999 720-587-2700 720-587-2651 FAX

CON/SPAN BRIDGE SYSTEMS

CONTECH CONTRACT DRAWING

VICTORVILLE HIGH SPEED RAIL
CON/SPAN CROSSING
TYPICAL SECTIONS
NEVADA

PROJECT No.:	SEQ. No.:	DATE:
6500773	010	08/21/2020
DESIGNED: AM		DRAWN: AM
CHECKED: - - -		APPROVED: OAO
SHEET NO.: ST3 OF 4		

P:\CONTECH SOLUTIONS\LAS VEGAS R-298 CACTUS AVE UNDERPASS-VTUSA\500 CAD\STR_TB.DWG 10/22/2020 8:02 AM

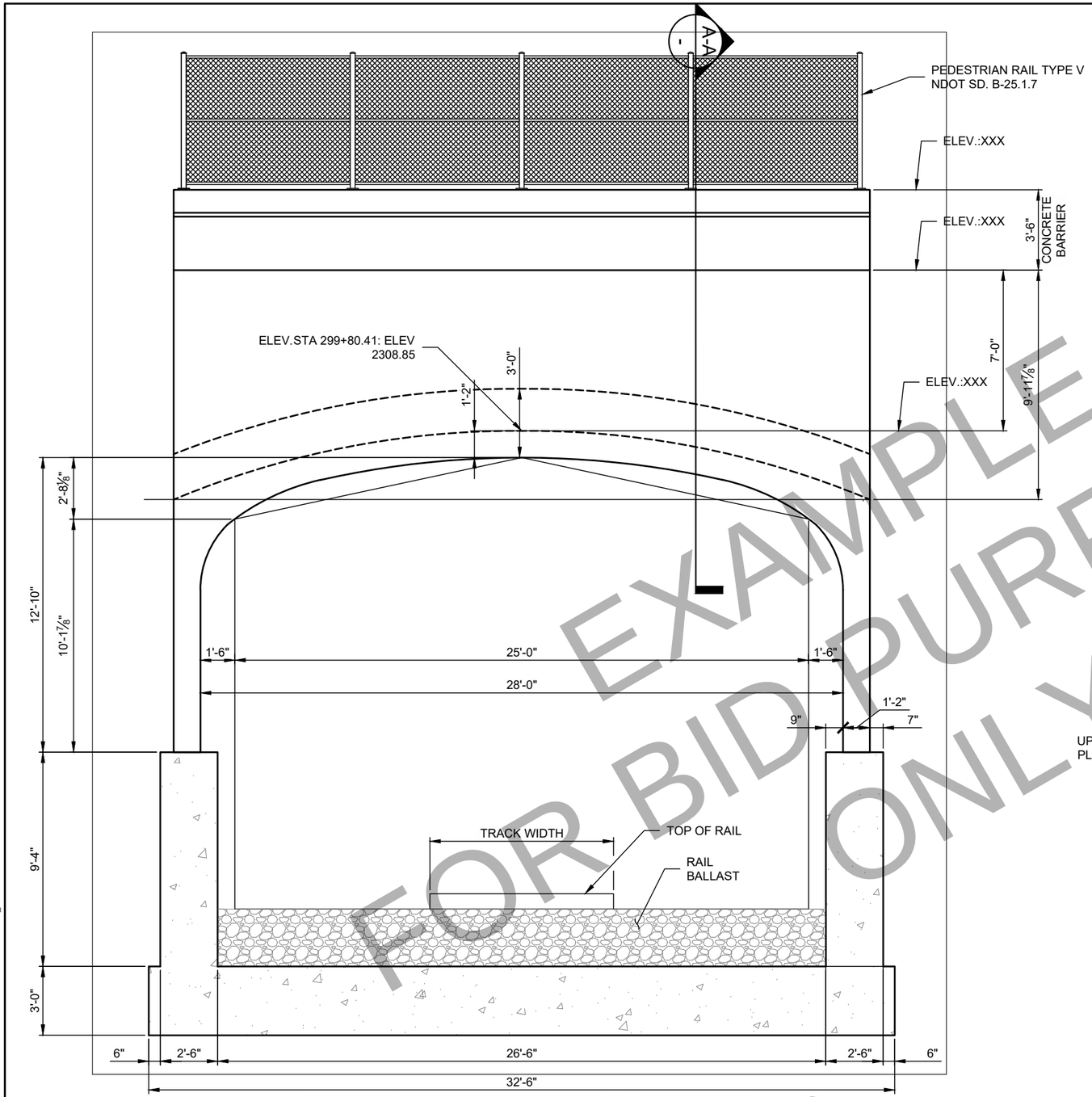

TUNNEL STRUCTURE TYPICAL SECTION C-C

C-C / ST2

SCALE: 3/16" = 1'-0'

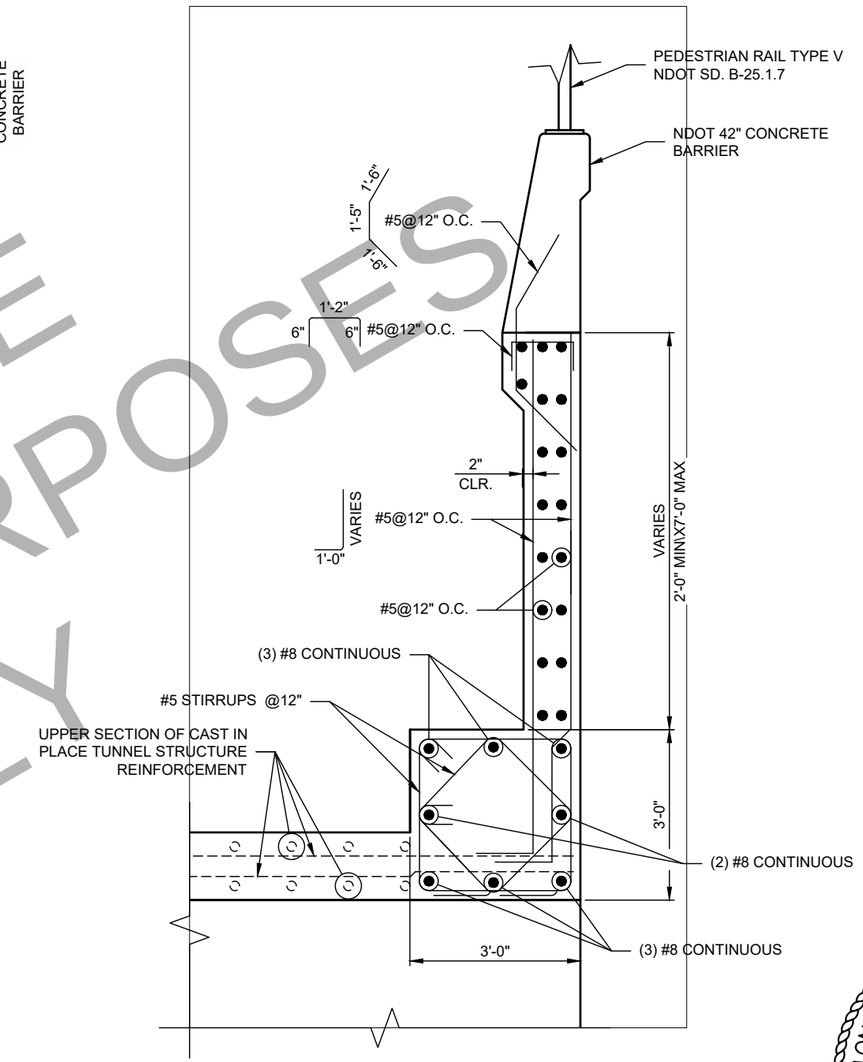

TUNNEL STRUCTURE SECTION A-A

A-A / -

SCALE: 3/8" = 1'-0'

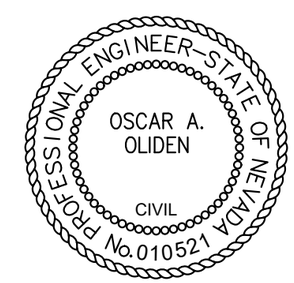

PRELIMINARY
NOT FOR CONSTRUCTION

EXAMPLE FOR BID PURPOSES ONLY

The design and information shown on this drawing is provided as a service to the project owner, engineer and contractor by CONTECH Construction Products Inc. or one of its affiliated companies ("CONTECH"). Neither this drawing, nor any part thereof, may be used, reproduced or modified in any manner without the prior written consent of CONTECH. Failure to comply is done at the user's own risk and CONTECH expressly disclaims any liability or responsibility for such use.

If discrepancies between the supplied information upon which the drawing is based and actual field conditions are encountered as site work progresses, these discrepancies must be reported to CONTECH immediately for re-evaluation of the design. CONTECH accepts no liability for designs based on missing, incomplete or inaccurate information supplied by others.

MARK	DATE	REVISION DESCRIPTION	BY

CONTECH CONSTRUCTION PRODUCTS INC.
www.contech-cpi.com
5670 Greenwood Plaza Blvd., Suite 530, Greenwood Village, CO 80111
800-526-3999 720-587-2700 720-587-2651 FAX

CONSPAN BRIDGE SYSTEMS

CONTECH **CONTRACT** DRAWING

VICTORVILLE HIGH SPEED RAIL
CON/SPAN CROSSING
STRUCTURAL DETAILS
NEVADA

PROJECT No.:	SEQ. No.:	DATE:
6500773	010	08/21/2020
DESIGNED: AM		DRAWN: AM
CHECKED: - - -		APPROVED: OAO
SHEET NO.: ST4 of 4		

P:\CONTECH SOLUTIONS\LAS VEGAS R-298 CACTUS AVE UNDERPASS-VTUSA\500 CAD\STR_TB.DWG 10/22/2020 8:02 AM

CITY COUNCIL STAFF REPORT

DATE: Monday, May 2, 2022

AGENDA ITEM TITLE

Latah County Broadband Coalition Pledge - Bill Belknap

RESPONSIBLE STAFF	REVIEWED BY
Bill Belknap, City Supervisor	This was reviewed by the Public Works/Finance Committee on April 25, 2022 and recommended for approval.

ADDITIONAL PRESENTER(S)	OTHER RESOURCES

DESCRIPTION

Latah County has recently executed an agreement for a Broadband Utility Assessment that will include regular check-ins during the data gathering and discovery phase, mapping of existing and proposed networks, and cost estimates for fiber construction, networking equipment, and data center upgrades to enable minimum speeds of 100/20 Mbps, scalable to 100 Mbps symmetrical (which are the benchmarks established by new legislation and grant programs). This Broadband Utility Assessment will be a foundational step in the process of developing a county-wide broadband plan and an indispensable asset in applying for the many, many millions of dollars in upcoming broadband funding. The County is working to form a coalition made up of stakeholders throughout the County who are pledging to participate in information sharing and gathering to identify opportunities for broadband projects in Latah County and has approached the City to participate in this process. The following is a list of current coalition members: City of Potlatch, City of Bovill, City of Genesee, City of Kendrick, City of Juliaetta, City of Deary, City of Troy, Latah County Library District, Moscow School District, Kendrick Joint School District, Genesee Joint School District, Potlatch School District, Troy School District, University of Idaho, Gritman Medical Center, Senator David Nelson. There is no financial obligation to participate in the coalition and instead, will serve to share information and coordinate efforts to expand broadband service within Latah County.

STAFF RECOMMENDATION

Approve the Mayor's signature upon the Latah County Broadband Coalition Pledge.

PROPOSED ACTIONS

ACTION: Approve the Mayor's signature upon the Latah County Broadband Coalition Pledge.

FISCAL IMPACT

PERSONNEL IMPACT

ATTACHMENTS

1. Moscow_Pledge_Latah County Broadband Coalition
2. Broad Band Description

Latah County
BOARD OF COUNTY COMMISSIONERS

P.O. Box 8068 ♦ 522 South Adams ♦ Moscow, Idaho 83843
(208) 883-7208 ♦ fax (208) 883-2280 ♦ e-mail bocc@latah.id.us
Kathie LaFortune ♦ Thomas C. Lamar ♦ David McGraw

Latah County Broadband Coalition Pledge

The goal of the Latah County Broadband Coalition is to engage stakeholders across the County in order to communicate broadband needs and offer support in developing projects to address those needs. We aim to find local, state, and federal funding to build future-proof broadband infrastructure throughout Latah County. We are not interested in prescribed pathways to achieving this goal — rather, we're committed to working together to find the best solutions for our communities. Working together will only make pursuing partnerships and funding opportunities more possible and more potent.

In establishing this coalition, we recognize the unmatched importance of broadband access and affordability for education, health, commerce, and community. Ensuring that every community member has access to reliable and affordable broadband is not only a key component to modern life but also to future development.

We undertake this work knowing that a robust broadband connection allows students greater access to educational opportunities, patients greater access to healthcare professionals, businesses access to customers around the world, and farmers the ability to increase productivity and profitability.

We are committed to providing the support our community and citizens need to enable us to build sound, future-proof broadband infrastructure and last mile connectivity to homes. To demonstrate that commitment, we sign on to join the Latah County Broadband Coalition with a pledge to participate in the following ways:

- Assign a representative to serve on the Latah County Broadband Coalition committee
- Participate in information sharing and gathering for broadband planning and projects

_____
Entity

_____ _____
Name, Title Signature

Sincerely,

Kathie LaFortune
Chair, Board of County Commissioners
Latah County

IIF Partner Project

Latah County

BROADBAND COALITION AND PLANNING

Latah County, IIF Partner Project
In October 2021, Latah County became a Project Partner with Imagine Idaho Foundation (IIF) to receive support in capacity building to build and execute a County-wide broadband plan.

BACKGROUND
Latah County is 98% rural by geography and 32% rural by population, which makes reaching the 12,660 residents who live outside the city limits of Moscow exceptionally difficult. Moscow's situated on the western-most edge of the County, close to UI/WSU, Hwy 95, and the major fiber corridor. But the rest of the County consists of 1070 square miles of expansive, topographically diverse terrain with schools, cities, and households spread out all across it. What's more: To the north, east, and south of rural Latah County is largely unpopulated timbered acreage, which provides no alternative route for connection and essentially cuts off rural Latah County from broadband services and infrastructure. About 20% of households in rural Latah County have no internet access at all and the rest have less than 10/3 mbps service, according to new NTIA maps.

COALITION + PLANNING
Latah County has recently executed an agreement for a Broadband Utility Assessment. The assessment will include regular check-ins during the data gathering and discovery phase, mapping of existing and proposed networks, and cost estimates for fiber construction, networking equipment, and data center upgrades to enable minimum speeds of 100/20 Mbps, scalable to 100 Mbps symmetrical (which are the benchmarks established by new legislation and grant programs).

This Broadband Utility Assessment will be a foundational step in the process of developing a County-wide broadband plan and an indispensable asset in applying for the many, many millions of dollars in upcoming broadband funding -- and we want all cities and citizens to be able to benefit from the results. So, as this assessment is being performed, we are also forming a coalition made up of stakeholders throughout the County who are pledging to participate in information sharing and gathering to identify opportunities for broadband projects in Latah County. We will also soon be launching a crowdsourced speed test campaign, which will give us necessary data to prove – unequivocally – that our communities are unserved.

The following is a list of current coalition members: City of Potlatch, City of Bovill, City of Genesee, City of Kendrick, City of Juliaetta, City of Deary, City of Troy, Latah County Library District, Moscow School District, Kendrick Joint School District, Genesee Joint School District, Potlatch School District, Troy School District, University of Idaho, Gritman Medical Center, Senator David Nelson.

Finally, we have a list of existing incumbent local exchange carriers (ILECs), competitive local exchange carriers (CLECs), and internet service providers (ISPs) who've agreed to participate in an advisory capacity as well as cooperate with the assessment, which is a partnership with the Port of Lewiston and paid for in part by a grant from IIF – speed test software is also made possible by IIF. Other local leaders and legislators are also aware of the project.

CITY COUNCIL STAFF REPORT

DATE: Monday, May 2, 2022

AGENDA ITEM TITLE

Artwalk Season Finale Alcohol Use Request in Entertainment District - Amanda Argona

RESPONSIBLE STAFF	REVIEWED BY
Amanda Argona, Community Events Manager	This was reviewed by the Public Works/Finance Committee on April 25, 2022 and recommended for approval.

ADDITIONAL PRESENTER(S)	OTHER RESOURCES
Jen Pfiffner, Deputy City Supervisor - Recreation, Culture and Employee Services	

DESCRIPTION

The City of Moscow Arts Department is hosting the Artwalk Season Finale on Thursday, June 16th, from 4 pm to 8 pm on Main Street between 3rd and 6th Streets. This annual event concludes the 2021-2022 Artwalk Season in an artistic and festive manner. As a City-hosted event, the Arts Department has facilitated the registration of Main Street vendors and demonstrators, as well as business and non-profit host locations. No more than 5 (five) beer/wine vendors will be authorized for beer/wine sales, and a variety of activities will take place including live music, Kidwalk, food sales, art demonstrations, and more. The event has been reviewed and approved as of April 14, 2022. Following standard operating procedures for events with alcohol that are within the Entertainment District boundaries, Artwalk is requesting a temporary suspension of the open container law by resolution. Per Moscow City Code, Section 10-1-12; a draft resolution has been prepared for Council's consideration.

STAFF RECOMMENDATION

Approve the resolution allowing for the temporary suspension of the open container law within the event footprint of the Artwalk Season Finale for the duration of the event.

PROPOSED ACTIONS

ACTION: Approve the resolution allowing for the temporary suspension of the open container law within the event footprint of the Artwalk Season Finale for the duration of the event.

FISCAL IMPACT

PERSONNEL IMPACT

ATTACHMENTS

1. Resolution 2022- Beer-Wine_The Entertainment District_Artwalk_final

RESOLUTION NO. 2022-

A RESOLUTION OF THE CITY OF MOSCOW, A MUNICIPAL CORPORATION OF THE STATE OF IDAHO, TO ALLOW FOR THE TEMPORARY VENDING OF BEER AND/OR WINE AND EXEMPTION TO THE OPEN CONTAINER PROHIBITION IN THE ENTERTAINMENT DISTRICT UNDER SPECIFIC REGULATIONS AND UNDER CERTAIN LIMITED CONDITIONS PURSUANT TO MOSCOW CITY CODE 10-1-12; PROVIDING THIS RESOLUTION TO BE EFFECTIVE UPON ITS PASSAGE AND APPROVAL.

WHEREAS, Moscow City Code 9-6-35 and 9-8-17 prohibit any person from selling, serving, giving away, dispensing, consuming or carrying any beer or wine in open containers on or in any public street, highway, alley, lane, sidewalk, public or private parking lot, conveyance, or primary and secondary school facility in the City of Moscow, Idaho (hereinafter "City") except in accordance with specific regulations adopted by the Council by Resolution; and

WHEREAS, The Entertainment District is defined in Moscow City Code 10-1-12 as an exemption to the Open Containers Prohibition (hereinafter "The Entertainment District"); and

WHEREAS, the City of Moscow (hereinafter "the Event Sponsor") desires to have its sponsored event, Artwalk (hereinafter "the Permitted Event"), in The Entertainment District (see Attachment "A"); and

WHEREAS, the Permitted Event (see Attachment "B") is an event sponsored by the Event Sponsor, intended to foster the region's cultural ecosystem by promoting the visual, literary, performance, and culinary arts offerings within Moscow businesses and non-profits; and

WHEREAS, Council wishes to allow for the vending and responsible consumption of beer and/or wine under certain conditions, contained herein and during limited hours during the Permitted Event; and

WHEREAS, Council wishes to prohibit the sale and/or consumption of liquor during the Permitted Event; and

WHEREAS, Council believes the regulations contained herein are appropriate; and

WHEREAS, Council believes that the specific regulations contained herein balance health and safety concerns of citizens with the desire to promote responsible use of alcoholic beverages; and

WHEREAS, nothing contained in this Resolution is intended to waive other laws and regulations applicable to the sale and consumption of alcohol within City limits (including a requirement for a catering permit; a beer and wine permit for benevolent, charitable and public purpose events; or a winery sponsored event permit); and

WHEREAS, nothing contained within this Resolution is intended to endorse or support any particular belief, philosophy, or political position of the Event Sponsor or of the Permitted Event, and/or its affiliates, associations, contributors, supporters, participants, etc.;

NOW, THEREFORE, BE IT RESOLVED by the Mayor and City Council of the City of Moscow, Idaho as follows:

SPECIFIC REGULATIONS ON THE SALE AND/OR CONSUMPTION OF BEER AND/OR WINE DURING ARTWALK 2022:

Intent:

This Resolution is intended to allow the sale and consumption of beer and wine only (not liquor), pursuant to these specific regulations and is not intended to amend or expand the Moscow City Code or any other applicable law or regulation beyond the scope of the particulars of this Resolution or beyond the hours of the Permitted Event. Other than as specifically provided herein, park, sanitary, health, litter, police, fire, sidewalk café, alcohol vending, and other laws and regulations shall be unaffected by this Resolution. This Resolution is not a waiver of any State, County, or local requirement of a permit or licensure related to sales and/or distribution of alcohol including a requirement for a catering permit; a beer and wine permit for benevolent, charitable and public purpose events; or a winery sponsored event permit. This Resolution shall not establish precedent nor shall it apply to any event other than the Permitted Event held on the 16 day of June, 2022, from 4 p.m. to 8 p.m.

Liability, Insurance and Safety:

1. No less than ten (10) days prior to the Permitted Event at which the licensed vendor(s) will sell beer and/or wine, the licensed vendor(s) shall provide to the Community Events Division one (1) copy of written proof that the licensed vendor(s) has current, paid up, off-premise liquor liability insurance or special event insurance in an amount not less than One Million Dollars ($1,000,000) combined single limits.
2. City shall be named as an additional insured on the insurance policy of the licensed vendor(s).
3 The Moscow Police Chief or designee is hereby empowered to order the immediate cessation of all activities allowed under this Resolution at any time he/she reasonably determines that it is in the best interest of City to do so. There shall be no appeal from a determination by the Moscow Police Chief or his designee to terminate all or part of the Permitted Event.

Vendor:

1. The number of licensed vendors selling beer and/or wine allowed at the Permitted Event, will be reviewed and approved as part of the permitting process.
2. All beer and/or wine shall be sold only by a licensed vendor.
3. Every licensed vendor shall obtain and shall comply with all alcohol related laws and regulations, including, but not limited to, the City requirement of a City catering permit; a State beer and wine permit for benevolent, charitable, or public purpose events; or a winery sponsored event permit.
4. The name, address, telephone number, alcohol license permit number of every licensed vendor, and proof of insurance covering the vendor's activities (as required herein) shall be provided to the Community Events Division no less than ten (10) days prior to the Permitted Event at which such licensed vendor shall sell beer and/or wine.
5. The vendor shall provide at least two (2) persons to check proper identification for those who shall be sold beer and/or wine during the Permitted Event. These persons shall be clearly identified.

6. The Event Sponsor shall provide at least two (2) law enforcement officers or two (2) guards from a recognized private security firm to provide security for the Permitted Event. Such officers or guards shall be clearly identified as such and shall be on duty at all times beer and/or wine is being served during the Permitted Event. The Event Sponsor shall have sole discretion on who will provide security at the Permitted Event and shall be responsible for all payment and costs associated with such security services.
7. As the Event Sponsor, the City understands and acknowledges sole responsibility for any and all liability resulting from action or inaction, and/or negligence, and/or gross negligence by security provided for the Permitted Event.

Sales and Consumption:

1. No less than ten (10) days prior to the Permitted Event at which the licensed vendor will sell beer and/or wine, the Community Events Division shall provide the City Clerk one (1) copy of a site map which shall be drawn to show the locations, dimensions of, and relative distances between the following: (a) the beer and/or wine sales and dispensing area within The Entertainment District; and (b) food sales and service areas. Said site design and any subsequent alterations shall be approved in writing by Moscow Deputy City Supervisor – Recreation, Culture, and Employee Services or his/her designee, and by the Moscow Chief of Police prior to the Permitted Event.
2. All beer and/or wine sales and dispensing shall take place within the area designated by the Event Sponsor and as shown on the site map required by this Resolution.
3. All food sales and service shall have a space of no less than ten feet (10') between the approved beer and/or wine sales and dispensing area and the food sales or service area.
4. The Event Sponsor shall provide Artwalk branded wristbands to licensed vendors for issuance to attendees denoting that such attendees' identification has been checked to confirm that they are of legal drinking age, in lieu of providing an identification checking station.
5. No person shall be allowed to purchase beer and/or wine other than within the area designated for beer and/or wine sales and dispensing as shown on the map required by this Resolution and only persons with a designated wristband shall be allowed to purchase and possess beer and/or wine.
6. All beer and/or wine shall be dispensed in and consumed from an opaque, paper, or Artwalk branded container. Such container shall be a readily identifiable container not more than sixteen ounces (16 oz.) in size which shall not bear a logo of an alcoholic beverage.
7. Every occupant within The Entertainment District shall provide identification to law enforcement officers or City employees at any point in time or location when requested to do so.
8. No person under twenty-one (21) years of age shall be allowed to wear the designated wristband at any time during the Permitted Event.
9. A sign shall be prominently posted at or near the area designated for beer and/or wine sales and dispensing stating that service to persons under twenty-one (21) years of age is prohibited.
10. Beer and/or wine shall be sold only within the designated area in The Entertainment District only between the hours of 4 p.m. and 8 p.m. local time on the 16 day of June, 2022, during the Permitted Event.
11. Beer and/or wine shall be consumed only within The Entertainment District between the hours of 4 p.m. and 8 p.m. local time on the 16 day of June, 2022, during the Permitted Event.
12. No person shall carry or consume any alcoholic beverage within The Entertainment District which is not purchased or dispensed from the licensed vendors at the Permitted Event.

Consumption of alcohol outside of The Entertainment District, in any public street, highway, alley, lane, sidewalk, public or private parking lot, conveyance, or primary and secondary school facility in the City of Moscow, shall be considered a violation of the City's open container ordinance.

Fee:

The Event Sponsor shall not be required to pay a fee for the Permitted Event that is associated with this Resolution.

Failure To Comply:

Failure to comply with this Resolution shall expose any such person to all relevant civil and criminal consequences and may result in denial of subsequent applications for alcohol permits in public parks for a period of no less than five (5) years.

PASSED on Motion by the Following Vote:

	Aye	Nay	Abstain	Absent
Hailey Lewis	_____	_____	_____	_____
Gina Taruscio	_____	_____	_____	_____
Sandra Kelly	_____	_____	_____	_____
Maureen Laflin	_____	_____	_____	_____
Anne Zabala	_____	_____	_____	_____
Julia Parker	_____	_____	_____	_____

ADOPTED by the City Council of the City of Moscow, Idaho and **APPROVED** by the Mayor of the City of Moscow, Idaho this ____ day of _____, 2022.

_____
Arthur D. Bettge, Mayor

CERTIFICATION and ATTESTATION. I hereby certify that the above is a true copy of a Resolution passed at a regular meeting of the City Council, City of Moscow, held on _____ _____, 2022 and attest to the Mayor's signature.

_____
Laurie M. Hopkins, City Clerk

DRAFT

Attachment A

Exhibit 'A' - Entertainment District Boundary

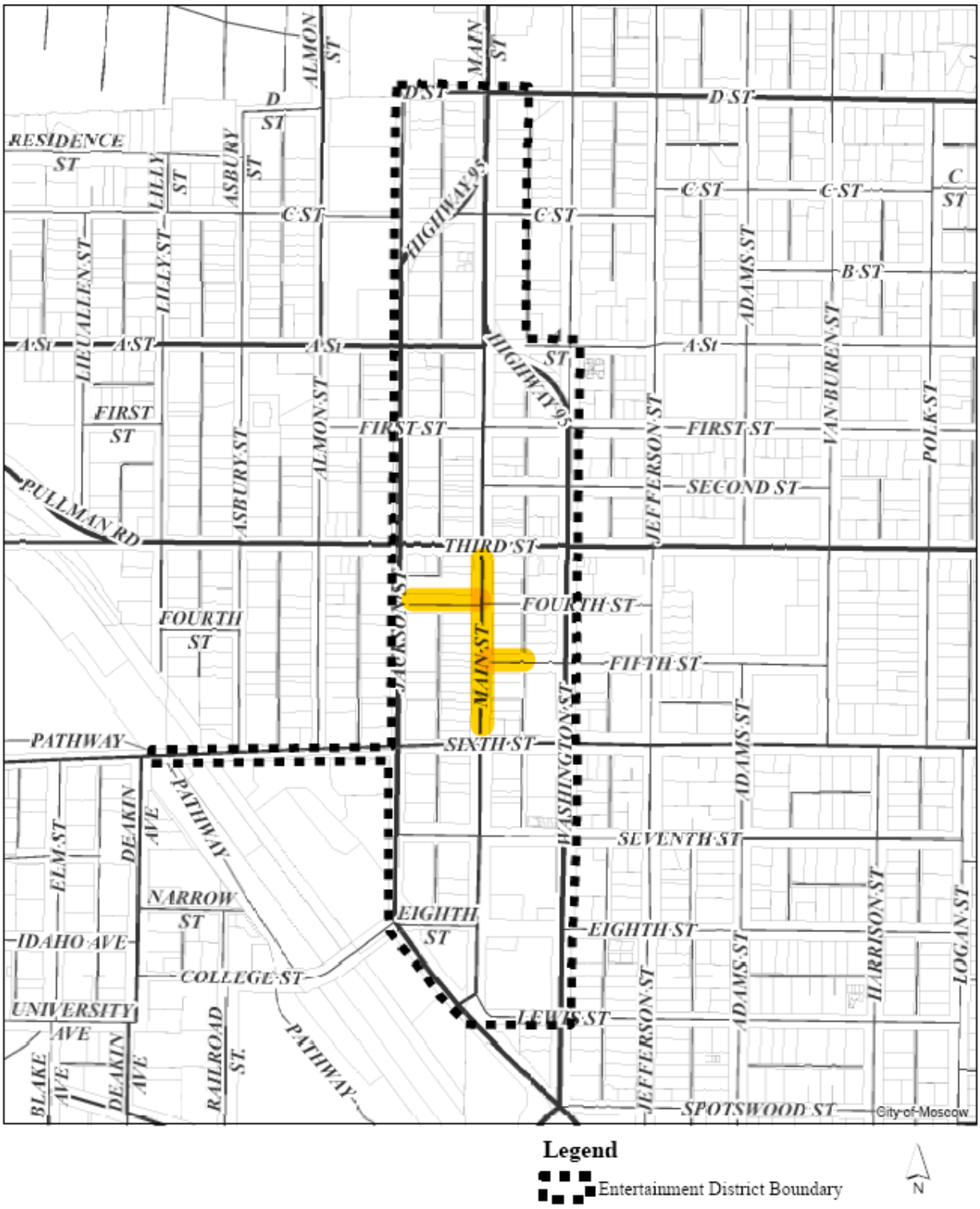

Attachment B

CITY OF MOSCOW
206 E. THIRD
MOSCOW, ID 83843
208-883-7000

PERMIT NUMBER: CE2022-07
EVENT DATE: Thursday, June 16th, 2022
EVENT TIME: 4:00 pm – 8:00 pm

THIS IS TO CERTIFY THAT

Megan Cherry
City of Moscow Arts Program
206 E. 3rd Street
Moscow, ID, 83843

IS HEREBY GRANTED A CITY OF MOSCOW COMMUNITY EVENT PERMIT FOR THE LOCATION NAMEDBELOW WITHIN THE CORPORATE LIMITS OF THE CITY OF MOSCOW, IN CONFORMITY WITH THE PROVISIONS OF CHAPTER 17, TITLE 10 OF THE MOSCOW CITY CODE.

PERMIT TYPE: Community Event

PERMIT LOCATION: 6th & Main, 5th & alley, 3rd & Main

I,_____, CERTIFY UNDER PENALTY OF PER URY PURSUANT TO THE LAWSOF THE STATE OF IDAHO, THAT THE FOREGOING IS TRUE AND CORRECT. I AGREE TO ALL THE TERMS AND CONDITIONS OF MOSCOW CITY CODE TITLE 10, CHAPTER 17 PARADE; PUBLIC ASSEMBLY AND RESOLUTION 2015-05 POLICY AND PROCEDURES FOR RIGHT-OF-WAY PERMITS. DAMAGE TO ANY PUBLIC IMPROVEMENTS ARE THE RESPONSIBILITY OF THE PERMIT HOLDER.

ISSUED THIS_____DAY OF_____, 2022

(SIGNATURE OF LICENSEE) *DATE* *(SIGNATURE OF STAFF)* *DATE*

City of Moscow Community Events Division

EVENT APPLICATION

Thank you for your interest in organizing/sponsoring an Event in the City of Moscow!
Events by local citizens add to the cultural wealth of our town and may range from fun runs to political marches, neighborhood block parties to street fairs.

Submit completed forms electronically or physically to the Community Events office: communityevents@ci.moscow.id.us or 206 E. Third Street, Suite 300, Moscow. All applications must be legible.

The City reserves the right to request additional information reasonably necessary to a fair determination as to issuance of a permit. Permits are issued on a first-come, first-served basis. According to Moscow City Code Title 10 Section 17-4, event applications for regular or recurring events must be submitted at least sixty (60) days and not more than one hundred eighty (180) days before the proposed date of the event. Event applications for single, non-recurring events must be submitted at least ten (10) days and not more than one hundred eighty (180) days before the proposed date of the event.

Events with alcohol are to be submitted at least two (2) months prior to the event date to allow for adequate review and presentation to Administrative Committee and City Council. Administrative Committee meets on the 2nd and 4th Monday of each month and City Council meets on the 1st and 3rd Monday of each month pending no holiday delays or rescheduling of meetings.

1. Name of Event: Artwalk Season Finale
2. Event Date(s): June 16, 2022
3. Event Location: Friendship Square, Main Street from 3rd to 6th, 5th Street from Main to the alley.
4. Are you requesting a street closure for Event? Yes ☒ No ☐

If yes, provide street closure location(s). List cross streets, intersections, building addresses, etc. Include these details on your site map (see item 27.)
6th & Main, 5th & alley, 3rd & Main

5. Do you require parking restrictions for the Event? Yes ☒ No ☐

If yes, list parking restrictions (i.e. no parking on day of event, parking restricted to a particular area, etc.).
No parking on the day of the event.

6. Street Closure set-up/Load-in time: 2:00 p.m. Event(s) Start time: 4:00 p.m.
7. Event(s) End time: 8:00 p.m. Street Closure take-down/Load-out time: 8:00 - 9:30 p.m.
8. Is this a recurring Event (i.e. every 1st Thurs. or every Sat. May thru Oct.)? Yes ☐ No ☒
9. Is this an annual Event? Yes ☒ No ☐
10. Are you planning on having refreshments and/or food? Yes ☒ No ☐

If yes, describe your waste and recycling plan. Applicants are responsible for removing all waste from their event footprint and disposing of properly, including emptying permanent trash receptacles in the downtown area. Dumpsters located downtown are for private use.

We are requesting Parks & Rec staff support for trash receptacles in the event footprint.

11. Are you planning on serving alcohol/having alcohol available for purchase at the Event?

Yes ■ **(continue to Q.12)** No ☐ **(skip to Q.14)**

All events with alcohol are required to have a Catering Permit.
This process is to be handled by your licensed alcohol Vendor.

Catering Permit applications are to be submitted to the City Clerk/Deputy City Clerk for approval.

12. Is the Event taking place in the public right-of-way (i.e. sidewalks, streets, etc.) within the City of Moscow Entertainment District? The Entertainment District allows for a temporary suspension of the Open Container law by Resolution of the City Council. See page 6 for a map of the Entertainment District.

Yes ■ **(continue to Q.13)** No ☐ **(skip to item B.)**

13. Are the Event organizers interested in pursuing a temporary suspension of the Open Container law by City Council Resolution?

Yes ■ **(see item A.)** No ☐ **(skip to item B.)**

A. Event organizers pursuing a temporary suspension by City Council Resolution of the Open Container law for their Event within the public right-of-way of the Entertainment District boundaries must satisfy the following conditions with their Event listed below, in addition to any requirements detailed in the Moscow City Code, as set forth by City Council Resolution, and/or Catering Permit:

☐ Include an identification checking station and its general location on Event Site Map. Identification checking station shall include a minimum of two (2) persons to check proper identification. These persons shall be clearly identified and be responsible for the issuance of wristbands denoting attendees are of legal drinking age.

☐ Submit the Alcohol Use Application and $100 non-refundable fee upon approval of Event.

☐ Be present at City of Moscow Administrative Committee and City Council meetings regarding authorization of alcohol at Event by Resolution.

☐ Post signage and waste receptacles at Event entry and exit points. Signage to clearly state "No Alcohol Permitted Beyond this Area". Additional requirements may be mandated by City Council Resolution.

B. Event organizers requesting for alcohol use for their Event that takes place in the public right-of-way NOT within the Entertainment District boundaries must satisfy the following conditions with their Event, in addition to following any requirements set forth by Resolution and/or Catering Permit. This option is also available to Event organizers who are NOT pursuing a temporary suspension by City Council Resolution of the Open Container law:

- ☐ Include the location and estimated size of the beer garden on Event Site Map. Please note: barricades required for beer gardens are 8' in length.
- ☐ Complete and submit a Barrier Use Contract with this application.
- ☐ Submit the Alcohol Use Application and $100 non-refundable fee upon approval of Event.
- ☐ Be present at City of Moscow Administrative Committee and City Council meetings regarding authorization of alcohol at Event by Resolution.

Upon approval from Council, remaining Event fees will be due, and applicant's vendor(s) are required to submit a Catering Permit application to the City Clerk/Deputy City Clerk. Any additional required paperwork outlined by the City Council Resolution and/or this process will also be due upon approval.

14. Are you planning on having a band or music? Yes ☑ No ☐

If yes, describe below any recording equipment, sound amplification equipment, etc. Submit a completed **Noise Exemption Permit Request** with this Event application.

There will be amplified music in up to two locations within the event footprint.

15. Approximate number of persons, animals, and/or vehicles comprising the Event, the type(s) of animals and description of vehicles, and approximate number of participants and spectators in viewing attendance:

Estimated Vendors: 25 (with tents and/or trucks)

Estimated Audience Members: 3000-5000

16. Do you plan on having banners, signs, or other attention-getting devices in the Event? Yes ■ No ☐

17. Do you plan on using any designated public facilities or infrastructure for the Event? Yes ■ No ☐

If yes, list public facilities or infrastructure (i.e. public restrooms, picnic shelters, stages, etc.).

Public restrooms, picnic tables, City-owned event equipment

18. Are you requesting additional City Police services for escort services, traffic, and/or crowd control?
Yes ☐ No ☐

If yes, contact City of Moscow Police Department at 208-883-7059 to discuss and see attached Fee Schedule.

19. Please use this area to include more detail or attach additional pages for additional information about Event that is pertinent for us to know.

Officers needed per Entertainment District resolution, pending Council approval.

20. Organization Sponsoring Event: City of Moscow Arts Department
21. Organization Address: 206 E Third Street
22. Organization Officers/Authorized Representatives: Megan Cherry
23. Individual Responsible for Event Organization: Megan Cherry
24. Individual's Address: 206 E Third Street, Moscow ID 83843
25. Individual's Day, Message, or Cell Phone Number: 208-883-7036
26. Individual's E-mail: mcherry@ci.moscow.id.us
27. City reserves the right to alter your route if the City determines the proposed route will require significant City services and/or severely limit transit opportunities in high traffic areas. Applicant understands and agrees that the City is reserving that right? If answers no, application may be denied. Yes ☐ No ☐
28. **Submit a Site Map with this application.** Event Applications without a Site Map will not be processed. Details on a Site Map may include but are not limited to locations of desired street closures, walking routes, assembly points, start and finish points, locations of food and beverage vendors, stages, service areas, etc. A blank map of downtown Moscow is available on page 7.
29. **Residential Neighborhood Block Parties:** Provide Proof of Insurance (Requirement may be waived at Discretion of City)
30. **All other Event Types (except Public Assembly):** Provide Proof of Insurance (Required – Certificate of Insurance must include the City of Moscow as an Additional Insured and list $500,000 as the minimum amount of general liability or $1,000,000 if alcohol is included.)

City of Moscow Community Events Division
EVENT APPLICATION

HOLD HARMLESS AGREEMENT:

The applicant/group/organization (hereinafter "SPONSOR"), through its duly and specifically authorized agents, hereby releases City of Moscow, Idaho (hereinafter "CITY") and agrees, contracts and covenants not to bring suit and agrees to defend, hold harmless, and indemnify CITY, its officers, employees, agents and representatives from any and all claims, costs, judgments, awards, or liability to any person, including claims by SPONSOR's own agents, officers, employees and representatives, to which SPONSOR might otherwise be immune, arising from the Community Event, Block Party, Public Assembly, Parade or Sidewalk Walking Parade scheduled to occur as indicated on this application (hereinafter "Event"), including any Street Closure permitted under the terms of CITY's Policy on Street Closure. No SPONSOR shall be required to indemnify or hold harmless CITY for claims, actions and demands that arise out of CITY's sole negligence. Inspection, review and/or acceptance by CITY of any activity performed by or during the Event, or any activity or non-activity by CITY Police officers or other officers, employees, agents or representatives of CITY, shall not be grounds for avoidance of any of the covenants of defense, indemnification or hold harmless by SPONSOR on behalf of CITY.

SPONSOR acknowledges that he/she has read and understands the current Idaho Governor's Idaho Rebounds Plan which includes any existing Stay Healthy Order and/or Guidelines and has read the protocols for social/physical distancing, use of face masks/face coverings, and sanitation requirements and guidelines. SPONSOR agrees to comply with the Governor's Order and/or Guidelines and ensure that all participants will comply with the Order and/or Guidelines. SPONSOR acknowledges any and all City of Moscow Public Health Directives and/or Regulations in effect at the time of the Event. SPONSOR agrees to comply with any and all City of Moscow Public Health Directives and/or Regulations in effect at the time of the Event and ensure that all participants comply with the City of Moscow Public Health Directives and/or Regulations in effect at the time of the Event. SPONSOR agrees that if CITY determines she/he and/or any participant is not in compliance with the Governor's Orders and Guidelines and/or is not in compliance with City of Moscow Public Health Directives and/or Regulations in effect at the time of the Event, CITY reserves the right to revoke the Event permit.

I, SPONSOR, certify under penalty of perjury pursuant to the law of the State of Idaho, that the foregoing is true and correct and that I have the authority to bind the group or organization, if applicable, to this Agreement.

NAME: Megan Cherry **DATE:** 3/25/22

EVENT SPONSOR ELECTRONIC SIGNATURE:

☑ By checking this box as an electronic signature, **I agree to all the terms and conditions** that apply to the Community Event /Residential Neighborhood Block Party/Public Assembly/Street Parade/Sidewalk/Pathway Event, Permitting Process, and Hold Harmless Agreement. **I certify under penalty of perjury pursuant to the law of the State of Idaho that everything in the application is true and correct and that I have authority to bind the group or organization, if applicable, to this Agreement.**

EVENT SPONSOR NON-ELECTRONIC SIGNATURE: _____
(Required only if printing and submitting in person)

The information on this form is Public Record and may be posted to a public website.
Moscow City Code Title 10, Chapter 17 is available from the City Clerk at PO Box 9203, Moscow, ID, 83843, or on the City's web page at https://www.ci.moscow.id.us/393/City-Code.

FOR OFFICE USE ONLY

☐ Community Event without alcohol	■ Community Event with alcohol	☐ Street Parade Event
☐ Sidewalk/Pathway Event (fun runs, trail runs, walk-a-thons)	☐ Public Assembly – no fee (march, picket, rally, demonstration, etc.)	☐ Residential Neighborhood Block Party Event

Date App Rec'd: 3/25/2022	Fees Due: $274	Fees Paid: Waived per City Supervisor

Entertainment District

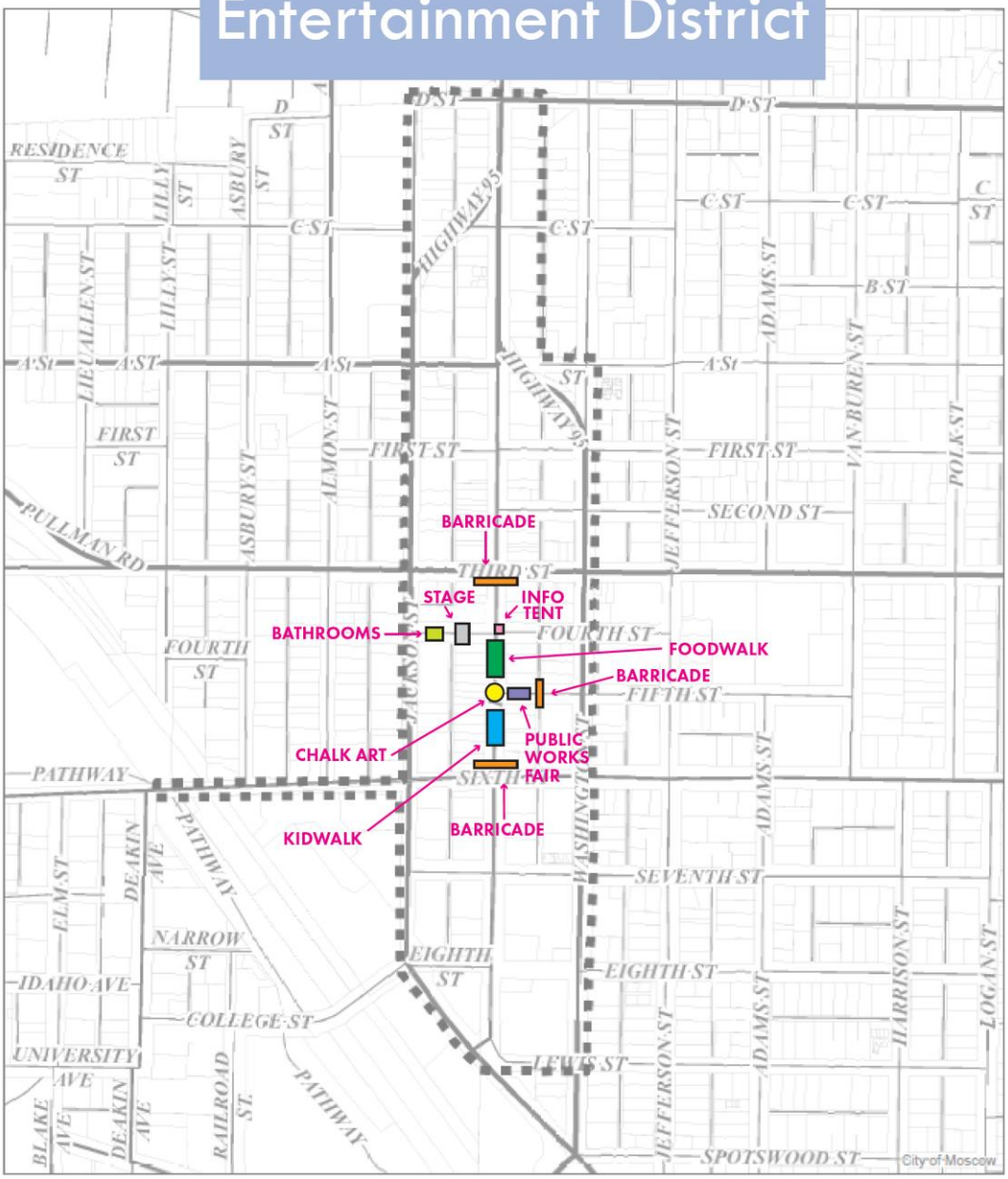

Legend

- BARRICADE
- KIDWALK
- FOODWALK
- CHALK ART
- PUBLIC WORKS FAIR
- BATHROOMS
- INFO TENT
- STAGE

Entertainment District Boundary

N

NOISE EXEMPTION PERMIT REQUEST
(Moscow City Code 10-11-2)

Requested Event Date(s): June 16, 2022 Begin time: 4:00 p.m. End time: 8:00 p.m.

Event Location: Friendship Square, Main Street from 3rd to 6th, 5th Street from Main to the alley.

Amplified Music (DJ, party, etc.) ☐ No ■ Yes

Alcoholic Beverages Available ☐ No ■ Yes - Purchaser: See Entertainment District Resolution
(Marking this box does not mean your request will be denied) (If hosted or catered, name of serving organization)

Live Band Performing ☐ No ■ Yes - Group: The Intentions, TBD

Describe the event: The Artwalk Season Finale includes music at a main stage at Friendship Square, and other performances by DJs and live bands at Kidwalk, a section of the event designed for children and families between 5th & 6th on Main Street.

(use back of this form if more space is needed)

Name of requesting person/Group/Organization: City of Moscow Arts Department

Person responsible for Group or Organization: Megan Cherry

Requesting Person's Address: 206 E Third Street

Home phone: _____ Work phone: 208-883-7036 Cell phone: _____ Pager: _____
Daytime phone number is required

Responsible person available **AT AND DURING** this event: Megan Cherry

Cell- or contact-phone during event. 208-883-7036

Your signature is unconditional acceptance of all terms and conditions. This permit may be modified or revoked by City at any time if permit conditions are violated. Read the following carefully:

The applicant/group/organization hereby agrees to indemnify and hold harmless City of Moscow, Idaho from all claims, actions and demands of any kind whatsoever related to and/or arising out of the activity(ies) specified in this application and does hereby accept all risk and responsibility for any damage(s) stemming from such activity. Every Applicant requesting a noise Exemption Permit shall cooperate with law enforcement by adjusting the noise level in the event of any citizen complaint(s). In the event of non-compliance, law enforcement may revoke this permit. No applicant/group/organization shall be required to indemnify or hold harmless City of Moscow, Idaho for claims, actions and demands that arise out of City's sole negligence.

Date: 2/24/2022 Requesting Person's Signature: Megan Cherry

◉ APPROVED ○ DENIED

Conditions:

Date permit valid: 06/16/22 Hours permit valid: 4pm-8pm

Noise level (dBa) shall not exceed 85 Dba at ◉ source at ○ property line

Other Conditions: _____

James Fry jr.
James Fry jr. (Mar 31, 2022 12:46 PDT)

Chief of Police (208) 883-7054

Community Events Division Event Application Review

Artwalk Season Finale — Saturday, June 16th. 4:00 - 8:00 pm

Event Name — **Date(s)/Time(s)**

Department/Division Designee	**Event(s) Approved/Denied**	**Date Reviewed**
James Fry Jr. (Mar 28, 2022 12:22 PDT) Moscow Police Department	◉ Approve ○ Deny	MM/DD/YYYY
Officer presence required? ◉ Yes ○ No ○ N/A	***Officers available?*** ◉ Yes ○ No ○ N/A	
Dan Ellwood Moscow Volunteer Fire Department	◉ Approve ○ Deny	MM/DD/YYYY
David R. Schott (Mar 28, 2022 13:05 PDT) Parks and Recreation Department	◉ Approve ○ Deny	MM/DD/YYYY
Kyle Rainer (Apr 5, 2022 13:41 PDT) Community Development-Engineering Division	◉ Approve ○ Deny	MM/DD/YYYY
Public Works-Environmental Services Division	◉ Approve ○ Deny	MM/DD/YYYY
Steven Schulte (Mar 28, 2022 14:19 PDT) Public Works-Streets Department	◉ Approve ○ Deny	MM/DD/YYYY
Street closure required? ◉ Yes ○ No ○ N/A	***ITD permit required?*** ○ Yes* ◉ No ○ N/A	

**Application will remain pending until ITD grants applicant a permit*

Time of street closure? 2:00 PM — Start; 9:30 PM — End

Lauren O'Laughlin (Mar 28, 2022 11:27 PDT)

City Clerk/Deputy City Clerk — Date

City of Moscow Community Events Division

ALCOHOL USE APPLICATION

This application is required for Events requesting Alcohol Use within the Moscow Downtown Central Business Zoning District. Applicants are to submit their completed Event Application to the Community Events Division first. Upon approval of Event, Applicants may then submit this form along with the non-refundable fee to begin the review process by City Council for their Alcohol Use request. City Council has the ability to deny Alcohol Use requests, but applicants may still move forward with their approved Event without alcohol.

Ideal timeline for Events requesting Alcohol Use:

1. At least two months prior to event, Applicant submits Event Application for review.
2. Upon approval of Event, Applicant submits Alcohol Use Application and pays $100 non-refundable fee.
3. Staff drafts a Resolution for the beer/wine garden request OR a Resolution for the temporary suspension of open container law. Applicants must provide their licensed alcohol providers to staff to include in the draft Resolution.
4. Applicant must be present at Administrative Committee meeting (meetings are held on the 2nd and 4th Mondays of each month pending no holiday delays).
5. Applicant must be present at City Council meeting (meetings are held on the 1st and 3rd of each month pending no holiday delays).
6. Upon approval, Applicant pays any remaining fees and is issued permit for Event.

Name of Event: Artwalk Season Finale

Event Date(s): June 16, 2022

Event Location: Friendship Square, Main Street from 3rd to 6th, 5th Street from Main to the alley.

Event Start time: 4:00 p.m. Event End time: 8:00 p.m.

Responsible Individual listed on Event Application: Megan Cherry

By signing this Alcohol Use Application, Applicant understands that their Event may not have alcohol unless approved by City Council and that City Council has the right to deny Alcohol Use Requests for Events. Applicant also understands that the Alcohol Use Fee of $100 is non-refundable regardless of the decision issued by City Council.

Megan Cherry Digitally signed by Megan Cherry Date: 2022.02.24 14:17:59 -08'00'

Signature of Responsible Individual for Event Organization ***Date***

Date Received: 3/25/2022 Date non-refundable fee paid: n/a

CITY COUNCIL STAFF REPORT

DATE: Monday, May 2, 2022

AGENDA ITEM TITLE

Downtown Streetscape Professional Services Agreement (ACTION ITEM) - Cody Riddle

RESPONSIBLE STAFF	REVIEWED BY
Cody Riddle, Deputy City Supervisor - Community Development	Bill Belknap, City Supervisor
ADDITIONAL PRESENTER(S)	**OTHER RESOURCES**

DESCRIPTION

On January 1, 2022, the Community Development Team published a Request for Qualifications (RFQ) for professional design and engineering services for the Downtown Streetscape Project. The request included landscape architecture, engineering design, and cost estimation for improvements downtown. There will also be a significant public outreach and engagement component to the effort.

A five-member committee consisting of staff from Community Development, Parks, the Farmers Market, and Public Works and Services evaluated the seven Statement of Qualifications (SOQs) received. The committee interviewed two consultant teams, ultimately selecting a group led by Welch Comer of Coeur d' Alene, Idaho for the project. They have worked on a number of infrastructure and design projects for the City in recent years and have measurable experience in urban design.

It is anticipated the project will commence shortly after execution of the contract, and culminate in a 30-60% conceptual design, complete with a phasing plan and cost estimate. The final conceptual plan will be presented to City Council for approval. This will inform a subsequent effort to prepare detailed construction drawings, a cost estimate, and alternatives to phasing. Commencement of construction will depend on project cost and available funding.

Staff has prepared a professional services agreement and associated fees for Council's review and approval. The $161,000 contract will be split equally with the Moscow Urban Renewal Agency. The majority of the contract will be executed in FY 2022. However, given the anticipated schedule, a portion of the work will extend into FY 2023. The City allocated $60,000 toward the effort in the current fiscal year, and will plan for the remainder as the FY 2023 budget is developed.

The Public Works/Finance Committee recommended approval of the contract on April 25, 2022.

STAFF RECOMMENDATION

Approve the Professional Services Agreement with Welch Comer.

PROPOSED ACTIONS

PROPOSED ACTIONS: Approval of the Professional Services Agreement with Welch Comer; or take other action deemed appropriate.

FISCAL IMPACT

The $161,000 fee for design services will be split equally with the Moscow Urban Renewal Agency.

PERSONNEL IMPACT

ATTACHMENTS

1. Welch Comer SOQ
2. Professional Services Contract-Downtown Streetscape Project_final
3. 2022 Downtown Streetscape RFQ - Complete

Downtown Streetscape Design Project

City of Moscow

February 4, 2022

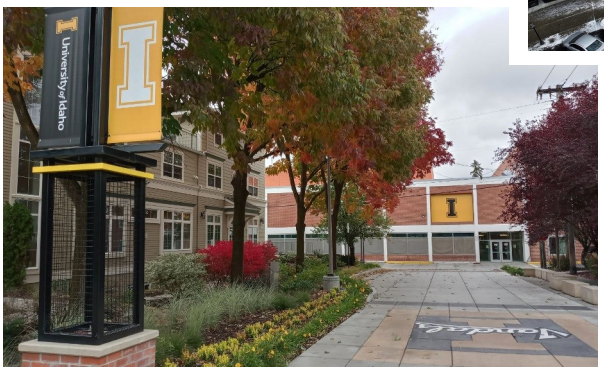

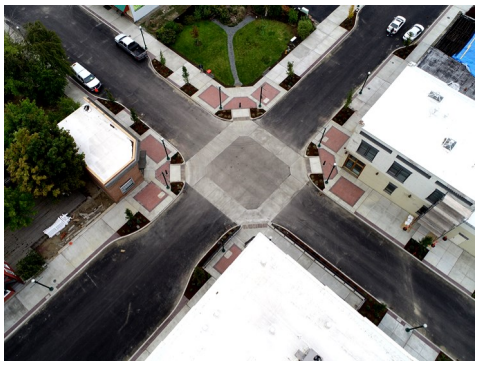

Statement of Qualifications

Submitted by:

WELCH-COMER
ENGINEERS | SURVEYORS

BWA Bernardo | Wills
ARCHITECTS PC

CITY OF MOSCOW 1887 IDAHO

WELCH-COMER
ENGINEERS | SURVEYORS

www.welchcomer.com

O: 208-664-9382
F: 208-664-5946

330 E. Lakeside Avenue, Suite 101
Coeur d'Alene, ID 83814

February 4, 2022

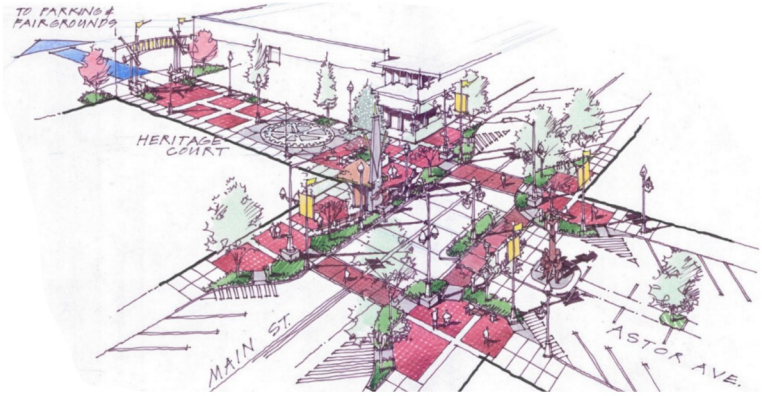

Cody Riddle, Deputy City Supervisor
City of Moscow
P.O. Box 9203
Moscow, ID 83843

RE: Submittal for the City of Moscow Downtown Streetscape Design Project

Dear Mr. Riddle and the Selection Committee:

Moscow's downtown is a vibrant place and proposed improvements will only add to its community value. Physical renovations and fine-tuning of the community spaces will enhance the vitality of your downtown core.

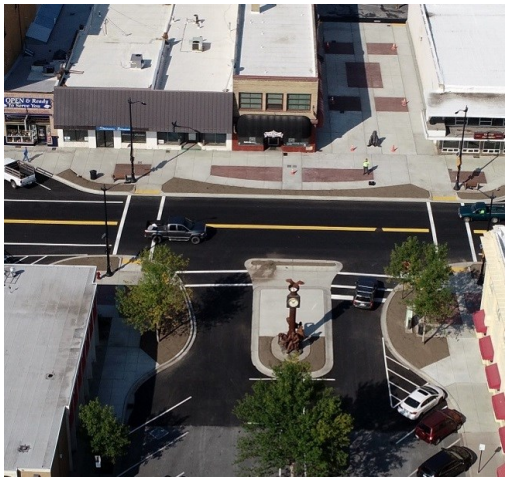

Based on recent discussions with you, several downtown business owners, and our collective familiarity with Moscow, we believe our team greatly benefits your project. We understand your priorities and have identified three focus areas in our proposal:

- ☑ **Infrastructure (Physical Condition):** Comprehensive inventory (parking, plantings, drainage, water, sewer, benches, lights, bollards, crosswalks, etc.) to gain a clear picture of the items requiring repair or replacement.
- ☑ **Community Health (Environmental Condition):** Thoughtful additions can make all the difference. Creative solutions for stormwater treatment and disposal, trash locations, lighting, and more can have a significant impact on the health and safety of downtown environments.
- ☑ **Placemaking (Social Condition):** Your downtown has an established "sense of place". Our urban designers will suggest opportunities to upgrade gathering space in underutilized areas, improve the ambience, and expand functionality.

Our submittal demonstrates our downtown revitalization expertise, service-oriented business philosophy, and keen ability to enrich communities through placemaking. We encourage you to contact any of our previous clients to gain an independent evaluation of our team's performance.

Sincerely,

Philip F. Boyd, PE
President, Principal Engineer

Table of Contents

Item	Page
Cover	1
Table of Contents/Transmittal Letter	2
Section I: Description of the Respondent	
Firm Description	3
Organizational Chart	4
Key Professionals/Resumes	4-7
Section II: Narrative	
Specialized Project Experience	8-9
Project Understanding & Approach	10-13
Section III: Relevant Project Experience	14-15

Welch Comer Engineers will lead the project with partner BWA for landscape architecture and Placemaking. Our team includes representatives from GPI (geotechnical investigation and design), AEI (electrical engineering), BDS Planning (special facilitator), and AEC (NEPA, if needed). Firm profiles for Welch Comer and BWA are provided in this section.

Welch Comer Firm Profile

Welch Comer's offices in Coeur d'Alene and Spokane Valley offer you 28 professionals with specialties in downtown revitalization, wastewater planning and design, municipal water services, transportation planning and design, traffic analysis, recreation, funding, planning, construction administration, and surveying. Welch Comer's service area is relatively small in order to allow us to be dedicated and responsive to our clients.

Commitment to Community: When selecting Welch Comer, you get exceedingly capable and experienced engineers who recognize the importance of getting to know each client and their community. The result is a top level of service, tailored to meet the specific needs of each client, accompanied by a high level of technical expertise and efficiency.

Awards: We have been honored to have been awarded with the following awards recently.

- Seltice Way, Coeur d'Alene (1st Place/ACEC ID/2019)
- Granite-Reeder Sewer District Wastewater Treatment (3rd Place/ACEC ID/2018)
- Hawthorne Avenue Ph 2, Colville (1st Place/ACEC WA/2017)
- Four Corners and BLM Master Plan, Coeur d'Alene (1st Place/ACEC ID/2016)
- Cassia Reservoir, Bonners Ferry (Honorable Mention/ACEC ID/2016)
- Hawthorne Ave., Colville (3rd Place/ACEC WA, 2016)
- McEuen Park, Coeur d'Alene (1st Place/ACEC ID/2015)
- "Local Gem" award, Natural Resources Committee of the CDA Chamber of Commerce, 2015

Legal Structure: S-Corporation licensed in Idaho and Washington. Welch Comer is also 100% Employee Owned.

Years in Business: 42

Areas of Expertise: Downtown Revitalization, Transportation, Water, Sewer, Stormwater, Planning, Funding, Construction Management, and Surveying

Number of employees: 28

Office Locations:
Idaho: 330 E. Lakeside Avenue, Suite 101, Coeur d'Alene, ID 83814

Washington: 5620 E. Desmet Ave, Spokane Valley, WA 99212

Principals-in-Charge:
Phil Boyd, President
Matt Gillis, Vice President
Necia Maiani, Vice President
Steve Cordes, Principal

Average Staff Tenure: 11 Years

Seltice Way, ACEC ID, 1st Place, Transportation

BWA Firm Profile

The Bernardo|Wills Architects, PC (BWA) team of landscape architects, architects, planners, and interior designers create exceptional places by enriching the aesthetics, sustainability, and function of projects they design. Our staff of professionally licensed landscape architects has served public works and private sector clients in the Pacific Northwest for over 35 years. Our deep and unwavering commitment to our clients' needs inspires us to create landscapes that embody their vision. BWA excels at urban design, streetscape development, community entry gateways, public plazas, university campuses, parks and recreation, multimodal trails, master planning - focusing on designs that contribute to a 'Sense of Place' within its context or community.

Legal Structure: S-Corporation

Years in Business: 31

Areas of Expertise: Downtown revitalization, landscape architecture, architecture, and interior design

Number of employees: 45

Office Location: 153 S. Jefferson Street, Spokane, WA 99201

Principals-in-Charge:
Gary Bernardo, AIA, President
Robert Pace, AIA, Secretary/Treasurer
Dell Hatch, ASLA, Vice President

Team Structure

Moscow Downtown Streetscape Project
Cody Riddle, Deputy City Supervisor

Project Management
Phil Boyd, PE—Project Director
Matt Gillis, PE—Project Manager

Phase I

Public Engagement
Phil Boyd
Matt Gillis
Brian Scott
Courtney Kramer
Dell Hatch

Inventory
Matt Gillis
Adam Dorsey
Bill LaRue
WC Surveyors
Ray Watkins

Conceptual Design
Phil Boyd
Dell Hatch
Matt Gillis
Adam Dorsey
Bill LaRue
Andy Abrams

Design Development & Cost Est
Matt Gillis
Adam Dorsey
Bill LaRue
Michelle Anderson
Ray Watkins

Phase II

Construction Drawing & Project Bid
Matt Gillis
Adam Dorsey
Bill LaRue
Ray Watkins
Andy Abrams

Construction Administration
Matt Gillis
Adam Dorsey
Bill LaRue
WC Surveyors
Ray Watkins
WC Construction Inspectors
WC Construction Admin

Key Professionals/Resumes

Phil Boyd, P.E.
Welch Comer
Project Director

Phil is a master at big ideas. He was instrumental in both Atlas Waterfront Park and McEuen Park in Coeur d'Alene. Recently, he completed downtown master plans in Colville, Pullman, and Lewiston. Colville's Heritage Court was constructed in 2021 after Phil helped to secure funding from multiple sources. His creativity, unique ideas, and experience will benefit Moscow as you revitalize your downtown streetscape.

Moscow Downtown Tasks

- ☑ Client Interaction
- ☑ Community Engagement
- ☑ Property Owner Coordination
- ☑ Schedule/Budget Maintenance

- ☑ ID PE#: 7898
- ☑ Years of Experience: 30
- ☑ Office: Coeur d'Alene
- ☑ Years with WC: 27
- ☑ Employment: Welch Comer 1994—present
- ☑ Education: MS CE Washington State University, BS CE University of Idaho

Recent Relevant Projects (Reference)

- Atlas Waterfront Park & Master Plan, CDA, ID (1)
- Pullman Downtown Master Plan (2)
- Lewiston Downtown Master Plan (3)
- Colville WA, Downtown Master Plan (4)
- Heritage Court & Main Street Master Plan, Colville, WA (4)
- Memorial Park & Parking Improvements, CDA (1)
- Mullan Road Redevelopment, CDA (1)
- Four Corners/BLM Property Master Plan CDA (1)
- McEuen Park Master Plan and Design, CDA (1)

Matt Gillis, P.E.
Welch Comer
Project Manager

Matt's strength is taking Phil's vision & big ideas and distilling them into a specific design and executing the design and construction. His ability to tightly and efficiently manage his design team make he and Phil a very effective team. Matt has spent his career working with Moscow-sized cities. He has considerable experience developing, designing and constructing downtown revitalization projects in Post Falls, Colville, Hayden, and Priest River.

Moscow Downtown Tasks

- ☑ Design Team Lead
- ☑ Quality Control
- ☑ Staff Allocation
- ☑ Design Oversight

- ☑ ID PE#: 11034
- ☑ Years of Experience: 23
- ☑ Office: Coeur d'Alene
- ☑ Years with WC: 16
- ☑ Employment: Welch Comer 2006—present, Ruen Yeager 1998—2006
- ☑ Education: BS CE University of Idaho

Recent Relevant Projects (Reference)

- Main & Astor / Heritage Court (4)
- Lacrosse Ave, CDA (1)
- Seltice Way, CDA (1)
- Spokane Street, Post Falls (5)
- Priest River Downtown (6)
- Lilly Street, Moscow (13)
- A Street, Moscow (13)
- 7th Street & Admin Circle, U of I (10)

Dell Hatch, ASLA
BWA
Downtown Expert

Dell's conscious, deliberate approach to addressing the client's goals yields extraordinary, responsive design solutions. His outstanding graphics capabilities allow clients to clearly envision proposed designs. His experience includes public spaces and urban planning, community gateways, and recreational and land-use master planning.

Moscow Downtown Tasks

- ☑ Community Engagement
- ☑ Placemaking Components
- ☑ Renderings/Visualizations

- ☑ Licensed in WA/ID/AZ/NV
- ☑ Years Experience: 37
- ☑ Office: Spokane
- ☑ Years with BWA: 13
- ☑ Education: BS Landscape Architecture, University of Idaho

Recent Relevant Projects (Reference)

- 4 Park Conceptual Designs, Moscow (7)
- Entry Improvements, Moscow (11)
- McEuen Park Development, Coeur d'Alene (1)
- Wall Street Streetscape, Spokane (8)
- SIA Felts Field Gateway, Spokane (12)
- 4 Corners/BLM Master Plan (1)
- Hayden Downtown Revitalization (14)

Courtney Kramer
Welch Comer
Community Engagement Specialist

As the granddaughter of two Pullman-area farm families, Courtney will use her local knowledge, experience as a downtown manager and strategic community building skills to support the project's public outreach efforts for the entire project. Courtney will work with the City to envision, plan, and execute open houses and small group meetings. She will be readily accessible to the City and community for informal project conversations.

Moscow Downtown Tasks

- ☑ Community engagement
- ☑ Business owner coordination
- ☑ Downtown association coordination

- ☑ Years Experience: 14
- ☑ Employment History: WSU Foundation (2020—2021), Executive Director Beautiful Downtown Lewiston Revitalization Corp (2015—2020)

Adam Dorsey, P.E.
Welch Comer
Project Engineer

Adam's passion is delivering quality designs for municipalities and he has his hands on all Welch Comer's complex transportation and downtown urban design projects. His special skills are in urban roadway design, ADA requirements, roundabouts, signals, and drainage. His experience benefits Moscow by providing high quality design efficiently.

Moscow Downtown Tasks

- ☑ Street, sidewalk, drainage, utility, and ADA design
- ☑ Bid package preparation
- ☑ Opinions of cost
- ☑ Utility coordination

- ☑ ID PE#: 15695
- ☑ Years Experience: 14
- ☑ Office: Coeur d'Alene
- ☑ Years with WC: 14
- ☑ Employment: Welch Comer 2007—present
- ☑ Education: BS CE WSU

Recent Relevant Projects (Reference)

- Priest River Downtown (6)
- Seltice Way, Coeur d'Alene (1)
- Spokane Street, Post Falls (5)
- Lilly Street & A Street, Moscow (13)
- Front Avenue, Coeur d'Alene (1)
- Argonne Widening, Millwood (9)

Bill LaRue, ASLA
BWA
Landscape Architect

Bill has extensive experience in creating community spaces and streetscapes, and a diverse background in the design of community recreation, education and outdoor sports complexes. He excels at preparation of contract documents.

Moscow Downtown Tasks

- ☑ Landscape design
- ☑ Public space amenities

- ☑ Licensed in ID/WA
- ☑ Years Experience: 36
- ☑ Office: Spokane
- ☑ Years with BWA: 12
- ☑ Employment: BWA 2010—present
- ☑ Education: BS Landscape Architecture, University of Idaho

Recent Relevant Projects (Reference)

- Lola Clyde Park Master Plan, Moscow (7)
- ICCA Arena, U of I (10)
- South Campus Mall, U of I (10)

Brian Scott
BDS Planning
Conflict Resolver

Brian is an expert at helping stakeholders gain consensus. His skills will be used to supplement Phil and Courtney only if necessary as the project progresses. Brian has 40 years of experience and hundreds of projects where he's taken complex urban projects and issues, and explained them in every day terms to reach consensus amongst diverse groups of people.

Moscow Downtown Tasks

- ☑ Stakeholder engagement
- ☑ Conflict resolution, if needed

Recent Relevant Projects (Reference)

- Lewiston Downtown Master Plan (3)
- Pullman Downtown Master Plan (2)
- Colville Downtown Master Plan (4)

Other key personnel on our team includes:

- ☑ Andy Abrams, P.E., Geo Professionals Innovation (GPI) - Geotechnical investigation, road section design
- ☑ Michelle Anderson, Biologist, Anderson Environmental Consultants—NEPA processes, if needed
- ☑ Ray Watkins, P.E., AEI—Electrical Engineering for lighting
- ☑ Mike Hathaway, P.L.S.—Welch Comer—Topographic and boundary survey

Welch Comer has worked with Andy, Michelle, and Ray on many other local Inland Northwest Projects.

Key Professionals' Project References

Name	Title	Organization	Email	Phone Number
(1) Chris Bosley, P.E.	City Engineer	Coeur d'Alene	cbosley@cdaid.org	(208) 769–2216
(2) Shawn Kohtz, P.E.	Public Works Director	Pullman	shawn.kohtz@pullman–wa.gov	(509) 338–3220
(3) Mike Cannon	Project Manager (BLD President during the project)	My Architect	Mike.cannon@myarchitectaia.com	(208)305–6268
(4) Ralph Lane	Mayor	Colville	mayor@colville.wa.us	(509)684–5095
(5) Bill Melvin, P.E.	City Engineer	Post Falls	bmelvin@postfallsidaho.org	(208) 773–4235
(6) Jim Martin	Former Mayor	Priest River	jkmartin83856@gmail.com	(208) 610–0315
(7) David Schott	Parks & Faculties Director	Moscow	dschott@ci.moscow.id.us	(208) 883–7098
(8) Marcia Davis, P.E.	Integrated Capital Management	Spokane	mdavis@spokanecity.org	(509) 625–6398
(9) Paul Allen	Public Works Director	Millwood	publicworks@millwoodwa.us	(509) 924–0960
(10) Ray Pankopf	Director of Architecture & Engr	University of Idaho	rayp@uidaho.edu	(208) 885–7817
(11) Bill Belnap	City Supervisor	Moscow	bbelknap@ci.moscow.id.us	(208) 883–7011
(12) Lisa L. Corcoran	PM, Planning & Engr Dept	Spokane Intl Airport	Lcorcoran@spokaneairports.net	(509) 808–6577
(13) Scott Bontrager, P.E.	City Engineer	Moscow	sbontrager@ci.moscow.id.us	(208)883–7034
(14) Donna Phillips	Community Development Dir.	City of Hayden	dphillips@cityofhaydenid.us	(208)209–2020

"...One of the strengths of Welch Comer's staff is their obvious passion for problem solving. Whether they are developing a roadway design, a planning document, or managing a complex construction project, they work energetically."

Bill Melvin, PE, Post Falls City Engineer

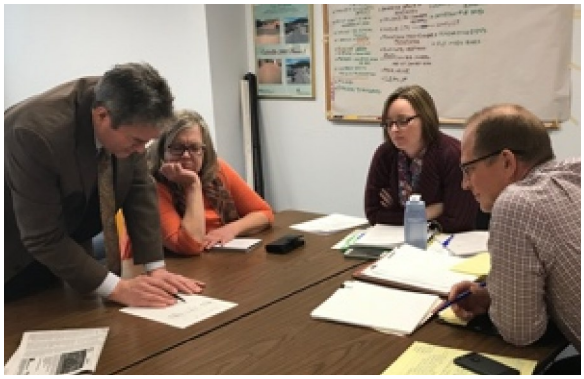

Brian (BDS) and Phil (Welch Comer) facilitating a workshop for the Colville Downtown Vitalization Plan

Courtney Kramer facilitating a large public meeting

"A key ingredient to Dell's success is his ability to gain the support of not only project–affected stakeholders, but also interested stakeholders throughout the community."

Tony Berns, Executive Director IgniteCDA

Relevant Specialized Planning or Design Experience

Welch Comer Engineers and BWA have unique downtown planning and design experience. Detailed project examples will be provided in Section III. In this section, we provide a list of relevant projects and special experience. The "Professional Qualifications of the Firm and Team" were provided in Section I.

McEuen Park, Coeur d'Alene—Community Visioning

The McEuen Park & Front Avenue project had unique challenges from the beginning. The site was mostly unused, but was home to ballfields, open space, and a large parking lot. The community was very passionate about proposed improvements—particularly boaters and the softball leagues. In addition to overall project management and design/construction oversight, Welch Comer filled the following unique public involvement roles:

- Facilitating a 21-person steering committee to find consensus among contending opinions.
- Condensing public opinion survey data so the vast amount of information could be easily understood.
- Preparing meaningful and easily understood graphics that helped the Steering Committee, Council, and public understand how the community vision would eventually unfold.
- Effectively leading presentations to the City Council and facilitation of sometimes passionate public workshops.

21-Person Steering Committee

Attendee at an Open House

VALUE to MOSCOW

- ⇒ Experts in public involvement
- ⇒ Experts in public spaces
- ⇒ Maximizing use of available space
- ⇒ Efficient management of Steering Committee
- ⇒ Balancing numerous public opinions

Memorial Field, Coeur d'Alene—Balancing Feedback

Memorial Field in Coeur d'Alene was a community treasure, but needed a facelift. Understandably, the community had concerns. Additionally, Memorial Field sits at the entrance to historic neighborhood, Fort Grounds. To successfully facilitate a steering committee to find consensus among contending opinions was challenging, including:

- Knowing the Fort Grounds residents would be powerfully vocal, we structured public outreach to make the Fort residents heard while also balancing the loudest voice with the more quiet majority.
- The team met individually with many small groups who had singular concerns including: Fort Grounds, Centennial Trail, Riverstone HOA, Disability Action Center, Regulatory Agencies, NIC/University of Idaho, Human Rights Education Institute (HREI), and the Skate Park Users. These small group meetings were to avoid singular issues from dominating the open houses.

Steering Committee Walking Tour

Attendees at an Open House

VALUE to MOSCOW

- ⇒ Sensitive to community gems
- ⇒ Balancing stakeholder input
- ⇒ Balancing requirements of all regulatory agencies
- ⇒ Balancing numerous public opinions

Visualizations

Renderings of proposed changes help community leaders, business owners, and the public visualize the future. High quality visualizations add value to the project identification, selection, and priority processes. BWA produces renderings that are second to none and have helped communities all over the Inland Northwest really visualize projects before they are constructed.

McEuen Park, Coeur d'Alene, ID

Wall Street, Spokane, WA

Front Avenue, Coeur d'Alene, ID

Welch Comer – BWA Collaborations

The Welch Comer-BWA team has been successful over the years teaming on regionally significant projects, as shown by the list below:

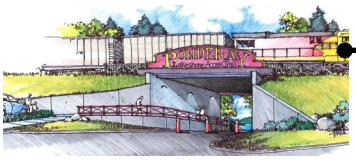

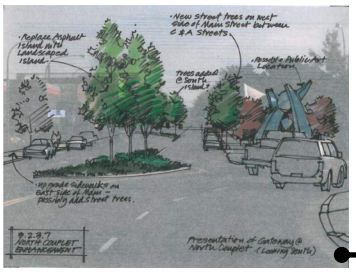

Project
4 Corners Master Plan/Memorial Field, Coeur d'Alene
St. Maries Revitalization, St. Maries, ID
McEuen Park, Coeur d'Alene
Hayden Downtown Revitalization, Hayden, ID
Colville Downtown Vitalization, Colville, WA
Atlas Waterfront Development and Park, Coeur d'Alene/igniteCDA
Ponderay Water Access, Ponderay, ID
4th/Honeysuckle Roundabout, Hayden, ID
Bonners Ferry Downtown Revitalization, Bonners Ferry, ID
4 Corners and BLM Master Plan and Memorial Field, CDA, ID
Priest River Downtown Revitalization, Priest River, ID
Heritage Court, Colville, WA
War Memorial Park, Sandpoint, ID
Seltice Way, Coeur d'Alene, ID
Coeur d'Alene Lake Drive Traffic Calming, East Side HD, ID
Several projects for the University of Idaho
Moscow Entry Beautification, Moscow, ID

Understanding and Approach to the Project

Our approach is tailored to three focus areas: Infrastructure (Physical Condition), Community Health (Environmental Condition), and Placemaking (Social Condition). Balancing all three are vital to sustained success in your downtown.

Phase I (April—August)

Review Available Information & Infrastructure Inventory (April/May): Prior to any design or public outreach work our team will conduct a thorough inventory of existing information. This effort will be exhaustive and will build a strong foundation for your project. We will:

- Review records of underground & overhead utilities
- Discuss challenges with maintenance staff
- Review existing parking saturation/vacancy rates
- Review accident data & ped safety concerns
- Analyze effectiveness of existing public spaces
- Carefully review existing stormwater deficiencies

Field Survey: Our in-house crews are experienced with surveying urban environments. We will scan features to create highly detailed topographic surfaces. In addition, we utilize a 360-degree camera to record detailed imagery of the sidewalk, building faces, and public spaces. Our data is uploaded to Google Streetview to be accessed publicly.

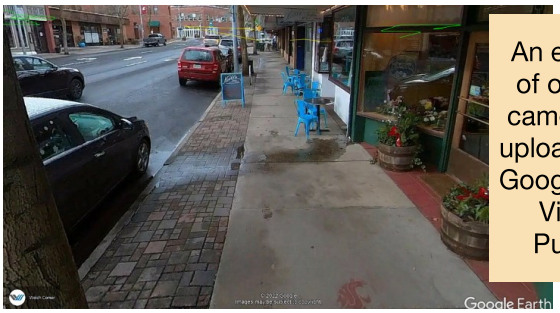

An example of our 360⁰ camera data uploaded into Google Street View in Pullman

Public Engagement (April—Construction): Intentional public engagement is integral to a project like yours and must occur in a variety of forms starting with the initial planning phase and continuing through construction. Our team has successful experience with diverse types of in-person and virtual engagement to ensure the final project reflects the community's and City's vision.

Steering Committee—We recommend the City appoint a small steering committee comprised of city leaders and staff, downtown property/business owners, university representatives, and other community members (Chamber of Commerce, Farmer's Market, etc.). The steering committee listens to details, provides guidance, and, most importantly, provides a sense of community ownership.

Stakeholder Interviews—Stakeholder outreach will be sustained during the entire project starting with initial interviews/focus groups to aid in the development of project priorities and feedback on design concepts. Stakeholders include community groups, business and property owners, major institutions and others with a direct role in the future of downtown.

Open Houses—Open houses will be held during the conceptual design stage to gather feedback from the public.

Virtual Engagement Tools—Online engagement tools (SurveyMonkey, Konveio, Concept Board, etc.) are vitally important to engaging the public with and without the influence of the pandemic.

A quick tidbit...

Our team members spoke with citizens and business owners along Main Street. We found that most enjoy the downtown and are interested in improvements to parking, sidewalks, and aesthetics. We expect engaged stakeholders for this project.

Our team is especially adept at public facilitation and speaking in front of large crowds

Boots on the Ground—Courtney Kramer, former Beautiful Downtown Lewiston Executive Director, and our Community Outreach Coordinator will interface with the City, stakeholders, and downtown business and property owners. Courtney lives in Clarkston so she can efficiently work in Moscow ensuring we reach the community on a regular basis. In fact, some of this outreach has already occurred.

Placemaking: A great downtown is more than successful businesses and adequate parking. Ultimately, Placemaking combines the physical, environmental, and social conditions to make people feel comfortable. We have used the strategies from "Projects for Public Spaces" on many past projects.

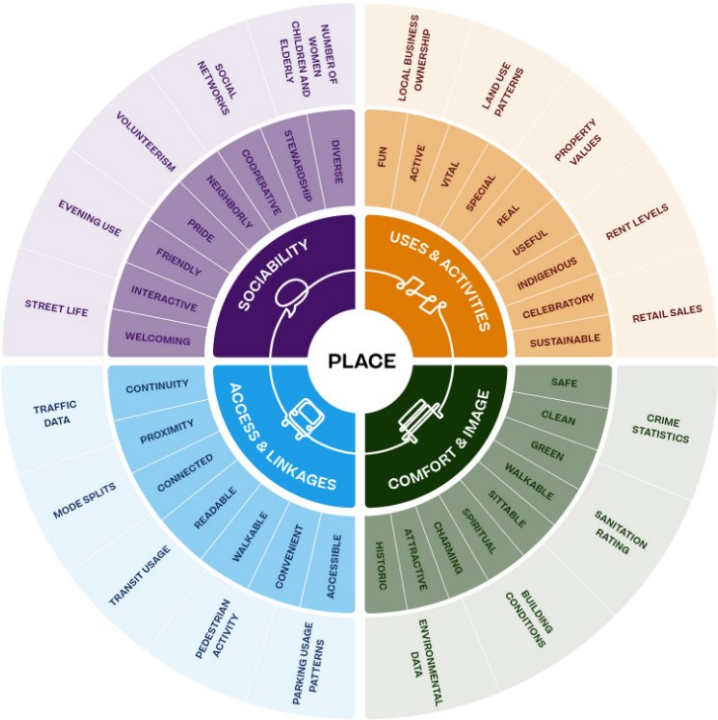

Great downtowns are created when the community health, infrastructure, and Placemaking are all working together. Credit: Project for Public Spaces

The principles in "Project for Public Spaces" aligns with the three focus areas we have identified for your project: Physical Condition, Environmental Condition, and Social Condition. Along Main Street you already have appealing spaces that promote safety, encourage commerce, and develop culture. There is room to make your downtown even more appealing. On the next page, we show a few of our initial thoughts at 5th to create even better spaces.

Conceptual Design Alternatives—Working concurrently with the initial public outreach, our team will begin a Concept Design Alternatives phase, advancing the places to the 10 to 15% level, prepare cost estimates based on quantity take offs and unit bid prices from recent projects. This allows Moscow to evaluate overall funding needs and to start prioritizing project elements to meet available funding. Within the concept design alternatives, the team will balance the desire for an infrastructure "facelift" and the need for enhanced public spaces. To communicate the alternatives to the public and City Council, the team will produce color concept renderings, which help to visualize options.

We will develop criteria for project prioritization, including: safety, aesthetics, maintenance, cost, etc.

Preferred Alternative—Along with city staff, the Welch Comer design team will present the recommended alternatives to City Council for approval. Once approved, the team will move into Phase II.

Phase II (August—November)

Construction Drawings: We will deploy our team of engineers and landscape architects to execute the bid package that reflects the vision for the downtown.

Key Issues to Address During Design—Downtowns are complex. Many variables must be juggled to achieve Moscow's vision. Our design phase approach identifies typical and project specific elements that must be addressed for a successful project.

Matching Existing Features and Roadway Geometry—In a downtown, every edge of the new improvements must match precisely into an existing feature. Those features could be door thresholds, building facades, or driveways. Ensuring our project matches all adjacent elements perfectly requires careful attention to grading details and adjustments to the horizontal and vertical roadway geometry.

Enhanced Traffic Calming and Increased Ease of Pedestrian Movement—Downtowns can flourish when pedestrians feel safe and drivers are aware.

ADA Compliance—Compliance with Americans with Disabilities Act (ADA) is a high priority design element. Carefully designing sidewalks, pedestrian ramps, driveways, and features to specific maximum slopes and configurations is important.

Settling—While hardscape elements like concrete or clay pavers are desirable elements because they add color and texture, they have a tendency to settle if not constructed correctly. Our engineers and landscape architects will work closely to properly design pavers to ensure long-term stability.

Inter-department Coordination—It's likely this project will be managed primarily by the Public Works or Engineering Department, but it will be important to coordinate with multiplle departments including:

- Planning—to ensure all zoning, setback, parking, tree spacing, etc., concerns are heard.
- Transit—to understand any impacts to the existing or future transit route system.
- Police & Fire—to address any emergency access or response time requirements.
- Street Maintenance—to address snow plowing, stormwater, and other maintenance concerns
- Parks—to coordinate on urban forest topics.

Balance of Aesthetics and Maintenance—While downtowns should be beautiful and inviting, they also need to be maintainable. Whatever furniture is installed, landscaping is planted, and art is installed, Moscow must be able to cost efficiently maintain it. Our job is to find that balance.

5th/Main ideas for improving:

- ⇒ Infrastructure (Physical Condition)
- ⇒ Community Health (Environmental Condition)
- ⇒ Placemaking (Social Condition)

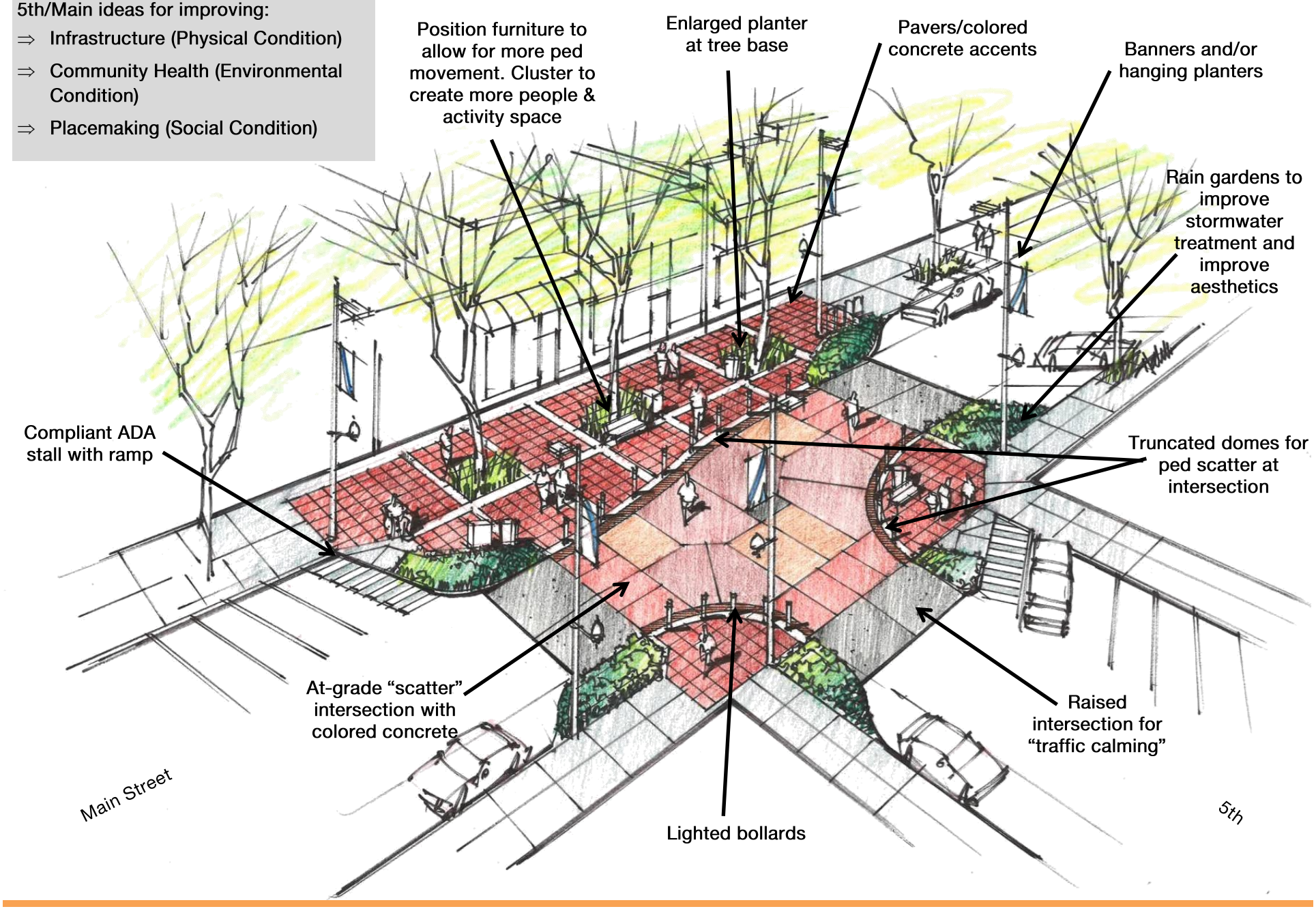

Existing & Proposed Utilities—While streets within are under construction, it is efficient to replace utilities that are in bad shape or close to their useful life.

Traffic Control Design—Traffic on Main Street and the state highway (couplet) needs to continue during construction. A carefully designed traffic control plan that allows peds, bikes and cars to move through and within downtown while allowing the contractor a safe work zone is important.

Stormwater—It is likely revitalizing streets within downtown will require retrofitting and connecting into the existing stormwater system. Our engineers will take time to understand the existing system. Additionally, we hope to improve existing conditions such as water flowing over sidewalk and also improve treatment with strategically placed rain gardens.

Design Geometry vs. Snow Plowing—Like aesthetics vs. maintenance, understanding what Moscow does with winter snow will be important.

Construction Specifications—Producing accurate and buildable construction drawings is essential and the specifications are equally important. Over the last 20 years we've refined our downtown revitalization project specifications. For example, we have strict specification criteria on how contractors will provide business access at all times during construction. Additionally, ensuring reconnection of building water/ sewer services is difficult and critical during downtown projects.

Environmental Documentation—If necessary, NEPA documentation will be pursued early in the design phase. Wetlands, cultural concerns, or historic building can slow this process if not conducted early.

Parking During Construction—Access to downtown commerce is critical and can become challenging during construction. Coordinating a strategy of temporary parking or special access during the design phase is key to minimizing the impact to businesses.

Constructability Review—A step our team completes with our downtown projects is a constructability review with local contractors. We will spend a couple of hours with a few regional contractors reviewing preliminary plans and getting their feedback regarding construction sequencing, business access, staging, material supply, and traffic control.

Project Bid (Winter 2022/2023): Our approach to bidding the project is to provide clarity to improve the bidders' understanding and reduce contingency pricing. We know the project complexities, which materials may be long lead (especially during the pandemic), so we conduct comprehensive pre-bid presentations and on site meetings to carefully walk the bidders through the CD's to transfer this knowledge to improve their understanding. All the Q&A is documented and issued as an addendum. We have dedicated project administrators familiar with Idaho bidding rules and we routinely provide full service bidding services for our municipal clients, including:

- Write and publish the bid advertisement
- Answer bidder questions and issue addenda
- Facilitate the bid opening, prepare bid tabulation, review bids for responsiveness and make a recommendation of award
- Assist the City in executing a contract

Construction Administration (Spring/ Summer 2023): Construction is the most disruptive portion of the project for the community. We provide construction phase services on 99% of our projects including construction staking, construction observation, and construction administration. This is a roll we take very seriously. Our job is to ensure your project is constructed in accordance with the plans and specifications with the least disruption possible.

Our inspectors will be on site to monitor construction, troubleshoot problems, anticipate issues and work closely with business owners to address their concerns, and communicate progress to the City. Our designers are involved during construction conducting weekly construction meetings, communicating with the City, and maintaining accurate documentation. We prepare newsletters to keep the community informed.

We track quantities daily and confirm weekly with the contractor. We prepare pay requests for City review and only recommend payment for satisfactorily completed work.

At closeout, we provide a book that includes submittals, record drawings, construction photos, and financial information. We can also administer the funding agency process so that the funding and the City's match are clear all throughout the project.

Pullman Downtown Master Plan, Design & Construction

Welch Comer is currently working with the City of Pullman to revitalize a portion of their downtown. While some of the same tools would be used in Moscow, Pullman is very different. Their topographic, waterway, and railroad restrictions limit what they can do. Nevertheless, Welch Comer is working diligently to find solutions that best meet the needs for the City and the people of Pullman.

Total Project Cost: Scheduled for 2023/2024

Team Members Involved:

⇒ Phil Boyd, P.E.— Overall Project Manager
⇒ Matt Gillis, P.E.— Design Manager
⇒ Dell Hatch, ASLA – Landscape Architect
⇒ Adam Dorsey, P.E.—Project Engineer
⇒ Brian Scott—Public Involvement
⇒ Courtney Kramer—Public Involvement

Project Reference:
Shawn Kohtz, P.E., Public Works Director, City of Pullman
190 SE Crestview St, A, Pullman, WA 99163 | 509-338-3220

---

4 Corners Master Plan, Memorial Field, Mullan Avenue, Coeur d'Alene

Welch Comer, with BWA, completed the Memorial Field Revitalization project for the City of Coeur d'Alene in 2016. This project transformed a wide, unsafe roadway and parking area into a multi-modal roadway with a beautiful and functional public space. Phil led the City and the Urban Renewal Agency through the master planning, design and construction. The site is very popular today.

Total Project Cost: $3,000,000

Team Members Involved:

⇒ Phil Boyd, P.E.— Master Planning Phase Project Manager
⇒ Dell Hatch, ASLA – Landscape Architect
⇒ Adam Dorsey, P.E.—Design Engineer

Project Reference:
Chris Bosley, P.E. - City Engineer, City of Coeur d'Alene
710 E. Mullan Ave, CdA, ID 83814 | 208-769-2216

Colville Downtown Master Plan & Heritage Square

Welch Comer has worked to transform Colville's downtown over the last 20 years. The latest revitalization project involved Welch Comer securing Complete Streets funding through the state of Washington and reconfiguring the "100%" intersection in downtown. Phil's leadership during the planning and public outreach process, and Matt's during the design & construction were important to garner public support and deliver Colville a needed enhancement to their downtown.

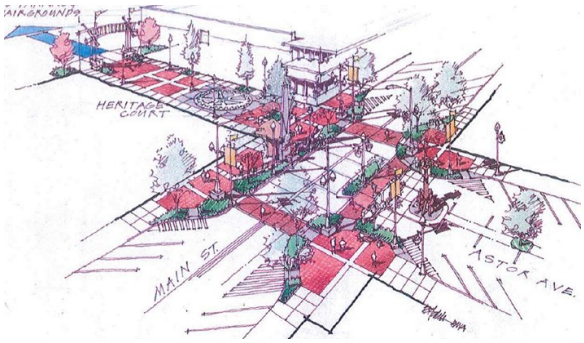

Total Project Cost: $1,200,000

Team Members Involved:

- ⇒ Phil Boyd, P.E.— Master Planning Phase Project Manager
- ⇒ Matt Gillis, P.E.— Design Phase Project Manager
- ⇒ Dell Hatch, ASLA – Landscape Architect

Project Reference:
Ralph Lane - Mayor, City of Colville
170 S. Oak, Colville, WA 99114 | 509-684-5095

McEuen Park, Coeur d'Alene

Welch Comer, along with BWA, provided master planning, design, and construction phase services for the 20+ acres park. The planning team was assisted and directed by a 21-person, mayoral-appointed steering committee. The public was very engaged in this high profile project, so intentional and strategic public involvement provided invaluable. Notable park elements included underground parking garage, separated bicycle & pedestrians facilities, dog park, basketball, pickleball & tennis, spray pad and large play structure.

Total Project Cost: $19,000,000

Team Members Involved:

- ⇒ Phil Boyd, P.E.—PM/Public Involvement Lead
- ⇒ Dell Hatch, ASLA – Landscape Architect
- ⇒ Matt Gillis, P.E.—Design Lead
- ⇒ Adam Dorsey, P.E.—Design Engineer

Project Reference:
Bill Greenwood - Parks Director, City of Coeur d'Alene
710 E. Mullan Ave, CdA, ID 83814 | 208-769-2252

AGREEMENT FOR PROFESSIONAL SERVICES
FOR DOWNTOWN STREETSCAPE DESIGN CONCEPTS
BETWEEN CITY OF MOSCOW, IDAHO AND
WELCH-COMER, COEUR D' ALENE, IDAHO

THIS AGREEMENT FOR PROFESSIONAL SERVICES FOR DOWNTOWN STREETSCAPE DESIGN CONCEPTS (hereinafter "Agreement"), is made and entered into this ____ day of _____, 2022, by and between City of Moscow, Idaho, a municipal corporation of the State of Idaho, 206 East Third Street, Moscow, Idaho, 83843 (hereinafter "CITY"), and Welch Comer & Associates, Inc., a corporation of the State of Idaho, licensed to conduct business in the State of Idaho, with offices located at 330 E. Lakeside Avenue, Suite 101, Coeur d' Alene, Idaho, 83814 (hereinafter "CONSULTANT").

W I T N E S S E T H:

WHEREAS, CITY intends to develop a conceptual design for the downtown streetscape pursuant to the Scope of Work, see Attachment "A" (hereinafter the "Project"); and

WHEREAS, CITY intends the Project will result in the presentation of a final design concept with cost estimate to City Council; and

WHEREAS, the Project's resulting plan will inform an approach to phasing and budgeting of bidding and construction; and

WHEREAS, CONSULTANT agrees to perform the various professional services, including public outreach, required for the Project;

NOW, THEREFORE, the Parties to this Agreement, for and in consideration of the mutual covenants, promises, and stipulations contained herein, agree as follows:

SECTION 1: THE PROJECT

This Agreement for professional services will include design and engineering services related to the downtown streetscape. It will include an inventory of existing conditions, preparation of design alternatives, and community engagement with each phase. It will culminate in a final conceptual design to be presented to City Council. CONSULTANT's approach offers transparency in documentation, collaboration with staff, the public, and clear communication with the City Council and other stakeholders, including a City-designated Advisory Committee.

As defined in the task plan, CONSULTANT will follow a structured method to arrive at a final design concept, complete with cost estimate and phasing, to be presented to City Council. This will enable CONSULTANT to perform the work in an orderly, efficient, and results-oriented manner. The tasks identified in the Scope of Services document, identified as Attachment "A", will be completed unless specifically noted otherwise.

SECTION 2: SCOPE OF WORK

CONSULTANT shall furnish services for the Project as specified in Attachment "A" (Scope of Work) of this Agreement, which is adopted and incorporated herein.

SECTION 3: COMPENSATION

The total cost to CITY for Consulting Services for the Project, as described in Section 1, shall be an amount not to exceed One-Hundred Sixty-One Thousand Dollars ($161,000) for work performed by CONSULTANT as shown in Attachment "B" of this Agreement.

SECTION 4: CONSULTANT RESPONSIBILITIES

CONSULTANT shall complete the entire work on Project. Such work shall be conducted in a good and workmanlike manner which meets or exceeds industry standards.

CONSULTANT shall release all rights to the Project after receipt of the final payment.

CONSULTANT shall not use or sell the work created pursuant to this Agreement, without express written authorization by CITY.

CONSULTANT shall release any Copyright rights to the work created for the Project, at no additional cost to CITY.

SECTION 5: CITY RESPONSIBILITIES

CITY shall make available to CONSULTANT all technical data of record in CITY's possession required by CONSULTANT relating to this Project.

SECTION 6: PROJECT SCHEDULE

CONSULTANT shall achieve final completion of the project on or before November 30, 2022 as shown in Attachment "C" of this Agreement. In the event of unavoidable delays beyond CONSULTANT's control, CONSULTANT, upon concurrence of CITY, shall be granted a reasonable extension. The length of extensions due to such delays shall be as determined by CITY. CITY shall be notified of such delays or potential delays within two (2) working days of CONSULTANT's knowledge of such delays.

SECTION 7: INDEPENDENT CONTRACTOR

CITY and CONSULTANT hereto warrant by their signatures that no employer/employee relationship is established between CITY and CONSULTANT by the terms of this Agreement. It is understood by the Parties hereto that CONSULTANT is an independent contractor and, as such, neither it nor its employees, if any, are employees of CITY for purposes of tax, retirement system, or social security (FICA) withholding.

SECTION 8: TERMINATION

A. Termination of Agreement

This Agreement may be terminated by CONSULTANT upon thirty (30) days' written notice, should CITY fail to substantially perform in accordance with its terms through no fault of CONSULTANT. CITY may terminate this Agreement with thirty (30) days' written notice without cause and without further liability to CONSULTANT, except as designated by this Section. In the event of termination, CONSULTANT shall be paid for services performed to termination date, including direct expenses and a pro rata share of the fees based upon work completed. All Deliverables, whether partially or fully completed, related to the Project, produced by CONSULTANT as part of Project services, shall become the property of, and shall be surrendered to CITY at or before such termination and prior to payment. However, CITY agrees that all Deliverables provided or prepared by CONSULTANT are intended for the purposes of this Agreement only and any reuse or modification of the Deliverables by CITY or others for any other project or purpose shall be at CITY's or other's sole risk and without liability to CONSULTANT. CONSULTANT may retain copies of all Deliverables for its records.

B. Termination of the Project

If any portion of the Project covered by this Agreement shall be suspended, abated, abandoned or terminated, CITY shall pay CONSULTANT for the services rendered to the date of such suspended, abated, abandoned or terminated work; the payment to be based, insofar as possible, on the amounts established in this Agreement or, where this Agreement cannot be applied, the payment shall be based upon a reasonable estimate as mutually agreed upon between the Parties as to the percentage of the work completed.

SECTION 9: INSURANCE AND LIABILITY

A. Consultant's Professional Liability Insurance

In performance of professional services, CONSULTANT will use that degree of care and skill ordinarily exercised under similar circumstances by members of the consulting profession; and no warranty, either expressed or implied, is made in connection with rendering CONSULTANT's services. Should CONSULTANT or any of CONSULTANT's agents or employees be found to have been negligent in the performance of professional services from which CITY sustains damage, CONSULTANT has obtained Professional Liability Insurance in the amount of One Million Dollars ($1,000,000), and said insurance shall be held active for a two (2) year (minimum) period from the date of completion of the Project. CITY shall receive notice of any pending termination of said insurance within five (5) days of first notice to CONSULTANT.

B. Consultant's Additional Insurance

CONSULTANT shall maintain automobile insurance and statutory workers' compensation insurance coverage, employer's liability, and comprehensive general liability insurance coverage.

The comprehensive general liability insurance shall have a minimum limit of Five Hundred Thousand Dollars ($500,000) per claim and One Million Dollars ($1,000,000) aggregate, and CONSULTANT shall cause CITY to be named as an additional insured under said policy.

C. Indemnification

CONSULTANT agrees, to the fullest extent permitted by law, to indemnify and hold harmless CITY against damages, liability and costs arising from the negligent acts of CONSULTANT in the performance of professional services under this Agreement, to the extent that CONSULTANT is responsible for such damages, liabilities and costs on a comparative basis of fault and responsibility between CONSULTANT and CITY. CONSULTANT shall not be obligated to indemnify CITY for CITY's own negligence.

SECTION 10: CONFLICT OF INTEREST

CONSULTANT covenants that it presently has no interest and will not acquire any interest, direct or indirect, in the Project which would conflict in any manner or degree with the performance of services hereunder. CONSULTANT further covenants that, in performing this Agreement, it will employ no person who has any such interest. Should any conflict of interest arise during the performance of this Agreement, CONSULTANT shall immediately disclose such conflict to CITY.

SECTION 11: ENTIRE AGREEMENT, MODIFICATION AND ASSIGNABILITY

This Agreement, and the exhibits hereto, contain the entire Agreement between the Parties concerning the Project, and no statements, promises, or inducements made by either Party, or agents of either Party, are valid or binding unless contained herein. This Agreement may not be enlarged, modified, or altered except upon written agreement signed by the Parties hereto. CONSULTANT shall not subcontract, transfer, sell, or assign its rights (including the right to compensation) or duties arising hereunder without the prior written consent and express authorization of CITY. Any such subcontractor or assignee shall be bound by all of the terms and conditions of this Agreement as if named specifically herein.

SECTION 12: LICENSES AND ADHERENCE TO LAW REQUIRED

CONSULTANT represents that it possesses the skill and experience necessary and all licenses required to perform the services under this Agreement. CONSULTANT further agrees to comply with all applicable federal, state and local statutes and regulations in the performance of the services hereunder and such laws and regulations are hereby made a part of this Agreement and shall be adhered to at all times. Violation of any of these statutes and/or regulations by CONSULTANT shall be deemed material and shall subject CONSULTANT to termination of this Agreement for cause. No pleas of misunderstanding or ignorance on the part of CONSULTANT will, in any way, serve to modify the provisions of this requirement. CONSULTANT and its surety shall defend, hold harmless, and indemnify CITY and its employees, agents, and representatives, against any claim or liability arising from or based on the violation of any such laws, codes, ordinances, or regulations, whether by CONSULTANT, CONSULTANT's officers, agents, employees, or its subcontractors.

SECTION 13: NON-DISCRIMINATION

It is illegal under the U.S. Federal law to discriminate against an employee, either intentionally or through disparate impact, on account of race, color, gender, religion, sex (including pregnancy), national origin, physical or mental disability, age, marital or familial status, sexual orientation, and gender expression or identity. CONSULTANT shall not discriminate against any employee or applicant for employment. CONSULTANT's action under this Section shall include, but not be limited to, the following: employment, upgrading, demotion or transfer, recruitment or recruitment advertising, layoff or termination, rates of pay or other forms of compensation and selection for training, including apprenticeship. CONSULTANT agrees to post in conspicuous places, available to employees and other applicants for employment, notices setting forth the provisions of this Non-Discrimination Section.

SECTION 14: LEGAL FEES

In the event either Party incurs legal expenses to enforce the terms and conditions of this Agreement, the prevailing Party is entitled to recover attorney's fees and other costs and expenses, whether the same are incurred with or without suit.

SECTION 15: JURISDICTION, VENUE AND NON-WAIVER

It is agreed that this Agreement shall be construed under and governed by the laws of the State of Idaho. In the event of litigation concerning it, it is agreed that proper venue shall be the District Court of the Second Judicial District of the State of Idaho, in and for the County of Latah. Failure of either Party to exercise any of the rights under this Agreement, or breach thereof, shall not be deemed to be a waiver of such right or a waiver of any subsequent breach.

SECTION 16: BINDING OF SUCCESSORS

CITY and CONSULTANT each bind themselves, their partners, successors, assigns, and legal representatives to the other Parties to this Agreement and to the partner, successors, assigns and legal representatives of such other Parties with respect to all covenants of this Agreement.

SECTION 17: NOTICES AND COMMUNICATION

Any and all notices required to be given by either of the parties hereto, unless otherwise stated in this Agreement, shall be in writing and be deemed communicated when mailed in the United States mail, certified, return receipt requested, addressed as follows:

CONSULTANT	**CITY**
Welch Comer & Associates, Inc. 330 E. Lakeside Ave Suite 101 Coeur d'Alene, ID 83814 (208) 664-9382	City of Moscow, Idaho Deputy City Supervisor 206 East Third Street P O Box 9203 Moscow, ID 83843 (208) 883-7027

Either Party may change their address for the purpose of this paragraph by giving written notice of such change to the other in the manner herein provided.

CITY shall designate a representative authorized to act on behalf of CITY. The authorized representative shall examine the documents of the work as necessary, and shall render decisions related thereto in a timely manner so as to avoid unreasonable delays.

SECTION 18: NON-APPROPRIATION

This Agreement is contingent upon CITY receiving the necessary funding to fulfill the obligations of CITY. While the CITY shall exercise good faith, in the event that such funding is not received or appropriated, then, and in that event, CITY's obligations under this Agreement shall cease and each Party shall be released from further performance under this Agreement without any liability to the other Party.

SECTION 19: APPROVAL REQUIRED AND SEVERABILITY

This Agreement shall not become effective or binding until approved by the City of Moscow. If any part of this Agreement is held to be invalid or unenforceable, such holding will not affect the validity or enforceability of any other parts of this Agreement as long as the remainder of the Agreement is reasonably capable of completion.

SECTION 20: EXECUTION

IN WITNESS WHEREOF, said CONSULTANT and CITY have caused this Agreement to be executed on the day and year first above written.

CONSULTANT	**CITY**
Welch Comer & Associates, Inc.	City of Moscow, Idaho
_____	_____
Matt Gillis, Vice President	Arthur D. Bettge, Mayor
	ATTEST:
	_____
	Laurie M. Hopkins, City Clerk

DATED this ____ day of _____, 2022.

DRAFT

ACKNOWLEDGMENT

STATE OF _____)
) ss:
County of _____)

On this _____ day of _____, 2022, before me, a Notary Public in and for said State, appeared Matt Gillis, known to me to be the person named above and acknowledged that he executed the foregoing as the duly authorized representative of Welch-Comer.

_____
Notary Public for the State of _____
Residing at _____
My commission expires _____

DRAFT

Attachment A
Scope of Work
Moscow Downtown Streetscape - Phase 1
Existing Condition Evaluation & Concept Design

Background Data

CITY: City of Moscow

CONSULTANT: Welch Comer & Associates, Inc.

Specific Project Data

PROJECT TITLE: Moscow Downtown Streetscape – Phase 1

DESCRIPTION: CITY desires to conduct existing inventory, public outreach, concept design and preliminary design in Downtown, which primarily involves Main Street, between A Street and 8th Street and all side streets that extend one block east and west of Main Street (hereinafter Project). Initial project limits are depicted in the figure below.

Figure 1 - Initial Project Limits

1. Review of Applicable Planning Documents

1.1. DOCUMENT REVIEW: This task shall include a review of past studies, revitalization plans, and other relevant historical documents and policy guidance applicable to Downtown Moscow. It is assumed the CITY will provide the CONSULTANT all available & applicable studies.

2. General Administration

2.1. TEAM MEETINGS: CONSULTANT will meet with the CITY at appropriate intervals, but not less often than once every two (2) weeks. For the purposes of this scope of work, a total of six (6) meetings are anticipated. Meetings may either be in-person or via videoconference.

2.2. CITY COUNCIL MEETINGS: This scope of work assumes three (3) presentations will be given to the City Council. Those presentations may be after a public meeting and/or when a product is ready for input from the Council. Exact meeting times will be determined at a later date.

2.3. IDAHO TRANSPORTATION DEPARTMENT COORDINATION: It is assumed the CITY will conduct any necessary coordination with ITD District 2.

3. Preliminary Survey and Inventory of Existing Conditions

3.1. SURVEY: This task shall include a partial field survey to determine the location and dimensions of *some* existing conditions. This includes the existing right-of-way based on available assessor information, the general face of buildings, and existing curb alignments and grades. The location of all other existing information will be gathered via either aerial imagery, record drawings, or GIS information. The minimal survey work shall be of adequate detail to perform preliminary design tasks to a level sufficient for budgetary cost estimates and public viewing. The remaining survey information will be gathered during a subsequent phase.

3.2. AERIAL IMAGERY: In addition to survey, aerial imagery will be collected on Main Street and all side streets within the project limits.

3.3. This task shall culminate with completion of a base map partially detailing current conditions, deficiencies, needs, and opportunities. Deficiencies and needs will be determined in collaboration with CITY staff.

4. Public Outreach

4.1. STEERING COMMITTEE FORMATION & FACILITATION: Assist the CITY in assembling a Steering Committee (aka Advisory Committee) to meet with the CONSULTANT team of engineers, planners, landscape architects, and public involvement specialists to:

a) Attend and help facilitate a project walk-thru with the committee.

b) Establish a *Mission* and associated Project *Goals* to achieve that Mission.

c) Provide direction to the CONSULTANT team.

d) Consider and review information received from the public and stakeholders.

e) Advise and make recommendations to the Moscow City Council.

f) It is anticipated that three (3) meetings will be held with the Steering Committee during Phase 1.

4.2. STAKEHOLDER INTERVIEWS & MEETINGS: Stakeholders will be identified by the CITY and may include residents, business and property owners, developers, community organizations, and others. The CONSULTANT will meet with up to twelve (12) stakeholders on one occasion. Interviews may be in person, over the telephone, or via videoconference. It is assumed one (1) hour plus preparation time will be required for each meeting. Multiple meetings will be scheduled per day where possible. Findings from those stakeholder meetings will be summarized in the Concept Report.

4.3. PUBLIC MEETINGS: Two (2) public meetings will be held during Phase 1.

a) Public Meeting #1: Early in the Concept phase, the CONSULTANT will facilitate an open-house style Public Informational Meeting. The intent of the meeting will be to introduce the project and provide project elements for the public to consider. Attendees will be encouraged to rank specific elements and describe what is important to them. A meeting early in the process will help avoid controversy later, garner public trust, and give the public an active role in shaping the project's direction. In addition to educating the public, the public may be able to educate the CONSULTANT about unknown issues such as: abandoned irrigation ditches, wetlands, sewer drainfields, wells that encroach the Right of Way, historic structures, utilities, or other areas of special concerns. During the Public Meeting, the CONSULTANT will serve the CITY by providing the following:

- Meeting Advertisement: Provide a public news release and newspaper advertisement to advertise the meeting in the CITY's newspaper of record.
- Adjacent Property & Stakeholder Invitation: Provide a specific letter or newsletter to the CITY to be sent to each property owner and/or business owner along the project, introducing the project and inviting them to attend to provide comments at the public meeting.
- Sign-in Sheets: Provide sign-in sheets to record meeting attendees.
- Public Comments: Provide opportunity for public written and verbal comments.
- Meeting Facilitation: Prepare for and facilitate the meeting by presenting, hearing public concern, explaining the project, funding & schedule, and providing available information.

- Comment Review: Subsequent to the meeting, the CONSULTANT will meet with the CITY to review and discuss the written and verbal comments received during the meeting and address any changes required to the project. Comments will also be provided to the Steering Committee.

b) Public Meeting #2: A second public meeting will be held midway through the concept design process to inform of current progress and solicit further feedback from the public. Meeting invitations, sign-in sheets, public comments, and facilitation will be provided similar to what was provided for Public Meeting #1.

4.4. DOWNTOWN EVENT DEFICIENCIES: Conduct interviews with CITY staff, Downtown business owners, and other key stakeholders to identify the challenges associated with the various uses and events conducted in the area. The CONSULTANT shall present inventory results to staff and a city-sponsored advisory committee.

4.5. SOCIAL MEDIA OUTREACH: CONSULTANT will provide to the CITY content and graphics on all facets of the public outreach process, including updates associated with items 4.1, 4.2, 4.3, and 4.4, as outlined above. The CITY will post provided information to their preferred/approved social media platforms.

4.6. PUBLIC INVOLVEMENT SPECIALIST: At this point, Public Involvement for this project is expected to be standard. No major controversy or opposition is expected. In event the public involvement process encounters special challenges, the CONSULTANT will provide an experienced Public Involvement specialist (BDS Planning) to help navigate the issues. Cost for this service will be on a separate *hourly* as-needed basis.

5. Development of design concepts

5.1. CONCEPT DEVELOPMENT: Based on the inventory and outreach previously completed, this task shall include development of conceptual streetscape designs including roadway and sidewalk improvements, materials, fixtures, and furnishings to a level appropriate to estimate construction costs and project phasing. Where appropriate, CONSULTANT will provide multiple options of specific project elements for consideration.

5.2. RENDERINGS: Conceptual design renderings and exhibits shall be prepared for public outreach in both hard-copy and digital format. CONSULTANT will conduct engagement workshops and open houses to gather public input on the conceptual designs.

5.3. DESIGN PRESENTATIONS: CONSULTANT shall present the conceptual designs and a summary of public outreach to the Steering Committee and staff.

6. Develop preferred design alternative

6.1. FINAL CONCEPT DESIGN: This task shall include development of a preferred design alternative. Design renderings and exhibits of the preferred alternative shall be prepared for public outreach in both hard-copy and digital format. CONSULTANT shall present the preferred alternative to the Steering Committee and staff. This presentation shall inform further refinement of the alternative.

6.2. PHASING PLAN & COST ESTIMATE: Verify constructability and the anticipated construction approach and duration. A recommended phasing plan to minimize disruption to Downtown businesses, along with a detailed cost estimate for the entire project, and each proposed phase shall be provided. The CITY shall provide the CONSULTANT with an available construction funding amount.

7. Preliminary Construction Drawings

7.1. CONSTRUCTION DRAWINGS: Depending on the eventual project limits, available funding, and what is needed to achieve an accurate budgetary construction estimate, the CONSULTANT will produce preliminary construction drawings to a level that may range between 30% - 60%.

7.2. DESIGN PRESENTATION: CONSULTANT shall present the final preferred alternative and cost estimate to City Council.

7.3. DELIVERABLE: After presenting to City Council, the CONSULTANT shall provide the CITY with exhibits of the Preliminary Construction Drawings and Cost Estimate in both hard-copy and digital format for distribution.

ATTACHMENT B

Compensation for Services

1. Payments to Engineer for Services

1.1. For Basic Services having a Determined Scope – Lump Sum Method of Payment. CITY shall pay ENGINEER for the services identified herein, the following Lump Sum amount:

Moscow Downtown Streetscape – Phase 1: $161,000

1.2. The Lump Sum includes appropriate amounts of labor, overhead, profit, Reimbursable Expenses, and Subconsultant charges.

Task	Task Compensation
Task 1-Prelimimary Survey	$9,300
Task 2-Interal Team Coordination	$5,700
Task 3-Team and City Council Meetings	$28,000
Task 4-Steering Committee & Public Outreach	$54,000
Task 5-Concept Design	$64,000
Total Not to Exceed Cost	**$161,000**

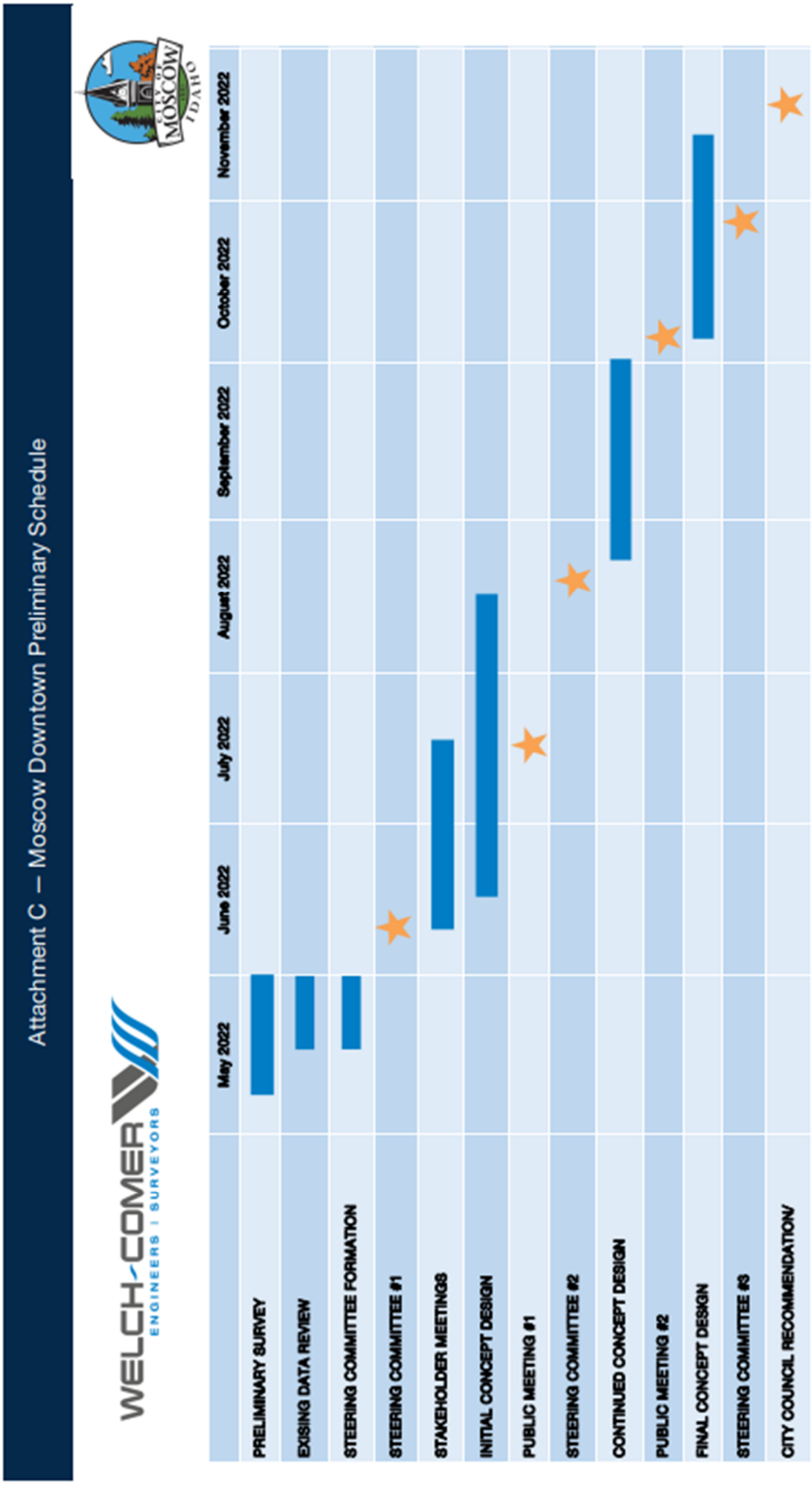
Attachment C – Moscow Downtown Preliminary Schedule
WELCH-COMER
ENGINEERS | SURVEYORS
CITY OF MOSCOW IDAHO
May 2022
June 2022
July 2022
August 2022
September 2022
October 2022
November 2022
PRELIMINARY SURVEY
EXISING DATA REVIEW
STEERING COMMITTEE FORMATION
STEERING COMMITTEE #1
STAKEHOLDER MEETINGS
INITIAL CONCEPT DESIGN
PUBLIC MEETING #1
STEERING COMMITTEE #2
CONTINUED CONCEPT DESIGN
PUBLIC MEETING #2
FINAL CONCEPT DESIGN
STEERING COMMITTEE #3
CITY COUNCIL RECOMMENDATION/

ADVERTISEMENT

CITY OF MOSCOW
DOWNTOWN STREETSCAPE DESIGN PROJECT
REQUEST FOR QUALIFICATIONS

The City of Moscow is seeking an experienced consulting firm to provide design and engineering services for the Downtown Streetscape Design Project (hereinafter Project). Services requested include landscape architecture, engineering design, and cost estimation for the construction of downtown streetscape improvements. The Project comprises an area of approximately 40 acres in the downtown core of the City. The Project is proposed to be completed in two phases with Phase I including the assessment of existing conditions, conceptual design, design development, and cost estimation. Phase II would include construction design, project bid, and construction administration. Each phase would be conducted separately and advancement to Phase II subject to City Council approval and available construction funding. The consultant would be expected to work closely with City staff, stakeholders, and elected officials during all phases of the project.

The Request for Qualifications summary, including description of the submittal and review process, is available upon request by contacting Jennifer Fleischman at (208) 883-7035, jfleischman@ci.moscow.id.us or by mail to:

City of Moscow
Attn: Jennifer Fleischman
P. O. Box 9203
Moscow, ID 83843

All submitted Statement of Qualification's (SOQ) will be reviewed and rated by the City's Selection Committee. A maximum of three (3) firms may be identified for personal interviews and presentations, which will allow the Selection Committee to become familiar with each firm's qualifications, background, and experience in the preparation of similar plans. Proposals must be received by the City by 5:00 PM, Friday February 4, 2022. Proposals may be sent to Jennifer Fleischman to the address noted above or delivered in person to the Community Development Department at 504 S. Washington Street, Moscow, Idaho.

Any questions regarding this request should be directed to Cody Riddle, Deputy City Supervisor of Community Development at 208-883-7027 or criddle@ci.moscow.id.us.

Publish January 1st and 8th, 2022

REQUEST FOR QUALIFICATIONS FOR

DOWNTOWN STREETSCAPE DESIGN

CITY OF MOSCOW, IDAHO

Project Name:	Downtown Streetscape Design Project
Contracting Agent:	City of Moscow, Community Development
Address:	504 S. Washington Street Moscow ID 83843
Telephone:	(208) 883-7027
Date Due:	5:00 PM PST, February 4, 2022
Project Manager:	Cody Riddle, Deputy City Supervisor

REQUEST FOR QUALIFICATIONS FOR THE DOWNTOWN STREETSCAPE DESIGN PROJECT

A. PROJECT NAME

Downtown Streetscape Design Project

B. PROJECT DESCRIPTION

The City of Moscow is soliciting and accepting a Statement of Qualification from interested and qualified firms for providing engineering and architectural services for the Downtown Streetscape Design Project (hereinafter Project). Consulting services requested include landscape architecture, engineering design, and cost estimation for the construction of downtown streetscape improvements. The current streetscape features located within Downtown Moscow were constructed in 1981 and are in deteriorating condition with need for repair. Downtown Moscow is the community's civic center and hosts a wide range of events including the Moscow Farmer's Market, various parades, block parties and other community events. The project area is comprised of approximately 40 acres which includes the downtown core of the City.

C. PROPOSED SUMMARY SCOPE OF WORK AND PHASING

The Project is proposed to be completed in two phases with Phase I including the assessment of existing conditions, conceptual design and design development, and cost estimation. Phase II will include construction design, project bid and construction administration. Each phase will be conducted separately and advancement to Phase II is subject to City Council approval and available construction funding. The consultant will be expected to work closely with the City staff, stakeholders, and elected officials during all phases of the project.

PHASE I

Understand & Evaluate Existing Conditions:

1. Review past studies, revitalization plans, recommendations and other relevant historical documents pertaining to Downtown Moscow.
2. Conduct a detailed field survey to determine exact right-of-way, street dimensions, surface grades, and existing utilities and features within the area generally shown in Exhibit A (Study Area).
3. Inventory existing hardscape, street trees, and furnishings to document the current conditions.
4. Research the condition and age of existing public utilities (water, sewer, storm and franchise) to determine reasonable remaining useful life.
5. Assess the current lighting, special event, and ancillary electricity distribution system wiring and components to identify required improvements.
6. Interview City staff, Downtown business owners and key stakeholders to identify the unique opportunities and challenges associated with the various uses and events conducted within the area.
7. Assess needs of Downtown community events (such as the Moscow Farmer's Market, block parties and similar activities) and their demand upon the infrastructure.
8. Prepare a map of the study area detailing current system conditions, deficiencies, needs and opportunities.

Conceptual Design:

1. Develop conceptual streetscape designs including proposed roadway and sidewalk improvements, materials, fixtures and furnishings.
2. Prepare conceptual design renderings and exhibits to be utilized for public input events.
3. Conduct engagement workshops and open houses to gather public input and comment on the conceptual designs.
4. Develop a preferred alternative to be advanced to the Design Development Phase including a planning level cost estimate.
5. Present the preferred alternative to City Council for approval prior to advancing to Design Development.

Design Development and Cost Estimation:

1. Prepare 60% design drawings to verify project constructability, cost, and the anticipated construction approach and duration.
2. Prepare a recommended phasing plan to reduce disruption to Downtown businesses while maintaining construction efficiency.
3. Prepare a detailed cost estimate for the entire project, and by phase.
4. Present the proposed design and cost estimate to City Council.

PHASE II

Construction Drawing Design and Project Bid:

1. Prepare the final construction design and specifications.
2. Prepare bid documents and advertisements.
3. Coordinate bid process, respond to questions and issue bid addendum.
4. Participate in bid opening and tabulation.

Construction Administration:

1. Assist with the preparation of construction contracts.
2. Participate in pre-construction meetings and activities.
3. Provide construction management and inspection services.
4. Provide community outreach prior to and during construction to clearly communicate construction activities, coordinate business access during construction, and respond to inquiries and concerns during the course of construction.
5. Prepare final closeout documents, project certification, tax and lien releases, and record drawings.

D. ESTIMATED PROJECT SCHEDULE

January 1 – February 4th	RFQ Advertisement Period
February 23rd	RFQ Interviews
March 21st	City Council Selected Respondent
April-May	Historical Document Review, Community Interviews, Field Survey
June-July	Conceptual Design Development
August	Preferred Alternate Selection

August- September	Construction Design Development
October	60% Design, Cost Estimate and Phasing Plan Development
November	Final Plan Presentation

E. EVALUATION OF SUBMITTALS

The City Selection Committee will review the Statement of Qualification's received in response to this request and select the firms to advance to the interview stage. The selected firms will be invited to attend personal interviews and presentations which will allow the Selection Committee to become familiar with each firm's qualifications, background, and experience in the preparation of similar plans. Following completion of the interview and evaluation process, the Committee will recommend a firm to the Moscow City Council for selection of the project.

F. CRITERIA FOR SELECTION

Firms must address each of the following criteria. Each firm may be awarded points up to the maximum points allowed, as listed below:

1. **Relevant specialized planning and project design experience of the firm or consultant (Maximum points allowed: 30)**. Respondents should include a list and description of projects of a similar nature with project reference contact information including name, address and phone number. Specialized experience with similar sized communities and streetscape projects should be highlighted.
2. **Professional qualifications and relevant experience of proposed project team (Maximum points allowed: 30)**. Respondents should describe the project team's professional qualifications and relevant work experience. Firms should include resumes of the proposed project manager and other personnel, and subcontractors that will be assigned to this project.
3. **Understanding and approach to the project (Maximum points allowed: 20)**. Familiarity with community, community needs and a clear understanding of the functional and operational aspects of the project and how these aspects may affect the project.
4. **Ability to complete the project within the specified project schedule (Maximum points allowed: 20)**. Respondents should describe their proposed project approach, schedule and available resources to complete the project on schedule.

SUBTOTAL MAXIMUM POINTS ALLOWED FOR PLANNING & DESIGN SERVICES: 100

G. SUBMITTAL REQUIREMENTS

1. Submittal Documents: Statement of Qualifications shall not exceed fifteen (15) pages including photos, biographies, appendices and any other supporting documentation. A single page includes text and/or graphics appearing on a single side of paper. Responses exceeding the maximum number of designated pages may be disqualified from City review. All responders will provide one complete (hard copy) submittal and a digital copy on a USB flash drive for review. The envelope in which the submittals are delivered must be clearly labeled on the outside with the Respondent's name and the project identification, "City of Moscow Downtown Streetscape Design Project." Late submittals will not be accepted.

Submittals shall be delivered to the following address before 5:00 PM PST, February 4, 2022:

City of Moscow
RE: City of Moscow Downtown Streetscape Plan Project
Attn: Jennifer Fleischman, Deputy City Clerk
504 S. Washington Street
Moscow, ID 83843

2. Submittal Content: Each submittal shall be organized in the following order:
    a. Outside Cover and First Page: Shall contain (i) the title, "City of Moscow Downtown Streetscape Design Project", (ii) the name of the Respondent, and (iii) the submittal date.
    b. Table of Contents: Include a table of contents.
    c. Transmittal Letter: Include a short transmittal letter. The transmittal letter shall:
        i. Summarize why the Respondent believes itself to be the most qualified;
        ii. Contain the statement that to the best of the Respondent's abilities, all information contained in the RFQ submittal is complete and accurate;
        iii. Contain a statement granting the City and its representatives' authorization to contact any previous client of the Respondent (or a Respondent's team member or associates) for the purposes of ascertaining an independent evaluation of the Respondent or a Respondent's team member's or associate's performance; and
        iv. At least one copy of the transmittal letter must have the original signature of an officer of the principal responding firm.
    d. Section I: Description of the Respondent:
        i. Firm Description: Include a complete narrative description of the Respondent's firm (or firms if the Respondent is comprised of a team of firms). Information should include:
            - The Respondent's areas of specialization;
            - Firm history;
            - Honors and awards;
            - Location of home and branch offices;
            - Names of the principal officers of the firm;
            - Identification of the major consultants, if known.
        ii. Organizational Chart: Include a simple organizational chart showing how the Respondent, if selected, would organize its personnel for the project.
        iii. Key Professionals: Identify the key members of the Respondent's team that would be involved in the project and describe their area of expertise and what role they will perform in the team. Indicate their availability for this project schedule.
        iv. Resumes: Provide resumes of any person identified as a key professional. The resumes should contain the following:
            - Name;
            - Education and background;
            - Employment history;
            - Proposed role in the project;
            - An identification of the other relevant projects in which the person has been involved and a name/phone number of a representative of any project cited that can be contacted for a reference;
            - Other information you believe to be relevant.

e. Section II: Narrative: Set forth the criteria on which the selection will be made. Your proposal should be organized to clearly address:
    i. Relevant specialized planning, and project design experience of the firm or consultant;
    ii. Professional qualifications and relevant experience of proposed project team;
    iii. Understanding and approach to the project including familiarity with the community and a clear understanding of the functional and operational aspects of the project and how these may affect project planning, design and future construction;
    iv. Ability to complete the project within the specified schedule.

f. Section III: Relevant Experience of Respondent:
    i. Summary of Relevant Projects Completed: List at least three (3) relevant projects. A relevant project is one which best exemplifies the Respondent's qualifications for this project. Provide all applicable information as indicated below:
    - Name of project;
    - Project location;
    - Total project cost;
    - Project description;
    - Describe the services which the Respondent's firm provided;
    - Indicate which team members were actually involved in the project and specify their role;
    - Provide Project reference contacts including contact name, association to project, address and phone number.

H. ADDITIONAL INSTRUCTIONS, NOTIFICATIONS AND INFORMATION

1. A complete package of this RFQ including any attachments can be obtained from the City of Moscow by contacting Jennifer Fleischman via phone at (208) 883-7035 or by email at jfleischman@ci.moscow.id.us.

2. The City reserves the sole right to (1) evaluate the qualifications submitted; (2) waive irregularities therein; (3) reject any or all Respondents submitting qualifications, should it be deemed in the City's best interest to do so.

3. An RFQ pre-submittal conference will not be held. The City of Moscow welcomes questions regarding this submission on or before the submission deadline to Cody Riddle, Deputy City Supervisor via email at criddle@ci.moscow.id.us.
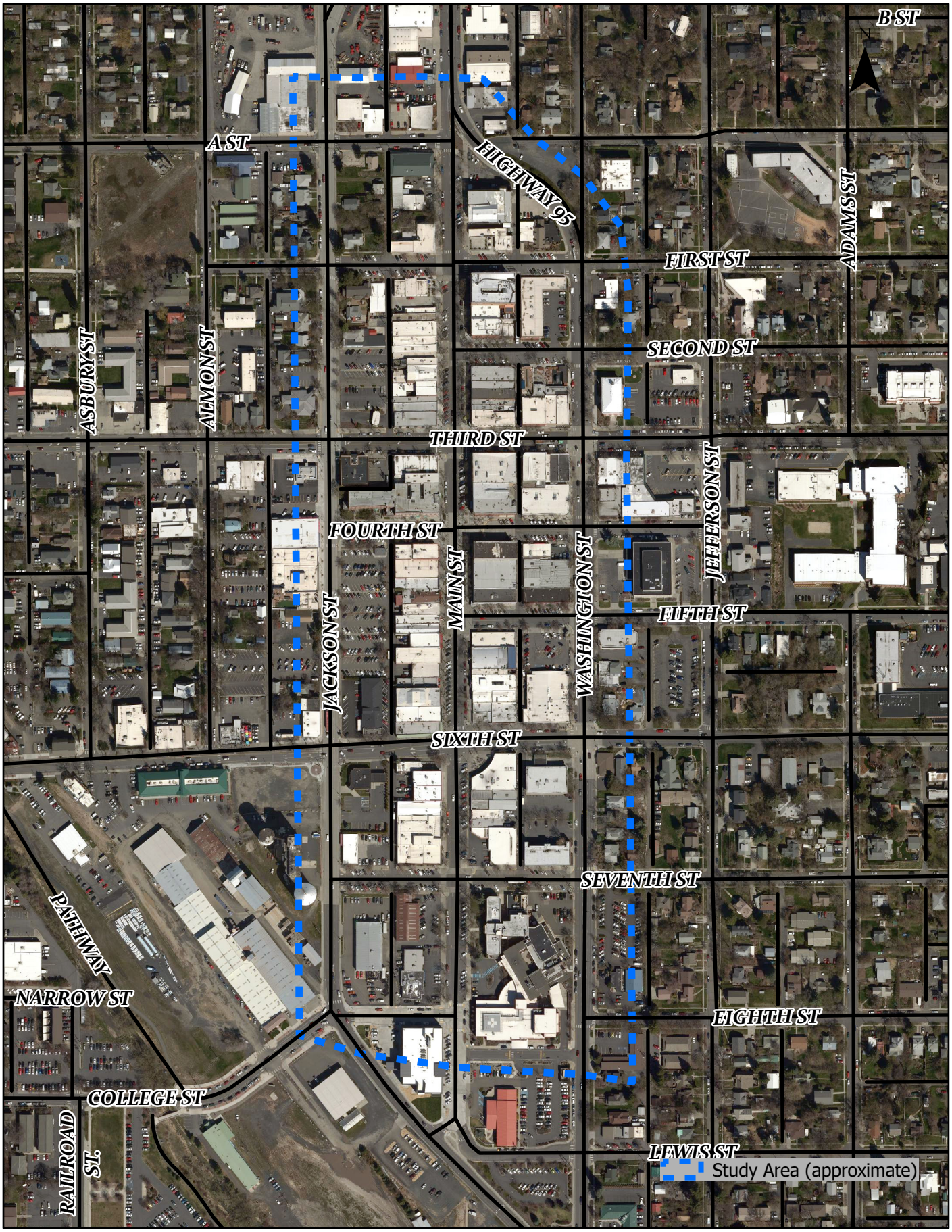
Exhibit A: Study Area (Approximate)