BOARD of ADJUSTMENT

Joe Bazzoli
Board Chair
BOA@ci.moscow.id.us

Public Hearing
~ Agenda~

Aimee Hennrich
Staff Liaison
208.883.7095

https://www.ci.moscow.id.us/581/Agendas-and-Minutes

Thursday **June 2, 2022**	**7:00 PM**	**Council Chambers** **206 E Third Street**

WELCOME AND ATTENDANCE

REGULAR AGENDA

1. **Approval of May 2, 2022 Minutes (ACTION ITEM)**
   PROPOSED ACTIONS: Approve minutes as presented; approve minutes with amendments; or provide staff further direction.

2. **Public Hearing: Proposal for a Conditional Use Permit Self-Storage Facility generally located in the 2300 block of South Highway 95 - LUP2022-0012 [ACTION ITEM]**
   Conditional Use Permit application for a Self-Storage Facility generally located in the 2300 block of South Highway 95 within the Motor Business (MB) Zoning District in the Area of City Impact per Moscow City Code 4-3-4.
   PROPOSED ACTIONS: Conduct the public hearing upon the proposed conditional use permit request and upon consideration of any testimony presented, recommend that the City of Moscow Board of Adjustment put forth a recommendation for approval to the Latah County Zoning Commission and direct Staff to prepare a reasoned statement of relevant criteria and standards; or recommend approval of with conditions and direct Staff to prepare a reasoned statement of relevant criteria and standards; or recommend denial the conditional use permit request and direct Staff to prepare a reasoned statement of relevant criteria and standards; or take other action as deemed appropriate.

3. **Public Hearing: Proposal for the Amendment to the Conditional Use Permit at the Latah County Fairgrounds located at 1021 Harold Street - LUP2022-0010 [ACTION ITEM]**
   Amendment to the Conditional Use Permit at the Latah County Fairgrounds located at 1021 Harold Street to include seven additional (electricity only) Recreational Vehicle spaces within the Medium Density Residential (R-3) Zoning District per Moscow City Code 4-3-4.
   PROPOSED ACTIONS: Conduct the public hearing for the proposed Conditional Use Permit (CUP) request and upon consideration of any testimony received, approve the proposed CUP and direct Staff to prepare a reasoned statement of relevant criteria and standards; or approve the proposed CUP with conditions and direct Staff to prepare a reasoned statement of relevant criteria and standards; or deny the proposed CUP and direct Staff to prepare a reasoned statement of relevant criteria and standards; or take other action as deemed appropriate.

REPORTS

ANNOUNCEMENTS

UPCOMING EVENTS/MEETINGS

ADJOURN

NOTICE: Moscow City Council and Commission meetings can be televised, videotaped and/or recorded. Individuals attending the meeting who require special assistance to accommodate physical, hearing, or other impairments, please contact the City Clerk, at (208) 883-7015 or TDD 883-7019, as soon as possible so that arrangements may be made.

BOARD of ADJUSTMENT

Joe Bazzoli
Board Chair
BOA@ci.moscow.id.us

Public Meeting
~ Minutes~

Aimee Hennrich
Staff Liaison
208.883.7095

http://www.ci.moscow.id.us/354/Board-of-Adjustment

Monday **May 2, 2022**	**5:30 PM**	**Council Chambers** **206 E Third Street**

Comstock called the meeting to order at 5:30 PM

MEMBERS PRESENT: Marshall Comstock, Vice Chair; Steve Bush, Cole Mize, Tim Thomson
MEMBERS ABSENT: Joe Bazzoli, Annette Bieghler, Tim Kinkeade
STAFF: Jennifer Fleischman, Aimee Hennrich

REGULAR AGENDA

1. Approval of April 26, 2022 Minutes (ACTION ITEM)
Thomson moved for approval of the minutes as written, seconded by Mize. Vote by Acclamation; Ayes: Unanimous (4). Nays: None. Abstentions: None. Motion carried.

2. Approval of Reasoned Statement of Relevant Criteria and Standards (ACTION ITEM)
Conditional Use Permit application to allow a Bed and Breakfast Inn located at 980 Hirschi Road in the Moderate Density, Single Family Residential Zone (R-2) Zoning District per MCC 4-3-4.
Comstock requested that an additional relevant fact be added to the Reasoned Statement that there was no negative testimony from neighboring residents.

Bush moved for approval of the Relevant Criteria & Standards as changed, seconded by Thomson. Vote by Acclamation; Ayes: Unanimous (4). Nays: None. Abstentions: None. Motion carried.

REPORTS

ANNOUNCEMENTS

UPCOMING EVENTS/MEETINGS
Two hearings scheduled for June 2, 2022.

The meeting adjourned at 5:34 PM

_____ _____
Joe Bazzoli, Chair Date

DRAFT

COMMUNITY DEVELOPMENT DEPARTMENT
STAFF REPORT

HEARING DATE: Thursday, June 2, 2022.

GENERAL INFORMATION

Hearing Body: Board of Adjustment

Subject: Application for Conditional Use Permit for a proposed Self-Storage Facility generally located in the 2300 block of South Highway 95 within the Motor Business (MB) Zoning District, in the Moscow Area of City Impact.

Attachments:

1. Public Hearing Notice – published in the Moscow-Pullman Daily News on May 14, 2022.
2. Conditional Use Permit Application from William Felsted.
3. Site Plan
4. Memo from Todd Drage, Staff Engineer, Engineering Department

Prepared by: Aimee Hennrich, Planner I

STAFF REVIEW

Proposal: The applicant is proposing to construct a Self-Storage Facility generally located in the 2300 block of South Highway 95. The facility is proposed to be located on a 195,000 square foot (4.5 acre) portion of a 6.5-acre parcel, and would be developed in phases based upon market demand. The area will be paved, fenced, and accessible via a gate. The facility will contain seven (7) buildings of various sizes and each building will have between 250 and 300 storage units. The subject property is located within the Motor Business (MB) Zoning District in the Area of City Impact where Self-Storage Facilities are a conditional use, per the Area of City Impact Agreement.

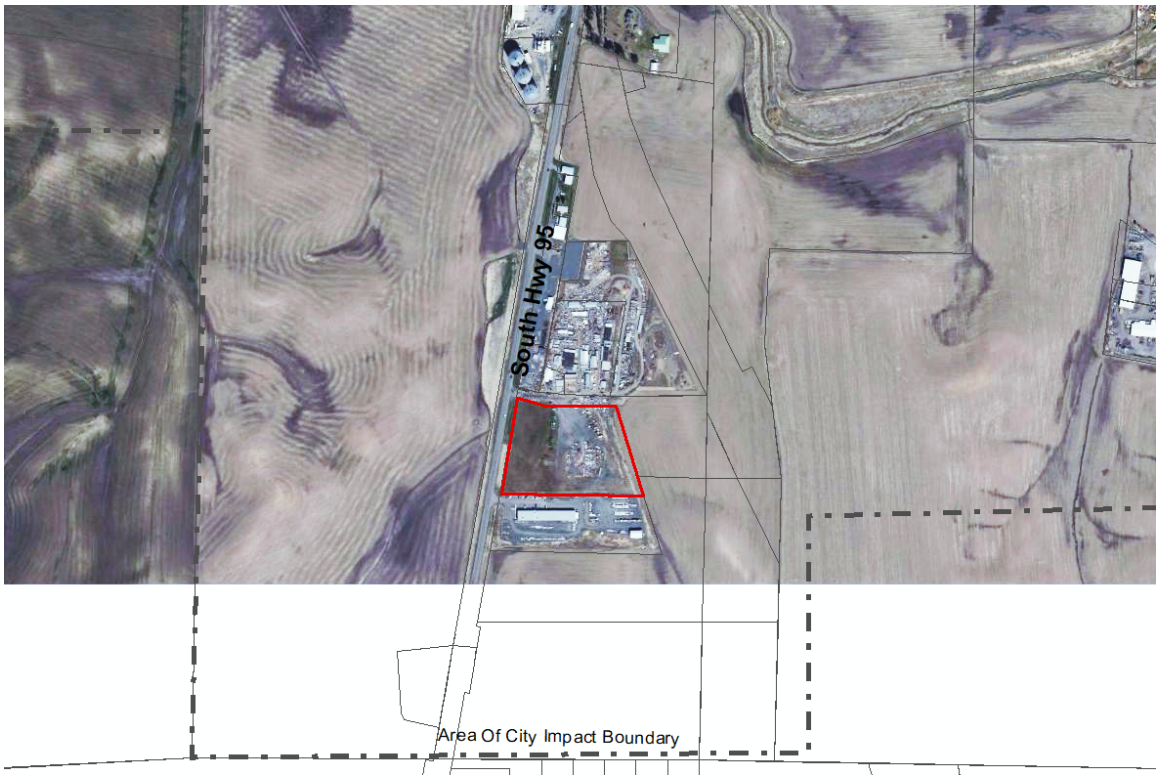

Vicinity Map

Site and Area Land Use: The subject property is a 6.5-acre parcel located just outside the City limits and generally located in the 2300 block of South Highway. The subject property is currently undeveloped. The property located to the north and east of the subject property is also vacant land. Early Bird Construction is located to the south and to the west of the subject property, across Highway 95, is a parcel owned by Schweitzer Engineering Laboratories. The portion of the property in which the applicant is proposing to develop is a 4.52-acre area at the eastern side of the parcel. The site has approximately 510 feet of frontage along Highway 95.

Aerial of Subject Property

Zoning: The subject property and adjacent properties to the south and west are currently zoned Motor Business (MB), The properties to the north and east are zoned a combination of Industrial (I) and Farm Ranch and Outdoor Ranch (FR). All surrounding properties are also located in Latah County within the Moscow Area of City Impact.

According to the Zoning Code, the purpose of the MB Zoning District is,

> *"intended to provide for the location and grouping of compatible uses having similar operation as they involve enterprises which depend primarily on the transient motor vehicle-based trade. By concentrating such uses the City intends to increase public convenience when utilizing such services and, within the regulation, to allow such activities to render the maximum service."*

Historically, Self-Storage Facilities have required a conditional use permit within the MB Zoning District within the City of Moscow. However, with the passage of Ordinance 2019-07 in July of 2019, Self-Storage Facility in Motor Business no longer require a Conditional Use Permit and are permitted by right within the City. When Ordinances are adopted by the City, in order for it to be valid within the Area of City Impact, Latah County would need to adopt that ordinance as well. Ordinance 2019-07 has not yet been adopted by Latah County, thus making it a conditionally permitted use.

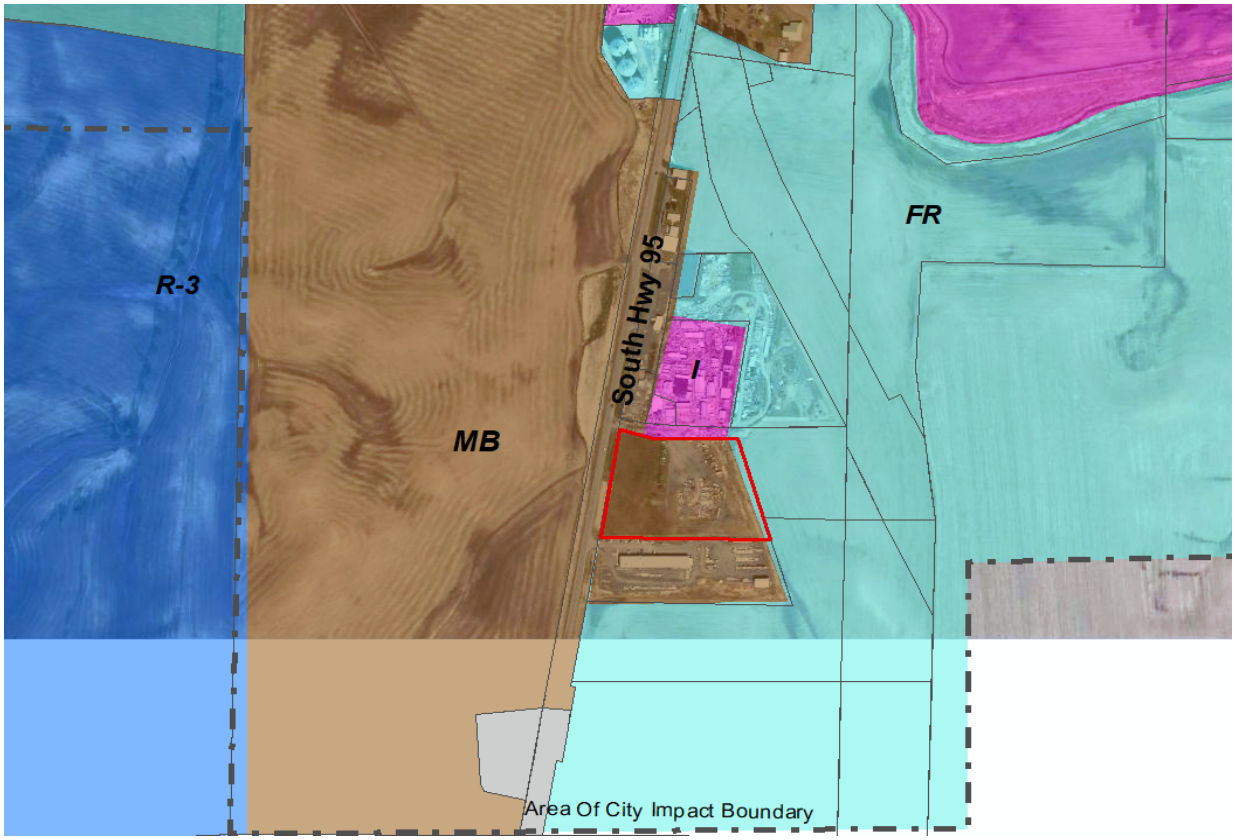

Zoning Map

Comprehensive Plan Within the 2019 Moscow Comprehensive Plan, which has been adopted within the Area of City Impact, the subject property is currently designated as Rural and Agricultural. According to the 2019 Comprehensive Plan, Rural and Agricultural designated areas are intended to,

> *"allow continued use for agricultural purposes with allowances for limited residential development at very low densities. Lands with this designation should be preserved for agricultural use and development should be directed to areas in closer proximity to the City where municipal utilities are available and land can be efficiently developed and serviced. Areas shown as Agriculture on the Future Land Use Plan are outside of the 10-year growth area (refer to Chapter 5, Public Utilities, Services, and Growth Capacity) and beyond the area for which the City is prepared to provide adequate facilities and services during the horizon of this Plan. Generally, these are found around the periphery of the City and throughout the Area of City Impact. The residential development options allow septic/well and septic/public water (where applicable and warranted) at very low densities, consistent with the intended agricultural character. Appropriate current zones for lands with this designation are Agriculture/ Forestry (AF) and Farm, Ranch, and Outdoor Recreation (FR)."*

Chapter 3 of the Comprehensive Plan, Community Mobility, identifies Highway 95 as National Highway.

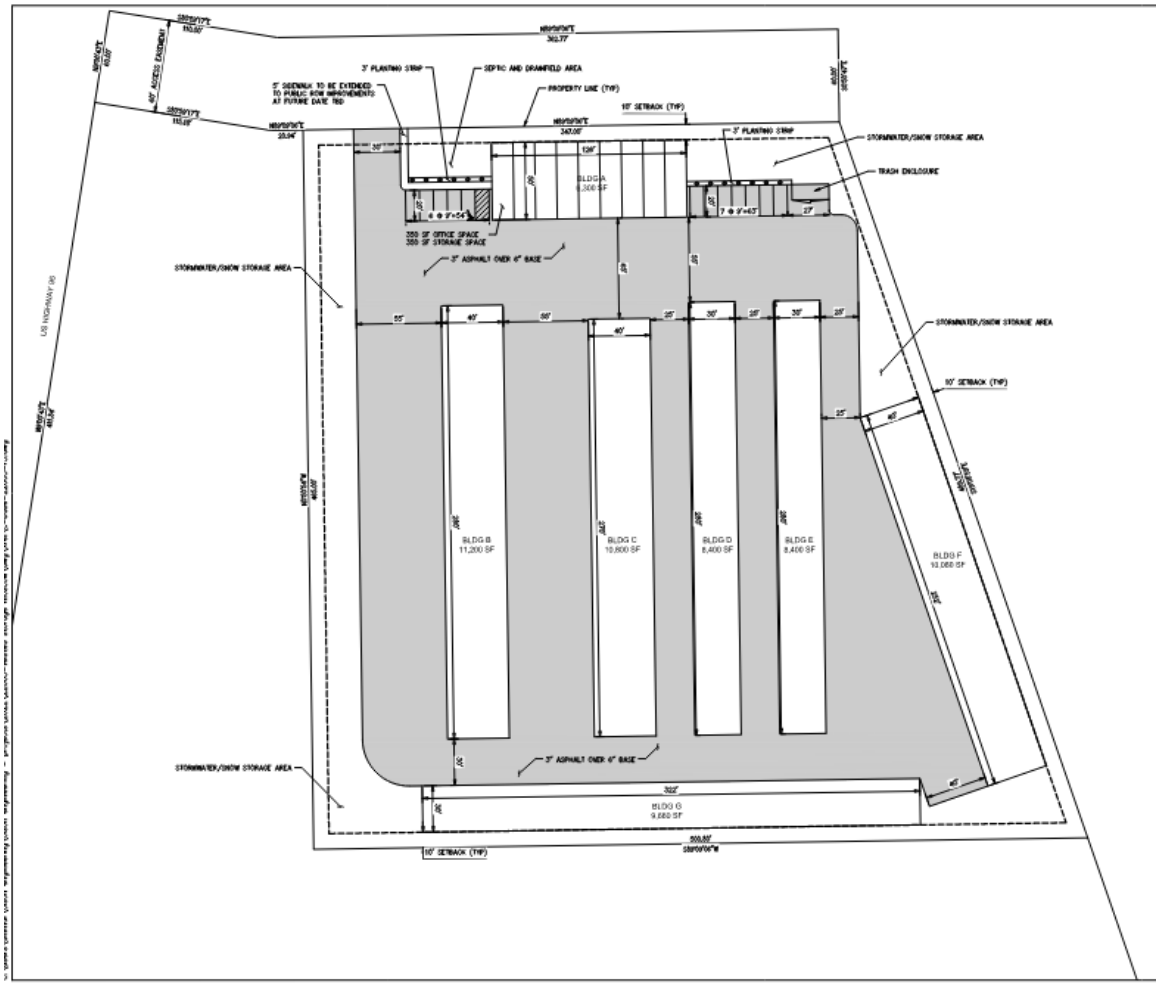

Proposed Site Plan

Proposed Development: The conceptual site plan shows seven proposed buildings ranging in size form 6,300 square feet to 11,200 square feet, built in phases. Phases would be developed based on market demand. The portion of the parcel, to the west. adjacent to Highway 95 will remain vacant and be reserved for future commercial development.

Streets, Access and Utilities: The subject property is accessed from Highway 95 via the adjacent parcel to the north. The applicant has provided a fully executed access agreement with the property owner to the north. The subject property has property frontage along Highway 95. Highway 95 is designated as a National Highway and is developed as a 24-foot-wide paved roadway with northbound and southbound travel lanes and minimal gravel shoulders on both sides.

Highway 95 is anticipated to become the jurisdiction of the City of Moscow with the completion of Idaho Transportation Department's Thorncreek Project. A new principal structure on an undeveloped property would normally require the construction of street frontage improvements per the City's Minor Arterial Standard.. The applicant is proposing

to develop the eastern portion of the property and leave the western portion that is adjacent to Highway 95 vacant to be developed at a later date. The City of Moscow Engineering Department recommends the completion of a Development Agreement stating that any additional development will require frontage improvements including curbing, sidewalk, and roadway widening in accordance with the City's Minor Arterial Standard. .

Input from Other Departments/Entities: No additional comments were received from other departments/agencies upon review of the request for the Conditional Use Permit.

RELEVANT CRITERIA AND STANDARDS

The following are Staff's comments relating to the criteria required for approval of a Conditional Use Permit. See the attached worksheet for each of the criteria. The following statements may be used for the Relevant Criteria and Standards or changed to include or remove any statement deemed necessary or appropriate by the Board.

1. The proposed use (is/is not) a conditionally permitted use within the Zoning District.

2. The character of the proposed use (will/will not) be in harmony with the neighborhood and surrounding land uses.

3. The proposed use as approved, or as approved with conditions, (will/will not) generate nuisances that would be injurious or detrimental to the adjoining properties or the neighborhood (including, but not limited to, noise, dust, glare, vibrations, odors, and the like).

4. The location, design, and size of the proposed use (will/will not) be adequately served by existing streets, public facilities and services.

5. The proposed use (will/will not) endanger the public health or safety if located where proposed?

6. Proposed use (meets/does not meet) all applicable development standards of the Zoning Code.

7. The propose use (will/will not) be in conflict with the Comprehensive Plan.

RECOMMENDATION

The Board has the option to approve, approve with conditions, or deny the application subject to the Relevant Criteria and Standards and any public testimony provided at the public hearing. The board may also table the decision for the application in order to request more information, including studies of social, economic, fiscal and environmental affects of the proposed Conditional Use Permit.

The Board of Adjustment may impose conditions including, but not limited to those 1) minimizing adverse impact on other development; 2) controlling the sequence and timing of development; 3) controlling the duration of development; 4) assuring that development is maintained properly; 5) designating the exact location and nature of development; 6) requiring the provision for on- or off-site public facilities or services; 7) requiring more restrictive standards than those generally required in an ordinance; and/or 8) requiring mitigation of effects of the proposed development upon service delivery by any political subdivision, including school districts, providing services within the planning jurisdiction.

Staff recommends that the City of Moscow Board of Adjustment put forth a recommendation of approval of the proposed conditional use permit for a Self-Storage Facility generally located in the 2300 block of South Highway 95 to the Latah County Zoning Commission with the following condition:

1. The applicant shall enter into a development agreement requiring that any additional development on the subject property will require frontage improvements including curbing, sidewalk, and roadway widening in accordance with the City's Minor Arterial Standard.

NOTICE OF PUBLIC HEARING

Proposal for a Conditional Use Permit of a 6.59-acre area generally located in the 2300 block of South Highway 95 within the Motor Business (MB) Zoning District in the Area of City Impact: LUP2022-0012

A public hearing at which you may be present and speak will be conducted by the Moscow Board of Adjustment at which time the following proposal will be discussed for land generally shown on the vicinity map below:

- Conditional Use Permit application for a proposed Self-Storage Facility generally located in the 2300 block of South Highway 95 within the Motor Business (MB) Zoning District in the Area of City Impact per Moscow City Code 4-3-4.

The subject property is within the Moscow Area of City Impact. The City of Moscow Board of Adjustment will make a recommendation to the Latah County Board of County Commissioners regarding this matter.

MEETING DATE: Thursday, June 2, 2022

HEARING LOCATION: Council Chambers, Second Floor, Moscow City Hall
206 East Third Street, Moscow, Idaho

MEETING TIME: 7:00 p.m.

Note: Meeting start time is not necessarily indicative of the start time for review of the application advertised in this notice. Multiple hearings and/or agenda items may make it difficult to determine start time for review of application advertised in this notice, which could occur late in the meeting.

The file containing information on this matter is available for public review (an appointment may be necessary) at the Community Development Department located in the Haddock Building, 504 South Washington Street, Moscow, Idaho. You may also call 883-7035 to get a meeting agenda, further information about the application, the public meeting process and/or to request a meeting with City Staff. Public participants desiring to submit textual materials (excluding petitions) to the decision-making board shall do so at least five (5) calendar working days in advance of the scheduled meeting to the Community Development Department. Additionally, you may obtain further information about the public hearing process and procedures on the City's Website at: http://id-moscow.civicplus.com/593/Public-Hearing-Notices

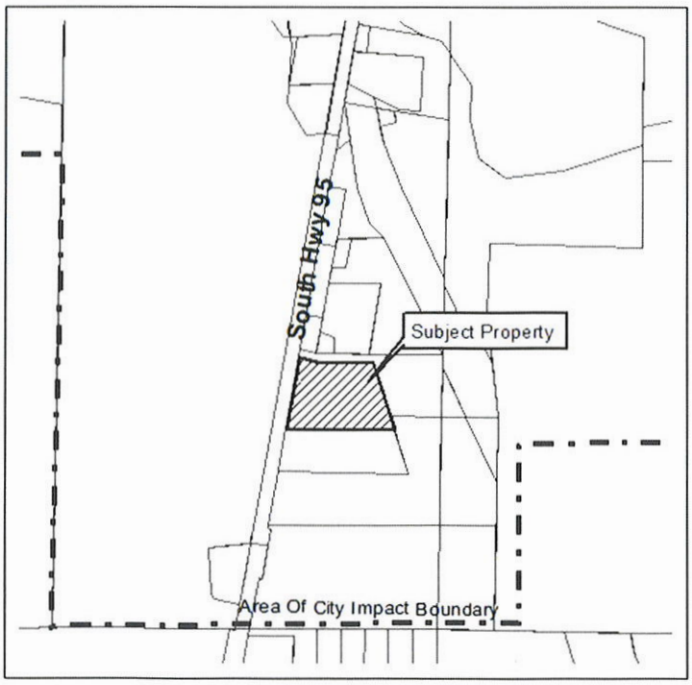

Laurie M. Hopkins, Moscow City Clerk

Jennifer Fleischman, Deputy Clerk

Publish: Saturday, May 14, 2022

LATAH COUNTY
PLANNING and BUILDING
Ph: 208-883-7220
Fax: 208-883-7225
pb@latah.id.us

CITY OF MOSCOW
COMMUNITY DEVELOPMENT
Ph: 208-883-7035
Fax: 208-883-7033
apeterson@ci.moscow.id.us

For Office Use Only			
	Date Received	3/25/22	
Dept	Fee Type	Fees	Paid
LC	Application Fee	$500	500.00
	Receipt Number		
	Forwarded to City		
CD	Hearing Date		

LUP2022-0012

RECEIVED
APR 12 2022
BY: .....

APPLICATION FOR CONDITIONAL USE PERMIT

(Please type or print plainly with blue ink.)

GENERAL INFORMATION

1. **Applicant**

Name: William Felstead Telephone: 509 998 9964
322 E. High Dr Spokane WA 99203
(home address)

Relationship to affected property (please check one):

Owner ☑ Purchaser ☐ Lessee ☐ Other ☐ (explain below)

2. **Owner of Affected Property** (if other than applicant)

Name: _____ Telephone: _____

_____
(mailing address)

3. **Location of Affected Property**: _____

Acres: 6.59 Legal Description: _____

If described by Metes and Bounds, please attach deed on a separate sheet.

4. **Proposal**: The applicant proposes the following use and/or construction for the above-described property:

Build min. storage on a portion of the property.

The proposed activities and use shall be shown on an attached site plan drawn to a standard engineer's or architect's scale. The site plan shall show, label and dimension all property lines and easements, existing and proposed buildings, parking lot and driveway(s), fencing and landscaping. A site topography map shall be provided when appropriate.

5. **Authorization**: Section 3-4 of the Moscow Area Of Impact Ordinance authorizes the proposed use, subject to a Conditional Use Permit.

Received 04-12-2022

6. **Operating Characteristics**: Detail the operating characteristics of the proposed use. In other words, provide specific information which describes and defines how the proposed use will be conducted and what will be involved in the day to day operations of the proposed use. Applicable information may include hours of operation, number of people (employees, customers, students, etc.) involved, traffic and/or delivery information, services provided, equipment or machinery which may be involved, or any other information which helps describe and define the proposed use and impacts which it may have.
the facility will accessable 24/7, fenced. there will be less than 5 employees, if at all.
I am proposing ~300 units

7. *Before the City of Moscow and Latah County may issue a Conditional Use Permit, they must first make findings of compliance with the following seven relevant criteria and standards. Please indicate in the spaces provided below what you believe to be justification showing compliance with each of the relevant criteria and standards.*

Criteria #1. THE PROPOSED USE IS A CONDITIONALLY PERMITTED USE WITHIN THE ZONING DISTRICT.
Justification and compliance with criteria #1: The land use table lists self-storage as a Conditionally permitted use.

Criteria #2. THE CHARACTER OF THE PROPOSED USE WILL BE IN HARMONY WITH THE NEIGHBORHOOD AND SURROUNDING LAND USES.
Justification and compliance with criteria #2: The surrounding uses are all Commercial/Industrial ~~To~~ Early Bird Supply is to the South and Wasenkari to the North

Criteria #3. THE PROPOSED USE AS APPROVED, OR AS APPROVED WITH CONDITIONS, WILL NOT GENERATE NUISANCES THAT WOULD BE INJURIOUS OR DETRIMENTAL TO ADJOINING PROPERTIES OR THE NEIGHBORHOOD (INCLUDING BUT NOT LIMITED TO NOISE, DUST, GLARE, VIBRATIONS, ODORS AND THE LIKE).
Justification and compliance with criteria #3: The proposed use will not generate nuisances that would be detrimental to the surrounding area.

Criteria #4. THE LOCATION, DESIGN, AND SIZE OF THE PROPOSED USE WILL BE ADEQUATELY SERVED BY EXISTING STREETS, PUBLIC FACILITIES AND SERVICES.
Justification and compliance with criteria #4: Proposing Hwy 95 as it currently exists as the access.

Received 04-12-2022

Criteria #5. THE PROPOSED USE WILL NOT ENDANGER THE PUBLIC HEALTH OR SAFETY IF LOCATED WHERE PROPOSED.
Justification and compliance with criteria #5: The proposed use will not endanger the public health or safety

Criteria #6. THE PROPOSED USE MEETS ALL APPLICABLE DEVELOPMENT STANDARDS OF THE ZONING CODE.
Justification and compliance with criteria #6: YES

Criteria #7. THE PROPOSED USE WILL NOT BE IN CONFLICT WITH THE COMPREHENSIVE PLAN.
Justification and compliance with criteria #7: The use will not be in conflict with the comp plan.

CONDITIONS OF APPROVAL

The City of Moscow or Latah County may impose conditions including, but not limited to, those (1) minimizing adverse impact on other development; (2) controlling the sequence and timing of development; (3) controlling the duration of development; (4) assuring that development is maintained properly; (5) designating the exact location and nature of development; (6) requiring the provision for onsite or offsite public facilities or services; (7) requiring more restrictive standards than those generally required in an ordinance; and/or (8) requiring mitigation of effects of the proposed development upon service delivery by any political subdivision, including school districts, providing services within the planning jurisdiction.

COMPLIANCE

1. In the event of failure to comply with the plans proof by the Board of Adjustment, or with any conditions imposed upon the Conditional Use Permit, the permit shall be immediately revoked and shall be automatically null and void.
2. Where plans are submitted and approved as part of the application for a Conditional Use Permit, modifications of the original plans may be required by the Board as a condition of approval.
3. Where plans approved by the Board of Adjustment are modified following such approval, such plan modifications must be submitted to and determined by City staff to be in substantial conformance with the plans approved by the Board. If plan modifications are not in substantial conformance, the plan modifications must be resubmitted to the Board for an additional public hearing as an amendment to the Conditional Use Permit application.

Received 04-12-2022

REVOCATIONS

If a Building Permit and/or Certificate of Occupancy pertaining to the Conditional Use Permit is not obtained for the subject property within one year from the date of the Board of Adjustment's final decision, the Conditional Use Permit shall be immediately revoked and shall be automatically null and void. If the use and/or occupancy for which the Conditional Use Permit is approved ceases for a period of twelve consecutive months, unless otherwise provided for in the Conditional Use Permit, then the Conditional Use Permit shall be immediately revoked and shall be automatically null and void.

Application Submittal:

This application must be completed and submitted with the below described items to the Moscow Community Development Director at least twenty-one days prior to the hearing at which the application is to be considered by the Board or the application will not be processed.

The following items must be submitted with this application before it will be processed:
1. Application Fee
2. Site Plan, drawn to scale
3. Floor Plans, drawn to scale
4. Elevation Drawings, drawn to scale (for new construction only)

I understand this information is a public record and may be posted to a public website.

William N Felstet — 8-31-21

Applicant's Signature — Date

Owner's Signature — Date

Received 04-12-2022

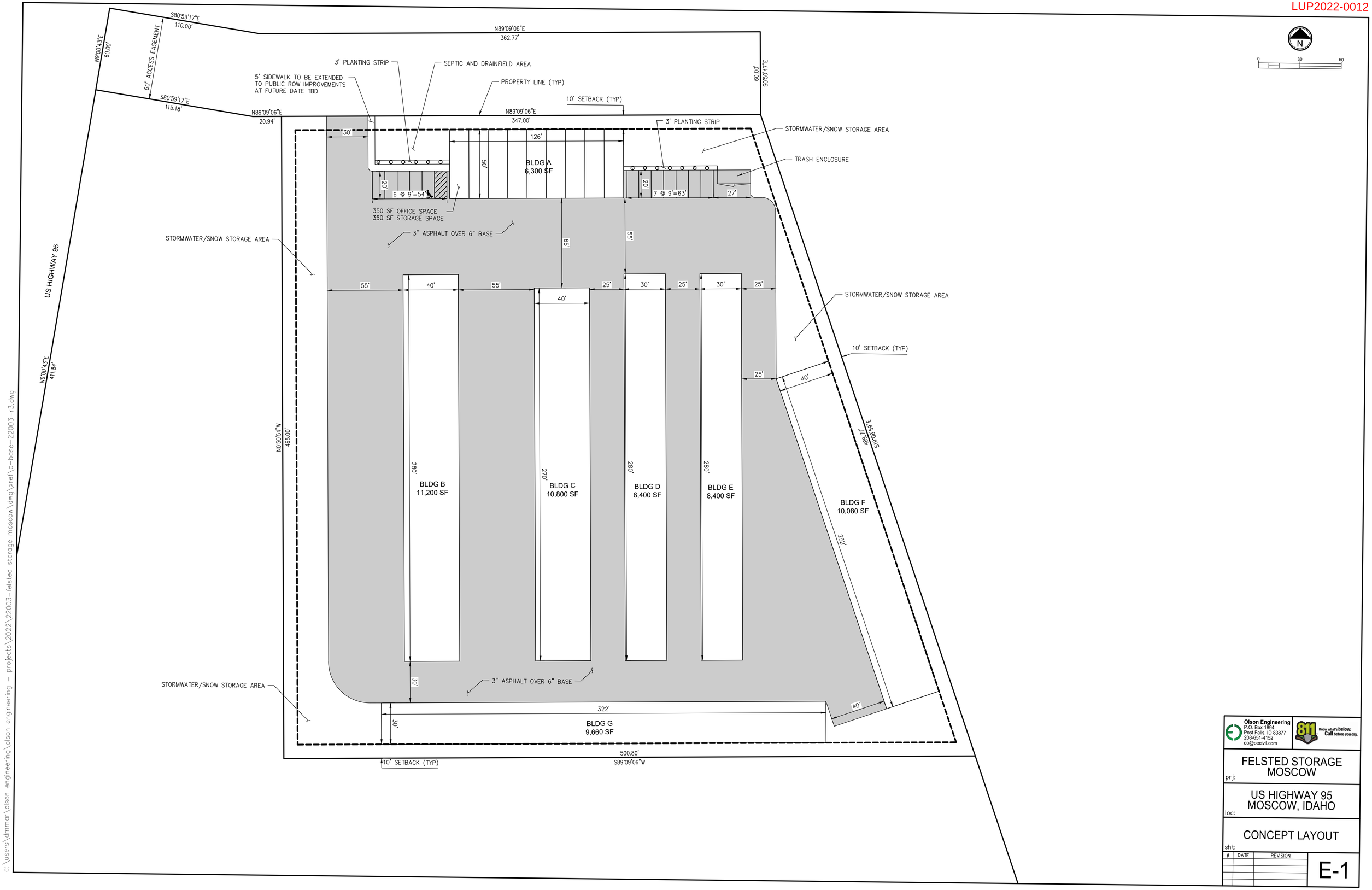

Olson Engineering
P.O. Box 1894
Post Falls, ID 83877
208-651-4152
eo@oecivil.com

811 Know what's below. Call before you dig.

prj: FELSTED STORAGE MOSCOW

loc: US HIGHWAY 95 MOSCOW, IDAHO

sht: CONCEPT LAYOUT

#	DATE	REVISION

E-1

c:\users\dmmar\olson engineering\olson engineering - projects\2022\22003-felsted storage moscow\dwg\xref\c-base-22003-r3.dwg

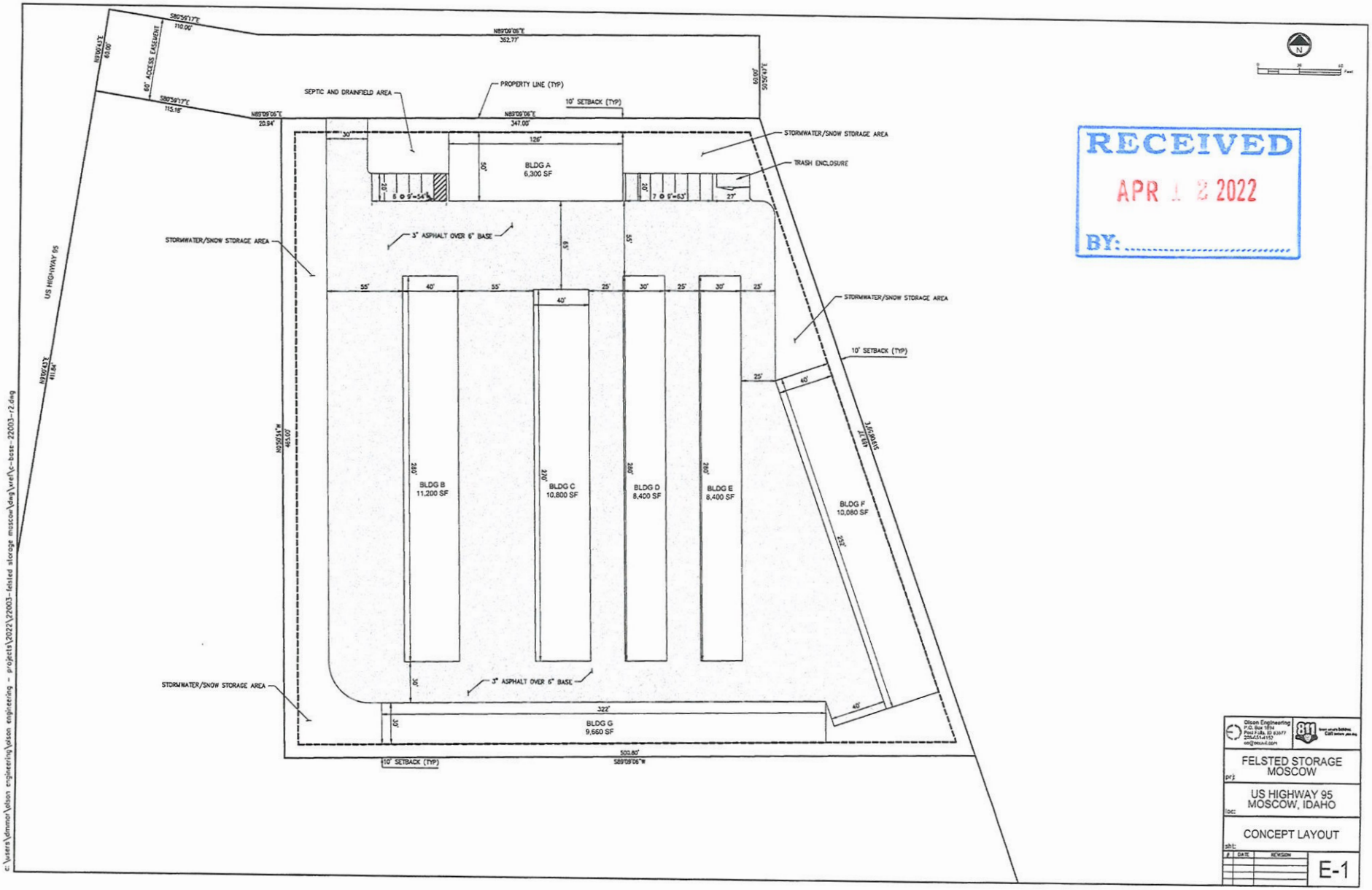

RECEIVED
APR 1 2 2022
BY:

MK: NUMBERS & DESCRIPTIONS

CC	Climate Control
CP#	Ceiling Panel
DW-	Divider Wall
DWS#	Divider Wall Stud
DWT#	Divider Wall Track
DWP#	Divider Wall Panel
EW-	End Wall
EWS#	End Wall Stud
EWT#	End Wall Track
EWP#	End Wall Panel
MSES#	Eave Strut
FC	Furring Channel
FS#	Flat Strap
FWS#	Fire Wall Stud
H-	Header
HDS#	Header Stud
HDT# / HT	Header Track
M-	Mullion
MSMNC#	Mullion Cover
MNG#	Mullion Girt
MNT#	Mullion Track
MSDE#	Drip Edge
MSGT#	Gable Trim
MSJT#	Jamb Trim
MSMNB#	Mullion Backer
MSOC / 5OC	Outside Corner
MSSW# / 5SW	Side Wall Flashing
MSSA#	Sheeting Angle
MSST#	Sloped Track
MSIC# / 5IC	Inside corner
MSRC	Ridge Cap
PEC#	Purlin End Cap
PW-	Partition Wall
PWP#	Partition Wall Panel
PLN#	Purlin
SW-	Side Wall
SWG#	Side Wall Girt
SWP#	Side Wall Panel
SWT#	Side Wall Track
TC	Temperature Control
WS#	Wall Stud
WT#	Wall Track
WP#	Wainscot Panel
5CM	C-Metal
5MSBM	Base Metal
5MSBT	Base Trim
5MSCEF / MSET	Eave Flashing / Trim
5MSPC / MSPC	Peak Cap
5SB	Snow Break
5WL	Wall Light Flashing
7FCRRI	R.R. Inside Closure
7FCRRO	R.R. Outside Closure
7FCLRI	L.R. Inside Closure
7FCLRO	L.R. Outside Closure
7MSBC	Base Clip
7MSPC54	Purlin Clip
7MSDC	Divider Clip
7RC	Rolled Closure
	Anchor Bolt Location
	L.V.F. Location

DRAWING ABREVIATIONS

@	At
A.B.	Anchor Bolt
BLDG	Building
C.L.	Center Line
CLR	Clear
CC	Climate Control
DET	Detail
DIM	Dimension
DWG	Drawing
EA	Each
FDN	Foundation
F.F.	Finish Floor
FRR	Fire Resistance Rated
FRRW	Fire Resistance Rated Wall
F.S.	Far Side
FT	Feet or Foot
GA	Gauge / Gage
GALV	Galvanized
G.L.	Grid Line
GYP	Gypsum
HORIZ	Horizontal
HWH	Hex Washer Head
INSUL	Insulation
LR	Loc-Rib
L.V.F.	Low Velocity Fastener
M.B.I.	Metal Building Insulation
MANUF	Manufacturer
MIL	1/1000"
MK	Mark Number
N/A	Not Applicable
N.S.	Near Side
N.T.S.	Not To Scale
O.C.	On Center
OPP	Opposite
PPH	Phillips Pancake Head
REF	Reference
REINF	Reinforced
REQ'D	Required
RR	Rolled Rib
SECT	Section
SIM	Similar
STD	Standard
TYP	Typical
TC	Temperature Control
U.N.O.	Unless Otherwise Noted
VERT	Vertical
W.P.	Working Point

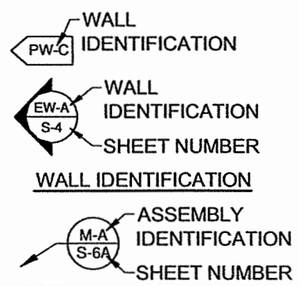

BUILDING INSTALLATION NOTES:

1. The Foundation and Slab must be adequately cured and in accordance with the Foundation design.
2. All surfaces to receive the bottom Track shall be in a level and smooth condition.
3. All Anchor Bolts, L.V.F. and Holdowns must be accurately placed per the structural framing assembly drawings.
4. Bottom Track shall be securely anchored to the foundation as shown on the Drawings.
5. Abutting lengths of Track shall be securely anchored to a common structural element or spliced with a 12" length of the same depth Stud (U.N.O.).
6. Field cut galvanized steel shall be touched-up with zinc-rich paint. (By Others)
7. All drilling chips and metal shavings shall be removed and disposed of properly.
8. Lap Flashings and Trims a minimun of 4" and seal as required for weather tightness.
9. To allow for manufacturing and erection tolerances, some materials are made shorter than their theoretical exact length.
10. RSPSS should be notified if any discrepancies are discovered between these plans and the actual job site conditions, or the material received for this job.
11. RSPSS is NOT resposible for building modifications or other actions taken prior to authorization by an RSPSS representative.
12. Back charges must have written approval from RSPSS prior to the commencement of work.
13. It is recommended that all material either supplied by RSPSS, or others, be inspected, inventoried and photographed by the receiving party at the time of delivery, prior to unpackaging or when suspected damage has occured.

METAL STUDS, JOISTS AND ACCESSORIES:

A. 12, 14 & 16 GA galvanized steel must meet the minimum requirements of ASTM A653 SQ Grade 50, Class 1 (Fy=50ksi). 18 & 20 GA galvanized steel must meet the minimum requirements of ASTM A653 SQ Grade 33, Class 1 (Fy=33ksi). Galvanized coatings must meet ASTM A525 Specification.
B. Design of structural members shall be in accordance with the "AISI" "North American Specification for the Design of Cold-Formed Steel Structural Members" and "AISC" "Manual of Steel Construction".
C. Fastening of components shall be with self-drilling screws or welding. Screws or welds shall be sufficient size to insure the strength of the connection. All welds of galvanized steel shall be touched up with a zinc-rich paint (By Others). Weld design, designation and publication is By Others.
D. 600S163-43 may be replaced with 600SFS162-43EQS and 400S162-43 may be replaced with 400SFS162-43EQS stud shapes a RSPSS's discretion.

NOTE: REFER TO STANDARD DETAILS FOR ADDITIONAL ASSEMBLY INFORMATION.

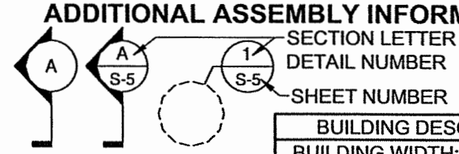

SECTION & DETAIL IDENTIFICATION

BUILDING DESCRIPTION:	ANCHORS: FRAMING TO SLAB
BUILDING WIDTH: 30'-0" BUILDING LENGTH: 250'-0" EAVE HEIGHT: 8'-6" ROOF TYPE: 2:12 ; GABLE	LVF: 0.145" Ø WITH 1.2" MINIMUM EMBEDMENT BOLT: 3/8"Ø x 3" Titen HD, MANUFACTURED BY SIMPSON STRONG-TIE, OR EQUAL.

DRAWING INDEX

T-1	TITLE SHEET
F-0	SLAB LAYOUT
S-1	FLOOR PLAN
S-2	ROOF FRAMING
S-3	ELEVATIONS
S-4	BUILDING SECTION(S)

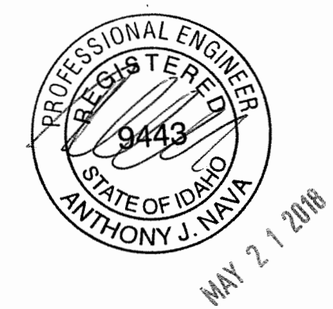

GENERAL INFORMATION

JOB ADDRESS:	3839 W. PRAIRIE AVE
OWNER:	--
CONTRACTOR:	AMERICAN UNIVERSAL STORAGE, LLC
BUILDING USE:	SELF-STORAGE
CONSTRUCTION TYPE:	II - B
OCCUPANCY:	GROUP S, DIV 1

DESIGN INFORMATION

BUILDING CODE:	2015 IBC
DESIGN CODE:	2012 AISI
SNOW LOAD:	63 PSF (GROUND)
WIND SPEED, V_{3s}:	105 MPH
EXPOSURE:	C
SEISMIC DESIGN CATEGORY:	C
RISK CATEGORY:	I

FOR CUSTOMER SERVICE CONTACT:
RSP STRUCTURAL SYSTEMS
PHONE :(509) 535-0917 or (888) 811-4057
FAX :(509) 535-2481 or (877) 277-8671

THIS DRAWING PACKAGE, ITS DESIGN, DETAIL AND INVENTION, ARE THE PROPERTY OF RSP STRUCTURAL SYSTEMS, INC, SUBMITTED TO THE RECIPIENT IN CONFIDENCE, AND SHALL NOT BE COPIED IN ANY MANNER NOR DISCLOSED TO ANY OUTSIDE PARTY WITHOUT THE PRIOR WRITTEN CONSENT OF THIS COMPANY. THEY SHALL BE USED EXCLUSIVELY FOR REFERENCE WORK ON CONTRACTS OR PROPOSALS SUBMITTED BY RSP STRUCTURAL SYSTEMS, INC AND SHALL BE RETURNED ON REQUEST.
ALL RIGHTS RESERVED.

RSP STRUCTURAL SYSTEMS INC

AMERICAN UNIVERSAL STORAGE
BUILDING 8
3839 W. PRAIRIE AVE
HAYDEN, ID

8

DRAWN BY	CHKD BY	APPROVED	SCALE	JOB NO.
JZW			AS NOTED	18087
TITLE			TITLE SHEET	SHEET T-1

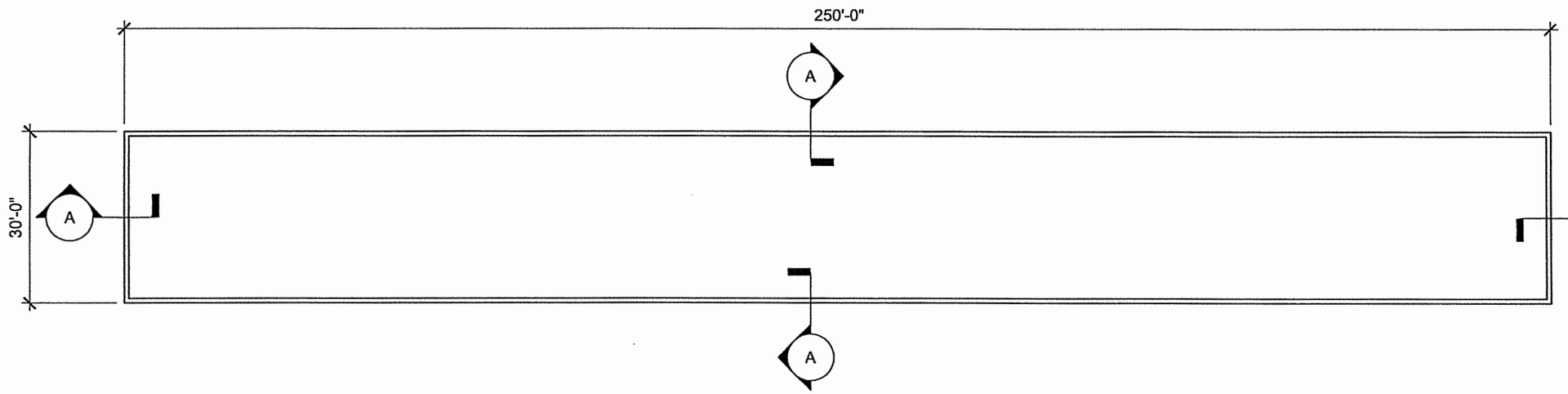

SLAB LAYOUT
SCALE: N.T.S.

PROFESSIONAL ENGINEER
REGISTERED
9443
STATE OF IDAHO
ANTHONY J. NAVA

MAY 2 1 2018

ATTENTION:
IF FIRE WALLS ARE REQUIRED CONTACT RSP STRUCTURAL SYSTEMS FOR SLAB CHANGES

IMPORTANT:
SLAB DIMENSIONS SUBJECT TO CHANGE. DO NOT USE FOR CONSTRUCTION

THIS DRAWING IS FOR SLAB LAYOUT AND SHALL NOT BE CONSIDERED THE FOUNDATION DESIGN DRAWING. SEEK A DESIGN PROFESSIONAL FOR THE SOILS INVESTIGATION AND THE FOUNDATION DESIGN. OWNER/ERECTOR/BUILDING DEPARTMENT SHALL DETERMINE ANY/ALL REQUIREMENT(S) FOR FIREWALLS

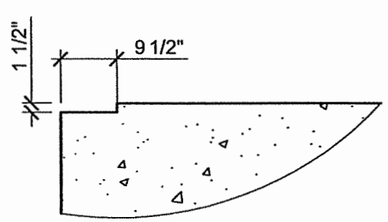

A TYP DOOR NOTCH
SCALE: N.T.S.

RSP STRUCTURAL SYSTEMS INC

AMERICAN UNIVERSAL STORAGE
BUILDING 8
3839 W. PRAIRIE AVE
HAYDEN, ID

DRAWN BY	CHKD BY	APPROVED	SCALE	JOB NO.
JZW			AS NOTED	18087
TITLE				SHEET
SLAB LAYOUT				F-0

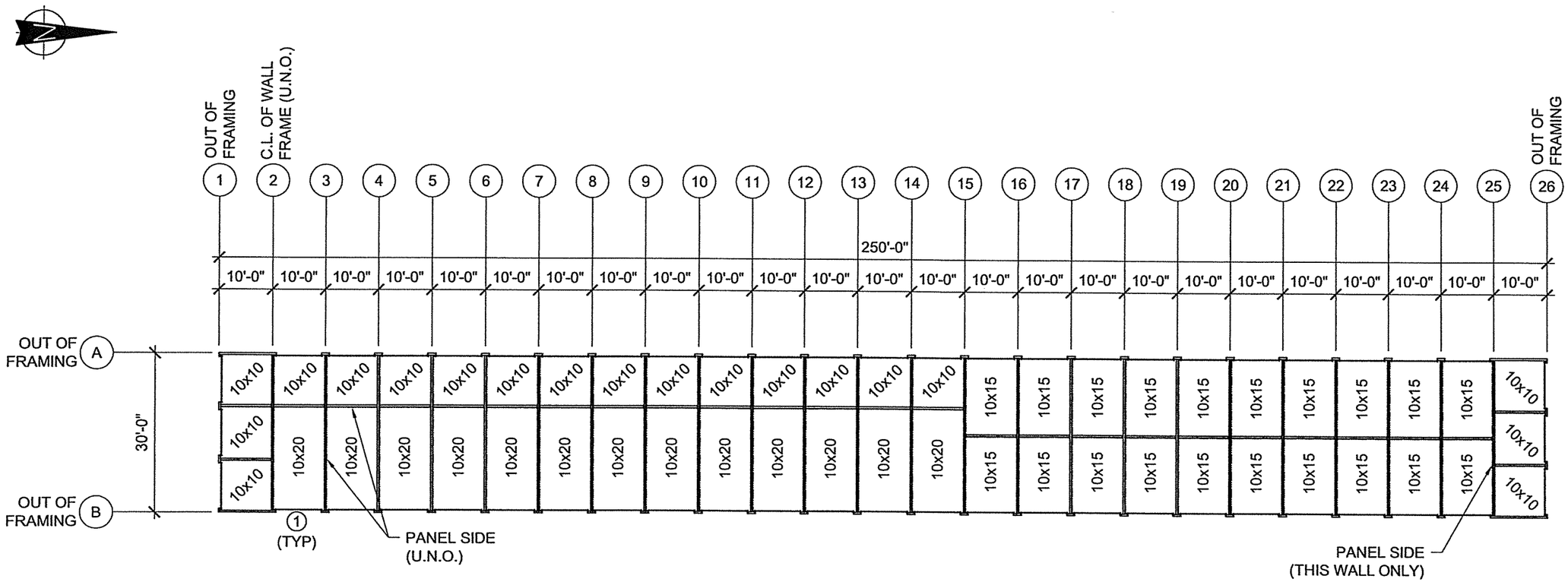

FLOOR PLAN

SCALE: N.T.S.

PROFESSIONAL ENGINEER REGISTERED 9443 STATE OF IDAHO ANTHONY J. NAVA

MAY 21 2018

IMPORTANT:

DOOR SIZES SUBJECT TO CHANGE. DO NOT ORDER FROM APPROVAL DRAWINGS

DOOR SCHEDULE							
No	QTY	WIDTH	x	HEIGHT	TYPE	SUPPLIED BY	COLOR
1	52	8'-6"	x	7'-0"	MINI ROLL-UP	RSPSS	GLOSSY WHITE

RSP STRUCTURAL SYSTEMS INC

AMERICAN UNIVERSAL STORAGE
BUILDING 8
3839 W. PRAIRIE AVE
HAYDEN, ID

DRAWN BY	CHKD BY	APPROVED	SCALE	JOB NO.
JZW			AS NOTED	18087

TITLE	SHEET
FLOOR PLAN	S-1

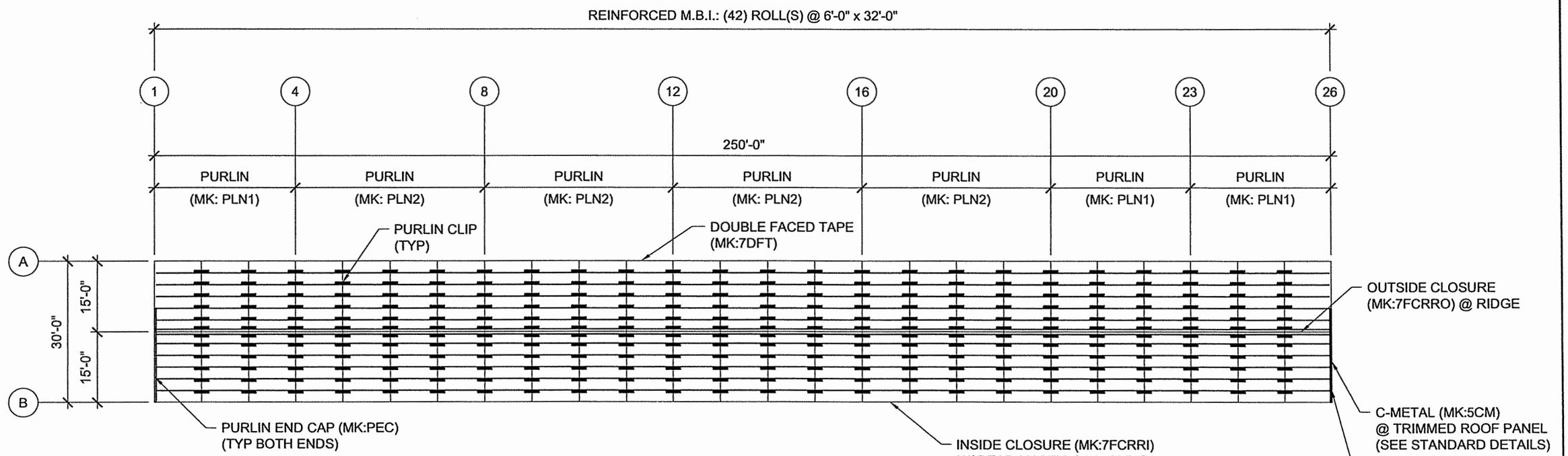

ROOF FRAMING

SCALE: N.T.S.

PROFESSIONAL ENGINEER REGISTERED 9443 STATE OF IDAHO ANTHONY J. NAVA

MAY 21 2018

NOTE: LOCATE PURLIN CLIPS & PURLINS PER PARTITION WALL FRAMING SHEET(S)

MATERIALS LIST								
MK	NO	QTY	WIDTH	SHAPE	FLNG	THICK	LENGTH	FINISH
5CM	00	3	STD	C-METAL	STD	29 GA	10'-6"	GALV
7BU	00	2	3/4"	STRIP MASTIC	STD	STD	45'-0"	--
7DFT	00	3	1 1/2"	DOUBLE FACED TAPE	--	--	180'-0"	--
7FCRRI	00	168	--	INSIDE CLOSURE	--	--	3'-0"	--
7FCRRO	00	168	--	OUTSIDE CLOSURE	--	--	3'-0"	--
7SM	00	62	--	BEAD MASTIC	--	--	50'-0"	--
MBI	00	42	6'-0"	REINFORCED M.B.I.	--	2"	32'-0"	--
PEC	00	4	600	T	200	54 MIL	15'-2"	GALV
PLN	01	36	600	S	162	54 MIL	29'-11 3/4"	GALV
PLN	01	48	600	S	162	54 MIL	39'-11 3/4"	GALV
RR	00	168	3'-0"	ROLLED RIB	STD	29 GA	15'-4"	ASH

RSP STRUCTURAL SYSTEMS INC

AMERICAN UNIVERSAL STORAGE
BUILDING 8
3839 W. PRAIRIE AVE
HAYDEN, ID

DRAWN BY	CHKD BY	APPROVED	SCALE	JOB NO.
JZW			AS NOTED	18087

TITLE	SHEET
ROOF FRAMING	S-2

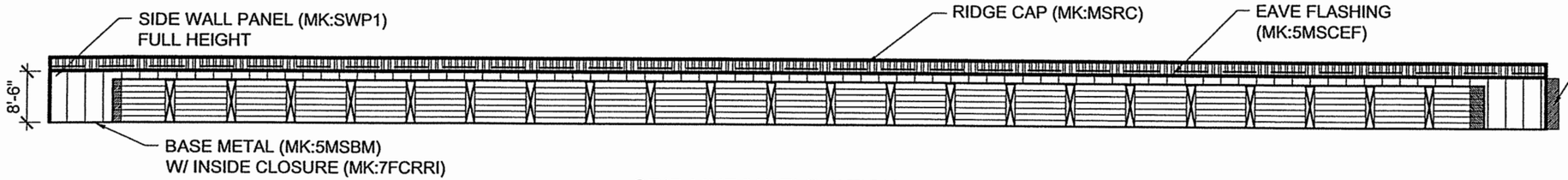

GRID LINE "A" ELEVATION

SCALE: N.T.S.

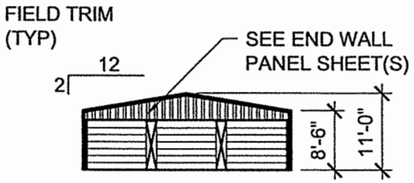

GRID LINE "1" ELEVATION

SCALE: N.T.S.

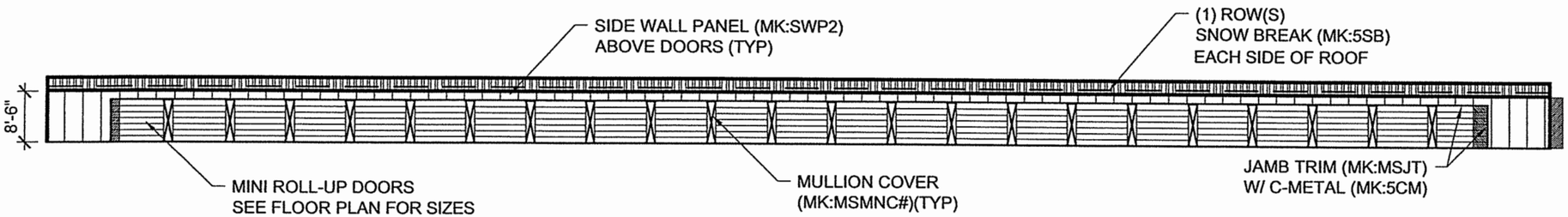

GRID LINE "B" ELEVATION

SCALE: N.T.S.

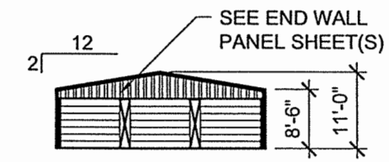

GRID LINE "26" ELEVATION

SCALE: N.T.S.

PROFESSIONAL ENGINEER
REGISTERED
9443
STATE OF IDAHO
ANTHONY J. NAVA
MAY 2 1 2018

MATERIALS LIST

MK	NO	QTY	WIDTH	SHAPE	FLNG	THICK	LENGTH	FINISH
5CM	00	50	STD	C-METAL	STD	29 GA	10'-6"	RED
5MSBM	00	4	STD	BASE METAL	STD	29 GA	10'-6"	ASH
5MSCEF	00	50	STD	EAVE FLASHING	STD	29 GA	10'-6"	RED
5SB	00	50	STD	SNOW BREAK	STD	29 GA	10'-6"	ASH
7FCRRI	00	18	--	INSIDE CLOSURE	--	--	3'-0"	--
MSJT	00	50	4"	JAMB TRIM	STD	29 GA	10'-6"	RED
MSMNC	00	44	1'-6"	MULLION COVER	STD	STD	7'-0"	ASH
MSRC	00	25	STD	RIDGE CAP	STD	29 GA	10'-6"	ASH
SWP	01	18	3'-0"	RR	STD	29 GA	8'-7"	ASH
SWP	02	150	3'-0"	RR	STD	29 GA	1'-7"	ASH

RSP STRUCTURAL SYSTEMS INC

AMERICAN UNIVERSAL STORAGE
BUILDING 8
3839 W. PRAIRIE AVE
HAYDEN, ID

DRAWN BY	CHKD BY	APPROVED	SCALE	JOB NO.
JZW			AS NOTED	18087

TITLE: ELEVATIONS

SHEET: **S-3**

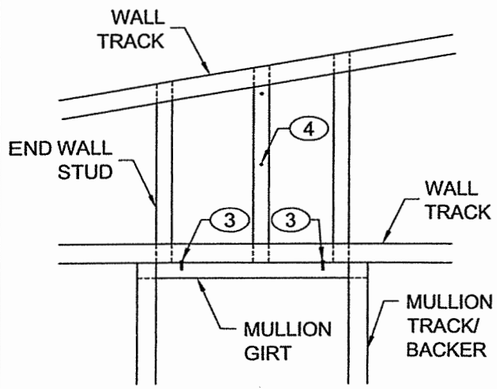

HEADER TO MULLION CONNECTION

SCALE:N.T.S.

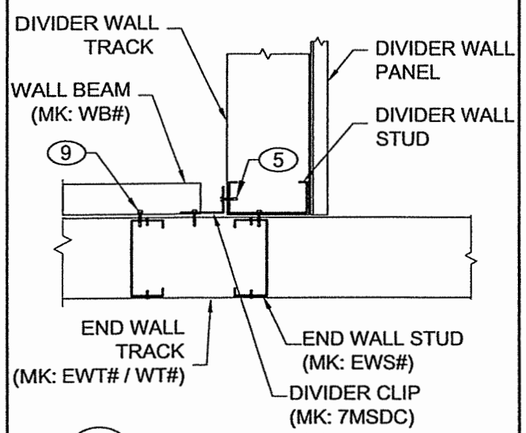

A WALL BEAM CONNECTION

SCALE:N.T.S.

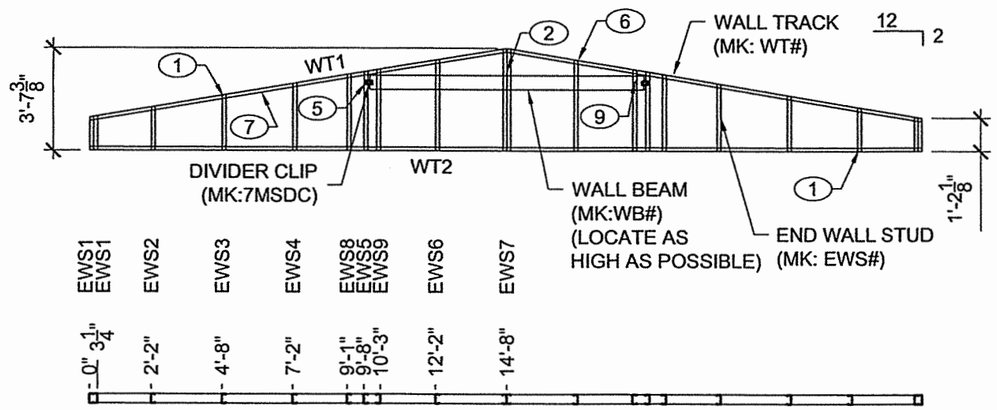

EW-A END WALL FRAMING @ GRID LINE(S) 1 + 26

SCALE: N.T.S. (BUILD 2 UNIT(S))

MATERIALS LIST

MK	NO	QTY	WIDTH	SHAPE	FLNG	THICK	LENGTH	FINISH
7MSDC	00	2	250	DIVIDER CLIP	150	43 MIL	0'-3"	GALV
A	–	18	–	HWH	–	–	1/2"	GALV
AA	–	160	–	PPH	–	–	1/2"	GALV
D	–	100	–	–	–	–	3/4"	GALV
EWS	01	4	400	S	162	43 MIL	1'-2"	GALV
EWS	02	2	400	S	162	43 MIL	1'-6 1/4"	GALV
EWS	03	2	400	S	162	43 MIL	1'-11 1/4"	GALV
EWS	04	2	400	S	162	43 MIL	2'-4 1/4"	GALV

MATERIALS LIST

MK	NO	QTY	WIDTH	SHAPE	FLNG	THICK	LENGTH	FINISH
EWS	05	2	400	S	162	43 MIL	2'-9 1/4"	GALV
EWS	06	2	400	S	162	43 MIL	3'-2 1/4"	GALV
EWS	07	2	400	S	162	43 MIL	3'-7"	GALV
EWS	08	2	400	S	162	43 MIL	2'-8"	GALV
EWS	09	2	400	S	162	43 MIL	2'-10 1/4"	GALV
WB	01	1	600	S	162	68 MIL	9'-7"	GALV
WT	01	2	400	T	150	43 MIL	14'-10"	GALV
WT	02	1	400	T	150	43 MIL	29'-3 3/4"	GALV

FASTENER SCHEDULE

KEY	DESCRIPTION
1	(AA, 2 EA PER SIDE) WALL TRACK TO WALL STUD
2	(A, 2 EA TOP, MID POINT & BOTTOM) WALL STUDS BACK TO BACK
3	(D, 1 EA) BOTTOM TRACK TO TOP MULLION GIRT @ JAMB
4	(D, 2 EA) DIVIDER WALL STUD TO WALL STUD @ TOP & MID POINT OF WALL STUD
5	(D, 2 EA) DIVIDER CLIP TO DIVIDER WALL STUD / WALL BEAM
6	(D, 3 EA) TOP TRACK TO EACH PURLIN
7	(A, 1 EA) PURLIN END CAP TO TOP WALL TRACK @ MIDPOINT BETWEEN STUDS
8	N/A
9	(D, 6 EA PER STUD) WALL BEAM TO EACH WALL STUD

ID: EW 306 3000 2G

REV:

LABEL	DESCRIPTION
A	#8-18x1/2" TEK GALVANIZED HWH
AA	#8-18x1/2" TEK GALVANIZED PPH
B	#12 x 3/4" STITCH PAINTED OR GALV WITH WASHER
C	#12-14 x 1" TEK PAINTED OR GALV WITH WASHER
D	#12-14 x 3/4" TEK GALV WITHOUT WASHER
E	#12-14 x 2" TEK GALV WITHOUT WASHER
H	#12-14 x 1-1/2" PAINTED OR GALV WITH WASHER

PROFESSIONAL ENGINEER REGISTERED 9443 STATE OF IDAHO ANTHONY J. NAVA

MAY 21 2018

RSP STRUCTURAL SYSTEMS INC

WIDTH: 30'-0"

HEIGHT: 1'-2 1/8"

SLOPE: 2:12

NOTE: 10'-0" BAYS ; 8'-6" DOORS

DRAWN BY	CHKD BY	APPROVED	SCALE	JOB NO.
JZW	SLS	###	AS NOTED	18087

TITLE: END WALL FRAMING

SHEET: S-4A

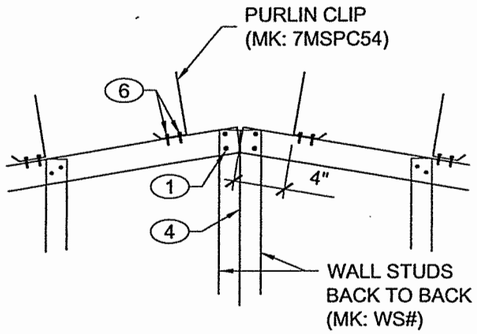

TYP. PURLIN CLIP TO FRAME DETAIL

SCALE: N.T.S.

NOTE: PURLIN CLIPS ARE NOT REQUIRED @ ROOF STEP CONDITIONS

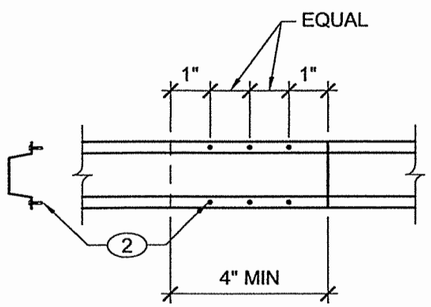

TYP. FURRING CHANNEL SPLICE

SCALE: N.T.S.

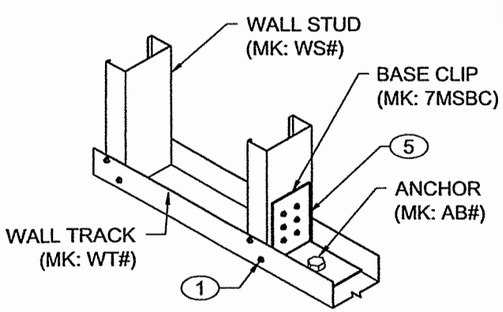

TYP. BASE CLIP CONNECTION

SCALE: N.T.S.

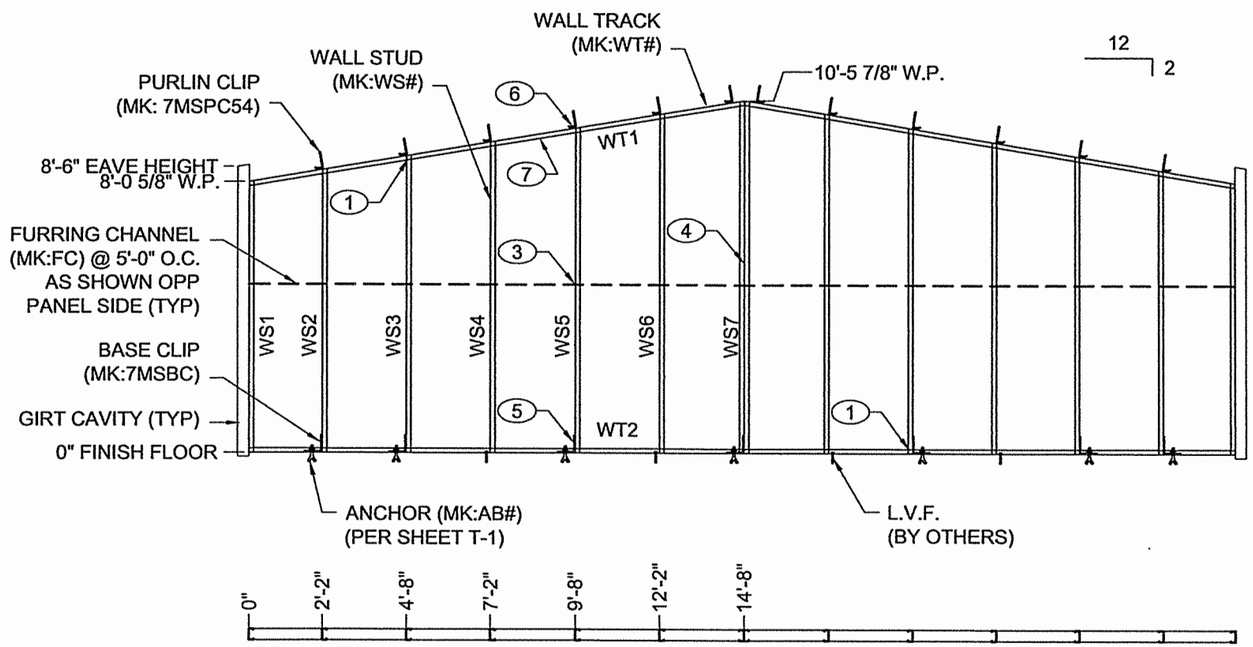

PW-A PARTITION WALL FRAMING @ GRID LINE(S) 2-25

SCALE: N.T.S. (BUILD 24 UNIT(S))

MATERIALS LIST

MK	NO	QTY	WIDTH	SHAPE	FLNG	THICK	LENGTH	FINISH
7MSBC	–	7	400	BASE CLIP	400	54 MIL	0'-3"	GALV
7MSPC54	–	12	STD	PURLIN CLIP	STD	54 MIL	2'-0"	GALV
A	–	200	–	HWH	–	–	1/2"	GALV
AB		7	–	ANCHOR	–	–	–	–
D	–	72	–	–	–	–	3/4"	GALV
FC	00	2	087	F	125	30 MIL	20'-0"	GALV
WS	01	2	400	S	162	43 MIL	8'-0 1/2"	GALV
WS	02	2	400	S	162	43 MIL	8'-4 3/4"	GALV

MATERIALS LIST

MK	NO	QTY	WIDTH	SHAPE	FLNG	THICK	LENGTH	FINISH
WS	03	2	400	S	162	43 MIL	8'-9 3/4"	GALV
WS	04	2	400	S	162	43 MIL	9'-2 3/4"	GALV
WS	05	2	400	S	162	43 MIL	9'-7 3/4"	GALV
WS	06	2	400	S	162	43 MIL	10'-0 3/4"	GALV
WS	07	2	400	S	162	43 MIL	10'-5 1/2"	GALV
WT	01	2	400	T	150	43 MIL	14'-10"	GALV
WT	02	2	400	T	150	43 MIL	14'-7 3/4"	GALV

FASTENER SCHEDULE

KEY	DESCRIPTION
1	(A, 2 EA PER SIDE) WALL TRACK TO WALL STUD
2	(A, 6 EA) FURRING CHANNEL SPLICE
3	(A, 2 EA) FURRING CHANNEL TO EACH WALL STUD
4	(A, 2 EA @ 30" O.C.) WALL STUDS BACK TO BACK
5	(A, 6 EA) BASE CLIP TO WALL STUD
6	(D, 6 EA) PURLIN CLIP TO TOP WALL TRACK
7	(A, 1 EA) PURLIN END CAP TO TOP WALL TRACK @ MID-POINT, BETWEEN STUDS @ STEPS ONLY

ID: PF 086 3000 2 G

REV:

LABEL	DESCRIPTION
A	#8-18x1/2" TEK GALVANIZED HWH
AA	#8-18x1/2" TEK GALVANIZED PPH
B	#12 x 3/4" STITCH PAINTED OR GALV WITH WASHER
C	#12-14 x 1" TEK PAINTED OR GALV WITH WASHER
D	#12-14 x 3/4" TEK GALV WITHOUT WASHER
E	#12-14 x 2" TEK GALV WITHOUT WASHER
H	#12-14 x 1-1/2" PAINTED OR GALV WITH WASHER

RSP STRUCTURAL SYSTEMS INC

WIDTH: 30'-0"
EAVE HEIGHT: 8'-6"
SLOPE: 2:12
NOTE: 4" SIDE WALLS / 6" PURLINS

PROFESSIONAL ENGINEER REGISTERED 9448 STATE OF IDAHO ANTHONY J. NAYA

MAY 2 1 2008

DRAWN BY	CHKD BY	APPROVED	SCALE	JOB NO.
JZW	SLS	###	AS NOTED	18097

TITLE: PARTITION WALL FRAMING

SHEET: S-4B

Application for Conditional Use Permit

Instructions

Please complete the application and required attachments. For certain uses, additional information may be necessary. Incomplete applications or applications without all required attachments will not be accepted. A public hearing will be scheduled only after staff has determined the application is technically complete.

Please submit to: *Latah County Department of Planning & Building PB@latah.id.us*
Latah County Courthouse 522 S Adams, Room 205, P.O. Box 8068, Moscow, ID 83843 (208) 883-7220

1. Applicant Information

a. Applicant Name	b. Home Phone / Work Phone	c. Email	
Commercial Real Estate Consultants	208.819.6004	insideoutco@gmail.com	
d. Mailing Address	**e. City**	**f. State**	**g. Zip code**
3839 W Prairie Ave	Hayden	ID	83835
h. Property Owner (if different than applicant)	**i. Home Phone**	**j. Work Phone**	
William Felsted			
k. Mailing Address	**l. City**	**m. State**	**n. Zip code**
322 E High Dr	Spokane	WA	99203

2. General Site Information

a. Assessor's Parcel Number(s)			b. Parcel Address (if applicable)
RP04000190010A			2730 US Highway 95
c. Acreage of Existing Parcel	**d. Zoning**	**e. Comprehensive Plan Designation**	**f. Floodplain designation(s)**
6.59	Motor Busir	Moscow ACI	N/A
g. Is the parcel within an Area of City Impact?	■ Yes. ☐ No.	**h. Impact City**	**i. Road Used to Access Site**
		Moscow	Highway 95

Note: Sites within an area of city impact may require additional notification time prior to public hearings or a hearing before the other jurisdiction.

j. Existing Uses

Vacant/ Farm Equipment Sales/Service

3. Service Provider Information (please attach additional information if requested)

a. Fire District	b. Road District	c. School District
Rural	ITD and Highway Dept.	Moscow

d. Source of Potable Water (i.e. water district or private well)	e. Sewage Disposal (i.e. sewer district or private septic system)
Proposed private well	proposed septic

4. Adjacent Properties Information

a. Zoning of Adjacent Properties	b. Existing Uses of Adjacent Properties
Motor Business	Commercial, Industrial, Vacant

5. Permit Information

a. What provision of the Latah County Zoning Regulations allows the proposed use to be considered for a Conditional Use Permit in the Zoning District in which the property is located?

Title 4

Note: If the proposed use is not specifically listed, please contact the Department prior to submittal to determine if the use is similar to those that are specifically listed as conditionally permitted uses. The Department may require additional information in order to make a determination.

6. Authorization

The applicant does hereby certify that all of the above statements and information in any attachments transmitted herewith are true, and further acknowledges that approval of this application may be revoked if it is found that any such statements are false.

a. Signature of Applicant	b. Date
	3/8/22
c. Signature of Property Owner (if different than applicant)	**d. Date**

7. Attachments

All attachments should be reproducible in black and white at 8½" x 11"

☐ **Fee:** ($500.00) Make checks payable to Latah County.

☐ **Completed Narrative Worksheet:** See instructions on the Conditional Use Permit Narrative Worksheet.

☐ **Site Plan:** The site plan should include a north arrow, location of roads and rights-of-way, existing buildings, improvements and features; the location and dimensions of proposed facilities, improvements and operations; as well as any other details necessary for the Zoning Commission to make a decision.

☐ **Other Attachments:** Required by staff / Zoning Commission for certain proposed uses

Office Use Only

Date Received	Amount	Receipt No	By
3/25/22	500.00		EM
CUP			
1251			
Hearing Date			

RECEIVED
APR 12 2022
BY: .....

08 24 2021

Conditional Use Permit Narrative Worksheet

Application Information

Applicant - Name: Commercial Real Estate Consultants- Jeramie Te

Phone Number: 208.819.6004

Purpose: To assist the Zoning Commission in making an informed decision regarding the applicant pursuant to the requirements of the Latah County Land Use Regulations.

Instructions: Please respond to each section of this form. If you need more space, you may attach additional sheets to the worksheet.

Description of Proposal

Describe your proposal in detail. Include all aspects of your proposal

The owner of the property is proposing a self storage facility to be constructed in 3-4 phases. Complete build out will yield approximately 65,000 sq. ft of storage, seven buildings and 250-300 units. Construction will be steel frame, sheet metal siding and roofing, slab on grade. The site will be paved and have a perim fence. The facility will have an on-site office and restroom. A portion of land adjacent to Highway 95 will remain vacant and be reserved for future commercial development. Phasing will be determined by market demand. The size of the site allows for flexibility in design. If approved, the development team will work w agencies to comply with design criteria including setbacks, parking, circulation, lighting, etc.

Existing Uses of Property

Please describe what uses, structures and features currently occupy the property.

The property is vacant land with an existing gravel approach from Highway 95

Consistency Requirements

Please respond to each of the three criteria listed in 9-7A-3 of the Latah County Land Use Regulations by explaining how your proposal meets each criteria. If the provided space is insufficient, please attach your responses to this packet.

A. The use is not detrimental to the health or safety of those in the surrounding area.

The proposed use is consistent with the development in the area and will be developed and constructed in accordance with the most recent design standards. Traffic impacts for self storage are the least impactful of almost all other commercial and industrial uses.

B. The use will not otherwise adversely affect permitted uses or the enjoyment of such uses in that zone to any greater extent than a permitted use in that zone.

Self storage is one of the least impactful uses possible within the zoning district. Hours of operation tend t be during daylight hours. There will be no noise or vibration nuisances created by the proposed use.

Received 04-12-2022

C. **The use will not require facilities or services with excessive costs to the public.**

No public infrastructure will be utilized by the proposed development with the exception of the commercial approach to US-95. Increased tax rate will more than mitigate any infrastructure useage.

Received 04-12-2022

LUP2022-0012

Anderson & Walker Est. 1954
Attorneys at Law
(a nonpartnership)

William E. Anderson
John W. Walker, P.A.
Michael J. Pattinson, Assoc.

1208 Alturas Drive
P.O. Box 8447
Moscow, Idaho 83843
208.882.4536
208.882.4580 Fax

September 30, 2003

Mr. Michael Kaufman
FELSTED AND KAUFMAN LLP
2985 Mayfair Ridge
Lewiston, ID 83501

Dear Mr. Kaufman:

Enclosed you will find the original Easement that has been recorded in Latah County under Recorder's Fee No. 480997. Please keep this original document in a safe place. Our office has retained a copy for our file. We have also submitted a copy of the document to Mr. Clyde.

In the event you should have any questions or concerns, please advise. Thank you.

Sincerely,

ANDERSON & WALKER

T.L. Scroggins Cossairt
Paralegal-Legal Assistant

enclosure

RECEIVED
APR 12 2022
BY: .....

Received 04-12-2022

LUP2022-0012

2

September 16, 2003

Legal Description for a 60' Wide Easement for Mike Kaufman

A legal description for a 60' wide access and utility easement located in the NE¼ SE¼ of Section 19, T39N, R5W BM, and being more particularly described as follows:

Beginning at the northwest corner of Lot 1 of the Felsted – Kaufman Subdivision to Latah County, Idaho. Said point being on the easterly right-of-way of Highway 95 and the True Point of Beginning.

Thence N 9°00'43" E, 60.00 feet along said right-of-way;;
Thence S 80°59'17" E, 110.00 feet;
Thence N 89°09'06" E, 362.77 feet;
Thence S 0°50'47" E, 60.00 feet to the northeast corner of said Lot 1;
Thence S 89°09'06" W, 367.94 feet along the north line of said Lot 1;
Thence, continuing along said north line, N 80°59'17" W, 115.18 feet to the True Point of Beginning.

PROFESSIONAL ENGINEER & LAND SURVEYOR
REGISTERED
3003
9-16-03
STATE OF IDAHO
LARRY J. HODGE

F:\2270-Felsted & Kaufman Survey\Word-2270\2270B\Legal 60' Easement.doc

RECEIVED
APR 12 2022
BY: .....

Received 04-12-2022

LUP2022-0012

3

480997

EASEMENT

THIS EASEMENT AGREEMENT is made and entered into this 25th day of September, 2003, by and between CLYDE FIVE LLC, an Idaho Limited Liability Company, whose address is 3060 Highway 95 South, Moscow, Idaho 83843, hereinafter referred to as "Grantor", and FELSTED AND KAUFMAN LLP, an Idaho Limited Liability Partnership, whose address is 2985 Mayfair Ridge, Lewiston, Idaho 83501, hereinafter referred to as "Grantee".

W I T N E S S E T H:

For and in consideration of the sum of TEN AND NO/100 DOLLARS ($10.00) from Grantee, receipt of which is acknowledged, Grantor grants and conveys unto Grantee a perpetual nonexclusive easement for ingress, egress and utilities described as follows, to-wit:

> A 60 foot wide easement located in the NE1/4SE1/4 of Section 19, Township 39 North, Range 5 W.B.M., and being more particularly described as follows:
>
> > BEGINNING at the Northwest corner of Lot 1 of the Felsted-Kaufman Subdivision to Latah County, Idaho. Said point being on the Easterly right-of-way of Highway 95 and the TRUE POINT OF BEGINNING; thence N. 09°00'43" E, 60.00 feet along said right-of-way; thence S. 80°59'17" E, 110.00 feet; thence N. 89°09'06" E, 362.77 feet; thence S. 00°50'47" E, 60.00 feet to the Northeast corner of said Lot 1; thence S. 89°09'06" W, 367.94 feet along the North line of said Lot 1; thence continuing along said North line, N. 80°59'17" W, 115.18 feet to the TRUE POINT OF BEGINNING.

The easement described above shall be constructed and maintained in good repair by the Grantee at its sole cost and expense.

This grant of easement shall run with the land and shall be for the use and benefit of the following described real property currently owned by Grantee and shall be binding on and shall inure

LAW OFFICES OF
W. E. ANDERSON
(A Sole Proprietorship)
&
JOHN W. WALKER, P.A.
(A Professional Corporation)
Moscow, Idaho

RECEIVED
APR 12 2022
BY: .....

Received 04-12-2022

LUP2022-0012

to the benefit of the parties hereto, their heirs, successors, and assigns.

Grantee is the owner of the following described real property located in Latah County, Idaho, to-wit:

> Lot 1 of the Felsted-Kaufman Subdivision to Latah County, as shown on the recorded Plat under Recorder's Fee No. 465476.

Grantee and its successors, and assigns shall indemnify Grantor, its successors, and assigns against any and all liability for injury or property damage to any person or party which shall result from, arise out of, or be attributable to any maintenance, repair, or use of the afore-described easement.

IN WITNESS WHEREOF, the parties hereto have executed this agreement as of the date and year first above written.

GRANTOR:

CLYDE FIVE LLC

By: Robert E. Clyde
Robert E. Clyde, Manager

GRANTEE:

FELSTED AND KAUFMAN LLP

By: Michael Kaufman
Michael Kaufman, Partner

By: William N. Felsted
William N. Felsted, Partner

STATE OF IDAHO)
) **ss.**
County of Latah)

On this 25th day of September, 2003, before me, the undersigned, a Notary Public in and for said State, personally appeared ROBERT E. CLYDE, being a Manager of CLYDE FIVE LLC, and known or identified to me to be the person whose name is subscribed to the foregoing instrument and acknowledged to me that he executed the same on behalf of said Limited Liability Company.

RECEIVED
APR 12 2022
BY: .....

Received 04-12-2022

5

IN WITNESS WHEREOF, I have hereunto set my hand and notarial seal on the date last above written.

Teresa L. Scroggins Cossart
Notary Public for Idaho,
Residing in Latah County.
My commission expires: 06-30-2007.

TERESA L. SCROGGINS COSSART NOTARY PUBLIC STATE OF IDAHO

STATE OF IDAHO)
) ss.
County of Latah)

On this 26th day of September, 2003, before me, the undersigned, a Notary Public in and for said State, personally appeared WILLIAM N. FELSTED and MICHAEL KAUFMAN, being the Partners of FELSTED AND KAUFMAN LLP, and known or identified to me to be the persons whose names are subscribed to the foregoing instrument and acknowledged to me that they executed the same on behalf of said Limited Liability Partnership.

IN WITNESS WHEREOF, I have hereunto set my hand and notarial seal on the date last above written.

Teresa L. Scroggins Cossart
Notary Public for Idaho,
Residing in Latah County.
My commission expires: 06-30-2007.

TERESA L. SCROGGINS COSSART NOTARY PUBLIC STATE OF IDAHO

RECEIVED
APR 2022
BY: .....

480997
AT REQUEST OF:
W.E. ANDERSON
DATE & HOUR:
9.26.03 4:00 pm
SUSAN PETERSEN
LATAH COUNTY RECORDER
FEE $ 9.00 BY S. Chapman
PO BOX 8447
MOSCOW 10838 43

LAW OFFICES
OF
W. E. ANDERSON
(A Sole Proprietorship)
&
JOHN W. WALKER, P.A.
(A Professional Corporation)
Moscow, Idaho

June 13, 2001

Mr. Micheal Kaufman
Felsted and Kaufman, LLP
2985 Mayfair Ridge
Lewiston, ID 83501

Re: Right-of-Way Use Permit No. 02-01-134

Dear Mr. Kaufman:

Enclosed is a right-of-way use permit to construct a 30 foot commercial approach to access U.S. Highway 95 at Milepost 343.41. Also enclosed is Receipt No. 014260 in the amount of $20.

If the Maintenance Foreman noted in the Special Provisions of the permit cannot be contacted for permission to commence work, please contact the Maintenance section in Lewiston at 799-5090.

If we may be of further service, please advise.

Sincerely,

DAVID P. COUCH, P.E.
District Traffic Engineer

DPC:SM:dl
Enclosures

cc: Dean Weyen, City of Moscow

ENTRY NEAR THE MIDDLE OF LOT 1 FOR ENTRANCE FROM HWY 95

RECEIVED
APR 1 8 2022
BY:

Received 04-12-2022

LUP2022-0012

APPLICATION NO. [illegible]

APPROVED BY [illegible]

See: Traffic Manual 11-450

Reg. No.	001540
MP to MP	343.-1 Rt.
Permit No.	02-01-134
Rec No.	014260
Fee $	20.00

Project No. F.A.P. 18-A (2) Route U.S. 95

1308+00 Rt. to _____ 1/2 Mile South of Moscow

Station to Station Distance from Nearest Town or Jct

Inspection Fee Required _ $____ Performance Bond Required _ $_____

Type Access Control S.A.P. Board Minute Entry Date _____

Quantity 1 Width 30 ft. Est Volume 20 Posted Speed 60

Commercial Sight Distance: Left 800+ ft. Right 800+ ft.

Type-Residence,Commercial,Field,other etc.

Culvert: Size: 30 in. Length: 65 ft.

Explain Other/
Business Type: Farm Equipment Sales

A PLAN OF PROPOSED WORK AND APPLICABLE TRAFFIC CONTROL PLANS MUST BE ATTACHED.

Special Provisions:

"SEE ATTACHED"

RECEIVED
APR 1 8 2022
BY: .....

I certify that I am the owner or authorized representative of the proposed property to be served and agree to do the work requested hereon in accordance with the general requirements printed on the reverse side, the special provisions and the plans made a part of the permit. This permit shall be void unless the work herein contemplated shall have been completed before June 30, 2002

Company and Address

FELSTED & KARKEMAN LLP — MICHAEL KARKEMAN (208) 743-6182
APPLICANT PHONE

3955 MAYFAIR RIDGE

LEWISTON ID 83501 — Michael Karkeman — 10 MAY 2001
CITY STATE ZIP SIGNATURE OF AUTHORIZED REPRESENTATIVE DATE

Subject to all terms, conditions and provisions shown on this form or attachments, Permission is hereby granted to the above named applicant to perform the work described.

Local Government Approval When Required

By: _____ _____
Entity

Title: _____

State Highway Administrator

By: [signature] 6/12/01
District Engineer Date

2

• IF FEE ASSESSED, PERMIT IS NOT VALID UNLESS ACCOMPANIED BY RECEIPT (DH-1958)

Received 04-12-2022

ITE-2162 3-92
(Reverse Side)

GENERAL REQUIREMENTS

1. Approaches shall be for the bona fide purpose of securing access and not for the purpose of parking, conducting business, or servicing vehicles on the highway right of way.

2. No revisions or additions shall be made to an approach or its appurtenances in the right of way without the written permission of the Department.

3. The permittee shall furnish all material, labor, and equipment involved in the construction of the approach and its appurtenances. This shall include furnishing drainage pipe of a size specified on permit (12-inch minimum), curb and gutter, concrete sidewalk, etc., where required. Materials and workmanship shall be good quality and are subject to inspection by the Department.

4. The Department reserves the right to make at any time such changes, additions, repairs and relocations to any approach or its appurtenances within the highway right of way as may be necessary to permit the relocation, reconstruction, widening, and maintenance of the highway and/or to provide proper protection to life and property on or adjacent to the highway.

5. Driveways and rural approaches shall conform to the plans made a part of this permit. Adequate drawings or sketches shall be included showing the design, construction requirements and proposed location of the approach by route, station, and milepost.

6. The Department may change, amend or terminate this permit or any of the conditions herein enumerated if permittee fails to comply with its provisions or requirements as set forth hereon.

7. During the construction of the approach(es), such barricades, signs, and other traffic control devices shall be erected and maintained by the permittee as may be deemed necessary by the Department, said devices shall conform to the current issue of the Manual on Uniform Traffic Control Devices for Streets and Highways. Parked equipment and stored materials shall be as far from the travelway as feasible. Items stored within 30 feet of the travelway shall be marked and protected.

8. In accepting this permit, the permittee, its successors, and assigns, agrees to indemnify, save harmless and defend regardless of outcome, the state from the expenses of and against suits, including costs, expenses and attorney fees that may be incurred by reason of any act or omission, neglect or misconduct of the permittee or its contractor in the design, construction, and maintenance of the work, which is the subject of this permit.

9. If the work done under this permit interferes in any way with the drainage of the state highway, the permittee shall wholly and at his own expense make such provision as the District Engineer may direct to the care of said drainage.

10. On completion of said work herein contemplated, all rubbish and debris shall be immediately removed and the roadway and roadside shall be left neat and presentable and to the satisfaction of the District Engineer.

11. The permittee shall maintain at his or their sole expense the structure or object for which this permit is granted in a condition satisfactory to the District Engineer.

12. Neither the acceptance of this permit nor anything herein contained shall be construed as a waiver by the permittee of any rights given it by the constitution or laws of the State of Idaho or of the United States.

13. No work shall be started until an authorized representative of the Department has given notice to the permittee to proceed.

14. The Department hereby reserves the right to order the change of location or the removal of any structures or facility(ies) authorized by this permit, said change or removal to be made at the sole expense of the permittee or its successors or assigns, unless such structure(s) or facility(ies) have been located pursuant to the special provisions of form DH-2111.

A PERMITTEE WHO HAS A PERMIT DENIED AT THE DISTRICT LEVEL MAY APPEAL THE DENIAL TO THE STATE HIGHWAY ADMINISTRATOR AND FINALLY TO THE IDAHO TRANSPORTATION BOARD.

BOISE STAFF REVIEW

REVIEW		Reviewer Initial	Recommendation Yes	Recommendation No*
Traffic				
Bridge				
Right of Way				

DISTRICT STAFF REVIEW

REVIEW		Reviewer Initial	Recommendation Yes	Recommendation No*
Traffic		DPC	✓	
Maintenance		[illegible]	✓	
Design		[illegible]	✓	
Right of Way				

*ATTACH REASON FOR RECOMMENDATION

Received 04-12-2022

Permit No. 02-01-134

1. This permit is issued for highway access only. Obtaining any other permits required by federal, state, or local agencies shall remain the responsibility of the permittee (i.e. water quality, cultural resources, wetlands, etc.).

2. In accordance with Idaho Code, Section 55.2207, the permittee is hereby notified there may be **underground facilities in the proposed work areas**, and that no excavations are permitted until the permittee has obtained utility locates and recommended precautions to observe during excavations.

3. The attached **SUGGESTED MINIMUM TRAFFIC CONTROL PLAN** is to aid the permittee in establishing safe traffic control through the work area. All traffic control devices shall comply with the *Manual on Uniform Traffic Control Devices for Streets and Highways.* Copies are available for review at the Idaho Transportation Department's district office and Maintenance Foreman stations. Failure to comply may result in the permit being revoked and possible civil penalties.

4. Permission to commence work must be obtained from Bud Converse, Maintenance Foreman at Moscow, telephone (208) 882-5125, at least two working days prior to start of construction.

5. Permittee must have this Right-of-Way Use Permit in possession at all times while working within the highway right-of-way. This permit shall be available for inspection by Idaho Transportation Department officials and the Idaho State Police upon request.

6. Upon completion of the guardrail installation, permittee shall notify the Maintenance Foreman and arrange for a final inspection of the work.

7. The permittee is to control the vegetation on both sides of the approach to maintain adequate sight distance.

RECEIVED
APR 1 2 2022
BY: .....

Z:\Admin\OM\WRDFILES\Traffic\specprov\0201134.doc

3

Received 04-12-2022

[illegible]

1. [illegible]

2. [illegible]

3. [illegible]

4. [illegible]

5. [illegible]

6. [illegible]

7. [illegible]

8. [illegible]

RECEIVED
APR 1 2 2022
BY: .....

[illegible]

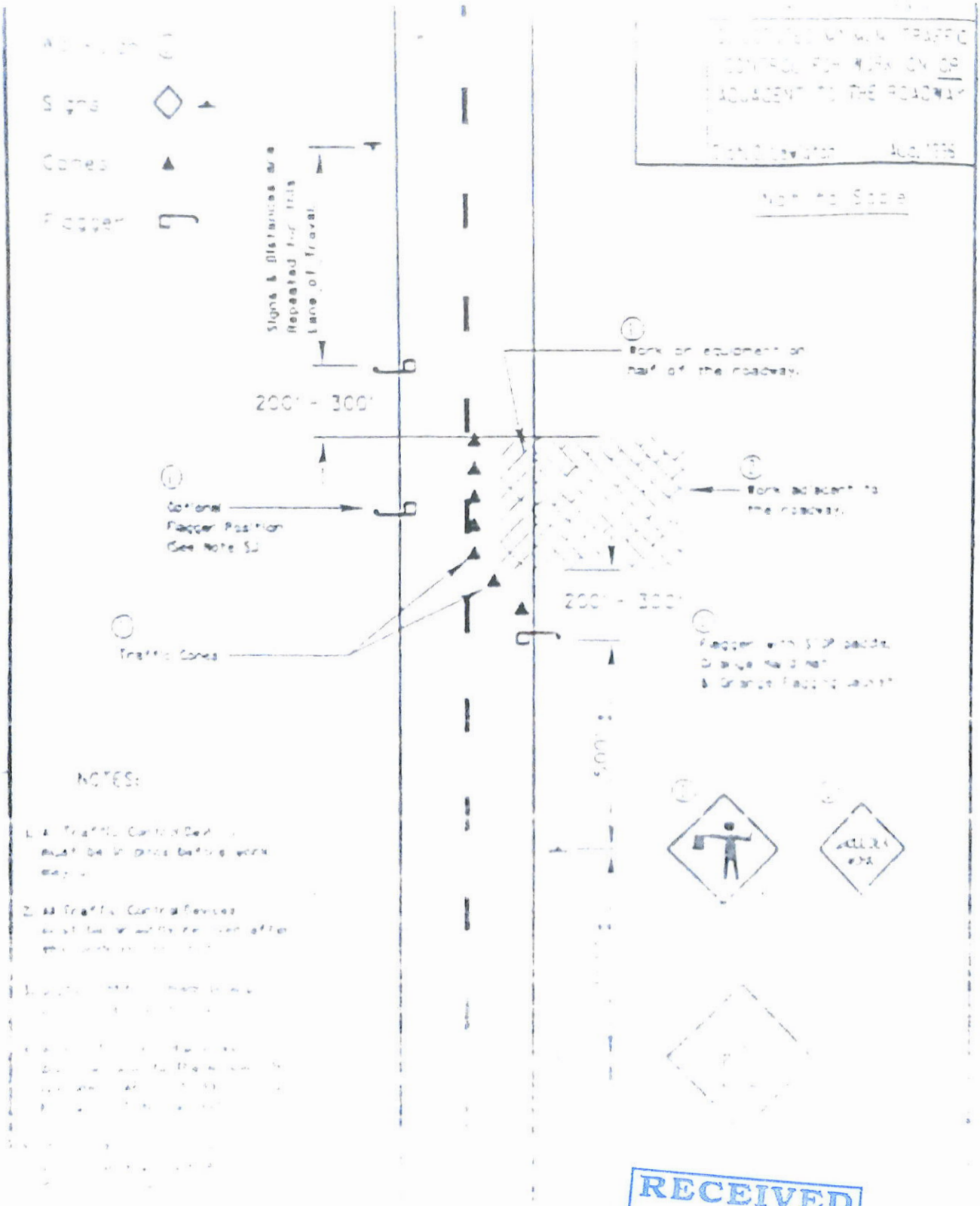

RECEIVED
APR 12 2022
BY: .....

LUP2022-0012

T 39 N R 5 W SEC 19
TX # 7450

QUIT CLAIM DEED

The Grantors, WILLIAM M. FELSTED and MICHAEL KAUFMAN d b a FELSTED & KAUFMAN, a partnership for and in consideration of the sum of One Dollar ($1.00) and other valuable considerations, in hand paid, do hereby [illegible] FELSTED AND KAUFMAN, L.L.C., whose [illegible] 83844 the following described [illegible] State of Idaho, to-wit:

A tract of land located [illegible] Township [illegible] North, Range [illegible] E.B.M., [illegible] described as follows:

Beginning at the South [illegible] thence N. 0° [illegible] thence S. 89° [illegible] of way line [illegible] OF BEGINNING; thence N. [illegible] way line; thence S. 89° [illegible] 367.94 feet, thence S. [illegible] W. 872.58 feet to the Easterly [illegible] way line [illegible] 95; thence N. 09°06'43" [illegible] feet [illegible] said right of way line to the TRUE POINT OF BEGINNING.

DATED this ____ day of [illegible]

William M. Felsted

Michael Kaufman

STATE OF IDAHO)
) ss.
COUNTY OF LATAH)

On this _____ of January, 1999, before me, the undersigned, a Notary Public in and for said state, personally appeared MICHAEL KAUFMAN, known to me to be the person whose name is subscribed to the foregoing instrument and acknowledged to me that he executed the same.

IN WITNESS WHEREOF, I have hereunto set my hand and notarial seal on the date last above written.

Notary Public for
Residing at:
My commission expires:

RECEIVED
APR 12 2022
BY: .....

6

Received 04-12-2022

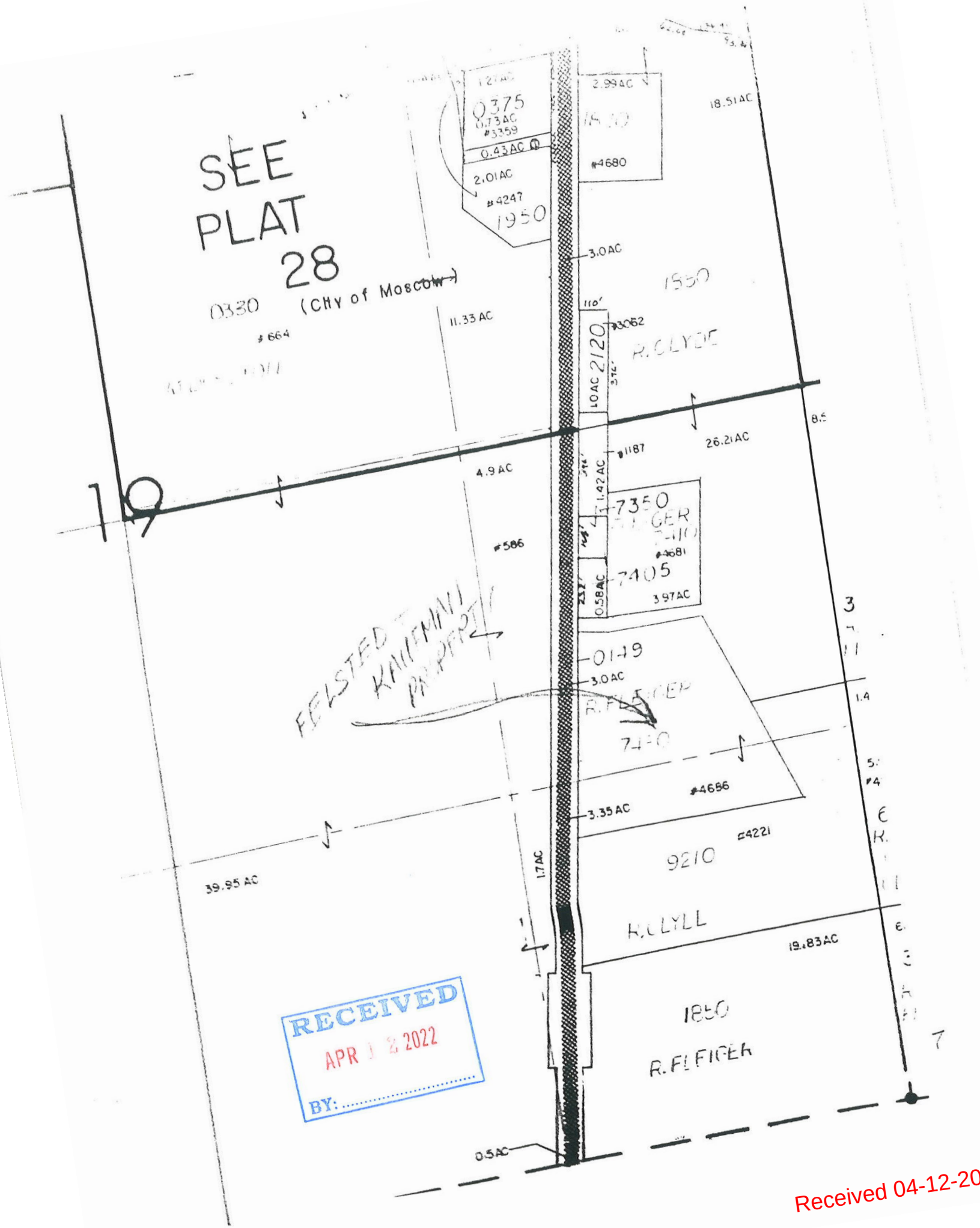

RECEIVED
APR 12 2022
BY: .....

Received 04-12-20

City of Moscow
Engineering Dept.

Memo

To: Aimee Hennrich

From: Todd Drage

CC:

Date: 5/25/2022

Re: ACI Storage Facility

Aimee,

The Engineering Department has reviewed the conditional use permit (CUP) application for the proposed ACI Storage Facility project located at 2730 S. US 95 and have the following recommendations:

1. As US HWY 95 will likely become city frontage with the completion of the Idaho Transportation Department's (ITD) Thorncreek Project, development of the Project would require the construction of frontage improvements per the City's Minor Arterial Standard. City recommends the completion of a Development Agreement stating that any additional development will require frontage improvements.

2. It looks like access will be from Highway 95 and there is an existing access approach. As this is currently Idaho Transportation Department right-of-way City recommends consultation with ITD the for an ITD2109 Permit (or to verify that one is not needed and the existing approach is acceptable for the proposed use.

Those are all of the comments that I have for this CUP Review.

CITY OF MOSCOW
COMMUNITY DEVELOPMENT DEPARTMENT
STAFF REPORT

HEARING DATE: Thursday, June 2, 2022

GENERAL INFORMATION

Hearing Body: Board of Adjustment

Subject: Amendment to the Conditional Use Permit at the Latah County Fairgrounds located at 1021 Harold Street to include seven additional (electricity only) Recreational Vehicle spaces within the Medium Density Residential (R-3) Zoning District per Moscow City Code 4-3-4.

Attachments:

1. Public Hearing Notice – Published in the Moscow-Pullman Daily News on Saturday, May 14, 2022
2. Conditional Use Permit Application
3. Application for Amendment to the Conditional Use Permit
4. Proposed Site Plan
5. Reasoned Statement of Relevant Criteria and Standards - 2008 SUP Approval
   a. Exhibit A – Uses and Allowances for Latah County Fairgrounds
   b. Exhibit B - Historical Uses of Latah County Fairgrounds
6. Relevant Criteria and Standards Worksheet

Prepared by: Aimee Hennrich, Planner I

STAFF REVIEW

Proposal: Latah County and the Latah County Fair Board, have requested an amendment, to the existing conditional use permit to include an additional seven (electric only) Recreational Vehicle spaces located at 1021 Harold Street within the Medium Density Residential (R-3) Zoning District. Fairgrounds were previously classified as a special use, but were reclassified in 2018 as part of an update the Zoning Code (Ordinance 2018-07). As part of that update, special uses were eliminated and many of the uses that were previously special uses were shifted to conditional uses.

Background Information: The most recent review of the uses at the fairgrounds was conducted on March 11, 2008 by the Board of Adjustment. Latah County and the Latah County Fair Board applied for a Special Use Permit (SUP) to extend the approval for uses of the Latah County Fairgrounds. The first request was that the Latah County Fairgrounds and the associated uses be approved indefinitely. The second request was to allow uses within the zoning district be allowed on the fairgrounds site without requiring an amendment to the SUP. The third request was to allow an expansion to the exhibit building for county office uses. (See attached Relevant Criteria and Standards from 2008.)

Correspondence from 1982 indicates that certain uses existing on the fairgrounds from before 1971 are considered to be nonconforming uses and are allowed to continue provided they do not cease. The use of recreational vehicles is included as one of the nonconforming uses. Documents from 1989 indicate that consideration was given at that time for an application to allow uses of the fairground property that did not exist prior to 1971. However, it appears application was not made until 1992.

1992 SUP Application. P&Z held a hearing on February 26, 1992 to consider an application for the uses conducted on fairgrounds property. The minutes established that Harold Street is a fire lane that should not be blocked; the fair is a nonconforming use and recreational vehicle (RV) uses associated with the fair are a nonconforming accessory use to the fair; parking should be required for all uses except the fair; and lighting shall be oriented away from residential uses. The application was approved for a two (2) year period and the application language was amended according to the P&Z's wishes to reflect the decision.

1994 SUP Application. The application request proposed was substantially similar to the 1992 application with the change that the definition of an outdoor event was expanded. P&Z held a hearing on January 26, 1994 and approved the application for three (3) years.

1999 SUP Application. Although expired for two (2) years, the application request proposed was unchanged from the 1994 application. The minutes show that discussion revolved around concerns with the RV uses of the fairgrounds and P&Z approved the application for one (1) year after a hearing conducted on May 26, 1999.

2000 SUP Application. An application was submitted to add an ice rink facility to the fairgrounds. Because the SUP for the uses of the fairgrounds had expired earlier in the year, consideration of this matter was included as a courtesy. P&Z held a hearing on the matter on December 13, 2000 and the application was approved for three (3) years from the previous expiration date (May 26, 2000) based upon the 1992 approval.

2003 SUP Application. Application was made for consideration of the uses of the fairgrounds, including the ice rink. The request was substantially similar to the 1999 application with the extension of one (1) to two (2) extra days for specific uses and the addition of two (2) RV hook-ups. P&Z held a hearing on May 14, 2003 and approved the fairground uses for five (5) years while separating the ice rink use and approving it for one

(1) year. Five (5) conditions were place upon the approval, including the improvement of the parking.

The current application is to add the additional seven (7) electric only recreational vehicle spaces to the southeast portion on the fairgrounds. All other uses that were included as part of the prior approvals will remain the same.

Aerial

Zoning: The subject property is located within the Medium Density Residential (R-3) Zoning District. According to the Zoning Code 4-2-4(F): *"The R-3 Zoning District provides for an increase over the density allowed by the R-2 zoning district by permitting different types of housing construction. It is appropriate where activity levels are moderate, terrain permits construction of somewhat larger structures, and where public systems and neighborhood facilities can accommodate a greater intensity of land use as guided by the Comprehensive Plan."*

Zoning Map

Site and Area Land Use: Latah County Fairgrounds property, a parcel 634,408 square feet in size, and is generally bound by Harold Street to the north, Mountain View Road to the east, White Avenue to the south and Blaine Street to the west. The site includes multiple structures including exhibit buildings, Grange building, restrooms, ice rink, livestock barns, and an auction barn. There are hook-ups for five (5) RVs, playground, baseball field and basketball court at the southwest portion of the site and a riding arena near the eastern portion of the site. Open grassy spaces with benches, picnic tables, and trash receptacles are located throughout the site which is generally level with some minor slopes. The proposed (electric only) Recreational Vehicle, would be located on the parcel adjacent to Fire Station II Training Facility.

The site is used for multiple and various events throughout the year. Uses include, but are not limited to election polling, club and group meetings and events, auctions, workshops and classes, and trade fairs or shows.

Adjacent properties to the north, west and south are mostly residential uses also in the R-3 Zone. Although similar public service uses are located in the general vicinity (such as the National Guard Armory, Latah County Highway District, and Fire Station II Training Facility). Beyond the immediate areas to the north, east, and west, are residential uses located within the Low Density and Moderate Density Single Family Residential (R-2 and

R-3) Zones. To the south, beyond White Avenue is a Motor Business (MB) Zoning District where a variety of commercial uses are located, including the Eastside Marketplace Mall.

RV Park Standards:
Size of RV Spaces: The minimum space size within an RV Park shall be 40' x 20'; however, up to forty percent (40%) of the spaces may be a minimum of 25' x 20'. The applicant has indicated that the majority of the spaces within the existing park are 20' wide by 50' in depth, which exceed the minimum required.

Separation: Design of spaces shall be such that minimum space between recreational vehicles is ten feet (10'). The proposed spaces will have at least 10' of clearance between adjacent RV's.

Sanitary Facilities: Toilet facilities and potable water shall be provided in all campgrounds and in all recreational vehicle parks that allow tents or recreational vehicles which are not self-contained. The applicant is not proposing to have any RVs that are not self-contained, so this standard does not apply.

Open Space: Common open space will be provided for each space in the park. This area shall be exclusive of all setback areas and shall be developed with turf and trees. The size of the open spaces shall be left to the discretion of the developer. There is currently open space in the north of the proposed location on site as well as ample space on the southwest corner near the intersection of Blaine and White Avenue.

Refuse: Trash receptacles shall be provided, and shall be located no further than one hundred fifty feet (150') away from any recreational vehicle or campground space. Each RV space will be no more than one hundred and fifty feet away from any trash receptacle.

Streets: Internal private streets shall be a minimum of twenty-eight feet (28') (including a 20 foot surface and 4 foot shoulders) in width for two-way streets and twenty feet (20') (including a 12 foot surface and 4 foot shoulders) for one-way streets, with a minimum of three-quarters inch (3/4") processed rock, six inches (6") in depth. Minimum outside radius of all curves in streets shall be forty feet (40'). The site plan shows an internal private road that meets these requirements.

Utilities: All recreational vehicle parks and campgrounds with access to City sewer and/or water shall be served by such. These RV spaces are proposed to be electric only.

Proposed Location

Streets and Access: The RV spaces would be accessed from White Avenue, the main access to the fairgrounds site. There is a service road which provides access to the fairgrounds and the ice rink facility off of Mountain View Road. The site plan shows an internal private street north of the proposed RV sites that would exit back out to the service road. There is a vehicle approach from Harold Street near one of the fairgrounds buildings. Both White Avenue and Mountain View Road are designated minor arterial streets, Blaine Street is designated a collector street, and Harold Street is designated a local residential street.

Comprehensive Plan: Chapter 2 of the Comprehensive Plan, Land Use and Community Character, designates the subject property's existing land use character as Public/Semi-public. An objective of the Land Use and Community Character Section 2.7.7 is to provide a continuum of land uses that allow a variety of uses and housing to meet the needs of the community while ensuring the preservation of neighborhood character.

A goal of Chapter 4, Parks, Recreation and Open Space is, "To provide a system of well-distributed parks, open space, recreational facilities that meet the active and leisure recreation needs of the citizens of all ages, interests and abilities".

Input from other Departments/Agencies: No comments were received from other departments/agencies upon review of the request.

Other Considerations:

RELEVANT CRITERIA AND STANDARDS

The following are Staff's comments relating to the criteria required for approval of a Conditional Use Permit. See the attached worksheet for each of the criteria. The following statements may be used for the Relevant Criteria and Standards or changed to include or remove any statement deemed necessary or appropriate by the Board.

1. The proposed use (is/is not) a conditionally permitted use within the Zoning District.

2. The character of the proposed use (will/will not) be in harmony with the neighborhood and surrounding land uses.

3. The proposed use as approved, or as approved with conditions, (will/will not) generate nuisances that would be injurious or detrimental to the adjoining properties or the neighborhood (including, but not limited to, noise, dust, glare, vibrations, odors, and the like).

4. The location, design, and size of the proposed use (will/will not) be adequately served by existing streets, public facilities and services.

5. The proposed use (will/will not) endanger the public health or safety if located where proposed.

6. Proposed use (meets/does not meet) all applicable development standards of the Zoning Code.

7. The proposed use (will/will not) be in conflict with the Comprehensive Plan.

RECOMMENDATION FOR CUP APPLICATION

The Board has the option to approve, approve with conditions, or deny the application subject to the Relevant Criteria and Standards and any public testimony provided at the public hearing. The board may also table the decision for the application in order to request more information, including studies of social, economic, fiscal and environmental effects of the proposed Conditional Use Permit.

The Board of Adjustment may impose conditions including, but not limited to those 1) minimizing adverse impact on other development; 2) controlling the sequence and timing of development; 3) controlling the duration of development; 4) assuring that development is maintained properly; 5) designating the exact location and nature of development; 6) requiring the provision for on- or off-site public facilities or services; 7) requiring more restrictive standards than those generally required in an ordinance; and/or 8) requiring mitigation of effects of the proposed development upon service delivery by any political subdivision, including school districts, providing services within the planning jurisdiction.

Staff recommends **approval** of the amendment to the Conditional Use Permit to include seven additional (electricity only) Recreational Vehicle spaces at the Latah County Fairgrounds located at 1021 Harold Street with no conditions.

In accordance with the Board's decision, direct staff to prepare the Relevant Criteria and Standards document.

NOTICE OF PUBLIC HEARING

Proposal for an Amendment to an Existing Conditional Use Permit at 1021 Harold Street
Permit Application LUP2022-0010

A public hearing at which you may be present and speak will be conducted before the Board of Adjustment of the City of Moscow at which time the following proposal will be considered:

> Amendment to the Conditional Use Permit at the Latah County Fairgrounds located at 1021 Harold Street to include seven additional (electricity only) Recreational Vehicle spaces within the Medium Density Residential (R-3) Zoning District per Moscow City Code 4-3-4.

HEARING DATE: Thursday, June 2, 2022

HEARING LOCATION: Council Chambers on the Second Floor of Moscow City Hall
206 East Third Street, Moscow, Idaho

MEETING TIME: 7:00 pm

Note: Meeting start time is not necessarily indicative of hearing start time for the proposal advertised in this notice. Multiple hearings and/or agenda items may make it difficult to determine hearing start time, which could occur late in the meeting.

The file containing information on this matter is available for public review at the Community Development Department located in the Haddock Building at 504 S Washington Street, Moscow, Idaho. Call 883-7035 for a meeting agenda and further information about the matter.

Verbal testimony at the hearing is generally limited to three (3) minutes time. Minor amounts of written materials (less than two (2) pages) may be submitted to the hearing body at any time prior to the close of comments, as determined by the hearing body. More in-depth written materials require at least five (5) calendar days for review prior to the hearing. You may obtain further information about the public hearing process and procedures on the City's Website at: http://id-moscow.civicplus.com/593/Public-Hearing-Notices

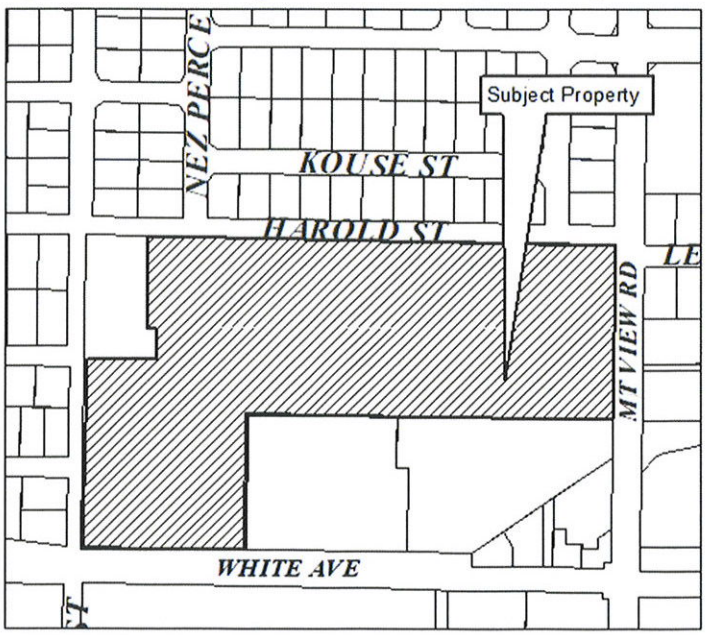

Laurie Hopkins, Moscow City Clerk

Jennifer Fleischman, Deputy Clerk

Publish: Saturday, May 14, 2022

CITY OF MOSCOW
COMMUNITY DEVELOPMENT
Ph: 208-883-7035
Fax: 208-883-7033
504 S. Washington Street
jfleischman@ci.moscow.id.us

For City Use Only			
	Date Received	3/29/22	
Dept	Fee Type	Fees	Paid
CDV	Application Fee	$525.00	3/29/22
	Receipt Number	LUP2022-0010	

RECEIVED
MAR 29 2022
BY: .....

APPLICATION FOR CONDITIONAL USE PERMIT

(Please type or print plainly with blue ink.)

GENERAL INFORMATION

1. **Applicant**

Name: Latah County Telephone: 208-883-5722

1021 Harold Moscow ID 83843
(home address)

Relationship to affected property (please check one):

Owner ■ Purchaser ☐ Lessee ☐ Other ☐ (explain below)

2. **Owner of Affected Property** (if other than applicant)

Name: _____ Telephone: _____

_____
(home address)

3. **Location of Affected Property**: Latah County Fairgrounds 1021 Harold

Legal Description: _____ (subdivision) _____ (block) _____ (lot)

If described by Metes and Bounds, please attach deed on a separate sheet.

4. **Proposal**: The applicant proposes the following use and/or construction for the above-described property:
The Latah County fairgrounds is seeking to amend their existing conditional use permit to allow an additional eight (8) electric only RV spots for the primary purpose of facility users and short term rentals not to exceed 14 consecutive days. The proposed RV spaces will in compliance with Title 6 Chpt 3

The proposed activities and use shall be shown on an attached site plan drawn to a standard engineer's or architect's scale. The site plan shall show, label and dimension all property lines and easements, existing and proposed buildings, parking lot and driveway(s), fencing and landscaping. A site topography map shall be provided when appropriate.

5. **Authorization**: Section 3.4 of the Moscow Zoning Ordinance authorizes the proposed use, subject to a Conditional Use Permit.

Received 03-29-2022

6. **Operating Characteristics**: Detail the operating characteristics of the proposed use. In other words, provide specific information which describes and defines how the proposed use will be conducted and what will be involved in the day to day operations of the proposed use. Applicable information may include hours of operation, number of people (employees, customers, students, etc.) involved, traffic and/or delivery information, services provided, equipment or machinery which may be involved, or any other information which helps describe and define the proposed use and impacts which it may have.

Latah County currently has five full service RV spaces with additional approval to allow groups for up to 21 days per year these are often parked around building which hinders other uses. These designated spaces would provide organized use of a field area that sits vacant and is often used by unpermitted users. The site will be manned by the Fair and Event Center staff and serviced by a one way Lane. Please see attached RV Park rules.

7. *Before the Moscow Board of Adjustment may issue a Conditional Use Permit, the Board must first make findings of compliance with the following seven relevant criteria and standards. Please indicate in the spaces provided below what you believe to be justification showing compliance with each of the relevant criteria and standards.*

Criteria #1. THE PROPOSED USE IS A CONDITIONALLY PERMITTED USE WITHIN THE ZONING DISTRICT.

Justification and compliance with criteria #1: Fairgrounds are a Conditionally Permitted Use. This application is to amend the current SUP/CUP to include additional designated spaces.

T The permitted

RV spaces have been permitted since 2008.

Criteria #2. THE CHARACTER OF THE PROPOSED USE WILL BE IN HARMONY WITH THE NEIGHBORHOOD AND SURROUNDING LAND USES.

Justification and compliance with criteria #2: The fairgrounds use has operated in harmony with adjacent properties since 1971 and prior. The layout of the buildings, continued maintenance improvements and building upgrades as well as fencing and landscaping provide a park like setting.

The Fair and Event Center is utilized by local and regional organizations, private citizens, government entities and youth.

Criteria #3. THE PROPOSED USE AS APPROVED, OR AS APPROVED WITH CONDITIONS, WILL NOT GENERATE NUISANCES THAT WOULD BE INJURIOUS OR DETRIMENTAL TO ADJOINING PROPERTIES OR THE NEIGHBORHOOD (INCLUDING BUT NOT LIMITED TO NOISE, DUST, GLARE, VIBRATIONS, ODORS AND THE LIKE).

Justification and compliance with criteria #3: The grounds are staffed by four employees and have oversight by both the fairboard and Board of County Commissioners. As staffing has increased the uses and users have been held to more stringent rules, regulations, and contracts; all of which aim to limit and nuisance.

Specifically, the rv park users must comply with all grounds policies and the rules of the RV park. No nuisances will be generated by the proposed use.

Criteria #4. THE LOCATION, DESIGN, AND SIZE OF THE PROPOSED USE WILL BE ADEQUATELY SERVED BY EXISTING STREETS, PUBLIC FACILITIES AND SERVICES.

Justification and compliance with criteria #4:

Per the attached plans the proposed use will meet all rv space, road surface, and open space requirements. The total acreage of the site is just over 14 acres with frontage on Harold, Mt View, White and Blaine RV's will access from White Ave and exit via either Mt. View or White ave. The use is approx .6 acres.

Received 03-29-2022

Criteria #5. THE PROPOSED USE WILL NOT ENDANGER THE PUBLIC HEALTH OR SAFETY IF LOCATED WHERE PROPOSED.

Justification and compliance with criteria #5:

The proposed amendement will not effect public health or safety an may in fact increase public health as it provides more opportunity for recreation. This project is being supported by the Idaho Dept of Parks and Recreation

Criteria #6. THE PROPOSED USE MEETS ALL APPLICABLE DEVELOPMENT STANDARDS OF THE ZONING CODE.

Justification and compliance with criteria #6:

The engineered plans meet all applicable RV standards and floodplain standards.

Criteria #7. THE PROPOSED USE WILL NOT BE IN CONFLICT WITH THE COMPREHENSIVE PLAN.

Justification and compliance with criteria #7: Not only is the proposed use not in conflict with the comprehensive plan it fully supports it:

Invest in the community's livability and quality of life to contribute to its economic development and attractiveness as a place to live and conduct business.

Contribute to a healthful community life through provision of opportunities for sport and exercise. [

□mprove the quality and appearance of public spaces to form a positive and desirable image of Moscow. [

CONDITIONS OF APPROVAL

The Board of Adjustment may impose conditions including, but not limited to, those (1) minimizing adverse impact on other development; (2) controlling the sequence and timing of development; (3) controlling the duration of development; (4) assuring that development is maintained properly; (5) designating the exact location and nature of development; (6) requiring the provision for onsite or offsite public facilities or services; (7) requiring more restrictive standards than those generally required in an ordinance; and/or (8) requiring mitigation of effects of the proposed development upon service delivery by any political subdivision, including school districts, providing services within the planning jurisdiction.

COMPLIANCE

1. In the event of failure to comply with the plans proof by the Board of Adjustment, or with any conditions imposed upon the Conditional Use Permit, the permit shall be immediately revoked and shall be automatically null and void.
2. Where plans are submitted and approved as part of the application for a Conditional Use Permit, modifications of the original plans may be required by the Board as a condition of approval.
3. Where plans approved by the Board of Adjustment are modified following such approval, such plan modifications must be submitted to and determined by City staff to be in substantial conformance with the plans approved by the Board. If plan modifications are not in substantial conformance, the plan modifications must be resubmitted to the Board for an additional public hearing as an amendment to the Conditional Use Permit application.

Received 03-29-2022

REVOCATIONS

If a Building Permit and/or Certificate of Occupancy pertaining to the Conditional Use Permit is not obtained for the subject property within one year from the date of the Board of Adjustment's final decision, the Conditional Use Permit shall be immediately revoked and shall be automatically null and void. If the use and/or occupancy for which the Conditional Use Permit is approved ceases for a period of twelve consecutive months, unless otherwise provided for in the Conditional Use Permit, then the Conditional Use Permit shall be immediately revoked and shall be automatically null and void.

Application Submittal:

This application must be completed and submitted with the below described items to the Moscow Community Development Planner I at least twenty-one days prior to the hearing at which the application is to be considered by the Board.

The following items must be submitted with this application before it will be processed:
1. Application Fee
2. Site Plan, drawn to scale
3. Floor Plans, drawn to scale
4. Elevation Drawings, drawn to scale (for new construction only)

I understand this information is a public record and may be posted to a public website.

James S. Fogus, Fairgrounds Director — 3/29/2022
Applicant's Signature — Date

[illegible] — 3/28/22
Owner's Signature — Date

RECEIVED
MAR 29 2022
BY: .....

Received 03-29-2022

Latah County
RV Park

General Rules

- Observe and obey all posted signs throughout the Latah County Fair and Event Center property.
- Please respect guest's privacy by not walking through occupied sites or interrupting events.
- All waste disposal hookups must be sealed with all hoses and connections free of leaks.
- Trash should be placed in provided cans, if cans are full please place in dumpster at south end of Event Center. No large or bulk items.
- Please keep your campsite area neat and organized.
- ONLY one recreational vehicle per site.
- ONLY 2 cars per site.
- Maximum of 6 persons per site and no more than 4 adults per site.
- Electric only spaces are limited to 14 days.
- No motorized vehicles on the grass.
- Quiet time is 10:00 p.m. to 8:00 a.m.
- Fair management reserves the right to close the RV Park for Events throughout the season.
- Water will be shut off during cold weather months.
- Payment is expected at the start of your stay

CODE OF CONDUCT & POLICIES

- Smoking (Strict Enforcement) permitted at individual sites only. No smoking in and around buildings and barns.
- All guests should be courteous to other guests; ensuring noise levels are acceptable even during the day. Loud music is not permitted at any time. RV owners shall be responsible for the conduct of their family members, guests and/or visitors while at the RV Park. RV owners, their family members, guests or visitors who create a disturbance or behave in a manner that constitutes a threat or substantial nuisance to other Fair and Event Center guests will not be allowed to remain on the property.
- Please do not flush anything in toilets other than toilet paper.
- Please do not tamper with the landscaping, electric or plumbing systems.
- No soliciting, peddling, loitering, trespassing, or trading allowed on the park.
- No criminal or drug related activity on or near the Fair and Event Center property will be tolerated.

PROHIBITED

- Tents, Carpets or Tarps on grass
- Pools, Hot Tubs
- Perimeter fencing/pet fences or pet pens
- Clotheslines
- Indoor Furniture
- Open Trailers
- Affixing to Trees
- No ATV's/ Mini Bikes/ Go Carts or Side by Sides
- Fireworks/firearms/bow and arrows/ pellet guns
- Hazardous materials
- Fairgrounds personnel will periodically inspect sites to assure compliance with rules.

RECEIVED
MAR 29 2022
BY: .....

Received 03-29-2022

RV POLICY

- All recreational vehicles must be currently registered and maintained in good condition and in running order.
- Fair management must approve any RV 25 years and older prior to parking.
- No RV deemed to be in "poor" condition (e.g., broken or cracked windows, flat tires, rusted, badly dented, or in need of paint) will be allowed in the RV Park.
- Approved recreational vehicles include: Class A, Class B and Class C Motorhomes, Fifth wheels, hard sided Travel Trailers, Pop up Trailers and Toy Haulers.
- All RV's must be leveled and supported with the proper equipment.

VEHICLE POLICY

- Management is not responsible for damage, injury, or loss to either person or property. Latah County Fair and Event Center absolves themselves from all liability and responsibility pertaining to loss by fire, theft, weather, acts of God, property damage, accident or any other cause whatsoever, and guest agree to save, protect and hold harmless Latah County Fair and Event from all such liability.
- Automobiles and RV's must park in designated parking areas. TWO (2) motorized vehicles/ or TWO (2) motorcycles are allowed per site; the vehicle(s) may not infringe on adjacent sites or grass areas.
- RV's, automobiles and motorcycles must be currently registered, in good running order and operated by a licensed driver. Issues such as flat tires, dead battery, leaks, broken windows or is deemed to be in general poor condition, including exterior, may not be parked within the RV Park.
- All vehicle repairs, maintenance (e.g., oil changes, lubes, etc.), and washing RVs are prohibited.
- All posted traffic signs must be obeyed, and the speed limit is 5 mph and is strictly enforced.
- No boat, utility, storage or auto trailers may be parked in the RV Park without Management approval. Vehicles in violation of these rules will be towed at the owners' expense.
- ATV's, Side-by-Side's, Minibikes are prohibited from Fairgrounds premises.

OUTDOOR LIVING SPACE

- Only customary outdoor patio/lawn furniture and accessories may be left outside.
- Outdoor carpets are not permitted on grass areas.
- Please do not remove picnic tables from their sites.
- Please close awnings, canopies and umbrellas when RV is unattended. Strong winds can cause serious damage or loss of property.

CUSTOMER RESPONSIBILITY

- Any customer or guest destroying/damaging park or other customer's property will be required to make restitution. If your RV has an electrical problem creating a problem with the park electric and a certified electrician has to be called, you will be responsible for the cost of the electrician's service call and damages.
- Guests shall not make any alteration to the electric, water or sewer connections provided.
- The Fair and Event Center responsibility shall extend only to the point of connection and the Park shall not have any responsibility for the condition or functioning of any pipes, conduits or wires from such point of connection to the guest's RV. Wastewater must be disposed of properly; no dumping on the ground. Please use the appropriate sewer connection.
- The Park reserves the right to disconnect utilities in order that repair, alterations or additions may be made. Guests will be notified, when possible, of any planned utility system shutdown.
- The Fair and Event Center shall not be responsible for any loss suffered by any guest from planned, unplanned, or emergency shutdowns.

CHILDREN

- Parents are responsible for the whereabouts, safety and conduct of their children at all times so keep an eye on them please. All minors must have adult supervision at all times.

WHEELED TOYS

- Bicycles/skateboards/roller skates must be operated with extreme caution and adult must supervise minors while operating on premises.

PET RULES

- Pets are welcome and must be kept on a leash or confined to the RV owner's site at all times.

Received 03-29-2022

- We do not allow any pens, fences or kennels in the park.
- Please do not leave your pets unattended or exposed to the environment.
- All pet waste is to be cleaned up as soon as deposited, including the RV owner's site. This is a health issue and if you do not comply you will be asked to vacate the Park.
- If your pet shows aggressive behavior, you will be asked to remove the animal from the park.
- Pets must be on leashes (maximum 10') when outside of RV's.
- Pets must be accompanied by an adult (over 12) when outside of the RV.
- The pet owner is solely responsible for any damage done to persons or property by the pet.
- Only pets that belong to registered RV guests are allowed on property.
- Wildlife/farm animals are not considered pets and not allowed.

FIRE SAFETY

- Fire safety is of the utmost importance at the RV Park. No campfires are allowed in the Park. A fire extinguisher must be available in the RV.
- Allowed: LP Gas for BBQ's, fire pits (contained with screen) or heaters. When not in use, such equipment must be placed back in storage.
- Prohibited: Open flame equipment (not allowed)
- All public laws and ordinances shall be obeyed within the RV Park.

DAMAGES

- The Guest is responsible for all damage or destruction of property, and any injury to persons, caused by the guest or his or her family, visitor, or pets.
- The Park reserves the right to charge guests accordingly for any damage they cause to the grounds and/or Park facilities, including but not limited to broken waterlines, damaged/missing sewer connections, landscaping, and excessive debris (bottle caps, zip ties, cigarette butts, etc.)

Any questions, please contact the
Latah County Fairgrounds and Events Center Office at
(208) 883-5722 or email fair@latah.id.us

www.latahcountyfair.com

RECEIVED
MAR 29 2022
BY: .....

Received 03-29-2022

LUP2022-0010

LATAH COUNTY FAIRGROUNDS RV PARK

CITY OF MOSCOW
LATAH COUNTY, IDAHO

BASIS OF ELEVATION

THE BASIS OF ELEVATION FOR THIS SURVEY IS NAVD88, ESTABLISHED BY GPS. THE BASE POSITION BEING CORRECTED BY NGS ONLINE POSITIONING USER SERVICE (OPUS).

DRAWING INDEX

Sheet Number	Sheet Title
C1	COVER SHEET
C2	EROSION CONTROL AND GRADING PLAN
C3	PLAN AND PROFILE
C4	UTILITY LAYOUT PLAN
C5	GENERAL NOTES AND DETAILS
C6	FAIRGROUNDS OVERVIEW

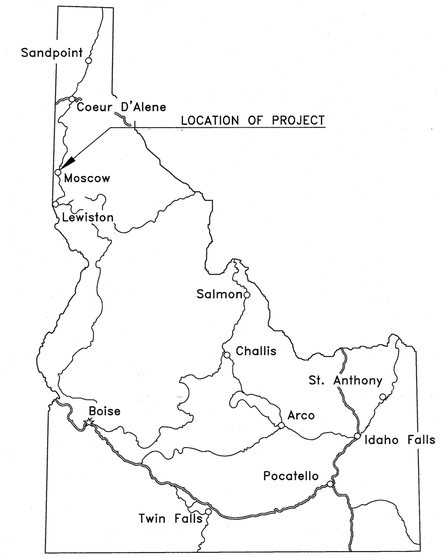

811 Know what's below. Call before you dig.

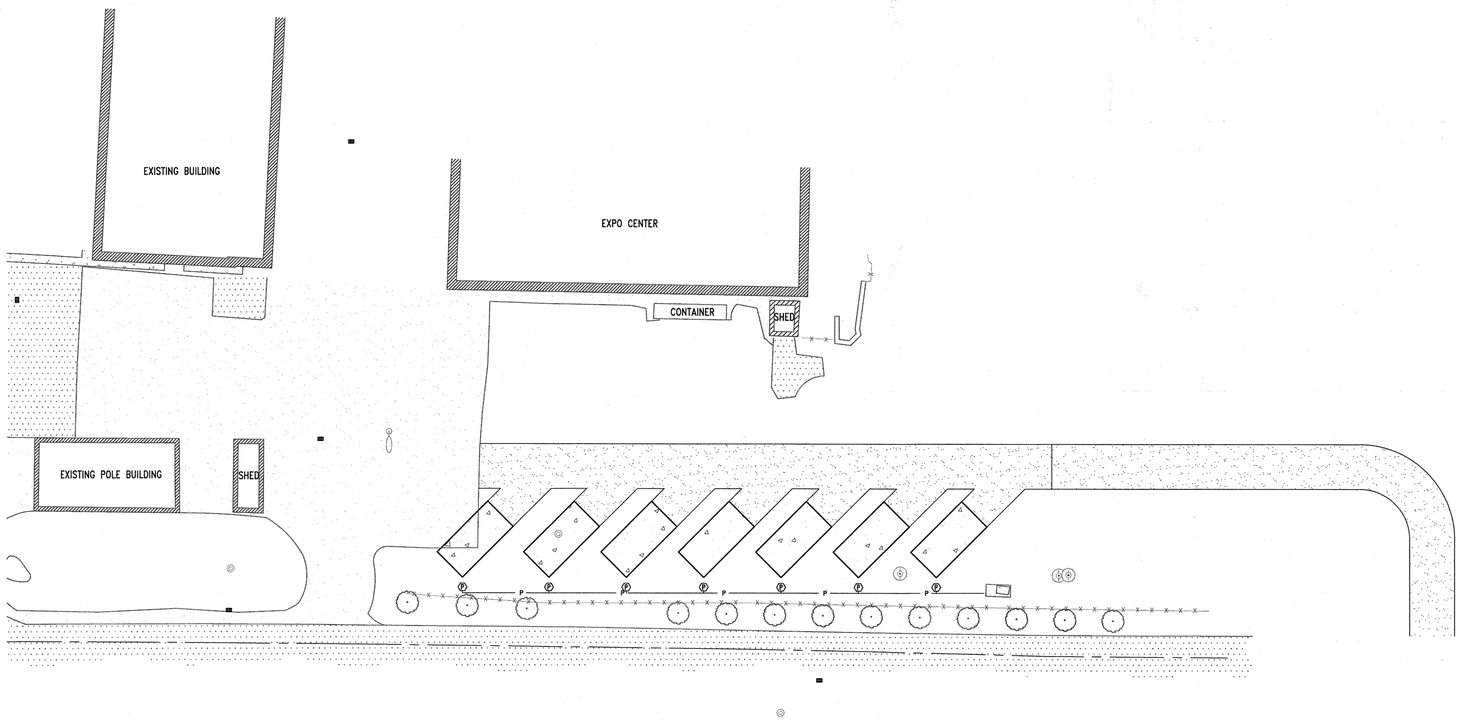

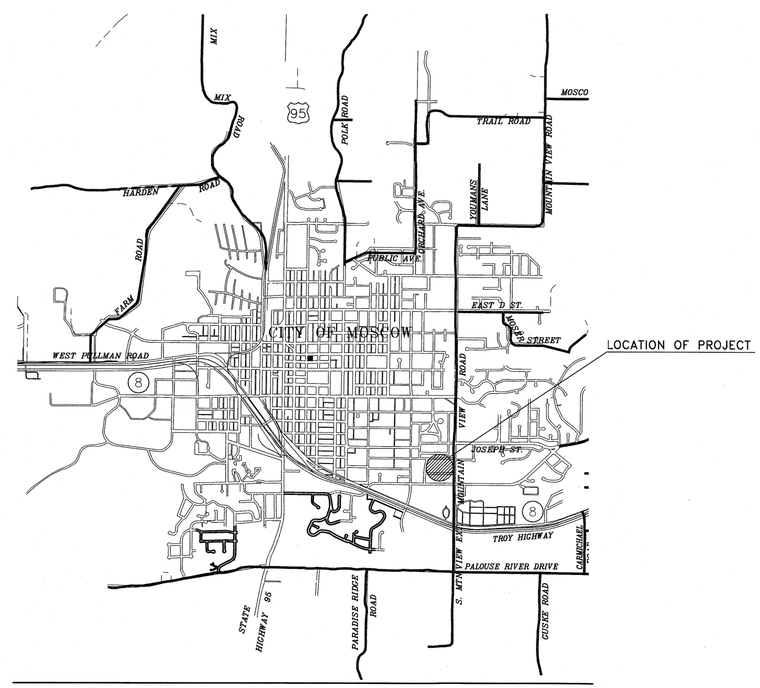

VICINITY MAP

Hodge & Associates, Inc.
Engineers • Planners • Landscape Architects
P.O. Box 8728
403 S. Washington Street
Moscow, Idaho 83843
(208) 882-3520

PROFESSIONAL ENGINEER LICENSED 13384 4-19-2022 STATE OF IDAHO SCOTT BECKER

LATAH COUNTY FAIRGROUNDS RV PARK
COVER SHEET
LATAH COUNTY FAIRGROUNDS
1021 HAROLD AVE
MOSCOW, IDAHO
(208)-883-5722

Designed By:	SB
Drafted by:	DC
Checked by:	SW/SB
File Name:	4485 COVER.dwg
Tab:	COVER
Layer Style:	STANDARD
Plot Style	PRIMARY.CTB
Project:	4485-10-21
Date:	4/15/2022

C1

Received 04-19-2022

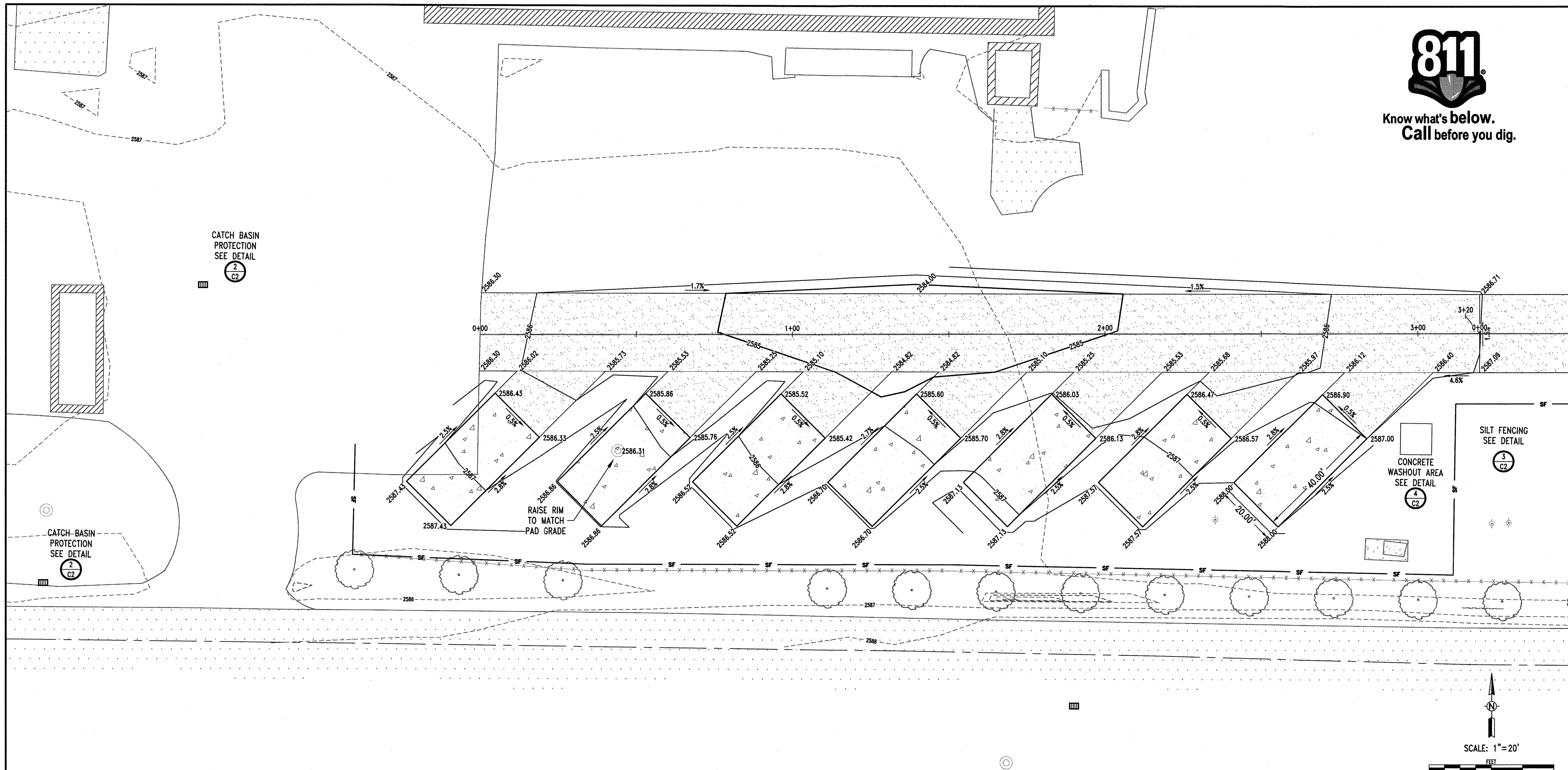

Know what's below. Call before you dig.

BASIS OF ELEVATION

THE BASIS OF ELEVATION FOR THIS SURVEY IS NAVD88, ESTABLISHED BY GPS. THE BASE POSITION BEING CORRECTED BY NGS ONLINE POSITIONING USER SERVICE (OPUS).

GRADING NOTES

ESTIMATED GRADING QUANTITIES

CUT VOLUME = 821 C.Y.

FILL VOLUME = 208 C.Y. (ASSUMES 22% SHRINKAGE DUE TO COMPACTION)

1. THIS PLAN IS ACCURATE FOR GRADING AND THE RELATED EROSION AND SEDIMENT CONTROL PURPOSES ONLY.
2. ALL AREAS TO RECEIVE EMBANKMENT (FILL) SHALL FIRST BE CLEARED AND GRUBBED.
3. ALL TOPSOIL SHALL BE EXCAVATED AND REMOVED FROM EMBANKMENT (FILL) AREAS. EXCAVATED TOPSOIL MATERIAL MAY BE STOCKPILED ON-SITE FOR USE AS LANDSCAPING MATERIAL – PROVIDE SILT FENCE AROUND STOCKPILES.
4. BORROW FOR EMBANKMENT (FILL) SHALL CONSIST OF NATIVE PALOUSE LOESS OR CLAY, OR ANY APPROVED GRAVELLY MATERIAL. ALL BORROW SHALL BE FREE OF ROOTS, BARK, TOPSOIL, ORGANIC OR OTHER DELETERIOUS MATERIALS.
5. COMPACT ALL EMBANKMENT (FILL) TO 95% MINIMUM OF THE PROCTOR VALUE DENSITY DETERMINED BY THE AASHTO T-99 METHOD. THE METHOD FOR CONSTRUCTING EMBANKMENT (FILL) SHALL BE SUCH THAT 95% MINIMUM DENSITIES ARE ACHIEVED THROUGHOUT.
6. WHERE EMBANKMENT (FILL) IS PLACED ON AN EXISTING SLOPE 4:1 OR STEEPER THE EXISTING SLOPE SHALL BE BENCHED HORIZONTAL PRIOR TO PLACING BORROW. THE WIDTH OF THE BENCHES SHALL NOT BE LESS THAN FIVE (5) FEET IN WIDTH.
7. COMPACTION TESTING SHALL BE PROVIDED BY THE OWNER. COMPACTION TEST LOCATIONS SHALL BE RECORDED ON A SITE PLAN SHOWING TEST NUMBER, DATE, AND ELEVATION OF EACH TEST. A REPORT OF THESE TESTS SHALL BE PROVIDED TO THE OWNERS, ENGINEER, CONTRACTOR, AND CITY. THERE SHALL BE A SUFFICIENT NUMBER OF TESTS TO ASSURE THAT 95% MINIMUM COMPACTION HAS BEEN ACHIEVED THROUGHOUT ALL EMBANKMENT (FILL) AREAS.
8. OWNER IS RESPONSIBLE TO SECURE ALL NECESSARY AUTHORIZATION FOR GRADING ACTIVITIES REQUIRED ON ADJACENT PROPERTIES.
9. A CITY OF MOSCOW GRADING PERMIT IS REQUIRED.
10. COMPLIANCE WITH NPDES PHASE II IS REQUIRED

EROSION CONTROL NOTES

1. EROSION CONTROL MEASURES AS SET FORTH IN THIS PLAN SHALL APPLY TO ALL CONSTRUCTION ACTIVITY RELATIVE TO THIS SITE, INCLUDING BUT NOT LIMITED TO, ALL EARTHWORK AND INSTALLATION OF PUBLIC IMPROVEMENTS.
2. SHOULD THE CITY ENGINEER DETERMINE THAT THE EROSION CONTROL MEASURES INSTALLED AS INDICATED ON THIS EROSION CONTROL PLAN ARE INADEQUATE AND/OR INEFFECTIVE, THE CITY ENGINEER SHALL DIRECT THE IMPLEMENTATION OF ADDITIONAL EROSION CONTROL MEASURES (AT THE EXPENSE OF THE DEVELOPER) TO ALLEVIATE INADEQUACIES.
3. THE OWNER AND/OR DEVELOPER OF THE PROPERTY IS ULTIMATELY RESPONSIBLE FOR THE FURNISHING, INSTALLATION AND MAINTENANCE OF ALL EROSION CONTROL MEASURES NECESSARY FOR FULL COMPLIANCE WITH MOSCOW CITY CODE.

IT IS NECESSARY FOR ANY PROJECT LARGER THAN ONE ACRE IN SIZE TO HAVE AN EPA NOTICE OF INTENT FOR STORMWATER DISCHARGES ASSOCIATED WITH CONSTRUCTION ACTIVITY UNDER AN NPDES GENERAL PERMIT (NOI PHASE II) FORM ON FILE WITH THE EPA STORM WATER NOTICE PROCESSING CENTER AT:

FOR REGULAR U.S. MAIL DELIVERY:
EPA STORMWATER NOTICE PROCESSING CENTER
MAIL CODE 4203M
U.S. EPA
1200 PENNSYLVANIA AVENUE, NW
WASHINGTON, DC 20460

FOR OVERNIGHT/EXPRESS MAIL DELIVERY:
EPA STORMWATER NOTICE PROCESSING CENTER
ROOM 7420
U.S. EPA
1201 CONSTITUTION AVENUE, NW
WASHINGTON, DC 20004

PRIOR TO CONSTRUCTION ACTIVITIES:

1. INFORM CITY, AND OTHER INSPECTORS, OF WORK SCHEDULED FOR WEEKENDS OR HOLIDAY.
2. CONSTRUCT GRAVEL PADS AT ENTRANCES TO SITE, AS INDICATED ON PLAN.
3. PLACE SILT FENCING AND CHECK DAMS AS INDICATED ON PLAN PRIOR TO ANY EXCAVATION OR EMBANKMENT WORK. IN GENERAL, CHECK DAMS SHALL BE PLACED AT MINIMUM 100 FOOT SPACING IN ALL SWALES AND DITCHES AND AT MINIMUM 50 FOOT SPACING ALONG SILT FENCE. ON SLOPES GREATER THAN 10% CHECK DAMS SHALL BE MADE OF ROCK, STRAW BALES, OR SILT FENCE, PER MOSCOW CITY STANDARDS.
4. GRADE ACCESS ROAD(S) TO ROADWAY CROSS-SLOPE TO PROVIDE DRAINAGE TO ROADSIDE DITCHES.
5. PLACE SILT FENCING AND STRAW BALES TO PROTECT EXISTING STORM WATER DRAINAGE FACILITIES THAT WILL BE IMPACTED BY THIS WORK. PROTECT EXISTING FACILITIES ON ADJACENT PROPERTY, AS NECESSARY. EXISTING CATCH BASINS SHALL BE PROTECTED PER DETAIL #, THIS PAGE. MAINTAIN UNIMPEDED FLOW INTO CATCH BASINS THROUGHOUT CONSTRUCTION.
6. CONSTRUCT TEMPORARY SEDIMENT POND(S) IN THE LOCATION(S) AS SHOWN ON THE PLAN, INCLUDING DIRECTIVE DITCHES ALSO AS SHOWN THEREON AND/OR OTHERWISE REQUIRED.

DURING CONSTRUCTION ACTIVITIES AND WINTER SHUTDOWN, AS NECESSARY:

1. SUSPEND ALL EXCAVATION AND EMBANKMENT WORK DURING RAIN STORMS TO MINIMIZE EROSION AND SEDIMENT IMPACTS. MONITOR SITE CONDITIONS DURING AND FOLLOWING RAIN EVENTS FOR EROSION AND SEDIMENT CONTROL PROBLEMS – INSTALL CORRECTIVE MEASURES AND INITIATE CLEANUP MEASURES AS REQUIRED.
2. SPRAY WATER ON DISTURBED AREAS TO CONTROL DUST EROSION DURING DRY SEASON.
3. CONSTRUCT STORM WATER FACILITIES AS EARLY AS POSSIBLE DURING CONSTRUCTION. PROTECT NEW STORM WATER FACILITIES SIMILAR TO EXISTING (SEE NOTE 5 OF "PRIOR TO CONSTRUCTION ACTIVITIES").
4. SEED AND MULCH ALL DISTURBED AREAS.
5. ALL GRADED AREAS, FINISHED OR UNFINISHED, SHALL HAVE ACCEPTABLE EROSION CONTROL MEASURES APPLIED PRIOR TO OCTOBER 1 – NO EXCEPTIONS WITHOUT PRIOR WRITTEN CITY APPROVAL. ACCEPTABLE EROSION CONTROL MEASURES SHALL BE CONSIDERED ONE OF THE FOLLOWING:
   a. HYDRAULICALLY APPLIED MIXTURE OF MULCH AND TACKIFIER – OF A TYPE AND APPLICATION RATE RECOMMENDED FOR MOSCOW AREA OPEN SOIL EROSION PROTECTION – SEED TO BE INCLUDED IF AREA IS FINISH GRADED.
   b. AREAS SLOPING LESS THAN 4:1 TILLED WITH A FARM IMPLEMENT SUCH AS A DISC, PLOW OR SPRING TOOTH THAT RESULTS IN COARSE SURFACE TEXTURE.
   c. STRAW SPREAD AND TRACKED INTO THE SURFACE. TRACK PERPENDICULAR TO THE DIRECTION OF FLOW.
   d. EROSION CONTROL BLANKETS – INCLUDING AN APPROVED GRASS SEED/FERTILIZER MIX IF AREA IS FINISH GRADED.
   e. OTHER METHODS AS SPECIFICALLY APPROVED BY THE CITY ENGINEER.
6. ALL SLOPES 4:1 OR STEEPER SHALL BE CAT-TRACKED PERPENDICULAR TO THE DIRECTION OF FLOW PRIOR TO OCTOBER 1 – IN ADDITION TO ONE OF THE ACCEPTABLE EROSION CONTROL MEASURES SET FORTH IN NO. 5 ABOVE.
7. SEED MIXTURES SHALL INCLUDE FERTILIZERS OF THE TYPE AND RATE OF APPLICATION AS RECOMMENDED BY GENERALLY ACCEPTED AREA PRACTICES.
8. PRIOR TO OCTOBER 1 CONTINUOUS EROSION CONTROL BLANKETS PLUS STRAW BALES AND/OR ROCK CHECK DAMS @ 100 FOOT INTERVALS SHALL BE INSTALLED IN ALL AREAS HAVING A POTENTIAL FOR CONCENTRATED WATER FLOW (I.E. SWALES AND DRAINAGE CHANNELS).
9. SEDIMENT PONDS INCLUDING CUTOFF / DIRECTIVE DITCHING, AS REQUIRED AND AS SHOWN ON THE PLANS SHALL BE IN PLACE AND OPERATIONAL PRIOR TO OCTOBER 1.

UPON COMPLETION OF CONSTRUCTION ACTIVITIES:

1. SILT FENCING SHALL REMAIN AFTER THE COMPLETION OF CONSTRUCTION UNTIL SUFFICIENT VEGETATION IS ESTABLISHED TO PREVENT EROSION AND MOBILIZATION OF SEDIMENT, AND UNTIL APPROVAL FOR REMOVAL IS OBTAINED FROM THE CITY ENGINEER.
2. PERIODIC MAINTENANCE OF EROSION CONTROL MEASURES IS REQUIRED UNTIL PERMANENT DRAINAGE FACILITIES ARE OPERATIONAL AND SUFFICIENT VEGETATION IS ESTABLISHED. SUCH MAINTENANCE INCLUDES, BUT IS NOT LIMITED TO: CLEANING OF CATCH BASINS AND STORM SEWER MANHOLES; MAINTAINING SILT FENCING AND STRAW BALE STRUCTURE; REMOVAL OF ACCUMULATED SOIL; AND STREET CLEANING. A TYPICAL SCHEDULE FOR SUCH MAINTENANCE WOULD BE AT LEAST ONCE PER MONTH AND AFTER ALL SIGNIFICANT STORM EVENTS.

UPON ESTABLISHMENT OF SUFFICIENT VEGETATION AND PERMANENT DRAINAGE FACILITIES OPERATION:

1. REMOVE ALL EROSION CONTROL MEASURES UPON RECEIPT OF APPROVAL FOR SUCH REMOVAL FROM CITY ENGINEER. CLEAR STREETS AND SIDEWALKS OF ACCUMULATED SILT, MUD, AND DEBRIS.
2. CONTINUED EROSION CONTROL IS THE PROPERTY OWNER'S RESPONSIBILITY AFTER EROSION CONTROL MEASURES ARE REMOVED, AND RECEIPT OF APPROVAL FROM THE CITY ENGINEER.

GRADING LEGEND

Symbol	Description
10% (arrow)	GRADE/SLOPE ARROW – ARROW POINTS DOWNHILL
+94.90	SPOT ELEVATION
	EXISTING 1' CONTOUR INTERVAL
	EXISTING 5' CONTOUR INTERVAL
	PROPOSED 1' CONTOUR INTERVAL
	PROPOSED 5' CONTOUR INTERVAL
SF	SILT FENCE
	PROPOSED GRAVEL ROADWAY
	PROPOSED CONCRETE PAVING
	EXISTING GRAVEL
	EXISTING CONCRETE PAVING
	EXISTING ASPHALT PAVING

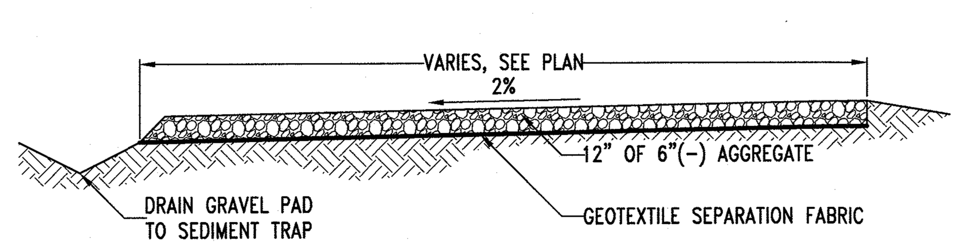

GRAVEL TRACKING PAD — NTS — 1/C2

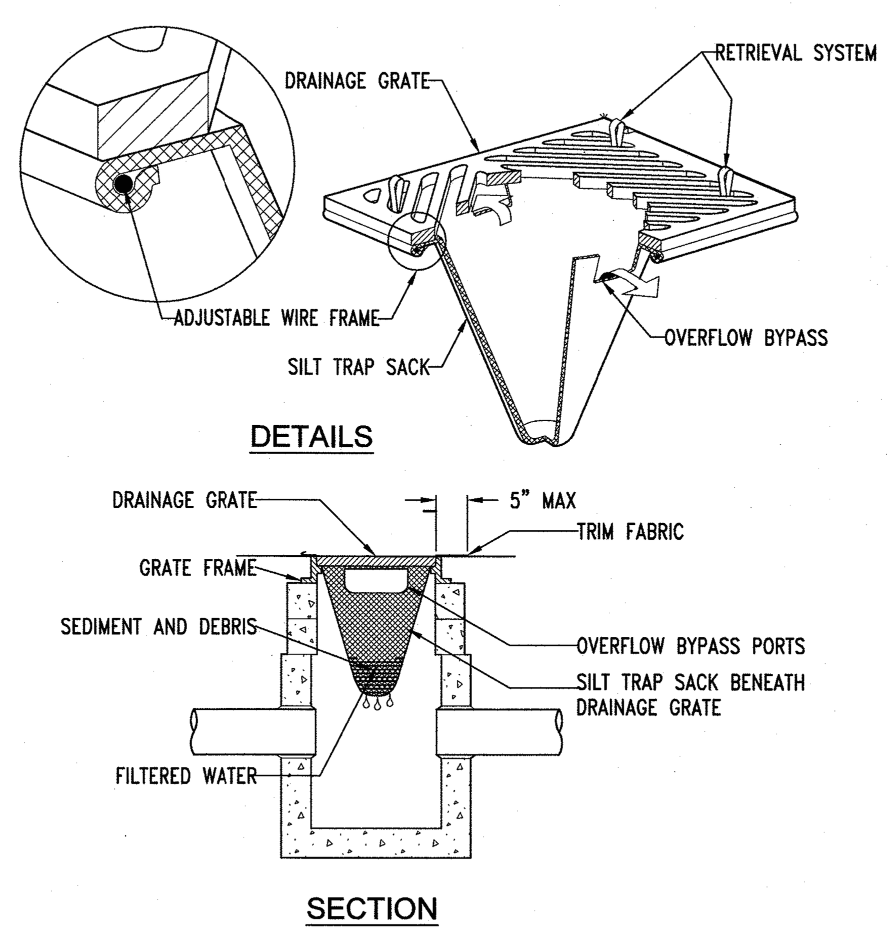

SECTION
NOT TO SCALE

NOTES:
1. SIZE AND SHAPE OF THE SILT TRAP SACK TO FIT THE STORM STRUCTURE IT WILL SERVICE. (RECTANGULAR OR ROUND).
2. THE SILT TRAP SACK SHALL HAVE A BUILT-IN HIGH-FLOW RELIEF SYSTEM (OVERFLOW BYPASS).
3. THE SILT TRAP SACK ASSEMBLY MUST ALLOW REMOVAL WITHOUT SPILLING THE COLLECTED MATERIAL.
4. EMPTY SILT TRAP SACK AND DISPOSE OF SEDIMENT AND DEBRIS BEFORE THE SACK IS HALF-FULL.
5. ENSURE THE SILT TRAP SACK ASSEMBLY DOES NOT SPILL OR FALL INTO THE STORM STRUCTURE. IF SEDIMENT IS SPILLED INTO THE STORM STRUCTURE, REMOVE THE SPILLED MATERIAL BY SUCTION HOSE OR OTHER APPROVED METHOD.

CATCH BASIN PROTECTION — NTS — 2/C2

FENCE WITH 2"X2" PRE-INSTALLED POSTS IS NOT ALLOWED

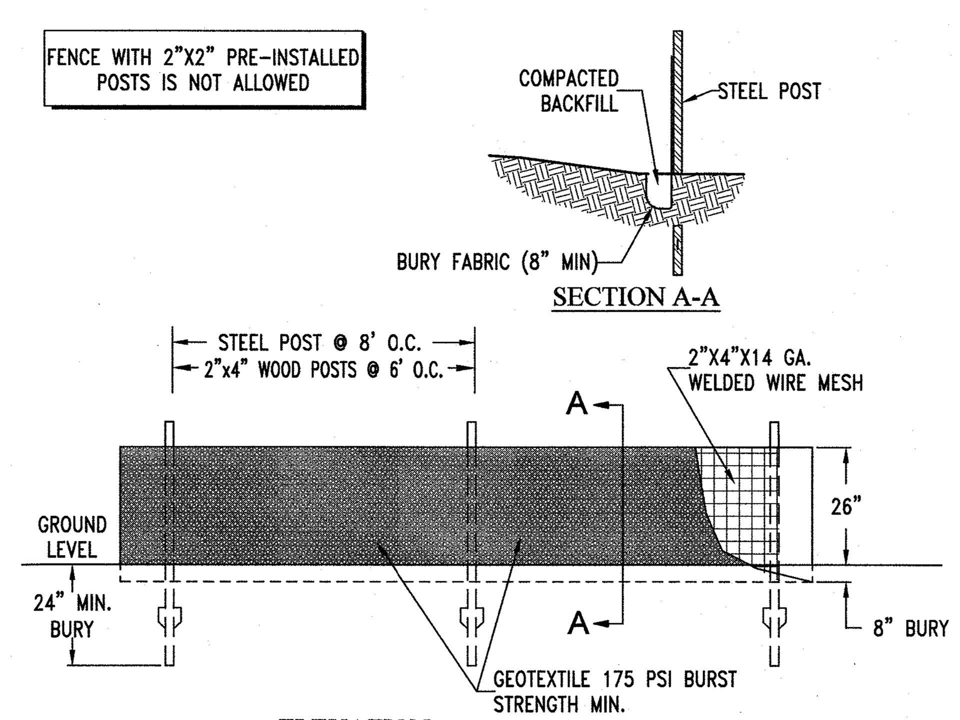

SILT FENCE NOTES:
1. ATTACH WIRE MESH TO POSTS WITH APPROVED METAL DEVICES.
2. ATTACH GEOTEXTILE FABRIC TO THE UP-SLOPE SIDE OF THE POSTS AND WIRE MESH TOP AND BOTTOM WITH APPROVED METAL FASTENERS @ 24" O.C. MAXIMUM SPACING.
3. GEOTEXTILE FABRIC TOP EDGE SHALL BE 26" MINIMUM ABOVE GROUND.
4. OVERLAP VERTICAL SILT FENCE SPLICES 8' MINIMUM (POST TO POST). SEE ELEVATION, ABOVE. AVOID SUMPS AND OTHER LOW POINTS.

SILT FENCING DETAIL — NTS — 3/C2

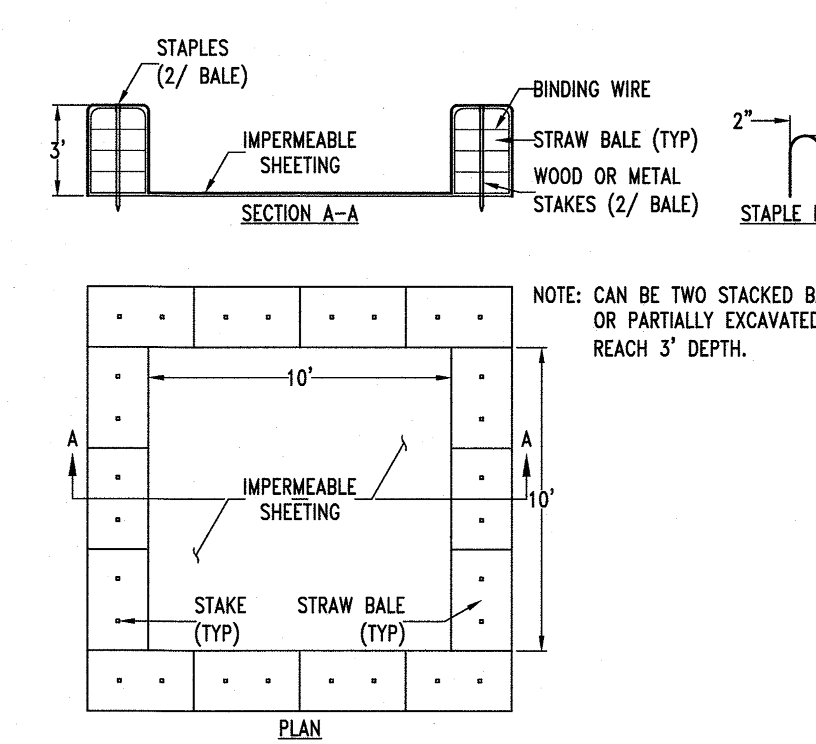

NOTE: CAN BE TWO STACKED BALES OR PARTIALLY EXCAVATED TO REACH 3' DEPTH.

CONSTRUCTION SPECIFICATIONS

1, LOCATE WASHOUT STRUCTURE A MINIMUM OF 50' AWAY FROM OPEN CHANNELS, STORM DRAIN INLETS, SENSITIVE AREAS, WETLANDS, BUFFERS AND WATER COURSES AND AWAY FROM CONSTRUCTION TRAFFIC.
2. SIZE WASHOUT STRUCTURE FOR VOLUME NECESSARY TO CONTAIN WASH WATER AND SOLIDS AND MAINTAIN AT LEAST 4" OF FREEBOARD. TYPICAL DIMENSIONS ARE 10'x10'x3' DEEP.
3. PREPARE SOIL BASE FREE OF ROCK OR OTHER DEBRIS THAT MAY CAUSE TEARS OR HOLES IN THE LINER. FOR LINER, USE 10 MIL OR THICKER UV RESISTANT, IMPERMEABLE SHEETING, FREE OF HOLES AND TEARS OR OTHER DEFECTS THAT COMPROMISE IMPERMEABLITY OF THE MATERIAL.
4. PROVIDE A SIGN FOR THE WASHOUT IN CLOSE PROXIMITY TO THE FACILITY.
5. KEEP CONCRETE WASHOUT STRUCTURE WATER TIGHT. REPLACE IMPERMEABLE LINER IF DAMAGED (E.G., RIPPED OR PUNCTURED). EMPTY OR REPLACE WASHOUT STRUCTURE THAT IS 75% FULL, AND DISPOSE OF ACCUMULATED MATERIAL PROPERLY. DO NO REUSE PLASTIC LINER. WET-VACUUM STORED STORED LIQUIDS THAT HAVE NOT EVAPORATED AND DISPOSE OF IN AN APPROVED MANNER. PRIOR TO FORECASTED RAINSTORM, REMOVE LIQUIDS OR COVER STRUCTURE TO PREVENT OVERFLOWS. REMOVE HARDENED SOLIDS, WHOLE OR BROKEN UP, FOR DISPOSAL OR RECYCLING. MAINTAIN RUNOFF DIVERSION AROUND EXCAVATED WASHOUT STRUCTURE UNTIL STRUCTURE IS REMOVED.

CONCRETE WASHOUT STRUCTURE — NTS — 4/C2

Hodge & Associates, Inc.
Engineers • Planners • Landscape Architects
P.O. Box 8728
405 S. Washington Street
Moscow Idaho 83843
(208) 882-3520

PROFESSIONAL ENGINEER LICENSED 13384 4-19-22 STATE OF IDAHO SCOTT BECKER

LATAH COUNTY FAIRGROUNDS RV PARK
EROSION CONTROL AND GRADING PLAN
LATAH COUNTY FAIRGROUNDS
1021 HAROLD AVE
MOSCOW, IDAHO
(208)-883-5722

Designed By:	SB
Drafted by:	DC
Checked by:	SW/SB
File Name:	4485 GRADING.dwg
Tab:	GRADING
Layer Style:	STANDARD
Plot Style	PRIMARY.CTB
Project:	4485-10-21
Date:	2/22/2022

C2

F:\4485-Fairgrounds Rv Parking\4485-ACAD\4485 GRADING.dwg 4/18/2022 4:40 PM

Received 04-19-2022

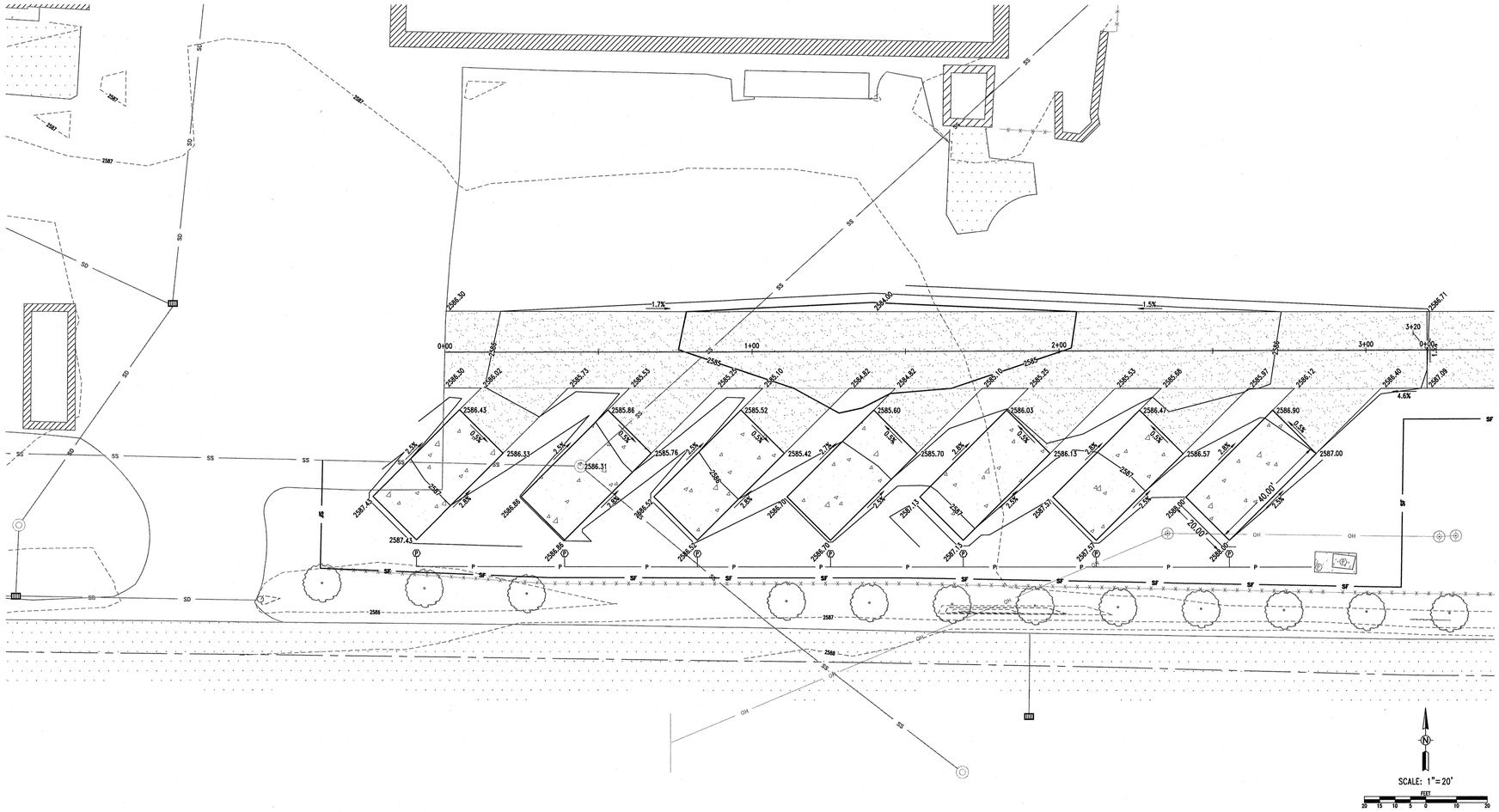

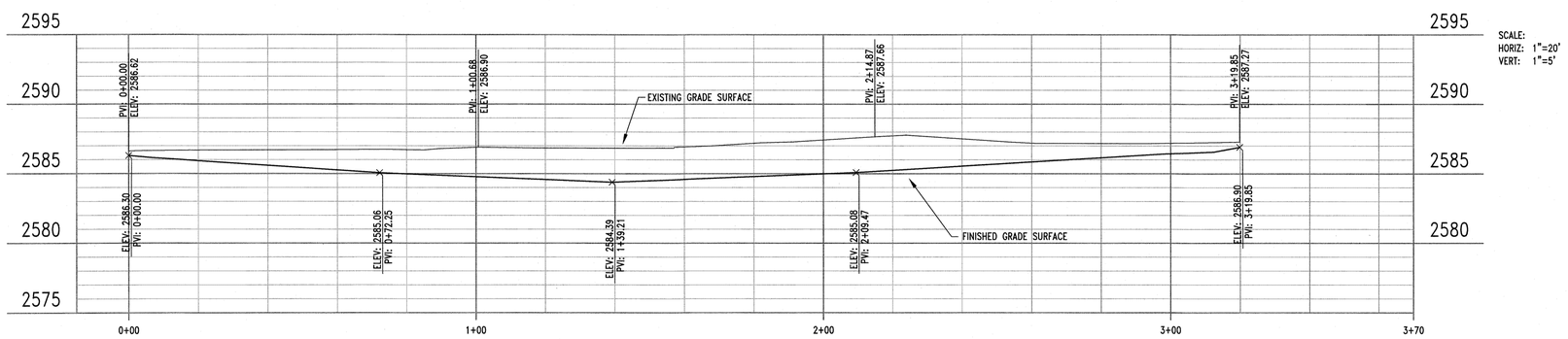

SCALE:
HORIZ: 1"=20'
VERT: 1"=5'

CL ACCESS ROAD: PLAN AND PROFILE - STA. 0+00 - STA. 3+56.27

Know what's below. Call before you dig.

Hodge & Associates, Inc.
Engineers • Planners • Landscape Architects
P.O. Box 8728
405 S. Washington Street
Moscow, Idaho 83843
(208) 882-3520

PROFESSIONAL ENGINEER LICENSED 13384 4-19-22 STATE OF IDAHO SCOTT BECKER

LATAH COUNTY FAIRGROUNDS RV PARK
PLAN AND PROFILE - STA. 0+00 - STA. 3+20
LATAH COUNTY FAIRGROUNDS
1021 HAROLD AVE
MOSCOW, IDAHO
(208)-883-5722

Designed By:	SB
Drafted by:	DC
Checked by:	SW/SB
File Name:	4485 PROFILE.dwg
Tab:	PROFILE
Layer Style:	STANDARD
Plot Style	PRIMARY.CTB
Project:	4485-10-21
Date:	4/15/2022

C3

Received 04-19-2022

LUP2022-0010

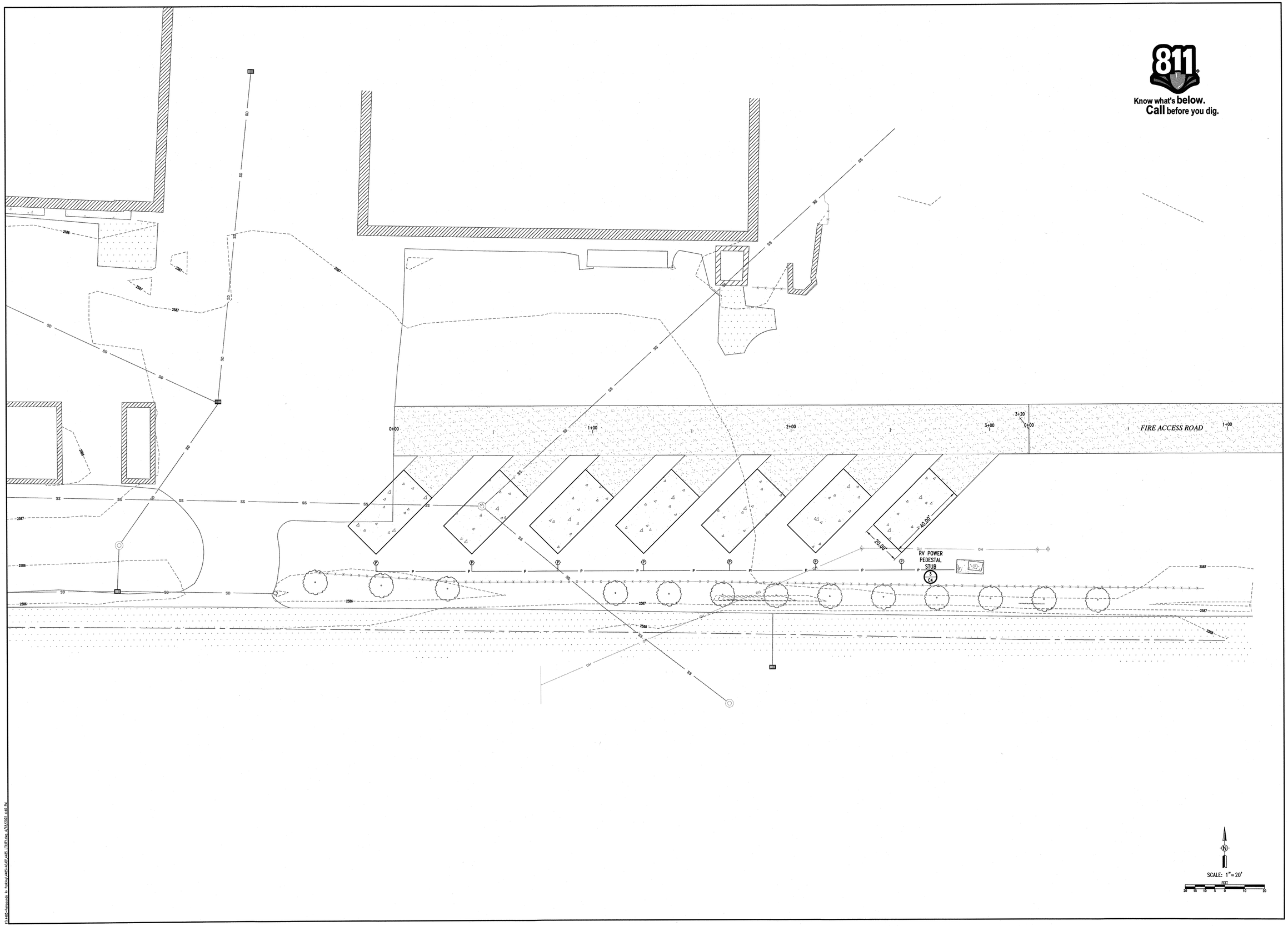

Hodge & Associates, Inc.
Engineers • Planners • Landscape Architects
P.O. Box 8728
405 S. Washington Street
Moscow Idaho 83843
(208) 882-3520

PROFESSIONAL ENGINEER
LICENSED
13384
4-19-22
STATE OF IDAHO
SCOTT BECKER

LATAH COUNTY FAIRGROUNDS RV PARK

UTILITY LAYOUT PLAN

LATAH COUNTY FAIRGROUNDS
1021 HAROLD AVE
MOSCOW, IDAHO
(208)-883-5722

Designed By:	SB
Drafted by:	DC
Checked by:	SW/SB
File Name:	4485 UTILITY.dwg
Tab:	UTILITY
Layer Style:	STANDARD
Plot Style	PRIMARY.CTB
Project:	4485-10-21
Date:	4/15/2022

C4

Received 04-19-2022

LUP2022-0010

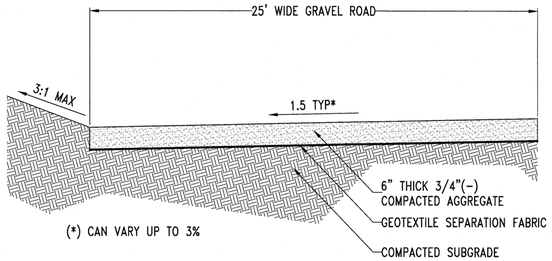

ROADWAY TYPICAL SECTION — NTS — 1/C4

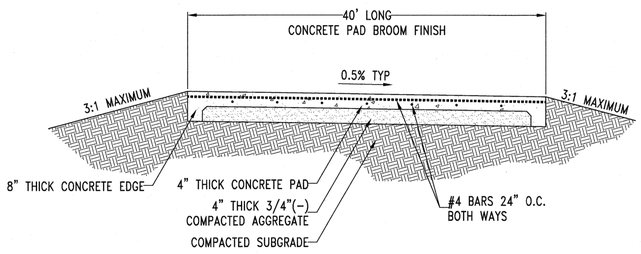

RV PAD — NTS — 2/C4

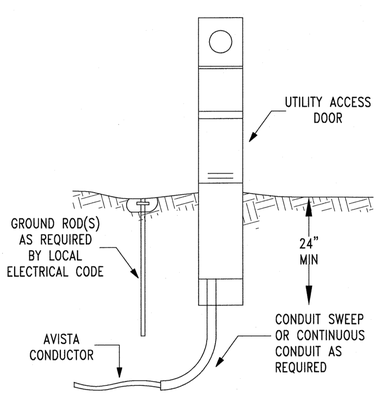

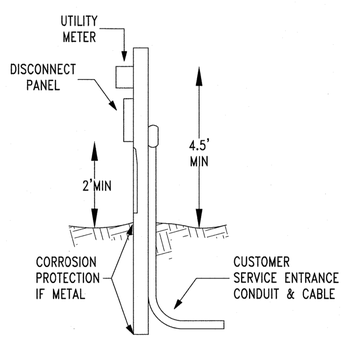

RV POWER PEDESTAL STUB — NTS — 3/C4

Know what's **below.**
Call before you dig.

GENERAL NOTES

1. ALL WORK TO BE IN ACCORDANCE WITH CITY OF MOSCOW STANDARDS.
2. UNDERGROUND UTILITIES SHOWN ON THESE DRAWINGS ARE NOT GUARANTEED ACCURATE OR COMPLETE. CALL 811 FOR UTILITY LOCATES BEFORE BEGINNING CONSTRUCTION.
3. ALL CONSTRUCTION MUST COMPLY WITH STATE OF IDAHO STANDARDS FOR DRINKING WATER SYSTEMS AND WITH THE STATE OF IDAHO DEPARTMENT OF ENVIRONMENTAL QUALITY CRITERIA FOR SEWAGE WORKS DESIGN.
4. THE OWNER IS RESPONSIBLE FOR EROSION AND SEDIMENT CONTROL IN ACCORDANCE WITH ALL LOCAL, STATE, AND FEDERAL ORDINANCES, POLICIES AND LAWS. AN APPROVED EROSION CONTROL PLAN IS PROVIDED AS PART OF THESE CONSTRUCTION DRAWINGS.
5. MAXIMUM DENSITY AND OPTIMUM MOISTURE CONTENT WILL BE DETERMINED USING AASHTO T99 EXCEPT AS NOTED. IN PLACE DENSITY AND MOISTURE CONTENT SHALL BE DETERMINED BY ASTM D 2922 (NUCLEAR DENSOMETER).
6. THE DEVELOPER'S ENGINEER TO FURNISH DESCRIPTIONS FOR ALL PUBLIC UTILITY EASEMENTS OUTSIDE THE BOUNDARY OF THE PLAT. THE CITY WILL PREPARE THE EASEMENT DOCUMENTS.

ROADWAY

1. ALL BACKFILL AND SUBGRADE IN THE ROADWAY AND RV PAD SECTIONS SHALL BE COMPACTED TO 95% OF MAXIMUM DENSITY.
2. SEE TYPICAL SECTION 1, 2, & 3 THIS SHEET. PLACE COMBINATION CURB AND GUTTER, (SEE DWG #6 CITY OF MOSCOW STANDARD DRAWINGS) ON ALL PUBLIC STREETS.
3. ADJUST ALL MANHOLES AND WATER VALVE BOXES TO FINISHED GRADE PRIOR TO PAVING.
4. ALL OFFSET DIMENSIONS ARE FROM INDICATED STATION LINES UNLESS OTHERWISE NOTED.
5. STREET MONUMENTS SHALL BE SET BY ENGINEER IN CASINGS PROVIDED AND SET BY CONTRACTOR. ENGINEER SHALL MARK LOCATION OF CASINGS FOR CONTRACTOR.
6. ALL CUT OR FILL SLOPES ON STREET RIGHTS-OF-WAY SHALL BE MULCHED TO PREVENT EROSION. SEE EROSION CONTROL PLAN, SHEET C2.
7. ALL CURB RADII AT INTERSECTIONS TO BE 25 FEET, PER CITY STANDARD, UNLESS SPECIFICALLY NOTED OTHERWISE.

STORM & SANITARY SEWER

1. THE CITY OF MOSCOW IS OPERATOR OF WATER AND SEWER FACILITIES SERVING THIS DEVELOPMENT.
2. ALL TRENCH AND FOUNDATION EXCAVATIONS GREATER THAN FOUR FEET DEEP SHALL HAVE SLOPES OF 1.5:1 (HORIZONTAL TO VERTICAL) OR, BRACING OR SHORING SHALL BE PROVIDED IN ACCORDANCE WITH OSHA AND OTHER APPROPRIATE LOCAL CODES.
3. ALL SATURATED, LOOSE, OR DISTURBED SOIL SHALL BE REMOVED FROM THE BOTTOM OF UTILITY TRENCHES PRIOR TO PLACEMENT OF PIPE BEDDING. PIPE BEDDING AND TRENCH BACKFILL SHALL BE PLACED IN ACCORDANCE WITH CITY OF MOSCOW STANDARDS.
4. SEWER STUBS SHALL BE INSTALLED AT A MINIMUM SLOPE OF 1/4" PER FOOT, AND CONNECTED TO MAINS USING MANUFACTURED WYES.
5. SANITARY SEWER STUBS SHALL BE TERMINATED BY PROVIDING AN ELBOW AND CAPPED RISER TO 12" MINIMUM ABOVE FINISHED GRADE. TERMINATE AT PROPERTY LINE. MATERIAL SHALL BE GREEN (SDR 35) PVC. WRAP 'SEWER' LOCATE TAPE ON ENDS; TAPE FURNISHED BY CONTRACTOR.
6. FOUNDATION DRAIN STUBS SHALL BE TERMINATED BY PROVIDING AN ELBOW & CAPPED RISER TO 12" MINIMUM ABOVE GRADE. TERMINATE AT PROPERTY LINE. MATERIAL SHALL BE WHITE PVC. WRAP 'STORM SEWER' LOCATE TAPE ON ENDS; TAPE FURNISHED BY CONTRACTOR.
7. ALL STORM AND SANITARY SEWER LINES SHALL HAVE 2.0' MINIMUM COVER.
8. USE ECCENTRIC CONES EXCEPT WHEN SPECIFICALLY APPROVED BY THE ENGINEER. PLACE THE CONE ENTRY HOLE ABOVE THE OUTLET PIPE. FLAT TOPS ARE NOT ALLOWED WITHOUT APPROVAL OF THE ENGINEER.
9. SANITARY SEWER PIPE (SS): ALL SS PIPE TO BE SDR 35, PVC (GREEN), UNLESS OTHERWISE NOTED.
10. STORM SEWER PIPE (SD): ALL SD PIPE TO BE SDR 35, PVC (WHITE), UNLESS OTHERWISE NOTED.

WATER

1. WATER SERVICES SHALL BE DUG AND INSTALLED BY CONTRACTOR AT OWNER'S EXPENSE. CITY CREW WILL MAKE TAP TO MAIN. ALL WATER SERVICE MATERIALS FURNISHED BY CITY.
2. ALL WATER SERVICES SHALL BE INSPECTED BY THE CITY PRIOR TO BACKFILLING TRENCHES.
3. INSTALL "LOCATE" TAPE 18" ABOVE PIPE AND #10 LOCATE WIRE DIRECTLY ABOVE PIPE IN PVC WATER LINE TRENCH. REFER TO DETAIL, THIS SHEET.
4. HYDROSTATIC TESTING AND DISINFECTION OF WATER MAINS SHALL BE DONE IN ACCORDANCE WITH CITY OF MOSCOW STANDARDS. THE CONTRACTOR SHALL REQUEST PIPE TESTING AT LEAST 48 HOURS IN ADVANCE OF THE TIME ACTUAL TESTS SHALL BE PERFORMED.
5. BACK FLOW DEVICES SHALL BE PROVIDED PER CITY CODES AND POLICIES.
6. FIRE HYDRANTS SHALL BE PLACED WITH THE STEAMER PORT FACING THE STREET OR DRIVEWAY AS APPROPRIATE AND SHALL BE MAINTAINED CLEAR AND ACCESSIBLE FOR FIRE PROTECTION DURING CONSTRUCTION. NO OBSTRUCTIONS SHALL BE PLACED WITHIN THREE FEET OF THE FIRE HYDRANT.
7. WATER PIPE: ALL WATER MAINS TO BE C 900 CLASS 150 PVC, UNLESS OTHERWISE NOTED.

SEPARATION OF WATER AND SEWER

A. WATER AND SEWER (SANITARY OR STORM) MAINS SHALL BE SEPARATED BY A HORIZONTAL DISTANCE NO LESS THAN TEN (10) FEET. IN ANY INSTANCE WHERE SUCH SEPARATION IS NOT ACHIEVABLE, THE FOLLOWING STANDARDS SHALL BE MET:

I. THE WATER AND SEWER MAINS SHALL BE SEPARATED BY AT LEAST SIX (6) HORIZONTAL FEET MEASURED BETWEEN THE OUTSIDE WALLS OF THE PIPES, AND THE SEWER MAIN SHALL BE CONSTRUCTED TO WATER MAIN STANDARDS AT ALL SUCH POINTS; AND

II. THE WATER MAIN SHALL BE A MINIMUM OF EIGHTEEN (18) INCHES ABOVE THE SEWER MAIN.

B. THE REQUIREMENTS FOR THE VERTICAL SEPARATION OF WATER AND SEWER MAINS ARE AS FOLLOWS:

I. AT ANY POINT WHERE THE SEWER AND WATER MAINS CROSS, THEY SHALL BE SEPARATED BY A VERTICAL DISTANCE OF NO LESS THAN EIGHTEEN (18) INCHES.

II. AT ANY POINT WHERE THE SEWER MAIN CROSSES ABOVE THE WATER MAIN THE SEWER MAIN SHALL BE SUPPORTED TO MAINTAIN LINE & GRADE.

III. AT ANY POINT WHERE THE SEWER AND WATER MAIN CROSS, THE CROSSING SHALL BE ARRANGED SO THAT THE WATER MAIN JOINTS WILL BE EQUAL DISTANCE AND AS FAR AS POSSIBLE FROM THE SEWER MAIN JOINTS.

IV. IF THE WATER MAIN IS BELOW THE SEWER MAIN, THE SEWER MAIN SHALL BE CONSTRUCTED OF MATERIALS CONFORMING TO WATER MAIN STANDARDS AND PRESSURE TESTED TO 150 PSI TO ASSURE WATER TIGHTNESS PRIOR TO BACKFILLING IF THE EIGHTEEN (18) INCH VERTICAL SEPARATION CANNOT BE MAINTAINED.

V IN LIEU OF CONSTRUCTING (OR RECONSTRUCTING) A NON-POTABLE WATER MAIN DUE TO LESS THAN EIGHTEEN (18) INCHES OF VERTICAL SEPARATION FROM A POTABLE WATER MAIN, EITHER THE NON-POTABLE MAIN OR THE POTABLE WATER MAIN MAY BE ENCASED WITH A SLEEVING MATERIAL ACCEPTABLE TO DEQ FOR A DISTANCE OF TEN (10) HORIZONTAL FEET ON BOTH SIDES OF THE CROSSING.

Hodge & Associates, Inc.
Engineers • Planners • Landscape Architects
P.O. Box 8728
4405 S. Washington Street
Moscow Idaho 83843
(208) 882-3503

PROFESSIONAL ENGINEER LICENSED 13384 4-19-22 STATE OF IDAHO SCOTT BECKER

LATAH COUNTY FAIRGROUNDS RV PARK
GENERAL NOTES AND DETAILS
LATAH COUNTY FAIRGROUNDS
1021 HAROLD AVE
MOSCOW, IDAHO
(208)-883-5722

Designed By:	SB
Drafted by:	DC
Checked by:	SW/SB
File Name:	4485 DETAIL.dwg
Tab:	DETAIL
Layer Style:	STANDARD
Plot Style	PRIMARY.CTB
Project:	4485-10-21
Date:	4/15/2022

C5

Received 04-19-2022

LUP2022-0010

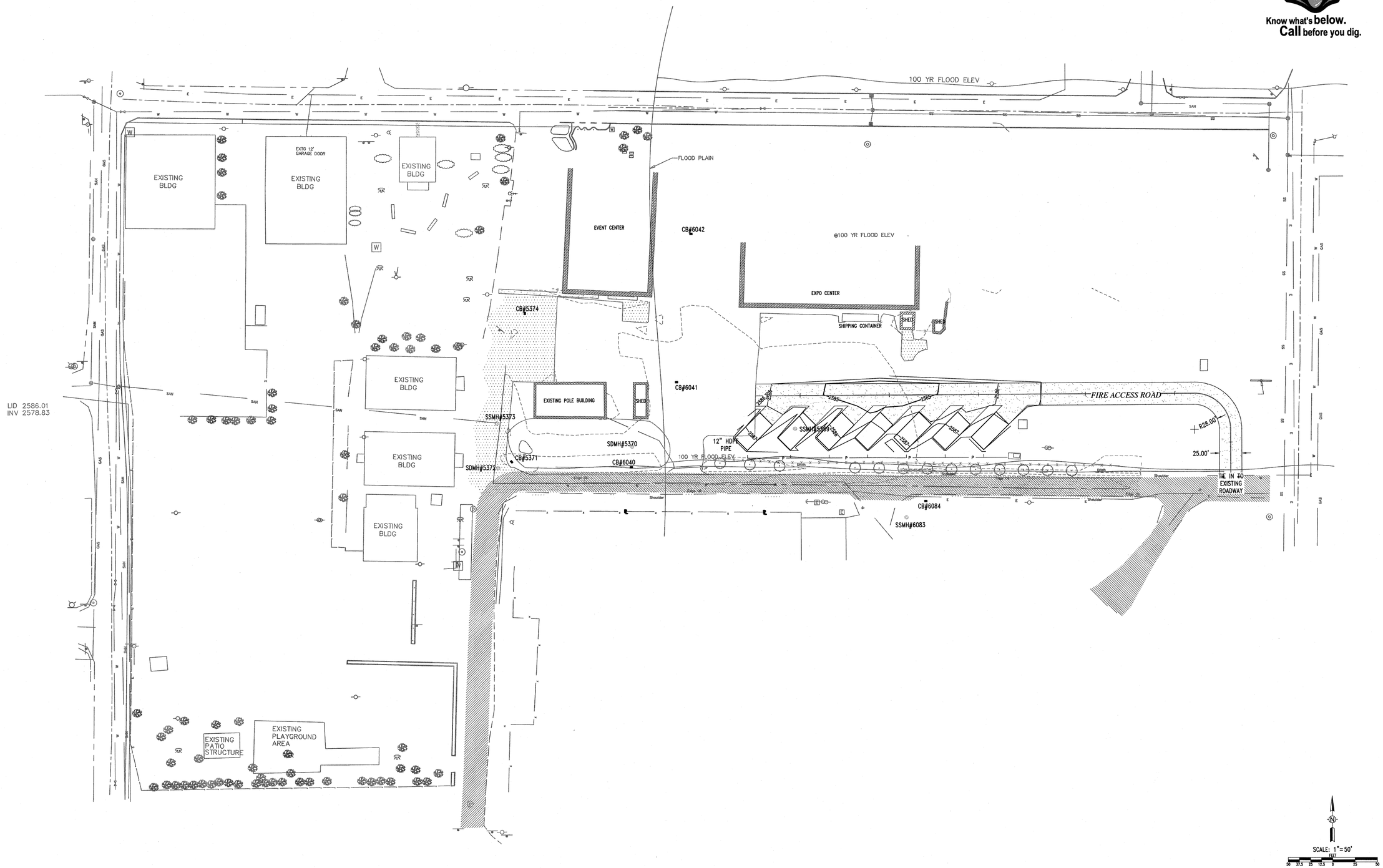

Know what's **below.**
Call before you dig.

Hodge & Associates, Inc.
Engineers • Planners • Landscape Architects
P.O. Box 8728
405 S. Washington Street
Moscow Idaho 83843
(208) 882-3520

PROFESSIONAL ENGINEER
LICENSED
13384
4-19-2022
STATE OF IDAHO
SCOTT BECKER

LATAH COUNTY FAIRGROUNDS RV PARK
FAIRGROUNDS OVERVIEW
LATAH COUNTY FAIRGROUNDS
1021 HAROLD AVE
MOSCOW, IDAHO
(208)-883-5722

Designed By:	SB
Drafted by:	DC
Checked by:	SW/SB
File Name:	4485 OVERVIEW
Tab:	GRADING
Layer Style:	STANDARD
Plot Style	PRIMARY.CTB
Project:	4485-10-21
Date:	4/15/2022

C6

Received 04-19-2022

City of Moscow
Reasoned Statement of Relevant Criteria and Standards for Granting or Denial of Special Use Permit

This document explains and establishes the criteria and standards as well as the relevant facts and rationale including, where applicable, the City of Moscow Comprehensive Plan, the Moscow City Code, State of Idaho Code, and the United States Constitution for the granting or denial of a Special Use Permit.

Applicant's name and address: Latah County and Latah County Fair Board
522 S Adams ST and 1021 Harold ST
Moscow, ID 83843

Identification and/or location of subject property:
1021 Harold Street

Date of Public Hearing: Tuesday, April 22, 2008 and Tuesday, May 13, 2008

Name of Hearing Body: Board of Adjustment

Nature of subject Special Use Permit:
Application to continue the uses of the Latah County Fairgrounds in the Medium Density Residential (R-3) Zoning District as described in Exhibits A and B, attached hereto. The application includes a request to construct an addition to the Exhibit Building for storage and a request to determine that any principal permitted use allowed in the zoning district be allowed without requiring an amendment to the Special Use Permit.

Decision:
Conditionally approve the uses of the fairground site as long as the property is operated as the County Fairgrounds and is owned by Latah County, proposed storage addition, and certain uses allowed in the underlying zoning district subject to the description of uses in Exhibits A and B, attached hereto.

Relevant criteria and standards upon which decision is based:

1. The proposed use (~~will~~/will not) endanger the public health or safety if located where proposed and (~~will~~/will not) result in conditions which will tend to generate nuisances (including but not limited to noise, dust, glare, vibrations, odors and the like), or any potential nuisances will be appropriately mitigated. Applicable commentary:
The historical uses of the fairgrounds have been consistent since SUP approval in 1992 and have not caused significant safety, health or nuisance issues. Modification to the previously approved uses of the Fairgrounds are allowed and regulated by attached

Exhibits A and B to mitigate potential impacts. New or expanded buildings and uses that are dissimilar to the historical uses of the Fairgrounds shall require a SUP to review the potential for unanticipated and cumulative impacts on the neighborhood. The proposed addition for storage will have little affect on the public health or safety and will not result in nuisances as the structure will comply with applicable building codes.

2. The proposed use (meets/~~does not meet~~) all applicable development standards of the Zoning Code, including building height, setbacks, parking, use limitation, landscaping, and performance standards. Applicable commentary:

The proposed uses occur in existing structures. New and expanded structures, including the proposed addition to the Exhibit Building, shall be reviewed through the building permit process to address any applicable development standards. Additionally, new or expanded buildings that require a building permit shall be reviewed through SUP to insure that the allowed uses do not create a cumulative impact on the neighborhood.

3. The proposed use (~~will~~/will not) be injurious or detrimental to adjoining properties or the neighborhood. Applicable commentary:

The majority of the proposed uses occur indoors minimizing any potential noise impacts of the use. Outdoor commercial uses are further limited to mitigate noise impacts. White Avenue is to be promoted as the main entrance to minimize increased traffic adjacent to residential uses. Any new structure to the site will be required to provide parking to meet the standards of the Zoning Code in addition to being reviewed through the SUP process. The proposed addition to the exhibit building is adequately setback from residential uses, used only for storage, and will be similar in character to the existing building.

4. The proposed use (is/~~is not~~) a public necessity (and/~~but~~) (is/~~is not~~) justified by the applicant and deemed by the Board of Adjustment to be of benefit to the public. Applicable commentary:

The proposed use of the Fairgrounds functions as a public service which is to the benefit of the public. The site, structures, and uses support the need for recreational opportunities and open space within the community as well as providing a location where community events and meetings can occur. The proposed storage addition will better provide for adequate and tidy facilities for activities and events.

5. The character of the proposed use, if developed according to the plan as submitted, (will/~~will not~~) be in harmony with the area in which it is to be located. Applicable commentary:

The majority of the uses, if conducted as proposed, will be in harmony with the area in which they have been located for many years. The open space and recreational opportunities combined with a campus of buildings that serve the needs for community events provides a buffer between the residential uses to the north and commercial uses to the south. Addition of storage will not affect the character of the area, provided it is constructed to be similar to the Exhibit Building. Review of new and expanded buildings will provide an opportunity to review cumulative impacts to the neighborhood.

6. The proposed use (~~will~~/will not) endanger the public health or safety. Applicable commentary:

The proposed uses do not create endangerment to public health or safety as they are primarily conducted indoors. The proposed storage addition creates no concern for public health or safety. Conditions to maintain the Harold Street entrance as a fire lane, to maintain the grounds in a clean manner, and to encourage uses away from residential areas will reduce the impacts to public health and safety while minimizing nuisances.

7. The proposed use (~~will~~/will not) be in conflict with the Comprehensive Plan. Applicable commentary:

The proposed use of the Fairgrounds and storage addition are consistent with the Comprehensive Plan as the land use designation is Public (P) and is appropriate for such uses. The proposed uses also uphold the Parks and Recreation goal to provide recreational opportunities to all areas of the community and the Economic Development implementation policy to encourage special events to occur in Moscow. The proposed uses do not conflict with the Housing objective to protect residential uses from nuisances or the Transportation corridor designations.

Rationale for this decision is based upon the Moscow Comprehensive Plan, Idaho Code, Moscow City Code, United States Constitution and the facts within the record.

In accordance with Idaho Code Section 67-8003, all real property owners subject to governmental regulatory or administrative actions are eligible to request a written taking analysis be completed concerning the subject action. Such requests must be submitted in writing to the City Clerk within 28 days of the final decision.

Conditions of Approval:

The Board of Adjustment may impose conditions including, but not limited to, those (1) minimizing adverse impact on other development; (2) controlling the sequence and timing of development; (3) controlling the duration of development; (4) assuring that development is maintained properly; (5) designating the exact location and nature of development; (6) requiring the provision for on-site or off-site public facilities or services; (7) requiring more restrictive standards than those generally required in an ordinance; and/or (8) requiring mitigation of effects of the proposed development upon service delivery by any political subdivision, including school districts, providing services within the planning jurisdiction.

The conditions of approval for the subject Special Use Permit are:

1. Approval for the uses of the Fairgrounds, as described in Exhibit A, shall be valid as long as the use of the property is operated as the County Fairgrounds and is owned by Latah County. Upon cessation of the Fairground use or upon sale of the Fairground property, uses of the site shall revert to permitted uses of the zoning district.

2. Any addition or expansion of a building that requires a building permit shall require an amendment to this SUP.
3. Sound amplification equipment shall not be used outdoors for commercial uses unless approved through SUP.
4. The White Avenue entrance shall be promoted as the main entrance to the Fairgrounds to direct traffic away from the Harold Street entrance.
5. The Harold Street entrance shall be maintained as a fire lane.
6. The Fairgrounds shall be maintained in a clean and attractive manner as to be compatible with the surrounding neighborhood. The Fair Board and management are responsible to maintain the grounds and control the users of the grounds to that end.
7. Uses and activities upon the Fairgrounds shall be located away from adjacent residential uses as much as reasonably possible in an effort to minimize potential impact upon the neighborhood.
8. The proposed 20 by 60 foot addition to the exhibit building shall be utilized only for storage purposes, located at the southeast portion of the exhibit building, follow the roofline of the exhibit building, and be similar in appearance to the exhibit building as described in the application.

REVOCATIONS:

IF A BUILDING PERMIT AND/OR OCCUPANCY PERMIT PERTAINING TO THE SUBJECT SPECIAL USE PERMIT IS NOT OBTAINED FOR THE SUBJECT PROPERTY WITHIN ONE YEAR FROM THE DATE OF THE BOARD OF ADJUSTMENT'S FINAL DECISION, SUCH SPECIAL USE PERMIT SHALL BE IMMEDIATELY REVOKED AND SHALL BE AUTOMATICALLY NULL AND VOID. IF THE USE AND/OR OCCUPANCY FOR WHICH A SPECIAL USE PERMIT IS APPROVED CEASES FOR A PERIOD OF TWELVE CONSECUTIVE MONTHS, UNLESS OTHERWISE PROVIDED FOR IN THE SPECIAL USE PERMIT, THEN THE SPECIAL USE PERMIT SHALL BE IMMEDIATELY REVOKED AND SHALL BE AUTOMATICALLY NULL AND VOID.

Attested By: _____ 19 May 08

Signature of Chair, Board of Adjustment Date

EXHIBIT A

Uses and Allowances for Latah County Fairgrounds
Approved by Special Use Permit

This document sets forth the uses and allowances for the activities conducted upon the Latah County Fairgrounds (Fairgrounds) as approved through Special Use Permit (SUP) by the Board of Adjustment at their May 13, 2008 meeting.

I. LEGAL NON-CONFORMING USES: The rights for any existing legal non-conforming use of the Fairgrounds are not relinquished by granting of this SUP. Non-conforming uses are considered to be those uses that have occurred continually at the Fairgrounds since before 1971. The Latah County Fair (Fair) and the related activities, including recreational vehicle parking for Fair participants, are recognized as legal non-conforming uses of the Fairgrounds.

II. PERMITTED USES: Historically, the Fairgrounds have been used for a variety of activities and events as scheduled through the Fair Office. Exhibit B provides examples of the historical uses of the Fairgrounds and classifies them as either commercial or noncommercial uses. The uses described on Exhibit B and those uses that are similar in nature and impact to the historical uses shall be permitted as follows:

a. Indoor Uses: Indoor activities and events with over 200 participants per day shall be limited to four (4) consecutive days in duration, or as otherwise permitted by SUP.

b. Outdoor Uses: Commercial outdoor activities and events shall be limited to four (4) consecutive days in duration per event and shall not exceed 15 days per year, or as otherwise permitted by SUP.

c. Public Parks and Recreation Facilities: The Fairgrounds may be used by the public as a park for recreational purposes.

d. Noncommercial Private Recreation Facilities: Noncommercial private recreation facilities may be established upon the Fairgrounds except for shooting ranges, golf courses, and golf driving ranges. Such uses are subject to allowances and regulations of the underlying zoning district and conditions of the SUP.

e. Recreational Vehicle Use: Recreational vehicle (RV) parking is permitted in the five (5) designated RV slots near the Lions Park area of the Fairgrounds. Each RV may park for a maximum of 14 nights, or longer if arrangements are made with the Fair Office. The Fair Board may permit RV groups, with more than three (3) RVs, to use the Fairgrounds for parking for a total period not to exceed 21 nights per year. RV parking on the Fairgrounds is permitted only as long as there is no available RV park within Moscow. This use may be further limited and restricted by Fair Board policy changes.

f. Fair Office: Latah County may maintain offices for the purpose of conducting Fairground business.

III. SPECIAL USES: Uses not specified above, uses that exceed specified allowances, and the addition or expansion of buildings that require a building permit require an amendment to the SUP pursuant to City Code.

IV. OTHER USES: Uses that occur on the property owned by Latah County and traditionally maintained as a part of the Fairgrounds, but are leased, operated, and/or maintained separately from the control of the Fair Board require separate SUP review.

V. ALLOWANCES: All development standards, including those for signs, fences, parking, noise and lighting, shall be applied and regulated as provided for in the City Code without amendment to the SUP. Allowances that consider the unique aspect of the Fairgrounds are provided below:

a. Signage: Temporary signs located on Fairground property that advertise a product being sold, advertize an event being held, or provide directions for parking or traffic at the Fairgrounds may be displayed for the duration of the related event.

b. Fencing: Temporary fencing may be allowed during an event in order to facilitate parking and public safety.

c. Parking: Parking must be provided and made available on the Fairgrounds for all activities except the Latah County Fair.

d. Lighting: Temporary outdoor lighting may be utilized to allow for set-up and clean-up of events provided it is directed away from adjacent residential properties and is shut off by 10:00 pm local time.

EXHIBIT B

Historical Uses of Latah County Fairgrounds

This document provides a sample list of the historical uses that have occurred at the Latah County Fairgrounds (Fairgrounds). This list is not all inclusive of the current uses and may contain uses that no longer occur. This list provides a representative description of the types of uses considered to be appropriate to the Fairgrounds under commercial and noncommercial classifications. Activities and events that occur upon the Fairgrounds are scheduled through the Fair Office

I. COMMERCIAL USES: Commercial uses of the Fairgrounds include those activities and events that primarily involve the sale, trade, or distribution of merchandise or services. Historical examples of commercial uses include:

   a. Trade Shows and Fairs: Events that are typically open to the public and include the sale and promotion of merchandise or services. Included are Lewis Clark Traders gun show, Columbia Tractor John Deere Days, and home and garden shows.

   b. Auctions: Examples include Clint's Auction, Garrott's Auction, and City of Moscow Surplus Auction.

   c. Business Staging: Includes activities such as telephone book distribution.

II. NONCOMMERCIAL USES: Noncommercial uses include use of the Fairgrounds as a meeting place and as a venue for events where the primary purpose of such events is not the sale, trade, or distribution of merchandise or services. Historical examples of noncommercial uses include:

   a. Polling: Includes polling for government or non-profit purposes such as civic elections, U.S. Census, and League of Women Voters mock election.

   b. Meeting Location: Group, club, association, or business meetings for the members of such group, club, association, or business. Examples include Senior Citizens Club, Telecommunication Workers Local, Mountain View 4-H, and Moscow Parent Toddler Co-op.

   c. Training Sessions: Periodic workshops, classes, and training for groups and clubs, special interest, or public outreach. Examples include group or club workshops, Palouse Hills Dog Fanciers obedience training, Rathbun Dance Instruction, ATV training, University of Idaho Enrichment Program classes, Latah County Search and Rescue training, and St. John Hardware workshops.

   d. Fundraising Events: Events to raise funds to support a non-profit group or organization, whether sponsored by a group, club, or business. Such fundraising may involve the sale of items or services. Examples include church rummage sales and the Moscow Garden Club plant sale.

   e. Group Events: Events primarily for the members or invitees of a group, club, or business as celebration or appreciation. Examples include

banquets, competitions, dances, rallies, fairs, and customer appreciation events that are not generally open to the public.

f. Public Events: Examples include the Palouse Patchers quilt show, Palouse Hills Dog Fanciers fun matches, and other activities and events that are open to the public and sponsored by a group, club, or organization.

g. Public Service: Activities that provide a public service. Examples include Department of Veterans Affairs mobile clinic, State of Idaho Department of Agriculture waste collection site, and Latah County Search and Rescue search coordination site.

h. Emergency Shelter: The Fairgrounds is designated as an American Red Cross emergency shelter.