Public Works / Finance Committee

Regular Meeting
~Agenda~

www.ci.moscow.id.us

Laurie M. Hopkins
City Clerk

208.883.7015

Monday **November 28, 2022**	**4:00 PM**	**Council Chambers** **206 E. Third St.**

The Moscow Mayor, City Council and Staff welcome you to today's meeting. We appreciate and encourage public participation. For regular agenda items, an opportunity for public comment is sometimes provided after the staff report. However, the formality of procedures varies with the purpose and subject of the agenda item and limitations may be placed on the time allowed for comments. If you plan to address the Committee, you will find a list of "Tips for Addressing the Council" in the door pocket outside the City Council Chambers. Please note that Committee meetings are televised, videotaped and/or recorded. Links to view the Committee meeting live can be found on the City website, YouTube, Facebook and Spectrum Cable 1301. Thank you for your interest in City government.

REGULAR AGENDA

1. **Approval of Public Works/Finance Committee October 10, 2022 Minutes (ACTION ITEM) - Taylor Riedner**

2. **Disbursement Report October 2022 (ACTION ITEM) - Sarah Banks**

   Presentation of the Accounts Payable Report for the month ending October, 2022.

   ACTION: Approve and authorize the use of digital signatures to sign the Disbursements Report for the month of October, 2022.

3. **Amendment to Memorandum of Agreement Between BBC, LLC and the City of Moscow (ACTION ITEM) - Cody Riddle**

   Rich Beebe, representing BBC LLC has requested a modification to an existing Memorandum of Agreement between his organization and the City of Moscow. The only change proposed is to extend the deadline for completion of public improvements by six months, or to July 1, 2023.

   PROPOSED ACTIONS: Review draft Amendment to Memorandum of Agreement and recommend approval, or provide staff further direction.

4. **Finley Buttes Fuel Relief (ACTION ITEM) - Tim Davis**

   The City of Moscow has received a request from Finley-Buttes Limited Partnership for fuel relief due to unanticipated and significant increases in diesel fuel costs. The City of Moscow and Finley-Buttes Limited Partnership entered into an agreement for Transportation and Disposal of Moscow's municipal solid waste in November of 2019. The agreement allows for such amendments at the City's discretion. Upon review of this request, staff determined that the request for fuel relief is reasonable and has developed a fuel model that provides a fair and predictable method of accounting for fuel cost volatility that provides both reimbursement of excessive fuel expenses to Finley-Buttes and provides a credit to the City of Moscow when there is a reduction to fuel prices.

   PROPOSE ACTIONS: Recommend approval of the fuel adjustment amendment to the

Agreement for Solid Waste Transportation and Disposal with Finley-Buttes Limited Partnership; or provide staff further direction.

5. **Almon Asbury Alley Paving Project Bid Award (ACTION ITEM) - Bob Buvel**

   This project consists of the paving of the alley between Almon Street and Asbury Street from Sixth Street north to the existing pavement at Third Street. The project also includes the replacement of approximately 1200 linear feet of existing sanitary sewer main and installation of storm water collection and conveyance. Bids were opened on Thursday, November 15, 2022. Three bids were received, ranging from $656,011.00 to $692,706.75. Motley - Motley, Inc was found to be the lowest responsive bid with a bid total of $656,011.00. The full bid tabulation is attached to the Committee packet.

   PROPOSED ACTIONS: Recommend acceptance of the low bid from Motley - Motley, Inc., award the contract for the bid amount of $656,011.00, and authorize staff approval of construction change orders in an amount not to exceed 10% of the contract amount, or provide staff further direction.

6. **Updated Personnel Policies Adoption (ACTION ITEM) - Bill Belknap**

   Over the last year, the City has been working to update and modernize the City's Personnel Policies to reflect current employment laws and regulations and benefit programs. The Council has reviewed and approved all of the substantive changes to the policies on a section-by-section basis. Staff has compiled the changes into a single document for the Council's review and approval by Resolution.

   PROPOSED ACTIONS: Recommend approval of the proposed Personnel Policies and the associated Resolution, or provide staff further direction.

ADJOURN

NOTICE: It is the policy of the City of Moscow that all City-sponsored public meetings and events are accessible to all people. If you need assistance in participating in this meeting or event due to a disability under the ADA, please contact the City's ADA Coordinator by phone at (208) 883-7600, TDD (208) 883-7019, or by email at adacoordinator@ci.moscow.id.us at least 48 hours prior to the scheduled meeting or event to request an accommodation. The City of Moscow is committed to ensuring that all reasonable accommodation requests are fulfilled.

Public Works / Finance Committee

Regular Meeting
~Minutes~

www.ci.moscow.id.us

Laurie M. Hopkins
City Clerk

208.883.7015

Monday **October 10, 2022**	**4:00 PM**	**Council Chambers** **206 E. Third St.**

The meeting was called to order at 4:00 p.m.

PRESENT: Hailey Lewis, Gina Taruscio, Maureen Laflin
OTHERS: Mayor Arthur Bettge, Council Member Sandra Kelly, Council Member Julia Parker
STAFF: Bill Belknap, Cody Riddle, Sarah Banks, Mia Bautista, David Schott, Todd Drage, Mike Ray, Taylor Riedner

REGULAR AGENDA

1. **Approval of Public Works/Finance Committee September 26, 2022 Minutes (ACTION ITEM) - Taylor Riedner**

The minutes were approved as presented.

2. **Disbursement Report September 2022 (ACTION ITEM) - Sarah Banks**

   Presentation of the Accounts Payable Report for the month ending September, 2022.

   ACTION: Approve and authorize the use of digital signatures to sign the Disbursements Report for the month of September 2022.

Banks introduced the item by highlighting major expenditures including a Booster Station Phase 2 payment, 5 payments for ARPA non-profit agreements, police facility construction payment #22, Ice Rink $1 million contribution, purchase of a new dump bed and sander vehicle with a 10" conveyor spreader, D St and Mountain View, and B St and Cleveland improvements, payments for asphalt rubber chip seal, Indian Hills Park restroom purchase, water and street improvements to 6th St bridge. The Committee authorized the use of digital signatures, recommended approval and that it be placed on the Council consent agenda.

3. **Woodbury 1st Addition Final Planned Unit Development and Final Plat (ACTION ITEM) - Mike Ray**

   On September 20, 2021, City Council approved the Woodbury 1st Addition annexation, Comprehensive Plan land use designation, zoning designation, and PUD with no conditions and approved the preliminary plat with three conditions. On September 1, 2022, the applicant submitted the final plat and final PUD to be reviewed by the Planning and Zoning Commission and City Council. As the City's consultant HDR's water modeling memorandums indicates, additional water distribution infrastructure will be required if/when Phase III of the 1st Addition and future Additions are constructed. Additionally, as demonstrated in the Comprehensive Sewer System Plan, a segment of sewer main will require correcting as a part of the 1st Addition's Phase III construction and for future Woodbury Additions. The completion of these water and sewer components prior to Phase III has been specified in the subdivision's civil design plan set and will be a condition of the Woodbury 1st Addition Development Agreement. The Planning and Zoning Commission reviewed the final subdivision plat and final PUD at their meeting on September 28, 2022 and recommended approval to City Council with the condition that the developer shall design and construct all necessary infrastructure and will not proceed until said infrastructure is completed, installed, and accepted by the City for each phase of the subdivision in accordance with the approved development agreement.

DRAFT

PROPOSED ACTIONS: Recommend approval of the Woodbury 1st Addition Final PUD and Final Plat with the condition that the developer shall design and construct all necessary infrastructure and will not proceed until said infrastructure is completed, installed, and accepted by the City for each phase of the subdivision in accordance with the approved development agreement; or take such other action deemed appropriate.

Ray introduced the item as written above and provided background on the project to date. The final subdivision has increased from 74 to 79 total lots. The four lot types include Neighborhood Business, Cottage, Garden Lots and Estate Lots. Additional 25 off-street public parking spaces have been included as well. The park and other green spaces in the development will be maintained by a Home Owners Association (HOA) making it a private park but still accessible by the public. Ashton Lane on the south end of the development has been changed from a private one-way street to a public one-way street. The stormwater detention pond to the southwest corner will help direct water run-off.

Mark Wintz (Developer) explained the transition from Ashton Circle being a private lane to a public one-way. Local residents have shared concern regarding heavy equipment through residential areas. Wintz recalled there being no requirement to have vehicles accessing the development in a certain route and they will take what is easiest. Finally, he explained the "water-wise" landscaping or xeroscaping intentions with each of the lots.

The Committee recommended approval and that it be placed on the Council regular agenda.

4. Woodbury 1st Addition Monumentation Agreement (ACTION ITEM) - Todd Drage

Woodbury Land LLC, has submitted to the City a final plat for the development of a property at the current northern extent of Slonaker Drive. On September 20, 2021, the City Council approved the preliminary plat for this property. The final plat is titled Woodbury 1st Addition and will be presented for City Council approval on Monday, October 10, 2022. If Council approves the final plat, the interior property corners will not be set until after the final plat has been filed, the earthwork has been completed, and the utilities have been installed. In such instances, an agreement obligating the establishment of these interior corners is required by Idaho Code.

PROPOSED ACTIONS: Recommend approval of the monumentation agreement with Woodbury Land LLC for Woodbury 1st Addition; or provide staff further direction.

Drage introduced the item as written above and reviewed the standard language agreement. Belknap reviewed the purpose of having a monumentation agreement with the development. Needing no further discussion, the Committee recommended approval and that it be placed on the Council consent agreement.

5. Woodbury 1st Addition Development Agreement (ACTION ITEM) - Todd Drage

Woodbury Land LLC, has submitted to the City a final plat for the development of a property at the current northern extent of Slonaker Drive. On September 20, 2021, the City Council approved the preliminary plat for this property. The final plat is titled Woodbury 1st Addition and will be presented for City Council approval on Monday, October 10, 2022. If the final plat is approved by the City Council, a development agreement is necessary to address construction of public improvements, parkland dedication, and as-constructed drawings. The agreement included in the packet covers these items.

PROPOSED ACTIONS: Recommend approval of the Development Agreement with Woodbury Land LLC for the Woodbury 1st Addition; or provide staff further direction.

Drage introduced the item as written above and shared the standard language agreement. Some additions include parkland dedication, left turn lane from Mountain View Rd to Slonaker, roadway and frontage improvements, and the sewer and water infrastructure improvements as mentioned during item 3. The Committee recommended approval and that it be placed on the Council consent agenda.

DRAFT

6. **Virgil Phillips Farm Property Lease Agreement Renewal (ACTION ITEM) - David Schott**

   The City of Moscow owns Virgil Phillips Farm. However, Latah County has leased the property "for the benefit and use of the children of Moscow, Idaho for recreational purposes" since April 19, 2000. The property is currently managed by Latah County Parks and Recreation. City of Moscow staff have been happy with this arrangement and have drafted a lease agreement for the next five years from October 1, 2022, through September 30, 2027. In exchange for Latah County Parks and Recreation managing the property, the City agrees to pay $5,000 per year to assist with the expenses related to the maintenance and operation of Virgil Phillips Farm.

   PROPOSED ACTIONS: Recommend approval of the proposed lease agreement between the City of Moscow and Latah County to lease Virgil Phillips Park from October 1, 2022 to September 20, 2027; or provide staff further direction.

Schott introduced the item as written above and reviewed the use and management agreement the City has with the County. The new agreement has been reviewed and approved by Latah County and the Latah County Board of Commissioners. Should there ever be a need to install a turning lane to the entrance, the Idaho Transportation Department would be responsible. Currently, Phillips Farm is beginning construction to add bike paths throughout the area. The Committee recommended approval and that it be placed on the Council consent agenda.

7. **Recommendation to Name Pickleball Courts at Ghormley Park "Damon Burton Pickleball Courts" (ACTION ITEM) - David Schott**

   The Parks and Recreation Commission received a letter dated February 15, 2022, requesting to recommend officially naming the Ghormley Park pickleball courts the ”Damon Burton Pickleball Courts.” Resolution 2004-19 allows for facilities within parks (i.e., playgrounds, picnic shelters, etc.) to be named separately from the parks and recreational facilities they are in, subject to general approval. On May 26, 2022, the Parks and Recreation Commission approved the beginning of a 60-day public comment period for the proposed "Damon Burton Pickleball Courts" as required under Resolution 2004-19. The public notice was published in the Daily News on June 18, 2022, and July 16, 2022. No public comments were received. The Parks and Recreation Commission considered and recommended approval to officially name the pickleball courts at Ghormley Park the "Damon Burton Pickleball Courts" during their August 25, 2022 meeting.

   PROPOSED ACTIONS: Recommend approval to officially name the pickleball courts at Ghormley Park the "Damon Burton Pickleball Courts"; or provide staff further direction.

Schott introduced the item as written above and shared Damon Burton's involvement with the community and 30 years of dedication to the Parks and Recreation Commission. Fiscal impact for this item includes installation of a new sign which will come from the Parks budget. The Committee recommended approval and that it be placed on the Council consent agenda.

REPORTS

Staff Report (if needed)

No report needed.

ADJOURN

The meeting adjourned at 4:50 p.m.

DRAFT

COMMITTEE STAFF REPORT

DATE: Monday, November 28, 2022

RESPONSIBLE STAFF

Sarah Banks, Finance Director

ADDITIONAL PRESENTER(S) OTHER RESOURCES

AGENDA ITEM TITLE

Disbursement Report October 2022 (ACTION ITEM) - Sarah Banks

DESCRIPTION

Accounts Payable Report for the month ending October 31, 2022. A summary of the major expenditures has been approximated by category and represents 96% of the total expenditure of $4,416,087.85.

Payroll	$1,158,083.00
FY22 Professional Services	$161,804.00
FY23 Professional Services	$191,160.00
FY22 Sanitation	$335,677.00
FY22 Capital Outlay	$368,539.00
FY23 Capital Outlay - Vehicles	$4,096.00
FY22 Capital Outlay - Improvements	$807,847.00
FY23 Capital Outlay - Improvements	$53,075.00
FY22 Capital Outlay -Buildings	$36,757.00
Supplies	$131,393.00
FY22 Utilities	$79,890.00
Minor Equipment	$26,438.00
Contractual Payments	$674,677.00
ACH Wells Fargo	$58,113.00
Insurance	$150,781.00
Total	**$4,238,330.00**

STAFF RECOMMENDATION

Approve the disbursement report and use of digital signatures to sign the Disbursements Report for the month of October, 2022.

PROPOSED ACTIONS

ACTION: Approve and authorize the use of digital signatures to sign the Disbursements Report for the month of October, 2022.

FISCAL IMPACT

PERSONNEL IMPACT

ATTACHMENTS

1. Disbursement Report October 2022

2. October Revenue Report 2022
3. Cash & Investments October 2022
4. Major Expenditures Report October 2022

DISBURSEMENTS REPORT FOR OCTOBER 2022

	FUND NAME	ACCOUNTS PAYABLE	ACCOUNTS PAYABLE	ACCOUNTS PAYABLE	ACCOUNTS PAYABLE	ACCOUNTS PAYABLE	ACCOUNTS PAYABLE	ACCOUNTS PAYABLE	WELLSFARGO CC ACH	WELLSFARGO CC ACH	ACCOUNTS PAYABLE ACH	VOID CHECKS	PAYROLL	PAYROLL	GRAND TOTALS
			FY2022		FY2022		FY2022		FY2022		FY2022				
DATE		10/6/2022	10/6/2022	10/13/2022	10/13/2022	10/20/2022	10/20/2022	10/27/2022	10/10/2022 10/24/2022	10/10/2022 10/24/2022	10/14/2022		10/7/2022	10/21/2022	
BATCH #		AP 10.6.2022	AP 10.5.2022	AP 10.13.2022	AP 10.12.2022	AP 10.20.2022	AP 10.19.2022	AP 10.28.2022	AP 9.30.2022 AP 9.30.2022	AP 10.7.2022 AP 10.21.2022	AP 10.14.2022		ID53	ID54	
CHECK #'s		103183-103215	103216-103294	103295-103332	103333-103391	103392-103439	103440-103450	103451-103509	September CC ACH's	October CC ACH's	September ACH's		21544-21545	21546-21547	
Fund #															
101	GENERAL	277,754.07	52,482.42	7,459.41	31,138.46	7,118.32		47,307.46	15,661.76	12,168.43			349,914.15	346,558.83	**1,147,563.31**
105	STREETS	52,818.23	28,145.96	200.20	23,434.88	533.01		111,594.40	51.78				27,478.82	30,492.53	**274,749.81**
120	RECREATION AND CULTURE	22,425.85	5,764.48	3,644.09	22,445.46	5,711.09	6,000.69	6,744.50	10,577.81	3,881.13			55,562.96	57,926.17	**200,684.23**
121	MSD COMM. PLAY FIELDS	421.68	560.40	241.80	1,827.97								2,734.42	3,503.94	**9,290.21**
123	1912 CENTER	1,089.66	21,180.00	10,750.00											**33,019.66**
128	TRANSIT CENTER	1,089.66	3,106.93		7.96			230.16							**4,434.71**
220	WATER	83,753.20	11,599.90	55,776.89	41,056.21	374.30	22,216.50	9,474.67	509.84	1,542.15			41,261.40	42,511.70	**310,076.76**
230	SEWER	47,329.18	33,545.68	818.32	31,973.94	4,606.43	568.00	65,371.56	2,241.59	2,570.33	18,131.38		47,814.87	49,490.59	**304,461.87**
235	STORMWATER	10,138.63	4,088.01	182.78	1,618.75			40.00	1,505.13				12,582.13	13,092.44	**43,247.87**
240	SANITATION	1,393.22	81.73	929.20	109,709.53	209.40		201.68	47.96		208,629.57		7,278.86	7,475.01	**335,956.16**
290	FLEET	6,003.30	10,292.40	21,577.06	6,257.32	13,414.79	658.35	3,193.27	2,567.54				11,466.63	12,025.01	**87,455.67**
295	INFORMATION SYSTEMS	47,266.93	92.35	165,226.67	1,042.76	73,106.43			4,002.89	784.55			19,041.92	19,870.77	**330,435.27**
320	WATER CAPITAL PROJECTS		156,075.61		67,364.79		144,675.50								**368,115.90**
330	SEWER CAPITAL PROJECTS		631,723.97		4,207.50										**635,931.47**
335	STORWATER CAPITAL PROJ														**0.00**
340	SANITATION CAPITAL PROJ				126,000.00										**126,000.00**
350	CAPITAL PROJECTS		21,178.12		156,579.74		26,907.09								**204,664.95**
355	LID CONSTRUCTION														**0.00**
380	HAMILTON - PARKS & REC														**0.00**
590	BONDS & INTEREST														**0.00**
	TOTAL	**551,483.61**	**979,917.96**	**266,806.42**	**624,665.27**	**105,073.77**	**201,026.13**	**244,157.70**	**37,166.30**	**20,946.59**	**226,760.95**	**0.00**	**575,136.16**	**582,946.99**	**4,416,087.85**

Maureen Laflin

Sarah L. Banks, Finance Director

Gina Taruscio

Hailey Lewis

RECEIPTS REPORT FOR OCTOBER 2022

Fund #	FUND NAME	Taxes	Franchise Fees	Licensee & Permits	Intergovernmental	Charges for Services	Fines & Penalties	Investment Income	Refunds & Reimbursements	Contributions & Donations	Other	Grand Total
101	GENERAL	0.00	121,702.10	195,705.50	2,914,199.79	194,165.23	8,180.00	64,565.03	3,545.68	2,505.00	5,123.20	3,509,691.53
105	STREETS	0.00	0.00	0.00	0.00	24,755.83	0.00	0.00	619.40	0.00	0.00	25,375.23
120	RECREATION AND CULTURE	0.00	0.00	0.00	3,908.00	15,215.34	0.00	0.00	1,663.69	988.00	0.00	21,775.03
121	MSD COMMUNITY PLAY FIELDS	0.00	0.00	0.00	6,245.30	0.00	0.00	0.00	0.00	0.00	0.00	6,245.30
123	1912 CENTER	0.00	0.00	0.00	0.00	0.00	0.00	0.00	0.00	0.00	0.00	0.00
128	TRANSIT CENTER	0.00	0.00	0.00	0.00	22,109.69	0.00	0.00	0.00	0.00	0.00	22,109.69
220	WATER	0.00	0.00	0.00	0.00	615,991.38	0.00	0.00	443.40	0.00	0.00	616,434.78
230	SEWER	0.00	0.00	0.00	0.00	964,631.57	0.00	0.00	0.00	0.00	0.00	964,631.57
235	STORMWATER	0.00	0.00	0.00	0.00	60,436.15	0.00	0.00	0.00	0.00	0.00	60,436.15
240	SANITATION	0.00	0.00	0.00	0.00	507,531.05	0.00	0.00	0.00	0.00	0.00	507,531.05
290	FLEET	0.00	0.00	0.00	0.00	81,477.30	0.00	0.00	0.00	0.00	0.00	81,477.30
295	INFORMATION SYSTEMS	0.00	0.00	0.00	0.00	139,605.00	0.00	0.00	0.00	0.00	0.00	139,605.00
320	WATER CAPITAL PROJECTS	0.00	0.00	0.00	0.00	0.00	0.00	0.00	0.00	0.00	0.00	0.00
330	SEWER CAPITAL PROJECTS	0.00	0.00	0.00	0.00	0.00	0.00	0.00	0.00	0.00	0.00	0.00
335	STORMWATER CAPITAL FUND	0.00	0.00	0.00	400,000.00	0.00	0.00	0.00	0.00	0.00	0.00	400,000.00
340	SANITATION CAPITAL PROJECTS	0.00	0.00	0.00	0.00	0.00	0.00	0.00	0.00	0.00	0.00	0.00
350	CAPITAL PROJECTS	0.00	0.00	0.00	0.00	0.00	0.00	0.00	0.00	0.00	0.00	0.00
355	LID CONSTRUCTION	0.00	0.00	0.00	0.00	0.00	0.00	0.00	0.00	0.00	0.00	0.00
380	HAMILTON P&R	0.00	0.00	0.00	0.00	0.00	0.00	0.00	0.00	0.00	0.00	0.00
590	BOND & INTEREST	0.00	0.00	0.00	0.00	0.00	0.00	0.05	0.00	0.00	0.00	0.05
595	LID FUNDS	0.00	0.00	0.00	0.00	0.00	0.00	0.00	0.00	0.00	0.00	0.00
	TOTAL	**0.00**	**121,702.10**	**195,705.50**	**3,324,353.09**	**2,625,918.54**	**8,180.00**	**64,565.08**	**6,272.17**	**3,493.00**	**5,123.20**	**6,355,312.68**

City of Moscow
Cash and Investments
Balances as of 10/31/2022

Fund		Year to Date Balance
General Fund	$	10,248,822.04
Street Fund	$	3,329,918.32
Culture & Recreation	$	1,353,378.02
MSDCPF	$	192,121.94
1912 Fund	$	42,099.60
Transit Center	$	52,079.39
Water Fund	$	3,173,565.66
Sewer / WRRF	$	4,734,502.69
Stormwater	$	68,251.22
Sanitation Fund	$	3,462,763.40
Fleet Fund	$	6,419,713.14
Information Systems	$	4,847,024.58
Water Capital	$	6,448,556.39
Sewer Capital	$	16,139,275.69
Stormwater Capital	$	458,545.72
Capital Projects	$	5,763,046.97
Sanitation Capital	$	6,877,860.33
LID construction	$	24,580.09
Hamilton	$	787,438.60
Bond & Interest	$	417,457.05
LID Funds	$	34,687.97
Payroll Service	$	1,098,609.51
Total Cash & Investments	**$**	**75,974,298.32**

Major Expenditures for October 2023

FY22 Professional Service

FY22 Aspect Consulting, LLC Professional services for phase 3 stormwater fee study 7.30-9.30.2022	$ 7,089.75
FY22 Aspect Consulting, LLC Paradise Creek Flood Hazard Mitigation Study	$ 5,821.96
FY22 Gropp, LLC City Hall HVAC preventative maintenance and new furnace	$ 5,468.35
FY22 Inland North Waste NMSW cell final closure	$ 126,000.00
FY22 I-U-B Engineers, Inc. Adopt ISPWC - Task order 5	$ 3,298.27
FY22 Auto Body Super Center Vehicle damage repair 7-10; claim#16378; deductible paymen	$ 2,500.00
FY22 HDR Engineering, Inc. Task order #4 miscellaneous, Moscow system modeling	$ 9,126.00
FY22 University Collision Vehicle damage repair 7-04; claim#16072; deductible payment	$ 2,500.00
	$ 161,804.33

FY23 Professional Service

FY23 Clearwater Economic Development Association 2023 CEDA Membership Investment	$ 7,796.00
FY23 Duke's Root Control, Inc. Sewer Maintenance	$ 31,448.20
FY23 Idaho North Central District Environmental Services INCD Public Health	$ 7,553.00
FY23 Idaho State Police Whitcom Access and User Fees Quarterly Oct. - Dec. 2022	$ 3,231.25
FY23 Schindler Elevator Corporation Police Department annual elevator service contract	$ 3,481.93
FY23 Wilbur Fletcher, Inc. Painting of the Vista Tank	$ 48,000.00
FY23 Wilbur Fletcher, Inc. Inspection of the Vista tank	$ 7,000.00
FY23 POE Asphalt Paving, Inc. Palouse Rvr Dr, Indian Hills Dr & White Ave projects (Rolled from FY22)	$ 82,650.00
	$ 191,160.38

Sanitation

FY22 Finley Buttes landfill Garbage	$ 108,915.60
FY22 Latah Sanitation (ACH Payment) Monthly LSI Billing for September 2022	$ 226,760.95
	$ 335,676.55

Utilities

FY22 Avista Utilities September 2022	$ 79,890.40
	$ 79,890.40

Payroll

$ 1,158,083.15

FY22 Capital Outlay- Improvements

FY22 M.L. Albrich & Sons. Inc. South US95 Water Sewer Ext. Pay App 5	$ 372,916.04
FY22 M.L. Albrich & Sons, Inc. South US95 Water Sewer Ext. Pay App 6	$ 306,740.30
FY22 M.L. Albrich & Sons. Inc. South US95 Water Sewer Ext. Pay App 7	$ 36,972.38
FY22 Gropp, LLC 1912 Center HVAC replacement, Friendship Hall & Welcome Room	$ 21,180.00
FY22 Western Constructions of Lewiston Additional water main work near roundabout at 6th & Mtn. View	$ 70,038.66
	$ 807,847.38

FY22 Capital Outlay

FY22 I-U-B Engineers. Inc. Booster Station Phase II - Bid and Construction Management	$ 7,682.69
FY22 I-U-B Engineers, Inc. 6th Street Bridge - Task 1 & 3	$ 49,872.66
FY22 Razz Construction. Inc. 6th St. Bridge over Paradise Creek - Water & Street Improvements	$ 155,827.53
FY22 Welch-Comer Engineer Well House 6 rebid, Construction Phase services	$ 10,480.13
FY22 T M L Construction, Inc. Well house #6 replacement	$ 144,675.50
	$ 368,538.51

Supplies

FY22 Phillip R. Stradley For cl2 and SO2 room Chlorine & SO2 analyzers	$ 2,627.80
FY22 Newman Signs. Inc. Fort Russell District signs	$ 3,847.44
FY22 Newman Signs, Inc. Restock traffic control signs	$ 12,355.21
FY22 Thatcher Company of Montana Aluminum Sulfate	$ 8,114.56
FY22 Traffic Safety Supply Co., Inc. Orange traffic cones (100 @ $20.75/each)	$ 2,554.00
FY22 Uniform2Gear. Inc. Carriers (13)	$ 2,878.20
FY22 Autozone, Inc. Tire Chain Links (500 @ $9.30/each)	$ 4,650.00
FY22 BSN Sports. LLC Rec. Softball uniforms summer 2022	$ 4,566.00
FY22 Hydro Specialties Company, LLC ERT's & install kits for meters	$ 7,782.00
FY22 L.N Curtis & Sons Firefighter Boots & gloves	$ 5,160.90
FY22 Mallory Safety & Supply, LLC Safety Harness	$ 2,659.80
FY22 W.M. Smith and Associates, Inc. HLAC Chlorine	$ 4,834.80
FY23 Coleman Oil Co. Diesel fuel (4,499 gals @ $4.14/each)	$ 18,612.52
FY23 Oxarc. Inc. Chlorine and SO2	$ 4,770.99
FY23 D & L Supply Company Sewer Sanitary lids	$ 3,070.00
FY23 H.D Fowler Company 2" setters for 2" meters	$ 5,790.60
FY23 K C Enterprises Reversable jersey's for sports activities	$ 3,208.14
FY23 Motley-Motley, Inc. Asphalt for Almon Street project (Rolled over from FY2022)	$ 28,870.00
FY23 Oxarc, Inc. Chlorine and SO2	$ 5,040.00
	$ 131,392.96

Contractual Payments

Alta Science and Engineering, Inc. - **FY22**	$ 13,090.50
Infosend, Inc. - **FY22**	$ 3,615.00
HRA/Veba Trust - **FY22**	$ 3,655.98
Moscow Volunteer Fire Department - October **FY22**	$ 1,750.00
American Building Maintenance Company - **FY22**	$ 35,731.48
Moscow Volunteer Fire Department - November **FY23**	$ 1,750.00
Humane Society of the Palouse - October **FY23**	$ 4,568.00
Humane Society of the Palouse - November **FY23**	$ 4,568.00
Heart of the Arts - **FY23**	$ 10,750.00
Bitco Software, LLC - **FY23**	$ 10,400.00
University of Idaho-PBAC - **FY23**	$ 47,000.00
Regional Public Transportation, Inc. - **FY23**	$ 32,543.75
Whitcom 911 - **FY23**	$ 174,585.00
University of Idaho Facilities - **FY23**	$ 45,103.74
Electronic Data Collection Corporation - **FY23**	$ 10,500.00
Idaho Department of Environmental Quality - **FY23**	$ 18,729.00
Shi International Corporation - **FY23**	$ 165,016.30
Shi International Corporation - **FY23**	$ 69,611.61
CivicPlus, Inc. - **FY23**	$ 16,063.09
Submittable Holdings, Inc. - **FY23**	$ 5,646.00
	$ 674,677.45

FY22 Capital Outlay - Buildings

FY22 Integrity Electric and Construction Parks and Shop remodel	$ 9,850.00
FY22 Dardan Enterprises. Inc. Paul Mann Building Restoration	$ 26,907.09
	$ 36,757.09

FY23 Capital Outlay - Improvements

FY23 Concrete Conservation. LLC Spectrashield liners installed to 20 Manholes in the City	$ 53,075.00
	$ 53,075.00

ACH Wells Fargo

Commercial Card Expense - September 30th **FY22**	$ 33,664.72
Commercial Card Expense - October 7th **FY23**	$ 2,692.96
Commercial Card Expense - October 15th **FY22 & FY23**	$ 10,786.74
Commercial Card Expense - October 21st **FY23**	$ 10,968.47
	$ 58,112.89

Insurance

FY23 ICRMP 1/2 premium of annual insurance	$ 150,780.50
	$ 150,780.50

FY23 Capital Outlay- Vehicles

FY23 Clint Trickett dba Premier Vehicle Push bumpers and electronics trays for new cars #4-10 & #4-13 (PD)	$ 4,096.28
	$ 4,096.28

Minor Equipment

FY22 Room to Roam Fencing, LLC Fire Station 2 Fence around draft pit	$ 6,618.01
FY22 Siga. LLC Repair Wilo Mixer	$ 8,300.00
FY22 Cutting Edge Signs MFM Banners update	$ 3,500.00
FY23 Source Electric. Inc. EV Charging Stations (5 @ $1604.00/each)	$ 8,020.00
	$ 26,438.01

Major Expenditures $ 4,238,330.88 96% of the total expenditures of $4,416,087.85

Large Expenditures

FY22 Inland North Waste NMSW cell final closure	$ 126,000.00
FY22 M.L. Albrich & Sons. Inc. South US95 Water Sewer Ext. Pay App 5	$ 372,916.04
FY22 M.L. Albrich & Sons. Inc. South US95 Water Sewer Ext. Pay App 6	$ 306,740.30
FY22 M.L. Albrich & Sons, Inc. South US95 Water Sewer Ext. Pay App 7	$ 36,972.38
FY22 American Building Maintenance Company Janitorial services - June, July, Sept. & missed billing FS3,Haddock, old and new PD	$ 35,731.48
FY22 Western Constructions of Lewiston Additional water main work near roundabout at 6th & Mtn. View	$ 70,038.66
FY22 Dardan Enterprises. Inc. Paul Mann Building Restoration	$ 26,907.09
FY22 I-U-B Engineers. Inc. 6th Street Bridge - Task 1 & 3	$ 49,872.66
FY22 Razz Construction, Inc. 6th St. Bridge over Paradise Creek - Water & Street Improvements	$ 155,827.53
FY22 T M L Construction, Inc. Well house #6 replacement	$ 144,675.50
FY23 ICRMP 1/2 premium of annual insurance	$ 150,780.50
FY23 Duke's Root Control. Inc. Sewer Maintenance	$ 31,448.20
FY23 Wilbur Fletcher. Inc. Painting of the Vista Tank	$ 48,000.00
FY23 POE Asphalt Paving, Inc. Palouse Rvr Dr, Indian Hills Dr & White Ave projects (Rolled from FY22)	$ 82,650.00
FY23 Concrete Conservation, LLC Spectrashield liners installed to 20 Manholes in the City	$ 53,075.00
FY23 Shi International Corporation HP Synergy Servers, Virtual Connect, 2060 SANS, Service to 2025	$ 165,016.30
FY23 Motley-Motley, Inc. Asphalt for Almon Street project (Rolled over from FY2022	$ 28,870.00
FY23 University of Idaho-PBAC Annual research and administrative assessment fees	$ 47,000.00
FY23 Regional Public Transportation. Inc. Quarter 1 SMART Transit Pledge	$ 32,543.75
FY23 Whitcom 911 Quarterly User fees Oct. - Dec.	$ 174,585.00
FY23 University of Idaho Facilities Street Maintenance Agreement 1 of 2	$ 45,103.74
FY23 Shi International Corporation Microsoft Enterprise Corp.	$ 69,611.61
Total:	**$2,254,365.74**

COMMITTEE STAFF REPORT

DATE: Monday, November 28, 2022

RESPONSIBLE STAFF

Cody Riddle, Deputy City Supervisor - Community Development

ADDITIONAL PRESENTER(S)

OTHER RESOURCES

AGENDA ITEM TITLE

Amendment to Memorandum of Agreement Between BBC, LLC and the City of Moscow (ACTION ITEM) - Cody Riddle

DESCRIPTION

In May of 2021, with Council approval, the City entered into a Memorandum of Agreement (MOA) with BBC LLC. The agreement includes a commitment from BBC for a number of infrastructure improvements, specifies the City's financial contributions to the work, and requires completion by December 31, 2022.

Rich Beebe, representing BBC, has requested to extend this deadline by six months. The written request, dated November 3, 2022, cites a number of factors that have delayed the project. The challenges and delays are similar to those impacting other projects across the City. There were delays in material procurement, bridge manufacturing and transport, unforeseen soil conditions, and unfavorable weather early and late in the construction season.

The only change proposed to the agreement is the deadline for completion, specified in Section 3.3. All other provisions remain unchanged.

STAFF RECOMMENDATION

Recommend approval of the modifications to the Memorandum of Agreement.

PROPOSED ACTIONS

PROPOSED ACTIONS: Review draft Amendment to Memorandum of Agreement and recommend approval, or provide staff further direction.

FISCAL IMPACT

PERSONNEL IMPACT

ATTACHMENTS

1. Developer Request
2. Original MOA 5-26-21
3. Amended MOA with BBC with attachment

November 3, 2022

Mayor Bettge
City of Moscow
206 East Third Street
Moscow, Idaho 83843

Re: **Extension Request** for the Memorandum of Agreement between BBC LLC and the City of Moscow, Idaho, recording number 615349

Honorable Mayor Bettge,

I'm writing this letter to request a six (6) month extension of the Memorandum of Agreement between BBC LLC and the City of Moscow, Idaho, recording number 615349. Due to unanticipated construction delays we may be unable to pave the roads by December 31, 2022. As you are aware the construction window for paving in Moscow is finite. The following is a list of the unanticipated causes for delay:

1. Bridge design and design approval – bridge design was fast tracked for approval but review processes by the Corps of Engineers, Idaho Department of Water and the City took slightly longer than anticipate since all the above agencies experienced increased workload with decreased staffing.

2. Unforeseen bedrock depth for bridge abutment footing – the bridge footings were designed with the geo-tech report as a guide to depth of bedrock. However, after excavation occurred the depth of road in most places was shallower than expected which required a revised footing design, review and approval.

3. Bridge manufacturing – Contech bridge manufacturing experience some minor setbacks in manufacturing of the bridge components. Bridge completion date is still expected the week of November 14, 2022.

4. Bridge transport – after manufacturing transportation of the bridge is still unknown. We anticipate receiving the bridge the week of Thanksgiving but could be the following week.

5. Inclement weather – lastly, the weather has turned colder which closes some acceptable temperature window for paving and concrete work. It is our intent to have the bridge placed and roadway sub-base constructed before the end of the year. We will continue to take advantage of good weather to leverage every opportunity we can for paving and concrete to expedite the project.

Please consider this extension request.
Do not hesitate to contact me if you have any questions regarding this request.

Sincerely,

Rich Beebe,
BBC LLC

NO. 615349
AT THE REQUEST OF
CITY OF MOSCOW
DATE & HOUR
5-26-2021 10:30
HENRIANNE K. WESTERS
LATAH COUNTY RECORDER
FEE $ Ø BY

MEMORANDUM OF AGREEMENT BETWEEN BBC LLC AND CITY OF MOSCOW, IDAHO

THIS MEMORANDUM OF AGREEMENT BETWEEN BBC LLC AND CITY OF MOSCOW, IDAHO ("MOA") is entered into effective the date of the last signature, by and between City of Moscow, Idaho a municipal corporation of the State of Idaho, 206 East Third Street, Moscow, Idaho 83843 ("CITY") and BBC LLC, a limited liability company of Idaho, PO Box 8525, 4930 Lenville Road, Moscow, Idaho 83843 ("BBC LLC").

WITNESSETH

WHEREAS, CITY's Hamilton Dream Team identified the need for additional athletic playfields in the community and in 2002, the City purchased a 44-acre property specifically for the development of playfields, known as the West Palouse River Drive Ball Fields Project; and

WHEREAS, in 2011, the cost to develop the playfields project and the infrastructure surrounding the playfields was estimated to be over $7.5 million, which included extending Conestoga Street, widening West Palouse River Drive, adding an irrigation system utilizing effluent from CITY's Water Reclamation and Reuse Facility, and the cost to develop the playfields, the City Council determined that the project was cost prohibitive at that time; and

WHEREAS, in 2016 the Moscow School District Community Playfields (located at Joseph Street and Mountain view Road) were opened as a joint project of the CITY and Moscow School District; and

WHEREAS, CITY retained the Palouse River Drive property for future playfield development; and

WHEREAS, CITY received a request from BBC LLC requesting financial participation with a proposed extension of Conestoga Street and the accompanying bridge construction, which would provide public access to CITY's 44-acre West Palouse River Drive property as well as to property owned by BBC LLC; and

WHEREAS, CITY has identified a major challenge area in its strategic plan to address a shortage of affordable housing opportunities within city limits and wishes to encourage BBC LLC to provide housing that would help address the current housing shortage and need for affordable housing; and

WHEREAS, City Council has previously recognized its obligation to extend Conestoga Street through its 44-acre West Palouse River Drive Ball Fields property, and the roadway extension and the resulting access and utility extension to the City's property is a fundamental element needed for the future development of the playfield facilities.

NOW THEREFORE, for and in consideration of the mutual covenants and representations set forth in this MOA, CITY and BBC LLC agree as follows:

SECTION 1: COOPERATION

BBC LLC enters into this Agreement of BBC LLC's own free will and accord, without coercion, without inducement, and at BBC LLC's request. CITY has not made any promises to BBC LLC other than the terms as detailed in this MOA. CITY and BBC LLC are jointly committed to the public improvements identified herein.

SECTION 2: CITY RESPONSIBILITIES

1. CITY agrees to contribute toward the construction of the extension of Conestoga Street to extend from Palouse River Drive to the southern property boundary of the City's playfield property, see Attachment 'A', as follows:
   a. CITY shall reimburse no more than fifty percent (50%) of the actual cost of construction of the Conestoga Street extension improvements, which shall not exceed a total amount of One Million Seventy-Eight Thousand Two Hundred and Ten Dollars ($1,078,210) unless otherwise approved by CITY in writing.
   b. Subject to the amounts and limitations contained in paragraph a. of this section, CITY's contribution will only be utilized to reimburse BBC LLC for the following:
      - bridge construction
      - roadway construction
      - curbing
      - sidewalk on the east side
      - 10' wide asphalt pedestrian pathway on the west side
      - water mains
      - water hydrants
      - sewer mains
      - sewer manholes
      - stormwater catch basins
      - stormwater mains
2. CITY's contribution for the Conestoga Street extension improvements shall not be disbursed until completion of the Conestoga Street extension, bridge, and improvements to West Palouse River Drive and acceptance of said improvements by CITY.

SECTION 3: BBC LLC RESPONSIBILITIES

1. BBC LLC agrees to construct, at BBC LLC's expense, the frontage improvements to the south side of West Palouse River Drive to include installation of curbing, sidewalk and roadway widening to improve West Palouse River Drive to thirty-four (34) feet in width from the intersection with Conestoga Street and continuously extending to US 95/South Main Street.
2. BBC LLC agrees to furnish to CITY, at BBC LLC's expense, engineering design plans (for the public improvements) prepared by an Idaho Licensed Professional Engineer. Such plans shall be approved by the Moscow City Engineer prior to beginning any public improvements' construction.
3. BBC LLC agrees that BBC LLC shall construct the public improvements described in Section 3 of this Agreement, by December 31, 2022.

4. All public improvements, once constructed and accepted by CITY for ownership and maintenance, shall remain free of defects in materials and workmanship for a period of one (1) year following the date of CITY's written acceptance of such public improvements (i.e., warranty period).
5. BBC LLC shall be responsible, at its sole expense, for correcting any and all deficiencies which occur within the one (1) year warranty period.

SECTION 4: TERM

This MOA shall take effect when both parties have signed it and shall remain in full force and effect in accordance with all of its terms and conditions as stated herein.

SECTION 5: GENERAL PROVISIONS

1. Indemnification. BBC LLC agrees to indemnify, defend, and hold harmless CITY, its officers, agents, employees, and engineers, from and against any and all losses, lawsuits, actions, claims, judgements for damages, or any injuries or damages received or sustained by any person, persons, or property, and losses, expenses, and other costs, including litigation costs and attorney's fees, arising out of, resulting from, or in connection with the acts and/or any performances, activities, errors or omissions by BBC LLC, BBC LLC's servants, agents, officers, employees, representatives, guests, business invitees or its subcontractors; or on account of or in consequence of any neglect in safeguarding the work; or through use of unacceptable materials in constructing the work; or because of any claims or amounts recovered from any infringements of patent, trademark or copyright; or from any claims or amounts arising out of or recovered under the Workmen's Compensation Act or any other law, ordinance, order, or decree..

2. Insurance. BBC LLC shall not commence work until proof of insurance is provided that is sufficient for the work to be completed under this Agreement. Each policy and/or certificate of insurance shall list CITY as an additional insured and shall have a provision on the policy that it shall not be subject to cancellation, or reduction in the amounts of its liabilities, or any other material change, until notice has been given in writing to CITY and not less than fifteen (15) days prior to such action.

3. Entire Agreement, Modification and Assignability. This Agreement and the exhibits hereto contain the entire Agreement between the Parties, and no statements, promises, or inducements made by either Party, or agents of either Party are valid or binding unless contained herein. This Agreement may not be enlarged, modified or altered except upon written agreement signed by the Parties hereto. BBC LLC may not subcontract or assign its rights or duties arising hereunder, other than as provided herein, without the prior written consent and express authorization of CITY.

4. No Joint Venture and No Joint Powers Agreement. Nothing contained in this MOA shall be in any way construed as creating, expressing or implying that the Parties have joined together in any joint venture partnership or agency relationship or in any manner have agreed to or

are contemplating the sharing of profits and losses among themselves in relation to any matter relating to this MOA.

5. No Employer-Employee or Agency Relationship. The Parties warrant by their signatures that no employer-employee or agency relationship is established between BBC LLC and CITY by the terms of this Agreement.

6. Interpretation. This MOA shall be deemed and construed to have been prepared mutually by each Party and any uncertainty or ambiguity existing therein shall not be construed against any Party.

7. Compliance with Laws. BBC LLC shall observe and comply with all Federal, State, and Local laws, codes, ordinances, and regulations, including all licensing and permit requirements which, in any manner, apply to the work being performed under this agreement. No pleas of misunderstanding or ignorance on the part of the BBC LLC will in any way serve to modify the provisions of this requirement.

8. Jurisdiction and Venue. This MOA shall be construed under and governed by the laws of the State of Idaho. In event of litigation concerning this MOU, venue shall be the District Court of the Second Judicial District of the State of Idaho, in and for the County of Latah.

9. Non-Appropriations. This Agreement is contingent upon CITY receiving the necessary funding to cover the obligations of CITY. In the event that such funding is not received or appropriated, then, and in that event, CITY's obligations under this Agreement shall cease and each Party shall be released from further performance under this Agreement without any liability to the other Party.

10. Notice. All communication or notification to be given pursuant to this MOA shall be given to the following:

Notice to BBC LLC:	Notice to CITY:
Richard C. Beebe, Jr., Manager	Moscow City Supervisor
PO Box 8525	PO Box 9203
4930 Lenville Road	206 East Third Street
Moscow, ID 83843	Moscow, ID 83843-1703

11. Complete Agreement. This MOA constitutes the entire expression of intent and agreement of the Parties and supersedes all prior agreements or understandings, written or oral, with respect thereto.

12. Amendments. The terms of this MOA may be amended by mutual agreement of the Parties. The Party seeking an amendment shall submit a written request for amendment to the other Party. The request shall clearly describe the proposed change and why the change is necessary. The responding Party shall schedule a review of the request within thirty (30) days from receipt of the request and shall respond within sixty (60) days from receipt of the request. The responding Party may approve, deny, or suggest modifications to the

amendment. Any amendment shall be in writing, shall refer specifically to this MOA, and shall be executed by both Parties.

IN WITNESS WHEREOF, BBC LLC and CITY, by and through their respective officials designated below, have signed this MOA on the date following their respective signatures.

BBC LLC

Richard C. Beebe, Jr.
Manager

5/24/21
Date

CITY OF MOSCOW

Bill Lambert
Mayor

05/25/2021
Date

ATTEST:

Laurie M. Hopkins, City Clerk

Approved as to Form:

Mia Bautista, City Attorney

ACKNOWLEDGMENT

STATE OF IDAHO)
) ss.
COUNTY OF LATAH)

On this 24th day of May, 2021, before me, a Notary Public in and for said State, appeared Richard C. Beebe, Jr., known to me to be the person named above and acknowledged that he executed the foregoing document as the duly authorized representative of BBC LLC.

Notary Public for the State of Idaho
Residing at Moscow
My commission expires 8/15/2025

Attachment A

615349

Attachment 'A'

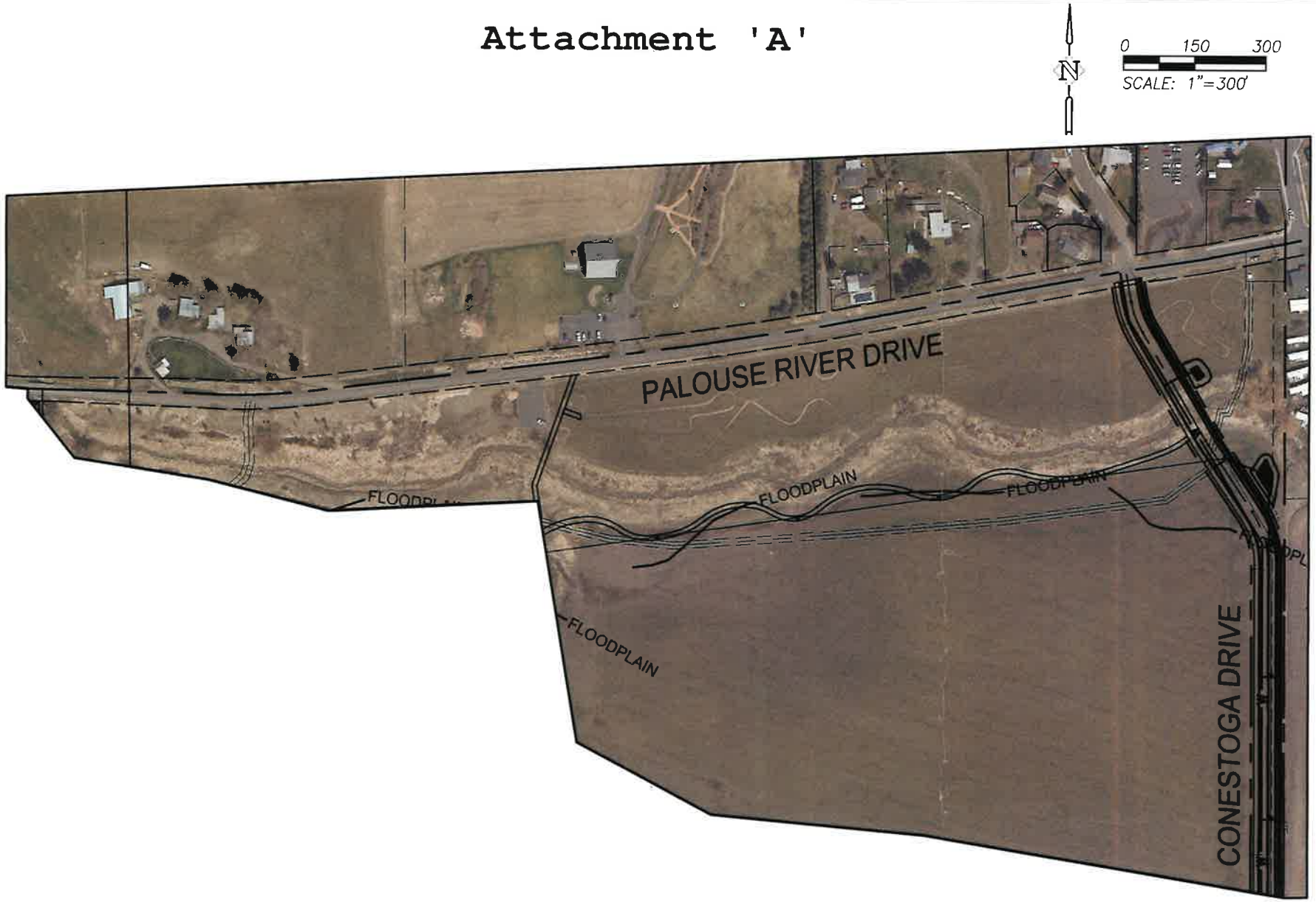

NOT FOR CONSTRUCTION

SHEET NO.	DATE	NO.	DESCRIPTION	DESIGNED: SAS
				DRAWN: SAS
				CHECKED: SAS
JOB NO. BBC-02	R E V I S I O N S			DATE: MAY 18, 2021

SYNTIER Engineering, Inc.
405 SE Bishop Blvd, Suite 2 Pullman, WA 99163
www.SynTierEngr.com 509.339.6187

BALL FIELD IMPROVEMENTS
EDINGTON SUBDIVISION
MOSCOW, IDAHO

AMENDED MEMORANDUM OF AGREEMENT BETWEEN
BBC LLC AND CITY OF MOSCOW, IDAHO

THIS AMENDED MEMORANDUM OF AGREEMENT BETWEEN BBC LLC AND CITY OF MOSCOW, IDAHO ("Amended MOA") is entered into effective the date of the last signature, by and between City of Moscow, Idaho a municipal corporation of the State of Idaho, 206 East Third Street, Moscow, Idaho 83843 ("CITY") and BBC LLC, a limited liability company of Idaho, PO Box 8525, 4930 Lenville Road, Moscow, Idaho 83843 ("BBC LLC").

W I T N E S S E T H:

WHEREAS, CITY and BBC LLC originally executed a Memorandum of Agreement on May 25, 2021, See Attachment "A" (hereinafter MOA) for the purpose of outlining the duties and obligations of each Party as to the public improvements on Conestoga Street and the accompanying bridge construction; and

WHEREAS, the MOA stated a final completion date of public improvements by December 31, 2022; and

WHEREAS, BBC LLC submitted a request to CITY on November 3, 2022 to amend the MOA in anticipation that elements beyond BBC LLC's control have created a delay in the bridge completion by December 31, 2022; and

WHEREAS, the MOA provides for modification upon written agreement signed by the Parties (Section 5, #3 and #12); and

WHEREAS, the Parties intend to modify the MOA through this Amended MOA to accommodate the unforeseen delays to complete bridge construction;

DRAFT

NOW, THEREFORE it is agreed, for and in consideration of the mutual covenants and promise between the Parties hereto, as follows:

Section 3. #3 of the MOA shall be amended so that BBC LLC shall be permitted to construct the public improvements described in Section 3 of the MOU, by July 1, 2023.

All other terms and conditions of the MOA shall remain in full force and effect.

IN WITNESS WHEREOF, BBC LLC and CITY, by and through their respective officials designated below, have signed this Amended MOA on the date following their respective signatures.

BBC LLC

_____

Richard C. Beebe, Jr.
Manager

_____

Date

CITY OF MOSCOW

_____

Arthur D. Bettge
Mayor

_____

Date

ATTEST

_____

Laurie M. Hopkins, City Clerk

Approved As To Form:

_____

Mia Bautista, City Attorney

DRAFT

ACKNOWLEDGMENT

STATE OF IDAHO)
) ss.
COUNTY OF LATAH)

On this _____ day of _____, 2022, before me, a Notary Public in and for said State, appeared Richard C. Beebe, Jr., known to me to be the person named above and acknowledged that he executed the foregoing document as the duly authorized representative of BBC LLC.

_____
Notary Public for the State of Idaho
Residing at_____
My commission expires_____

Attachment A

NO. 615349
AT THE REQUEST OF
CITY OF MOSCOW
DATE & HOUR
5-26-2021 10:30
HENRIANNE K. WESTBERG
LATAH COUNTY RECORDER
FEE $ 0 BY

MEMORANDUM OF AGREEMENT BETWEEN BBC LLC AND CITY OF MOSCOW, IDAHO

THIS MEMORANDUM OF AGREEMENT BETWEEN BBC LLC AND CITY OF MOSCOW, IDAHO ("MOA") is entered into effective the date of the last signature, by and between City of Moscow, Idaho a municipal corporation of the State of Idaho, 206 East Third Street, Moscow, Idaho 83843 ("CITY") and BBC LLC, a limited liability company of Idaho, PO Box 8525, 4930 Lenville Road, Moscow, Idaho 83843 ("BBC LLC").

WITNESSETH

WHEREAS, CITY's Hamilton Dream Team identified the need for additional athletic playfields in the community and in 2002, the City purchased a 44-acre property specifically for the development of playfields, known as the West Palouse River Drive Ball Fields Project; and

WHEREAS, in 2011, the cost to develop the playfields project and the infrastructure surrounding the playfields was estimated to be over $7.5 million, which included extending Conestoga Street, widening West Palouse River Drive, adding an irrigation system utilizing effluent from CITY's Water Reclamation and Reuse Facility, and the cost to develop the playfields, the City Council determined that the project was cost prohibitive at that time; and

WHEREAS, in 2016 the Moscow School District Community Playfields (located at Joseph Street and Mountain view Road) were opened as a joint project of the CITY and Moscow School District; and

WHEREAS, CITY retained the Palouse River Drive property for future playfield development; and

WHEREAS, CITY received a request from BBC LLC requesting financial participation with a proposed extension of Conestoga Street and the accompanying bridge construction, which would provide public access to CITY's 44-acre West Palouse River Drive property as well as to property owned by BBC LLC; and

WHEREAS, CITY has identified a major challenge area in its strategic plan to address a shortage of affordable housing opportunities within city limits and wishes to encourage BBC LLC to provide housing that would help address the current housing shortage and need for affordable housing; and

WHEREAS, City Council has previously recognized its obligation to extend Conestoga Street through its 44-acre West Palouse River Drive Ball Fields property, and the roadway extension and the resulting access and utility extension to the City's property is a fundamental element needed for the future development of the playfield facilities.

NOW THEREFORE, for and in consideration of the mutual covenants and representations set forth in this MOA, CITY and BBC LLC agree as follows:

SECTION 1: COOPERATION

BBC LLC enters into this Agreement of BBC LLC's own free will and accord, without coercion, without inducement, and at BBC LLC's request. CITY has not made any promises to BBC LLC other than the terms as detailed in this MOA. CITY and BBC LLC are jointly committed to the public improvements identified herein.

SECTION 2: CITY RESPONSIBILITIES

1. CITY agrees to contribute toward the construction of the extension of Conestoga Street to extend from Palouse River Drive to the southern property boundary of the City's playfield property, see Attachment 'A', as follows:
   a. CITY shall reimburse no more than fifty percent (50%) of the actual cost of construction of the Conestoga Street extension improvements, which shall not exceed a total amount of One Million Seventy-Eight Thousand Two Hundred and Ten Dollars ($1,078,210) unless otherwise approved by CITY in writing.
   b. Subject to the amounts and limitations contained in paragraph a. of this section, CITY's contribution will only be utilized to reimburse BBC LLC for the following:
      - bridge construction
      - roadway construction
      - curbing
      - sidewalk on the east side
      - 10' wide asphalt pedestrian pathway on the west side
      - water mains
      - water hydrants
      - sewer mains
      - sewer manholes
      - stormwater catch basins
      - stormwater mains
2. CITY's contribution for the Conestoga Street extension improvements shall not be disbursed until completion of the Conestoga Street extension, bridge, and improvements to West Palouse River Drive and acceptance of said improvements by CITY.

SECTION 3: BBC LLC RESPONSIBILITIES

1. BBC LLC agrees to construct, at BBC LLC's expense, the frontage improvements to the south side of West Palouse River Drive to include installation of curbing, sidewalk and roadway widening to improve West Palouse River Drive to thirty-four (34) feet in width from the intersection with Conestoga Street and continuously extending to US 95/South Main Street.
2. BBC LLC agrees to furnish to CITY, at BBC LLC's expense, engineering design plans (for the public improvements) prepared by an Idaho Licensed Professional Engineer. Such plans shall be approved by the Moscow City Engineer prior to beginning any public improvements' construction.
3. BBC LLC agrees that BBC LLC shall construct the public improvements described in Section 3 of this Agreement, by December 31, 2022.

4. All public improvements, once constructed and accepted by CITY for ownership and maintenance, shall remain free of defects in materials and workmanship for a period of one (1) year following the date of CITY's written acceptance of such public improvements (i.e., warranty period).
5. BBC LLC shall be responsible, at its sole expense, for correcting any and all deficiencies which occur within the one (1) year warranty period.

SECTION 4: TERM

This MOA shall take effect when both parties have signed it and shall remain in full force and effect in accordance with all of its terms and conditions as stated herein.

SECTION 5: GENERAL PROVISIONS

1. Indemnification. BBC LLC agrees to indemnify, defend, and hold harmless CITY, its officers, agents, employees, and engineers, from and against any and all losses, lawsuits, actions, claims, judgements for damages, or any injuries or damages received or sustained by any person, persons, or property, and losses, expenses, and other costs, including litigation costs and attorney's fees, arising out of, resulting from, or in connection with the acts and/or any performances, activities, errors or omissions by BBC LLC, BBC LLC's servants, agents, officers, employees, representatives, guests, business invitees or its subcontractors; or on account of or in consequence of any neglect in safeguarding the work; or through use of unacceptable materials in constructing the work; or because of any claims or amounts recovered from any infringements of patent, trademark or copyright; or from any claims or amounts arising out of or recovered under the Workmen's Compensation Act or any other law, ordinance, order, or decree..

2. Insurance. BBC LLC shall not commence work until proof of insurance is provided that is sufficient for the work to be completed under this Agreement. Each policy and/or certificate of insurance shall list CITY as an additional insured and shall have a provision on the policy that it shall not be subject to cancellation, or reduction in the amounts of its liabilities, or any other material change, until notice has been given in writing to CITY and not less than fifteen (15) days prior to such action.

3. Entire Agreement, Modification and Assignability. This Agreement and the exhibits hereto contain the entire Agreement between the Parties, and no statements, promises, or inducements made by either Party, or agents of either Party are valid or binding unless contained herein. This Agreement may not be enlarged, modified or altered except upon written agreement signed by the Parties hereto. BBC LLC may not subcontract or assign its rights or duties arising hereunder, other than as provided herein, without the prior written consent and express authorization of CITY.

4. No Joint Venture and No Joint Powers Agreement. Nothing contained in this MOA shall be in any way construed as creating, expressing or implying that the Parties have joined together in any joint venture partnership or agency relationship or in any manner have agreed to or

are contemplating the sharing of profits and losses among themselves in relation to any matter relating to this MOA.

5. No Employer-Employee or Agency Relationship. The Parties warrant by their signatures that no employer-employee or agency relationship is established between BBC LLC and CITY by the terms of this Agreement.

6. Interpretation. This MOA shall be deemed and construed to have been prepared mutually by each Party and any uncertainty or ambiguity existing therein shall not be construed against any Party.

7. Compliance with Laws. BBC LLC shall observe and comply with all Federal, State, and Local laws, codes, ordinances, and regulations, including all licensing and permit requirements which, in any manner, apply to the work being performed under this agreement. No pleas of misunderstanding or ignorance on the part of the BBC LLC will in any way serve to modify the provisions of this requirement.

8. Jurisdiction and Venue. This MOA shall be construed under and governed by the laws of the State of Idaho. In event of litigation concerning this MOU, venue shall be the District Court of the Second Judicial District of the State of Idaho, in and for the County of Latah.

9. Non-Appropriations. This Agreement is contingent upon CITY receiving the necessary funding to cover the obligations of CITY. In the event that such funding is not received or appropriated, then, and in that event, CITY's obligations under this Agreement shall cease and each Party shall be released from further performance under this Agreement without any liability to the other Party.

10. Notice. All communication or notification to be given pursuant to this MOA shall be given to the following:

Notice to BBC LLC:	Notice to CITY:
Richard C. Beebe, Jr., Manager	Moscow City Supervisor
PO Box 8525	PO Box 9203
4930 Lenville Road	206 East Third Street
Moscow, ID 83843	Moscow, ID 83843-1703

11. Complete Agreement. This MOA constitutes the entire expression of intent and agreement of the Parties and supersedes all prior agreements or understandings, written or oral, with respect thereto.

12. Amendments. The terms of this MOA may be amended by mutual agreement of the Parties. The Party seeking an amendment shall submit a written request for amendment to the other Party. The request shall clearly describe the proposed change and why the change is necessary. The responding Party shall schedule a review of the request within thirty (30) days from receipt of the request and shall respond within sixty (60) days from receipt of the request. The responding Party may approve, deny, or suggest modifications to the

amendment. Any amendment shall be in writing, shall refer specifically to this MOA, and shall be executed by both Parties.

IN WITNESS WHEREOF, BBC LLC and CITY, by and through their respective officials designated below, have signed this MOA on the date following their respective signatures.

BBC LLC

Richard C. Beebe, Jr.
Manager

5/24/21
Date

CITY OF MOSCOW

Bill Lambert
Mayor

05/25/2021
Date

ATTEST:

Laurie M. Hopkins, City Clerk

Approved as to Form:

Mia Bautista, City Attorney

ACKNOWLEDGMENT

STATE OF IDAHO)
) ss.
COUNTY OF LATAH)

On this 24th day of May, 2021, before me, a Notary Public in and for said State, appeared Richard C. Beebe, Jr., known to me to be the person named above and acknowledged that he executed the foregoing document as the duly authorized representative of BBC LLC.

Notary Public for the State of Idaho
Residing at Moscow
My commission expires 8/15/2025

Attachment A

615349

Attachment 'A'

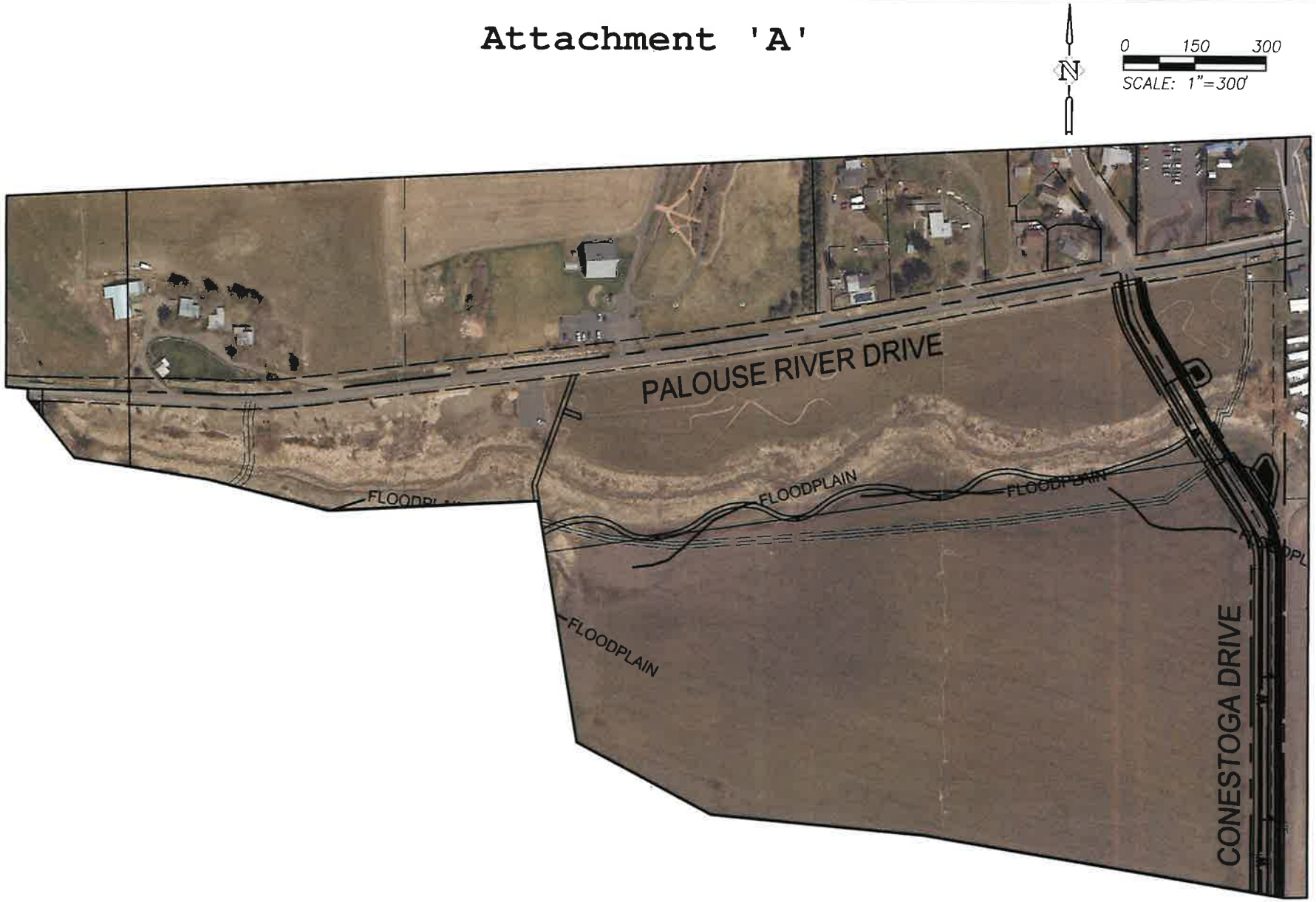

NOT FOR CONSTRUCTION

SHEET NO.	DATE	NO.	DESCRIPTION	DESIGNED: SAS
				DRAWN: SAS
				CHECKED: SAS
JOB NO. BBC-02	R E V I S I O N S			DATE: MAY 18, 2021

SYNTIER Engineering, Inc.
405 SE Bishop Blvd, Suite 2 Pullman, WA 99163
www.SynTierEngr.com 509.339.6187

BALL FIELD IMPROVEMENTS
EDINGTON SUBDIVISION
MOSCOW, IDAHO

COMMITTEE STAFF REPORT

DATE: Monday, November 28, 2022

RESPONSIBLE STAFF

Tim Davis, Sanitation Operations Manager

ADDITIONAL PRESENTER(S)

OTHER RESOURCES

AGENDA ITEM TITLE

Finley Buttes Fuel Relief (ACTION ITEM) - Tim Davis

DESCRIPTION

The City of Moscow has received a request from Finley-Buttes Limited Partnership for fuel relief due to unanticipated and significant increases in diesel fuel costs. The City of Moscow and Finley-Buttes Limited Partnership entered into an agreement for Transportation and Disposal of Moscow's municipal solid waste in November of 2019. The agreement allows for such amendments at the City's discretion. Upon review of this request, staff determined that the request for fuel relief is reasonable and has developed a fuel model that provides a fair and predictable method of accounting for fuel cost volatility that provides both reimbursement of excessive fuel expenses to Finley-Buttes and provides a credit to the City of Moscow when there is a reduction to fuel prices.

STAFF RECOMMENDATION

Approve the fuel adjustment amendment to the Agreement for Solid Waste Transportation and Disposal with Finley-Buttes Limited Partnership.

PROPOSED ACTIONS

PROPOSE ACTIONS: Recommend approval of the fuel adjustment amendment to the Agreement for Solid Waste Transportation and Disposal with Finley-Buttes Limited Partnership; or provide staff further direction.

FISCAL IMPACT

PERSONNEL IMPACT

ATTACHMENTS

1. FirstAmendment_Finley-Buttes_SolidWasteTransporationDisposal_FuelAdjustment_FinalDraft with attachment REDUCED
2. Copy of Fuel-BFI Calcs 2022

FIRST AMENDMENT TO AGREEMENT FOR SOLID WASTE TRANSPORTATION AND DISPOSAL BETWEEN CITY OF MOSCOW, IDAHO AND FINLEY-BUTTES LIMITED PARTNERSHIP

THIS FIRST AMENDMENT TO AGREEMENT FOR SOLID WASTE TRANSPORTATION AND DISPOSAL BETWEEN CITY OF MOSCOW, IDAHO AND FINLEY-BUTTES LIMITED PARTNERSHIP (hereinafter "First Amendment"), is made and entered into this _____ day of _____ , 2022, by and between City of Moscow, Idaho, a municipal corporation of the State of Idaho, 206 East Third Street, Moscow, Idaho, 83843 (hereinafter "CITY"), and Finley-Buttes Limited Partnership, an Oregon limited partnership, (hereinafter "CONTRACTOR").

W I T N E S S E T H :

WHEREAS, CONTRACTOR was selected to own, otherwise provide, and operate Facilities to accept CITY Acceptable Waste in loaded Trailers at CITY's designated Solid Waste Processing Facility (hereinafter "SWPF") and to Transport to and Dispose of that Acceptable Waste at the Disposal Site for CITY through an executed Agreement approved by City Council on October 7, 2019, approved by CONTRACTOR's Board of Directors as evidenced by the Unanimous Written Consent of the General Partner of Finley-Buttes Limited Partnership dated October 16, 2019 and said Agreement was executed by the Parties on November 4, 2019, see Attachment "A" (hereinafter "Agreement"); and

WHEREAS, the Agreement provides for modification upon written agreement signed by the Parties (Article 2, Section 2.13); and

WHEREAS, the Agreement permits CITY, at CITY's sole discretion, to consider CONTRACTOR requests for reimbursements due to extraordinary fuel price increases (Article 8, Section 8.2 A.(4)); and

WHEREAS, the Agreement allows for adjustment of a Service Fee or any other payment or fee at any time by mutual consent of the Parties (Article 8, Section 8.4. E); and

WHEREAS, CONTRACTOR requested fuel relief due to the unanticipated significant increases in diesel fuel costs and the fact that a portion of CONTRACTOR's cost is predicated on fuel usage to transport CITY waste two hundred fourteen (214) miles one way; and

WHEREAS, CITY has determined that the requested fuel relief is reasonable and appropriate and has previously granted fuel relief to CONTRACTOR's predecessor when similar fuel cost volatility occurred; and

WHEREAS, the proposed fuel relief adjustment contained herein provides a fair and predictable method of accounting for fuel cost volatility and provides for both reimbursement of excessive fuel expenses to CONTRACTOR when fuel prices exceed 15% of the adjusted base fuel index, and credits to CITY when fuel prices drop 15% below the adjusted base fuel index as described herein; and

WHEREAS, the Parties intend to modify the Agreement through this First Amendment to accommodate CONTRACTOR'S requested fuel adjustment;

NOW, THEREFORE, it is agreed, for and in consideration of the mutual covenants and promises between the Parties hereto, as follows:

Section 1. All matters stated above are found to be true and correct and are incorporated herein by reference as if copied in their entirety and shall be adopted with the following sections of this First Amendment.

Section 2. It has been determined that a fair and predictable method of accounting for fuel cost volatility is warranted and is in the best interests of both Parties.

Section 3. CITY shall apply fuel cost adjustments as a payment to CONTRACTOR, or CONTRACTOR will apply the fuel cost adjustment as a credit to CITY, when the index changes as defined below.

1. The index to be used when considering fuel price adjustments pursuant to this First Amendment shall be the U.S. Energy Information Administration (EIA) https://www.eia.gov/dnav/pet/hist/LeafHandler.ashx?n=pet&s=emd_epd2d_pte_r5xca_dpg&f=m, Monthly West Coast (PADD 5) Except California No 2 Diesel Retail Prices (Dollars per Gallon).

2. The Current Fuel Index (CFI) shall be the current month's average price per gallon as reported by EIA as referenced herein. The monthly average CFI, shall be used to compute fuel adjustments for the same month that services are performed for CITY. (i.e. October CFI used to compute fuel adjustment for October services). Fuel adjustments will be calculated by the 15th of the month for the prior month's services, and any payments or credits will be applied to the subsequent month's bill (i.e. September's adjustment will be calculated on October 15th and any payments or credits will be applied to October's billing).

3. Fuel adjustments provided by this First Amendment shall be retroactively effective to January 1, 2022, and shall continue thereafter through the duration of the term of the Agreement.

4. Effective January 1, 2022, the initial base fuel index (BFI) shall be Three Dollars and Thirty-One Cents ($3.31) per gallon. The BFI shall thereafter be adjusted annually on October 1st of each year beginning October 1, 2022 to establish the Adjusted Base Fuel Index (ABFI) by an amount equal to forty percent (40%) of the annual Consumer Price Index (CPI) as published in January of each year by the United States, Bureau of Labor Statistics (Index I.D. CUUR0000SA0, All Urban Consumers, U.S. All items, 1982-84 = 100) as described herein.

   ABFI = BFI * (CPI annual adjustment * 40%)

   Where:
   BFI = Base Fuel Index

CPI Annual Adjustment = ((current year annual average CPI - prior year annual average CPI) / prior year annual average CPI)
ABFI = adjusted base fuel index

5. A fuel price adjustment will only be made when the CFI varies by more than fifteen percent (15%) from the ABFI. Payments and credits shall be computed as follows:

   Contractor payment if CFI is greater than 115% of ABFI:
   FPA = (CFI - (ABFI * 115%)) * Q * T

   City credit if CFI is less than 85% of ABFI:
   FPA = (CFI - (ABFI * 85%) * Q * T

   Where:
   FPA = fuel price adjustment
   Q = 92.44 gallons per trip
   T = monthly trips

Section 4. All other terms and conditions of the Agreement that are not amended by this First Amendment shall remain in full force and effect.

Section 5. This First Amendment was adopted by the City Council of the City of Moscow, Idaho and Approved by the Mayor of the City of Moscow on a regularly scheduled meeting dated _____ _____.

IN WITNESS WHEREOF, said CONTRACTOR and CITY have caused this First Amendment to be executed on the day and year first above written.

CONTRACTOR

By:_____
Brian Evola
Finley-Buttes Limited Partnership

CITY

City of Moscow, Idaho

By:_____
Arthur D. Bettge, Mayor

ATTEST

_____
Laurie M. Hopkins, City Clerk

Approved As To Form:

_____
Mia Bautista, City Attorney

DRAFT

ACKNOWLEDGMENT

STATE OF_____)
) ss:
County of _____)

On this _____ day of _____, 2022, before me, a Notary Public in and for said State, appeared Brian Evola, known to me to be the person named above and acknowledged that he executed the foregoing document as the duly authorized representative for Finley-Buttes Limited Partnership.

_____
Notary Public for _____
Residing at _____
My commission expires: _____

DRAFT

Attachment A

AGREEMENT FOR SOLID WASTE TRANSPORTATION AND DISPOSAL BETWEEN CITY OF MOSCOW, IDAHO AND FINLEY-BUTTES LIMITED PARTNERSHIP

THIS AGREEMENT FOR SOLID WASTE TRANSPORTATION AND DISPOSAL BETWEEN CITY OF MOSCOW, IDAHO AND FINLEY-BUTTES LIMITED PARTNERSHIP (hereinafter "Agreement") is made and entered into by and between the City of Moscow, Idaho, a municipal corporation of the State of Idaho, 206 East Third Street, Moscow, Idaho, 83843 (hereinafter "CITY"), and Finley-Buttes Limited Partnership, an Oregon limited partnership, (hereinafter "CONTRACTOR").

RECITALS

WHEREAS, CONTRACTOR has been selected to own, otherwise provide, and operate for the term of this Agreement, Facilities to accept Acceptable Waste in loaded Trailers at CITY's designated Solid Waste Processing Facility (hereinafter "SWPF") and to Transport to and Dispose of that Acceptable Waste at the Disposal Site for CITY; and

WHEREAS, CITY's authorization to enter into this Agreement is evidenced by the approval of the Moscow City Council at a regular meeting held on Oct 7, 2019 **; and**

WHEREAS, CONTRACTOR's authorization to enter into this Agreement is evidenced by resolution of CONTRACTOR duly adopted by the Board of Directors of CONTRACTOR, a copy of which is attached hereto as Exhibit "A" and by this reference incorporated herein.

ARTICLE 1

Definitions

1.1 **For the purposes of this Agreement, the following terms shall have the following meanings:**

"*Acceptable Waste*" includes:

Domestic Solid Waste as defined in OAR 340-093-0030(39), which states,

> "Domestic Solid Waste" includes, but is not limited to, residential (including single and multiple residences), commercial and institutional wastes, as defined in ORS 459A.100; but the term does not include:
> (a) Sewage sludge or septic tank and cesspool pumpings;
> (b) Building demolition or construction wastes and land clearing debris, if delivered to a disposal site that is limited to those purposes and does not receive other domestic solid wastes;
> (c) Source separated recyclable materials, or material recovered at a disposal site for recycling;
> (d) Industrial waste going to an industrial waste facility; or

(e) Waste received at an ash monofill from an energy recovery facility.

Construction and Demolition Waste as defined in OAR 340-093-0030(26), which states:

> "Construction and Demolition Waste" means solid waste resulting from the construction, repair, or demolition of buildings, roads and other structures, and debris from the clearing of land, but does not include clean fill when separated from other construction and demolition wastes and used as fill materials or otherwise land disposed. Such waste typically consists of materials including concrete, bricks, bituminous concrete, asphalt paving, untreated or chemically treated wood, glass, masonry, roofing, siding, plaster; and soils, rock, stumps, boulders, brush and other similar material. This term does not include industrial solid waste and municipal solid waste generated in residential or commercial activities associated with construction and demolition activities.

Agricultural Waste as defined in OAR 340-093-0030(3), which states:

> "Agricultural Waste" means waste on farms resulting from the raising or growing of plants and animals including but not limited to crop residue, manure, animal bedding, and carcasses of dead animals.

Industrial Solid Waste as defined in OAR 340-093-0030(53), which states:

> "Industrial Solid Waste" means solid waste generated by manufacturing or industrial processes that is not a hazardous waste regulated under ORS Chapters 465 and 466 or under Subtitle C of the federal Resource Conservation and Recovery Act. Such waste may include, but is not limited to, waste resulting from the following processes: Electric power generation; fertilizer/agricultural chemicals; food and related products/by-products; inorganic chemicals; iron and steel manufacturing; leather and leather products; nonferrous metals manufacturing/foundries; organic chemicals; plastics and resins manufacturing; pulp and paper industry; rubber and miscellaneous plastic products; stone, glass, clay and concrete products; textile manufacturing; transportation equipment; water treatment; and timber products manufacturing. This term does not include construction/demolition waste; municipal solid waste from manufacturing or industrial facilities such as office or "lunch room" waste; or packaging material for products delivered to the generator.

Acceptable "Special Waste" as defined by the CONTRACTOR's Solid Waste Disposal Permit, attached as Exhibit E.

"*Agreement*" means this Agreement Regarding Solid Waste Transportation and Disposal Services for CITY and all exhibits hereto, including, but not limited to, CONTRACTOR's authorization to enter into this Agreement, the Proposal for Solid Waste Transportation and

Disposal Service Documents, the performance guarantees required under Section 6.4 and all addenda to the Agreement or Proposal Documents, and any and all appendices, attachments, exhibits, amendments, change orders or modifications of the foregoing documents.

"*Alternate Disposal Site*" means the Disposal Site CONTRACTOR will use in the event the Primary Disposal Site becomes unavailable.

"*Alternate Disposal Site Agreement*" means a legally binding Agreement between CONTRACTOR and the owner or operator of a landfill or other site CONTRACTOR proposes to use in the event of unavailability of the Primary Disposal Site, which Agreement assures CONTRACTOR the right to use the landfill or other Disposal Site for the disposal of all Acceptable Waste CONTRACTOR is obligated to accept under this Agreement.

"*Applicable Law*" means all applicable Federal, State, County or City statutes, rules, codes, regulations, permits, ordinances and resolutions that apply to the Facilities or any of CONTRACTOR's operations or obligations under this Agreement.

"*Asbestos*" means asbestos or asbestos-containing waste materials as defined under, and that have been packaged in accordance with standards set forth in, regulations promulgated by the United States Environmental Protection Agency at 40 CFR Part 61.141, or any other Applicable Law.

"*Change in law*" means:

A. Any of the following that occurs after October 1, 2018:

(1) The enactment, adoption, promulgation, modification, repeal or change in interpretation of any Federal, State, City, County or other local law, ordinance, code, rule, requirement, regulation or similar legislation;

(2) The issuance of an order, decree or judgment of any Federal, State or Local court, administrative agency or governmental officer or body, to the extent that order, decree or judgment is not also the result of negligent or willful action or failure to act of the Party relying thereon, provided that contesting in good faith any other, decree or judgment shall not constitute or be construed as a willful or negligent action of that Party; or

(3) The imposition of any material conditions on the renewal of any official permit, license or approval which establishes requirements making the construction or operation costs of the Facilities financially more burdensome than the most stringent requirements in effect on October 1, 2018.

(4) Any imposition by a jurisdiction of, or increase in, taxes, fees or charges under applicable State or Federal law, specifically directed at the solid waste industry, including, but not limited to, the handling, Transportation, or Disposal of waste, which is uniformly imposed upon, or increased for, the handling, Transportation or Disposal of solid waste regardless of whether such waste originated in or outside of that jurisdiction and any imposition

of, or increase in, fees or charges for the importation into, or disposal of imported solid waste increased for, waste originating in that jurisdiction.

B. Notwithstanding the foregoing, the following shall not constitute a Change of Law for purposes of this Agreement:

(1) The adoption of, or change, amendment or modification to, any Federal, State, Local or any other law which imposes or increases a tax, fee or charge upon business activities generally, or certain classes of businesses' activities generally, and which is not specifically directed at solid waste Disposal and/or solid waste Transportation business activities, to the exclusion of other businesses activities not directly related to solid waste;

(2) The adoption of or change, amendment or modification to any law, ordinance, code, rule, regulation or similar requirement by a County, City or other local governmental body or agency relating to the handling, Transportation or Disposal of solid waste;

(3) Any imposition of, or increase in, fees or charges by a County, City or other local governmental body under Applicable County or other local Law, specifically directed at the solid waste industry, including, but not limited to, the handling, Transportation, or Disposal of waste, which is uniformly imposed upon, or increased for, the handling, Transportation, or Disposal of waste.

"*CITY*" means the City of Moscow, Idaho, and its successors as set forth in Article 19 hereof, and its assigns.

"*CONTRACTOR*" means Finley Buttes Limited Partnership, selected to provide solid waste Transportation and Disposal services in accordance with this Agreement, its successors or assigns and, as applicable, the CONTRACTOR's officers, employees, agents and subcontractors.

"*County*" means Latah County, a governmental subdivision of the State of Idaho.

"*Consumer Price Index*" or "CPI" means the Consumer Price Index Series ID: CUUR0000SA0 All Urban Consumers. All items in U.S. city average, all urban consumers, not seasonally adjusted, All Items, 1982-84=100, as prepared by the United States Department of Labor, Bureau of Labor Statistics ("BLS"), or its successor. If BLS designates an index with a new title or code number or table number as being the continuation of the index cited above, the new index will be used.

"*Cost of Service Form*" means the form provided by CONTRACTOR in the Response to RFP to submit its price proposal response, Appendix "B", to CITY's RFP.

"*Delay of Operations*" means failure to provide sufficient amount of empty Trailers to allow daily quantities of waste accepted at the SWPF to be loaded and removed; failure to at all times have at least one (1) empty Trailer available at the SWPF; or failure to remove loaded Trailers from the SWPF as specified in the Technical Specifications attached as Exhibit "C".

"*Disposal Site*" means a landfill or other site or Facility, which is duly licensed and approved by all governmental bodies and agencies with jurisdiction, and which is to be used by CONTRACTOR for the final disposal, treatment, utilization, processing and/or deposit of any Acceptable Waste received under this Agreement, including all personal property used at that site for purposes of this Agreement.

"*Dispose*" or "*Disposal*" means all work, services or operations performed by CONTRACTOR pursuant to this Agreement after Acceptable Waste enters the boundaries of a Disposal Site pursuant to this Agreement.

"*Facility*" or "*Facilities*" means any real or personal property provided in accordance with the requirements of the Specifications, and owned, leased, furnished, operated or used by CONTRACTOR to carry out the provisions of this Agreement, including, but not limited to, any such property used for or in connection with the Primary and/or Alternate Transportation and/or Disposal sites.

"*I.C.*" means the Idaho Code.

"*Medical Waste*" means noninfectious and/or non-injurious waste or treated and properly packaged infectious and/or injurious waste originating in a medical, veterinary or intermediate care facility which is generated in the diagnosis, treatment, or immunization of human beings or animals, in research pertaining thereto, or in the production or testing of biologicals and that may be deposited in the general solid waste stream under applicable Federal, State, County and City laws and regulations including, but not limited to, the regulations of CITY, County and Idaho Health District or Department; the term does not include infectious waste originating in a medical, veterinary or intermediate care facility that has not been treated and may not be deposited in the general solid waste stream under applicable Federal, State, County or CITY laws or regulations, including but not limited to, the Health District or Department regulations. As used above, the term "biologicals" means preparations made from living organisms, and their products, such as vaccines and cultures, treating or immunizing humans or animals or in research pertaining thereto.

"*OAR*" means Oregon Administrative Rule.

"*ORS*" means Oregon Revised Statutes.

"*Person*" or "*Persons*" means, without limitation, any individual, firm, corporation, association, partnership, consortium, joint venture, entity, government agency, or unit of government.

"*Primary Disposal Site*" means the Disposal Site CONTRACTOR uses for the Acceptable Waste, starting upon the date of commencement of service under this Agreement. The Second Disposal Site shall become the Primary Disposal Site on the Second Disposal Site Date or upon such other date as may be agreed to in writing by CITY and CONTRACTOR.

"*Project*" means any and all services, matters and things that the Agreement requires to be done, kept, performed and furnished by CONTRACTOR and by CITY, respectively.

"*Representative*" means, depending on the context, the authorized representative of CITY or CONTRACTOR designated in accordance with Article 5.

"*Response to RFP*" means CONTRACTOR's response to CITY's Request for Proposals for Solid Waste Transportation and Disposal Services.

"*RFP*" means the Request for Proposals for Solid Waste Transportation and Disposal Services provided by CITY which constitutes the invitation to respond, including the information and instructions to responders, the technical specifications and the response submitted by CONTRACTOR, copies of which are attached hereto as Exhibit "B" and by this reference incorporated herein.

"*Secondary Disposal Site*" means the backup Disposal Site specified in the Proposal for Solid Waste Transportation and Disposal attached hereto as Exhibit "B".

"*Secondary Disposal Site Agreement*" means a legally binding agreement between CONTRACTOR and the owner or operator of a landfill or other Disposal Site CONTRACTOR proposes to use in the event that the Primary Disposal Site cannot be used, if CONTRACTOR is not the owner of such landfill or other Disposal Site, which agreement assures CONTRACTOR the right to use the landfill or other Disposal Site for the disposal of all Acceptable Waste CONTRACTOR is obligated to accept under this Agreement.

"*Service Fee*" means the amount paid by CITY to CONTRACTOR for performance of its obligations under this Agreement and adjusted, as set forth in Article 8.

"*Solid Waste Processing Facility*" or "*SWPF*" means the site designated pursuant to Section 7.7 at which waste is received and loaded into Trailers.

"*Special Waste*" means the following material if it is managed and disposed of as specified in the Oregon Department of Environmental Quality-approved Special Waste Management Plan: petroleum contaminated soil, sewage sludge and septage, polychlorinated biphenyls (PCBs) in concentrations less than 50 parts per million, bovine spongiform encephalopathy (BSE) waste, free liquid containing solid waste if managed and solidified prior to acceptance.

"*Specifications*" means the technical specifications for services under this Agreement, which are attached to this Agreement as Exhibit "C".

"*Surety*" means the Person providing a performance guarantee required under Sec 6.4 guaranteeing or providing the funds to guarantee performance of CONTRACTOR's obligations under this Agreement. The qualifications required of a Surety are set forth in Section 6.4.

"*Term*" or "*Term of Agreement*" means the term of this Agreement set forth in Article 20, including any extensions thereof.

"*Trailer*" means a transfer Trailer or intermodal shipping container on a chassis.

"*Transport*" or "*Transportation*" means the hauling of empty or loaded Trailers to and from the SWPF and the Disposal Site and includes, but is not limited to, the storage and handling of Trailers at any transfer Facility or other Facilities used by CONTRACTOR to deliver waste to the Disposal Site.

"*Transport Facilities*" means tractors, Trailers and all other property owned, leased, used or furnished by CONTRACTOR in providing Transport of waste under this Agreement.

"*Unacceptable Waste*" means

(1) Hazardous Waste;

(2) Radioactive, volatile, corrosive, highly flammable, explosive, biomedical, infectious, biohazardous, toxic or Hazardous Waste;

(3) Sewage sludge, human waste, cesspool pumpings, infections waste, liquid waste, vehicles, used oil, batteries, whole waste tires, recyclable material, unless approved in writing by the Oregon Department of Environmental Quality, large appliances, explosives and electronic waste; and

(4) Any material, the Transportation, handling or Disposal of which would constitute a violation of any applicable State or Federal law pertaining to health, safety, or the environment, whether enacted prior to or subsequent to execution of this Agreement.

"*Uncontrollable Circumstance*" means:

(1) Any act or event that has had or may reasonably be expected to have a material adverse effect on the rights or obligations of a Party to this Agreement, or a material adverse effect on any one or more of the Facilities or the acquisition, construction, start-up, testing, operation, ownership or possession of the Facilities, if that act or event is beyond the reasonable control of the Party relying thereon as justification for not performing an obligation or complying with any condition required of that Party under this Agreement. Subject to Subsection (2) below, those acts or events shall include, but are not limited to the following:

(a) an act of God (except normal weather conditions for the geographic area of the Facilities), hurricanes, tornadoes, epidemic, landslide, lightning, earthquake, volcano eruption, nuclear radiation, fire or explosion, flood or similar occurrence, an act of public enemy, war, blockade, insurrection, riot, general arrest, or restraint of government and people, civil disturbance or similar occurrence, that directly affects the operation of a Facility;

(b) the failure of any appropriate Federal, State or Local agency or public or private utility having operation jurisdiction over, or responsibility to serve any of the Facilities, to provide, maintain and assure the maintenance of any necessary utility which failure is not caused by CONTRACTOR's failure to pay for those utilities or CONTRACTOR's failure to comply with Applicable Law;

(c) for CONTRACTOR, a non-contractor strike;

(d) for CITY, any strike or labor dispute; or

(e) a Change in Law as defined herein.

(2) It is expressly understood and agreed that, notwithstanding any other provision of this definition, the following events or conditions, in and of themselves, shall not constitute an Uncontrollable Circumstance:

(a) adverse changes in the financial ability of any Party to this Agreement to perform its obligations under this Agreement;

(b) the consequences of errors of design, construction, start-up, operation or maintenance on the part of CONTRACTOR or any of its employees, agents or subcontractors;

(c) the failure of CONTRACTOR to secure patents or licenses in connection with the technology necessary to design, construct, operate or maintain the Facilities;

(d) the lack of fitness for use, or the failure to comply with the Specifications or the design of any materials, equipment or parts constituting any part of the facilities;

(e) the failure of any technology to perform;

(f) as to CONTRACTOR, any act or event, the occurrence against which CONTRACTOR is obligated to carry insurance under this Agreement, to the extent CONTRACTOR is so obligated;

(g) any subsurface condition encountered during the construction or expansion of any of the Facilities;

(h) periodic flooding, freezing or snow accumulation which causes restrictions upon the use of or seasonal or other temporary closure of roads, bridges or other transportation facilities thereby making such roads, bridges or transportation facilities unavailable for use by CONTRACTOR, and which is within the range of unavailability experienced in the case of such transportation facilities during one (1) or more of the ten (10) years preceding the year in which this Agreement is executed.

"*USC*" means United States Code.

1.2 Construction of Terms. Unless otherwise specified in this Agreement, words describing material or work that have a well-known technical or trade meaning shall be construed in accordance with the well-known meaning generally recognized by solid waste professionals, engineers and trades.

ARTICLE 2

General Provisions

2.1 Law Applicable. This Agreement is made in, and shall be construed under the laws of the State of Idaho.

2.2 Entire and Complete Agreement. This Agreement constitutes the entire and complete agreement, and the final expression of the Parties with respect to the subject matter it contains, and supersedes all prior or contemporaneous agreements, understandings, arrangements, commitments and representations, whether oral or written. The body of this Agreement and the exhibits and attachments hereto shall be read as a whole and construed to be consistent, whenever possible, in order to carry out the intent of these documents. In the event of an irreconcilable conflict between the language set forth in the body of this Agreement and any of the exhibits or attachments hereto, the most specific language shall prevail, and if one (1) provision is not more specific than the other, the language in the body of this Agreement shall prevail and this Agreement shall be interpreted as if that conflicting language was not a part of the agreement between the Parties. CONTRACTOR immediately shall bring to CITY's attention for decision and mutual revision, any observed conflicts between or duplications of any Agreement provisions, including exhibits and attachments hereto, or any material omissions from this Agreement. CONTRACTOR shall obtain written instructions from CITY's Representative before proceeding with services affected by omissions or discrepancies in this Agreement.

2.3 Severability. If any provision is for any reason determined to be invalid, illegal or unenforceable under any Applicable Law, the remaining provisions of this Agreement shall remain in effect and bind the Parties; however, the Parties shall negotiate in good faith to amend the Agreement to effectuate the intent of any invalid, illegal or unenforceable provision, if permissible under Applicable Law.

2.4 Time of the Essence. Time is of the essence of this Agreement.

2.5 Waiver of Provisions. CITY's or CONTRACTOR's failure to object to a breach of any Agreement provision is not and shall not be construed as a waiver of that provision. The payment or acceptance of compensation subsequent to any breach is not and shall not be deemed an acceptance of that breach. Any waiver must be in writing and supported by consideration.

2.6 Access. CITY shall have the right and unlimited access to inspect any or all of CONTRACTOR's and subcontractor's operations, Facilities or records related to this Agreement; however, CITY's access to records under this Section shall be subject to the confidentiality provisions of Section 6.9 B. CITY shall have access to operations and Facilities

under this Section at any and all times during normal business hours of or when there is activity of any kind at those operations or Facilities.

2.7 No Third-Party Beneficiaries. This Agreement is entered into by CITY in its governmental capacity and is not intended to, nor does it create any third-party beneficiary or rights in any public or private Person.

2.8 Personal Liability. This Agreement is not intended to create or result in any personal liability for any public official or CITY employee or agent, nor shall the Agreement be construed to create that liability.

2.9 Comprehensive Agreement. All services that are necessary to complete and carry out the Project as described in this Agreement shall be considered part of the Project and CONTRACTOR shall perform or provide for the services without extra compensation, unless otherwise expressly stated in this Agreement.

2.10 Subsidiary Agreements. No agreement between CONTRACTOR and its subcontractors, officers, employees or agents including all agreements relating to the use, lease, operation or ownership of the Disposal Site and other Facilities shall prevent, expressly or in effect, CONTRACTOR from performing its obligations under this Agreement.

2.11 Notices.

A. Except as may otherwise be expressly provided, all approvals, requests, reports, notices, communications or other materials or information required or permitted to be made or given by a Party to the other Party hereunder, shall be deemed to have been given or made only if the same is reduced to writing and delivered, either personally or by means of the United States Postal Service (certified mail), to CITY's Representative or CONTRACTOR's Representative, as the case may be, at their respective addresses as set forth below.

B. For all purposes of this Agreement, any such approval, request, report, notice, communication or other material or information which is delivered by means of the United States Postal Service as aforesaid shall be deemed to have been delivered as of the fifth business day next following the date of the postmark thereof.

C. All notices, requests and other communications to either Party hereunder shall be in writing and shall be given to such Party at the following address, or such other address as such Party may hereafter specify for the purpose by notice to the other Party:

If to CITY:

City of Moscow
Sanitation Manager
206 East Third Street
P O Box 9203
Moscow, Idaho 83843

Telephone: (208) 883-7131
tdavis@ci.moscow.id.us
Attention: Tim Davis, Sanitation Manager

If to CONTRACTOR:

Kevin Green
Finley Buttes Limited Partnership
P O Box 350
Boardman, Oregon 97818
KevinG@wasteconnections.com

Telephone: (541) 965-1339
Attention: Kevin Green

2.12 Article, Section and References. Any Articles, Sections or Subsections mentioned in this Agreement by number only, without reference to another document, refer to those Articles, Sections or Subsections contained in this Agreement.

2.13 Amendment or Waiver. Neither this Agreement, nor any provision hereof, may be changed, modified, amended, or waived except by written instrument signed by the Parties.

2.14 Agreement Execution. For purposes of this Agreement, Agreement execution shall be the date CITY executes the Agreement.

ARTICLE 3

Independent CONTRACTOR

3.1 CONTRACTOR as Independent CONTRACTOR. CONTRACTOR shall perform all work under this Agreement as an independent contractor. CONTRACTOR is not, and shall not be considered an employee, agent, sub-agents or servant of CITY for this Agreement or otherwise; CONTRACTOR's subcontractors, employees or agents are not and shall not be considered employees, agents, sub-agent or servants of CITY for this Agreement or otherwise.

3.2 CONTRACTOR's Control of Project. CONTRACTOR shall have the exclusive right to control the services and work performed under this Agreement, and the Persons performing those services and work. CONTRACTOR shall be solely responsible for the acts and omissions of its officers, agents, employees, contractors and subcontractors. Nothing in the Agreement shall be construed as creating a partnership or joint venture between CITY and CONTRACTOR or giving CITY a duty to supervise or control the acts or omissions of any Person performing services or work under this Agreement.

ARTICLE 4

Subcontractors

4.1 Rejection of Subcontractors.

A. During the Term of this Agreement CITY shall have the right to reject any or all subcontracts of all or part of CONTRACTOR's obligations to perform the Project or provide any of the Facilities if CITY reasonably believes that the subcontractors concerned either have not or will not adequately perform the tasks assigned to them. Criteria include, but are not limited to, conflicting rights or obligations with respect to any portion of the work under this Agreement and/or any related franchise or contract awarded by CITY, including, but not limited to, any franchise or contract for SWPF operation. CITY shall be the sole judge of whether such conflict exists. CONTRACTOR shall inform CITY in writing of all proposed subcontracts not listed in the Bid Documents and any changes of subcontractors from those listed in the Bid Documents and shall not use such subcontractor(s) to perform any part of the Project or provide any of the Facilities under this Agreement without obtaining the written approval of CITY.

B. In no event shall CONTRACTOR's subcontracting or CITY's failure to reject CONTRACTOR's subcontracting of its obligations to operate the Facilities, in any way relieve CONTRACTOR of its responsibilities under this Agreement. CONTRACTOR shall have the exclusive right to control the services and work performed under this Agreement and the Persons performing such services and work. CONTRACTOR shall be solely responsible for the acts and omissions of its officers, agents, employees' suppliers, subcontractors and those subcontractors' suppliers, employees, agents and officers. Nothing in this Agreement shall be construed as creating a partnership or joint venture between CITY and CONTRACTOR or giving CITY a duty to supervise or control the acts or omissions of any Person performing services or work under this Agreement. CONTRACTOR's subcontracting or CITY's approval of that subcontracting of CONTRACTOR's obligation to perform under this Agreement shall not relieve CONTRACTOR of its obligations under this Agreement.

4.2 Assignment of Subcontracts. All contracts between CONTRACTOR and its subcontractors for services and work under this Agreement executed after October 1, 2018 shall contain a clause that if CONTRACTOR defaults in performance of this Agreement and CITY accepts assignment of the subcontract under Article 18, the subcontractor shall recognize CITY or its assignee as CONTRACTOR and CITY or its assignee shall have all the rights, remedies and responsibilities of CONTRACTOR under that subcontract.

ARTICLE 5

CONTRACTOR and CITY Representatives

5.1 Representatives. CONTRACTOR and CITY shall each designate an agent to serve as a competent Representative for the Term of this Agreement. CITY and CONTRACTOR, respectively, shall keep each other informed of the identity of their respective Representative and shall provide each other with a telephone number and other means by which that Representative may be reached twenty-four (24) hours every day.

5.2 CONTRACTOR Representative. CONTRACTOR Representative shall be CONTRACTOR's agent and shall represent CONTRACTOR for all purposes of this Agreement. All written or verbal directions, instructions or notices given by CITY to that Representative and

related to the subject matter of the Agreement shall bind CONTRACTOR as if delivered to CONTRACTOR personally. CONTRACTOR's Representative shall be in charge of the Project at all times and shall have authority to act on behalf of CONTRACTOR; CONTRACTOR's Representative's statements, representations, actions and commitments, shall fully bind CONTRACTOR, subject to the requirements of Section 2.13. CONTRACTOR's Representative shall be accessible at all times during the Term of this Agreement.

5.3 CITY Representative. Unless CITY notifies CONTRACTOR otherwise in writing, CITY's Representative shall be CITY's Representative for all purposes of this Agreement.

ARTICLE 6

CONTRACTOR Responsibilities, Representations and Warranties

6.1 General. CONTRACTOR's responsibilities under this Agreement include, but are not limited to:

A. Acceptance, storage, handling, unloading, Transportation and Disposal of Acceptable Waste, delivered to CONTRACTOR at the SWPF in Trailers that conform to the requirements of the Specifications;

B. Ownership, operation and/or leasing of Facilities necessary to perform its obligations under this Agreement;

C. Procurement and maintenance, as applicable, of the performance guarantees required under Section 6.4;

D. Compliance with all Applicable Laws in accordance with Section 6.9; obtaining any permit, license, certificate or governmental approval required for the Project in accordance with Section 6.6; and the payment of all applicable taxes and fees in accordance with Section 6.7;

E. Procurement and maintenance of insurance in accordance with Article 12;

F. Maintenance of a closure and post-closure trust fund in accordance with Section 6.8;

G. Maintenance of an alternate operations plan and an emergency operations plan in accordance with Sections 6.17 and 6.18 of the Agreement and alternate Facilities in accordance with Section 6.5 of this Agreement;

H. Acceptance and Disposal of Asbestos upon delivery by any CITY employee, subcontractor, or CITY resident to CONTRACTOR's Disposal Site during normal hours of operation, provided that Asbestos may legally be accepted and Disposed of at said site, and provided further that CITY shall pay CONTRACTOR's normal and customary charge for the Disposal of the Asbestos.

I. Performance of all other obligations required under this Agreement.

6.2 Commencement of Service.

A. Commencement of Service to CITY. CONTRACTOR shall commence service to CITY on October 1, 2018. On the date service is to commence, CONTRACTOR shall accept Transport and Dispose of all Acceptable Waste loaded into Trailers at the SWPF by or on behalf of CITY in accordance with this Agreement.

B. Transport and Disposal of All Acceptable Waste from the SWPF. CONTRACTOR shall Transport and Dispose of all Acceptable Waste loaded into Trailers at the SWPF. Such Acceptable Waste may include waste from the County, other cities within the County, and other counties and cities.

6.3 Facilities; Replacement or Repair.

A. Facilities. CONTRACTOR shall construct, own, lease or otherwise provide, maintain and operate in a quantity sufficient to perform the services under this Agreement in a timely manner throughout the Term of the Agreement in accordance with the Specifications, Transport Facilities, Disposal Facilities and alternate facilities. Subject to Section 6.5, CONTRACTOR may add to, delete, improve or replace Facilities during the Term of the Agreement so long as such additions, deletions, improvements or replacements are carried out and operated in accordance with Applicable Law. All Facilities provided by CONTRACTOR shall meet or exceed the requirements in the Specifications and any and all requirements of any Applicable Law.

B. Replacement or Repair. CONTRACTOR at its sole expense shall keep all Facilities in good working order and repair. CONTRACTOR shall be liable for all costs reasonably incurred by CITY to repair or replace the Facilities owned, operated and/ or used by CONTRACTOR or provided to CITY for its use under this Agreement, including, but not limited to, the Trailers, tractors, Transport Facilities and Disposal Facilities. In the event a Trailer is damaged due to failure of CITY or its agents to use reasonable care in loading or moving of the Trailer, CONTRACTOR shall repair or replace the Trailer if not economically feasible to repair. CITY shall reimburse CONTRACTOR for the cost of repair and replacement if and only if:

(1) the repair or replacement is necessary to remedy damage caused by the negligence of CITY or its agent, including a third party SWPF operator, and

(2) CONTRACTOR assigns to CITY any and all subrogation rights it has against such operator or any other Person who may be liable for the damage; and

(3) the costs incurred to repair or replace the Trailer are the least costly means available under the circumstances to repair or replace the Trailer; and

(4) CONTRACTOR fully documents the costs it incurred to CITY's reasonable satisfaction.

CITY shall reimburse CONTRACTOR only for property damage to Trailers; nothing in this Section shall require or be construed to require CITY to reimburse

CONTRACTOR for any costs, damages or liabilities for personal injuries in any way related to the use or operation of the Trailers.

C. Rejection of Facilities. CITY may require CONTRACTOR at its sole expense to replace or repair any Facility including, but not limited to, tractors or Trailers used to provide services under this Agreement, when CITY reasonably believes they are not road-worthy or otherwise do not conform to the Specifications.

6.4 Financial Guarantee of Agreement Performance.

A. Performance Bond. CONTRACTOR shall provide and maintain in force for the Term of the Agreement a performance bond or bonds in substantially the form attached hereto as Exhibit C.

B. Alternate Agreement Performance Guarantee. In its sole discretion, CITY may accept such other form of bond or letter of credit that is approved by CITY. For purposes of this Subsection, the term "performance guarantee" shall mean any bond, letter of credit or other financial guarantee referred to in this Article and provided to guarantee or provide the funds to guarantee the performance of CONTRACTOR's obligations under this Agreement.

C. Qualifications of Surety. The Surety must be licensed to conduct business in the State of Idaho and all other states where the Project is located. A Surety which provides a bond or other alternate form of performance guarantee in lieu of an irrevocable standby letter of credit must:

(1) conform with all applicable Idaho State statutory and regulatory requirements for sureties, and

(2) be included on the current list of Companies Holding Certificates of Authority as Acceptable Sureties on Federal Bonds and as Acceptable Reinsuring Companies, as published in circular 570, as amended, by the Audit Staff Bureau of Accounts, United States Treasury Department.

A Surety providing a letter of credit must be a financial institution whose long-term debt is rated in one (1) of the three (3) highest categories by a nationally recognized rating agency (e.g. Standard & Poor's rating of AAA, AA or A).

D. Amount of Performance Guarantee. The amount of the performance guarantee for the first year of operations under the Agreement shall be six hundred thousand dollars ($600,000). For the second and all subsequent years of operations under the Agreement, the amount of the performance guarantee shall be not less than sixty percent (60%) of the revenue CITY projects CONTRACTOR will earn under the Agreement for the period of the performance guarantee. The projection shall be reasonably based upon services provided and revenues earned previously under the Agreement and estimates of future changes in volumes of Acceptable Waste to be handled under the Agreement. Upon request by CONTRACTOR, CITY shall notify

CONTRACTOR of its determination of the required amount of the performance guarantee for the upcoming year of service.

E. Duration of Performance Guarantees. The initial and all successor performance guarantees shall be issued for a term of not less than one (1) year; CONTRACTOR shall provide a new performance guarantee or evidence satisfactory to CITY of the renewability of the current performance guarantee, at least one hundred eighty (180) days before the expiration date of the performance guarantee then in effect. Any performance guarantee provided under this Section shall provide that notwithstanding the termination or expiration of the Agreement, at any time within two (2) years of the end of the period covered by the performance guarantee, CITY may make a claim against the performance guarantee for CONTRACTOR's failure to perform its obligations under the Agreement during the period covered by the performance guarantee. However, CONTRACTOR shall be liable for its obligations under this Agreement notwithstanding the termination of the Surety's obligations under the performance guarantee.

F. Authority of Agent. All performance guarantees given under this Article that are signed by the Surety's agent must be accompanied by a certified copy of that agent's authority to act for the Surety at the time the bond is signed. CITY must approve in writing the Surety providing, and the form and substance of, all performance guarantees, such approval not to be unreasonably withheld, conditioned or delayed. CONTRACTOR may satisfy the obligations under this Article by providing performance guarantees from one or more sureties meeting the qualifications set forth in this Article.

G Guarantee of Post-Closure Fund. The performance guarantee shall guarantee performance of CONTRACTOR's obligations to contribute to a post-closure fund as set forth in Section 6.8, but may exclude guarantee of other closure and post-closure obligations.

6.5 Alternate Transportation and Disposal Facilities.

A. In the event the services required under this Agreement cannot for any reason be provided with the Primary Transportation and/or Disposal Site or other Facilities, or if CONTRACTOR's Transportation and/or Primary Disposal Site or other Facilities are inadequate or unavailable to provide service under this Agreement, CONTRACTOR shall provide, in accordance with the alternate operations plan required under Section 6.17 of the Agreement, an Alternate Disposal Site and other Facilities that operate in compliance with the requirements of this Agreement and meet or exceed the requirements of all Applicable Laws. The Alternate Disposal Site and other Facilities required under this Section shall be available for use on the day service is commenced under this Agreement. Except as otherwise expressly provided under this Agreement, CONTRACTOR shall provide the Alternate Disposal Site and Other Facilities at no additional cost to CITY.

B. CONTRACTOR may with prior written approval of CITY which shall not be unreasonably withheld, conditioned or delayed, use Facilities, Disposal Sites or processes different from the primary or alternate Disposal Site and other Facilities to carry out CONTRACTOR's obligations under this Agreement. Except as expressly provided otherwise in

the Agreement for the case of an Uncontrollable Circumstance, CONTRACTOR shall provide the alternate Disposal Site and other Facilities at no additional cost to CITY.

6.6 Permits, Licenses, Royalties.

A. CONTRACTOR shall obtain, maintain and pay for, at CONTRACTOR's sole expense, all permits required under any Applicable Law for its acquisition, construction, installation and operation of the Facilities and all other permits necessary to fulfill all its obligations under this Agreement. Without limiting the generality of the foregoing, CONTRACTOR shall, at its sole expense, prepare any environmental impact statement required under Applicable law. Within fifteen (15) days of receiving the notice of award of the Agreement from CITY, CONTRACTOR shall, with respect to the Facilities CONTRACTOR then expects to use to carry out its responsibilities under this Agreement, provide to CITY a list of all permits required for the performance of its obligations under this Agreement designating the issuing agency and the dates of issuance and expiration of those permits, a copy of all current permits and CONTRACTOR's schedule for obtaining or renewing all permits required during the Term of the Agreement. As Facilities are significantly changed, modified or replaced during the Term of this Agreement, CONTRACTOR shall provide copies of new permits relevant to the acquisition, construction, installation and operation of those facilities. To the extent, permitted by Applicable Law, CITY shall provide CONTRACTOR with any information or documents in its control that CONTRACTOR reasonably requests in order to obtain or maintain all required permits. For purposes of this section, the term "permits" means any temporary and/or permanent permits, approvals, licenses, certificates, inspection fees, surcharges and other approvals required for the performance of the Project.

B. CONTRACTOR shall be liable for all fines or civil penalties that may be imposed by any regulatory agency for CONTRACTOR-caused violations of permits, regulations or any other Applicable Laws; CITY shall not be liable for and shall not reimburse CONTRACTOR for payment of those fines or civil penalties. CONTRACTOR reserves the right to contest in good faith, any fine in an administrative proceeding or in court prior to its payment. Notwithstanding the foregoing, CITY shall reimburse CONTRACTOR for all fines and penalties imposed and paid as a result of the Transportation of Unacceptable Waste loaded into a Trailer except for fines and penalties (1) incurred due to the negligence of CONTRACTOR, or (2) related to any Unacceptable Waste discovered, transported and/or disposed of in accordance with Section 10.4, or (3) other Transportation of Unacceptable Waste by CONTRACTOR or CONTRACTOR's agent, employee, assignee or subcontractor, done with knowledge that Unacceptable Waste is being transported.

C. CONTRACTOR shall pay all royalties, fees and license payments, shall defend all lawsuits and hold CITY harmless from any loss resulting therefrom in accordance with Article 11.

6.7 Taxes and Fees. CONTRACTOR shall be responsible and liable for payment of all Federal, State and Local taxes and fees, and surcharges of every form, that apply to any and all Persons, property, income, equipment, materials, supplies, structures or activities that are involved in the performance of the Agreement, including, but not limited to, any income taxes,

real property, excise, sales and use taxes and fees that arise in connection with the Agreement; however, CONTRACTOR shall not be liable for payment of any tax or fee for which CITY is ordinarily responsible without regard to the services provided by CONTRACTOR under this Agreement.

6.8 Closure and Post-Closure Fund.

A. CONTRACTOR shall be responsible for all closure and post-closure costs relating to the Facilities. CONTRACTOR shall establish and maintain at its sole expense, or in the case of use by CONTRACTOR of a Disposal Facility not owned by CONTRACTOR, cause to be established and maintained, any closure and post-closure trust fund now or hereafter required under any Applicable Law.

B. CONTRACTOR shall use the money in the closure and post-closure trust fund, including interest earnings thereon, to guarantee proper closure of the Facilities used in connection with this Agreement and to provide for post-closure monitoring and the mitigation of adverse environmental effects of the Facilities. Money in the trust fund shall be spent in accordance with Applicable Law. Unless Applicable Law provides otherwise, CITY's proportional contribution to the trust fund after the Facilities have been closed and all adverse environmental effects of the Facilities mitigated, shall be paid to CITY. For purposes of this Section, "CITY's proportional contribution to the trust fund" shall mean the fractional portion of total remaining funds available for distribution which is equal to the fraction which results from dividing the amount of funds contributed due to Acceptable Waste and Asbestos delivered to the Facilities under this Agreement by the total amount of contributions to the fund due to delivery of all other waste to the Facilities, regardless of its source.

C. The requirements of this Section shall survive the termination of this Agreement.

6.9 Compliance with Law; Documentation; Confidential Business Records.

A. CONTRACTOR Compliance with Law; CITY Verification. CONTRACTOR , its officers, employees, agents and subcontractors shall comply with all Applicable Laws and the requirements of this Agreement in performing its obligations under this Agreement. CITY shall have the right and be given access to inspect copies of all correspondence or any other documents sent to or received from CONTRACTOR or its subcontractors related to CONTRACTOR's compliance with any Applicable Law or the requirements of this Agreement except for "confidential business records."

B. Confidential Business Records.

(1) CONTRACTOR, may designate documents that are only relevant to the terms of this Agreement as confidential business records; documents reasonably designated as such shall remain the exclusive property of CONTRACTOR. For purposes of this Section, "confidential business records" means all trade secrets, proprietary plans, financial data and the ideas and information contained therein, that CONTRACTOR makes available to CITY for purposes of this Agreement.

(2) If documents are designated as confidential business records, they shall be inspected by an independent accountant or other third party designated by CITY and approved

by CONTRACTOR (which approval shall not be unreasonably withheld); the third party selected shall determine whether documents are relevant to CONTRACTOR's compliance with Applicable Law. If the third party determines that the documents are relevant, then CITY may inspect the documents. For documents that contain both relevant and irrelevant information, the third party may delete any irrelevant information.

(3) CITY shall not disclose to others any information designated by CONTRACTOR as confidential business records, unless ordered by a court of competent jurisdiction that the information concerned or any portion thereof is subject to disclosure under the Idaho Public Records Act (I.C. §74-101 et seq.) or any other Applicable Law. CONTRACTOR recognizes and agrees that even if CITY determines that the information is properly withheld from public disclosure, a court may order the disclosure of that information. In such an event of disclosure, CITY shall have no liability to CONTRACTOR for any loss resulting therefrom. Notwithstanding the foregoing, CITY may disclose all information to employees, consultants, attorneys or other agents of CITY examining those documents for purposes of this Agreement. If required by law or a court order to disclose documents designated as confidential business records, CITY shall, to the extent possible, notify CONTRACTOR before that disclosure occurs.

C. All agreements between CONTRACTOR and Persons employed for this Agreement shall contain this Section's requirements. The requirements of this Section shall survive the termination or expiration of the Agreement. All unresolved disputes arising under this Section shall be resolved by arbitration under Article 17.

6.10 Records; Monthly Report. CONTRACTOR shall keep accurate records of all transactions connected with this Agreement including, but not limited to, all correspondence and invoices, weigh tickets or receipts issued at the SWPF or the Disposal Site. CONTRACTOR shall at all times maintain an accounting system that uses generally accepted accounting principles consistently applied for all services rendered and materials supplied, including additional and deleted work, in connection with this Agreement.

CONTRACTOR shall provide to City, by the fifteenth day of each month, a report for the preceding month summarizing routine and extraordinary activities during the prior month and plans and schedules for future activities. The report shall include, but not be limited to,

A. The tonnage accepted by CONTRACTOR from CITY at the SWPF;

B. The condition of the Facilities;

C. A report of all complaints submitted to the Agreement or as required by Section 6.11 and CONTRACTOR's response, if any;

D. A summary of any extraordinary occurrences affecting CONTRACTOR's performance including, but not limited to, occurrences affecting the Facilities;

E. Copies of the weigh tickets, invoices and/or receipts for the month;

F. Changes in the status and readiness of alternate Facilities and emergency Facilities and/ or associated plans;

G. Documentation regarding Unacceptable Waste, if any, gathered, produced and/or retained as required in Article 10;

H. Statements documenting the amount deposited in the closure and post-closure trust fund required under Section 6.8;

I. A summary of the tonnage of and identification by type of recyclable materials recovered, if any, from the Acceptable Waste delivered to CONTRACTOR and the amount of each material sold or marketed that month.

In addition to the monthly report required under this Section 6.10, CONTRACTOR shall provide to CITY within thirty (30) days of the end of any year of operations under the Agreement, an annual report summarizing and consolidating the information contained in the monthly reports provided for the preceding year.

All records required to be maintained by CONTRACTOR under this Section, shall be available for inspection by CITY and/or its auditor.

6.11 Accidents; Complaints.

A. Accidents; Reporting. CONTRACTOR shall be financially liable and otherwise responsible for all injuries, accidents and other mishaps associated with its operations, except to the extent caused by the negligence or intentional actions of CITY. CONTRACTOR shall report by telephone, messenger or electronic transmission, with verification of receipt, any accidents resulting from the performance of this Agreement to CITY as soon as practicable. For purposes of this Section, "accident" shall include the death of any person, any personal injury resulting in inpatient hospitalization or outpatient treatment by a physician, or damage to any real or personal property exceeding five thousand dollars ($5,000). CONTRACTOR shall report in writing to CITY within seven (7) days of that accident complete details of the accident including witness statements.

B. Response to Complaints; Report. CONTRACTOR shall respond in a reasonable and courteous manner to complaints, charges and allegations related to CONTRACTOR's performance under the Agreement within thirty (30) days of receipt of that complaint, charge or allegation, including but not limited to those complaints made or actions brought by citizens, citizen groups and public agencies. CONTRACTOR shall deliver to CITY as part of the monthly report required under Section 6.10 a report of all complaints submitted that shall include, but not be limited to, the name and address of the complainant, the substance of the complaint including the activity or service at issue, the action, if any, CONTRACTOR has taken to investigate or remedy the problem or an explanation of why no action has been taken.

6.12 Payment of Subcontractors and Laborers. Unless a reasonable dispute exists concerning payment, CONTRACTOR shall promptly pay all subcontractors, materialmen, suppliers or laborers engaged for purposes of this Agreement in accordance with the contract or agreement between that Person and CONTRACTOR.

6.13 Employment Discrimination: It is illegal under the U.S. Federal law to discriminate against an employee, either intentionally or through disparate impact, on account of race, color, gender, religion, sex (including pregnancy), national origin, physical or mental disability, age, sexual orientation, and gender identity. CONTRACTOR shall not discriminate against any employee or applicant for employment. CONTRACTOR's action under this Section shall include, but not be limited to, the following: employment, upgrading, demotion or transfer, recruitment or recruitment advertising, layoff or termination, rates of pay or other forms of compensation and selection for training, including apprenticeship. CONTRACTOR agrees to post in conspicuous places, available to employees and other applicants for employment, notices setting forth the provisions of this non-discrimination Section.

6.14 Scheduling; Management; Quality of Performance. CONTRACTOR shall coordinate, schedule in an orderly manner and manage all work done by CONTRACTOR's officers, employees, subcontractors and agents under this Agreement. CONTRACTOR and subcontractors shall perform every act or service under this Agreement in a skillful and competent manner in accordance with the highest standards of the solid waste transportation and disposal industries. Unless otherwise specified herein, CONTRACTOR shall be financially liable and otherwise responsible to CITY for any errors, deficiencies or failures to perform under this Agreement. All workers and subcontractors shall be skilled in their trades. All operators shall be licensed or otherwise qualified as required by law. CONTRACTOR shall furnish evidence of the skill and licenses of its officers, employees, subcontractors, agents and operators upon request of CITY. CONTRACTOR shall at all times enforce strict discipline and good order among its employees and all subcontractors.

6.15 Subsidiary Use of Facilities. CONTRACTOR may use the Transportation Facilities for its own purposes during the transportation of empty Trailers from the Disposal Site to the SWPF if used in accordance with all Applicable Laws. If the Facilities are so used, CONTRACTOR shall be solely responsible for all losses, damages, costs, charges, expenses, judgments or any liabilities whatsoever resulting from that use and shall hold harmless, indemnify and defend CITY from and against all claims, suits and liability that may arise as a result of that use. No CITY property shall in any way be used during CONTRACTOR's use of any Transportation Facility for CONTRACTOR's own purposes.

6.16 Representations and Warranties of CONTRACTOR. CONTRACTOR hereby makes the following representations and warranties to and for the benefit of CITY:

A. CONTRACTOR is duly organized and validly existing as an Oregon Limited Partnership, in good standing under the laws of the States of Idaho, Washington and Oregon, and it is duly qualified to do business in the States of Idaho, Washington and Oregon.

B. CONTRACTOR has full legal right, power and authority to execute and deliver, and perform its obligations under this Agreement, and has duly authorized the execution and delivery of this Agreement by proper action of its Managing Partners, Board of Directors, or other governing entity. This Agreement has been duly executed and delivered by CONTRACTOR and constitutes a legal, valid and binding obligation of CONTRACTOR enforceable against CONTRACTOR in accordance with its terms.

C. Neither the execution or delivery by CONTRACTOR of this Agreement, the performance by CONTRACTOR of its obligations hereunder, nor the fulfillment by CONTRACTOR of the terms and conditions hereof: (i) conflicts with, violates or results in a breach of Applicable Law; or (ii) conflicts with, violates or results in a breach of any term or condition of any judgment, order or decree of any court, administrative agency or other governmental authority, or to the best of CONTRACTOR's knowledge, any agreement or instrument, to which CONTRACTOR is a party or by which CONTRACTOR or any of its properties or assets are bound, or constitutes a default thereunder.

D. No approval, authorization, license, permit, order or consent of, or declaration, registration or filing, with any governmental or administrative authority, commission, board, agency or instrumentality, is required for the valid execution and delivery of this Agreement by CONTRACTOR, except such as has been duly obtained or made or such as CONTRACTOR has given CITY adequate assurance, in CITY's sole discretion, that it will be obtained or made before the commencement of services by CONTRACTOR under this Agreement.

E. Unless otherwise approved by CITY in writing, as of the date CONTRACTOR provides Waste Transportation and Disposal services under this Agreement, there shall not be any action, lawsuit, proceeding or, to the best of CONTRACTOR's knowledge, investigation, at law or inequity, before or by any court or governmental authority, commission, board, agency or instrumentality pending or, to the best of CONTRACTOR's knowledge, threatened, against CONTRACTOR, wherein an unfavorable decision, ruling or finding, in any single case or in the aggregate, would materially adversely affect the performance by CONTRACTOR of its obligations hereunder or in connection with the transactions contemplated hereby, or which, in any way, would adversely affect the validity or enforceability of this Agreement or any other agreement or instrument entered into by CONTRACTOR in connection with the transactions contemplated hereby.

F. CONTRACTOR holds, or is expressly licensed to use, all patent rights, licenses, and franchises necessary or appropriate to construct, operate and maintain the Facilities pursuant to and in accordance with the terms of the Agreement.

6.17 Alternate Operations Plan. Within sixty (60) days of execution of this Agreement, CONTRACTOR shall submit to CITY for review and approval a complete and detailed alternate operations plan for performing CONTRACTOR's obligations under this Agreement in the event any Primary Disposal Site and/or Transportation Facility for any reason becomes inadequate to satisfy the requirements of the Agreement and for operating the Alternate Disposal Site or other Facilities provided pursuant to the Agreement. The alternate operations plan shall be updated and submitted for CITY approval on an annual basis. This plan shall be of sufficient detail to satisfy CITY that CONTRACTOR is able to maintain operations in the event that Uncontrollable Circumstances prevent the use of the primary system or if for any other reason CONTRACTOR is unable to accept, Transport and Dispose of Acceptable Waste using the Primary Disposal Site or other Facilities pursuant to this Agreement. The plan shall include, but not be limited to:

A. An inventory of designated alternate Transportation Disposal Site and other Facilities;

B. A list of personnel and financial and technical resources to implement the plan;

C. A mobilization plan for each component of the alternate operations system;

D. Copies of any current operating Permits for an Alternate Disposal Site or other Facilities and a schedule for receiving pending Permits.

E. A copy of the Alternate Disposal Site Agreement for each Alternate Disposal Site designated in the plan.

If no changes have occurred since the last plan was submitted that affect any part of the alternate operations systems, a report stating that fact and signed by CONTRACTOR's Representative is sufficient to satisfy the annual alternate operations plan update required under this Section. CITY's failure to object to the plan is not and shall not be construed as a limitation on CONTRACTOR's obligation to accept, Transport and Dispose of Acceptable Waste in accordance with all Applicable Laws and the requirements of the Agreement.

6.18 Emergency Operations Plan. Within sixty (60) days of execution of this Agreement, CONTRACTOR shall submit to CITY, for its approval, a comprehensive emergency operations plan designed to mitigate and correct hazards that may arise due to accidents or disruption of the Transportation and Disposal of Acceptable Waste under this Agreement, including but not limited to, damage to property, the interruption of traffic along Transportation routes, release of hazardous or dangerous materials and the release of any Acceptable Waste. The emergency operations plan shall be updated and submitted for CITY approval on an annual basis.

The emergency plan shall include:

A. Procedures and a schedule for notifying CITY and the appropriate Federal, State or Local authorities of emergency conditions;

B. The identity of a Representative of CONTRACTOR, telephone number and other means by which that Representative may be reached twenty-four (24) hours of every day;

C. A description of the actions that CONTRACTOR's operating personnel shall take in response to the emergency conditions; and

D. Evidence acceptable to CITY of the existence of a plan setting forth the services that will be rendered by each local emergency response agency in the event of an emergency.

If no changes have occurred since the last plan was submitted that affect any part of the emergency plan, a report stating that fact and signed by CONTRACTOR's Representative is sufficient to satisfy the annual emergency plan update required under this Section. The emergency plan does not diminish CONTRACTOR's responsibility to comply with all

Applicable Laws for Transporting, Disposing and otherwise handling all waste in the event of an emergency. CITY's failure to object to the plan is not and shall not be construed as a limitation on CONTRACTOR's obligation to comply with all the requirements of this Agreement including, without limitation, the acceptance, Transportation and Disposal of Acceptable Waste.

6.19 Responsibility for Equipment. Any equipment furnished hereunder by CONTRACTOR shall remain the property of CONTRACTOR; however, CITY acknowledges that it has care, custody and control of the equipment while at CITY's location and accepts responsibility for all loss or damage to the equipment (except for normal wear and tear or for loss or damage resulting from CONTRACTOR's handling of the equipment) and for its contents. CITY agrees not to overload (by weight or volume), move or alter the equipment, and shall use the equipment only for its proper and intended purpose. CITY agrees to indemnify, defend and hold harmless CONTRACTOR, its employees and agents against claims, damages, suits, penalties, fines, liabilities and costs (including reasonable attorneys' fees) for injury or death to persons or loss or damage to property arising out of CITY's use, operation or possession of the equipment. This indemnification shall not apply if the equipment has any latent defects or defects or malfunctions due to CONTRACTOR'S failure to maintain the equipment to manufacture specifications. CITY agrees to provide unobstructed access to the equipment on the scheduled collection day. If the equipment is inaccessible so that the regularly scheduled pick-up cannot be made, CONTRACTOR will promptly notify CITY and afford CITY a reasonable opportunity to provide the required access; however, CONTRACTOR reserves the right to charge an additional fee for such inaccessibility and/or delay or any additional collection service required by CITY's failure to provide such access. The word "equipment" as used in this Agreement shall mean all containers used for the storage of waste materials, and such other on-site devices as may be specified herein or provided in relation hereto.

ARTICLE 7

CITY Responsibilities, Representations and Warranties

7.1 General. CITY's responsibilities under this Agreement include but are not limited to:

A. Payment of a Service Fee to CONTRACTOR in accordance with Article 8;

B. Ownership, operation or authority to utilize the SWPF;

C. Delivery of Acceptable Waste to CONTRACTOR, loaded in Trailers at the SWPF in accordance with the Specifications;

D. Provide, operate and maintain, directly or through an agent, contractor or franchisee, all Facilities necessary for operation of the SWPF including scales, compaction equipment and yard tractors.

7.2 Waste Flow; Flow Control. CITY shall enact and maintain in force and effect and use reasonable efforts to enforce applicable ordinances to require all Acceptable Waste (not including waste diverted by legal self-disposal, reuse, recycling or composting, construction and demolition waste, wood waste) to be delivered to the SWPF or other designated facilities.

7.3 Payment; Estimates. As long as CONTRACTOR's Facilities are operationally available to accept, Transport and Dispose of Acceptable waste in a quantity commensurate with the amount of Acceptable Waste delivered to CONTRACTOR pursuant to this Agreement during the Term of this Agreement, CONTRACTOR is providing the Transportation and Disposal Services in Accordance with the requirements of this Agreement and CONTRACTOR is otherwise materially in compliance with the terms of this Agreement, CITY shall pay CONTRACTOR a Service Fee in accordance with Article 8.

7.4 Cooperation with CONTRACTOR. CITY shall use reasonable efforts to cooperate with CONTRACTOR and to respond to CONTRACTOR's reasonable requests for information and assistance, consistent with the provisions of this Agreement. However, it is not CITY's responsibility to notify CONTRACTOR when to begin, cease or resume the Project except for notice of extension of the date of commencement of service as set out in paragraph 6.2 hereof, nor to give early notice of rejection of faulty work, nor in any way to supervise the Project so as to relieve CONTRACTOR of any liability, responsibility or consequence for neglect, negligence, carelessness, substandard or defective work, or for the use of substandard or defective materials or equipment, by CONTRACTOR, CONTRACTOR's officers, employees, subcontractors or agents. CITY does not assume any liability as a result of inspections conducted of the Project and instructions, directions or suggestions given by the inspector shall not relieve CONTRACTOR of any responsibility or liability associated with CONTRACTOR's operations.

7.5 Disputes. All disputes under this Article shall be resolved in accordance with Article 17.

7.6 Access to SWPF; Days and Hours of Operation. Except for the occurrence of an Uncontrollable Circumstance that requires the closure of the SWPF, CONTRACTOR shall, upon reasonable prior notice, have access to the SWPF twenty-four (24) hours per day, seven (7) days per week. However, during inclement weather conditions, access roads are maintained only during normal operating hours. Operating hours shall average eight (8) hours per day, six (6) days per week, excluding the following holidays; New Year's Day, Memorial Day, Independence Day, Labor Day, Thanksgiving Day and Christmas Day.

7.7 Location of Transfer Station. The SWPF shall be the Latah Sanitation SWPF located five (5) miles east of the City of Moscow, on Highway 8 East.

7.8 CITY warrants that CITY's pavement, curbing or other driving surface or any right of way reasonably necessary for CONTRACTOR to provide the services described herein are sufficient to bear the weight of all of CONTRACTOR's equipment and vehicles reasonably required to perform such services. CONTRACTOR will not be responsible for normal wear and tear of the roads, but shall liable and pay for damage to any such pavement, curbing, driving surface or right of way caused by CONTRACTOR's negligence.

ARTICLE 8

Service Fee and Contractor Compensation

8.1 Calculation of Service Fee.

A. Service Fee. Subject to Section 7.3 and any adjustments and offsets to which CITY is entitled under the Agreement, CITY shall pay to CONTRACTOR for CONTRACTOR's performance of its obligations under this Agreement, a service Fee calculated by:

(1) adjusting the base unit prices specified in Section 8.1 C. for changes in the CPI, as outlined in Sections 8.1 B. and D. to arrive at the per ton price for Transport and the per ton price for Disposal;

(2) multiplying the number of tons delivered to CONTRACTOR under this Agreement at the SWPF and Transported by CONTRACTOR during the billing period by the applicable per ton price for Transport and

(3) multiplying the tonnage of Acceptable Waste Disposed of by CONTRACTOR under this Agreement during the billing period by the applicable per ton Disposal price;

(4) adding the sums calculated under (2) and (3) above; and

(5) adding or subtracting any other increases or decreases in the Service Fee as provided in Sections 8.2, 8.3, and 8.4.

B. Applicable Unit Prices. For Transportation and Disposal Service provided prior to October 1, 2019, the base unit prices stated in Section 8.1 C. shall be used to calculate the Service Fee. For Transportation and Disposal Services provided on or after October 1, 2019, the base unit prices shall be adjusted for changes in the CPI as provided in Section 8.1 D. and the adjusted base unit prices shall be used in calculating the Service Fee.

C. Base Unit Prices. The base unit prices shall be the unit prices as set forth by CONTRACTOR in its Response to RFP for Solid Waste Transportation and Disposal Services which is attached hereto as part of Exhibit "B" subject to the following:

Adjustment to Base Unit Price for the second and subsequent years of the term hereof shall be adjusted upward or downward to reflect changes in the cost of operations, as reflected by fluctuations in the Consumer Price Index, as published by the United States, Bureau of Labor Statistics, Index Series I.D. CUUR0000SA0 All Urban Consumers, U.S. All items, 1982-84=100. The statistics utilized shall be for a one (1) year period and shall be the end adjusted figures for the Annual change for the calendar year, as published in January of each year.

D. CPI Adjustment to Base Unit Prices.

(1) Annual CPI Adjustment of Base Unit Prices. Base unit prices shall be adjusted annually on October 1 of each year commencing October 1, 2019, based on the prior calendar year annual percentage change in the Consumer Price Index, as reported in January, in accordance with the following formula:

AUP = BUP x (1 +(CPIy x Zx))

AUP = adjusted unit price
BUP = base unit price
CPIy = CPI for year y where y = the current year, e.g., y = 2018 for the first annual CPI adjustment to become effective October 1, 2019

Zx = price escalation adjustment for base unit price in percent which shall be as follows:

Transport	80%
Disposal	80%

(2) Change in CPI base Period. In the event the standard reference base period of the CPI is changed, the annual adjustment shall reflect the new base period in the first calendar year the new base period is available. Any unresolved dispute regarding any other change in the definition or calculation of the CPI that materially affects the service Fee under this Article shall be resolved by arbitration in accordance with Article 17 of the Agreement.

8.2 Service Fee Increases

A. Acceptable Increases. After receiving a request from CONTRACTOR to do so (which request shall be substantiated to CITY's reasonable satisfaction in accordance with this Section) the City shall increase the Service Fee by one hundred percent (100%) of CONTRACTOR's reasonable actual increased costs of performing the Project due to the events described below:

(1) Uncontrollable Circumstances. The Service Fee shall be increased to remedy Uncontrollable Circumstances only to the extent permitted under Article 9.

(2) Change in Certain Laws. The Service Fee shall be increased to reflect the reasonable actual cost of CONTRACTOR's compliance with a Change in Law, including, any increase of fees or taxes from the Oregon Department of Environmental Quality.

(3) Additional Work. The Service Fee may be increased for additional work performed in accordance with Article 15.

(4) Notwithstanding the foregoing, CITY, at its sole discretion, may also consider CONTRACTOR requests for reimbursements due to extraordinary fuel price increases. Any such CONTRACTOR request shall in no way obligate CITY to provide reimbursement.

B. General Conditions and Limitations on Service Fee Increases. CITY shall increase the Service Fee under Section 8.2 A. (l) and (2) only for costs incurred that are the least costly means of remedying the effects of an Uncontrollable Circumstance in accordance with Article 9, or for ensuring full compliance with a relevant Change in Law including changes in fees or surcharges and, in accordance with Article 15, for additional work. No Service Fee increase shall be allowed for any cost increases that are in any way attributable to conditions, structures, operations or activities at the Facilities caused by CONTRACTOR or its subcontractors, employees, agents, or servants or are otherwise within CONTRACTOR's control. CONTRACTOR must fully demonstrate, document and substantiate the need for the requested Service Fee increase to CITY's satisfaction and approval as a condition precedent to the CONTRACTOR's right to the Service Fee increase under this Section.

C. Cancellation of Service Fee Increases. On CITY's request, CONTRACTOR shall immediately provide CITY with all documents, information or other evidence in CONTRACTOR's possession or control that CITY requests to determine whether there is a continuing need for the Service Fee increase. In the event CITY determines that a Service Fee increase under this Section is no longer necessary, CITY may cancel that Service Fee increase upon thirty days' notice to CONTRACTOR. If CONTRACTOR objects to that cancellation within that thirty (30) day period, the matter shall be resolved by arbitration in accordance with Article 17. Until that resolution, the Service Fee shall not be reduced; however, CITY shall deposit the disputed portion of the Service Fee into an interest-bearing account acceptable to CONTRACTOR until the matter is resolved and the amount on deposit is awarded or allocated to the Parties. CONTRACTOR shall at all times keep CITY informed as to whether any Service Fee increase remains necessary.

8.3 Service Fee Decreases.

Acceptable Reductions; Notice. Subject to the provisions of this Article, CITY shall reduce the Service Fee one hundred percent (100%) of the reduced costs of CONTRACTOR's performance under the Agreement if the reduced costs are attributable to a condition or event for which CONTRACTOR is entitled to reimbursement of increased costs under this Article. CITY shall serve CONTRACTOR with notice and explanation of CITY's request that the Service Fee be reduced. Within thirty (30) days of service of that notice, CONTRACTOR shall respond in writing to CITY. The written response shall state whether or not CONTRACTOR believes that any reduction in the Service Fee is justified and shall itemize the reduction in cost of performing the Agreement. CONTRACTOR shall fully document and otherwise support its response to CITY's notice under this Section. In the event CITY and CONTRACTOR are unable to agree on whether a reduced Service Fee is appropriate, the matter shall be resolved by arbitration in accordance with Article 17. During that resolution, the Service Fee shall not be reduced; however, CITY shall deposit the disputed portion of the Service Fee into an interest-bearing account acceptable to CONTRACTOR until the matter is resolved and the amount on deposit is awarded to or allocated to the Parties.

Upon petition of CONTRACTOR, CITY may at any time cancel reductions made under this Section if CITY determines that the need for the reduction has expired or that a reduction

was made in error. CONTRACTOR shall at all times keep CITY informed as to when any reduction due to change in law is appropriate and when any reduction is no longer appropriate.

8.4 Other Service Fee Adjustments or Charges.

A. Alternate Facilities. CITY may adjust the applicable Service Fee to reflect the cost of handling waste at alternate Facilities due to the occurrence of an Uncontrollable Circumstance in accordance with Section 9.3 C. of the Agreement.

B. Liens. CITY may deduct from the Service Fee due CONTRACTOR under Article 8 of this Agreement, the amount necessary to pay any lien filed against any one (1) or more of the Facilities (including any real or personal property) required to fully perform the Agreement including, without limitation, any Federal or State tax lien, creditor's lien, mechanic's or materialmen's lien, and CITY may pay any such lien.

C. Waste. CITY shall reimburse CONTRACTOR in accordance with Section 10.4 for the cost of testing, inspecting, handling and/or disposing of Unacceptable Waste.

D. Asbestos Delivered to Disposal Site. CONTRACTOR shall be compensated for all Asbestos delivered to CONTRACTOR's Disposal Site by any CITY employee, subcontractor or resident during normal operation hours in accordance with Section 6.1 H. of this Agreement.

E. Mutually Agreed Adjustments. Nothing in this Section prohibits nor shall it be construed to prohibit the adjustment of the Service Fee or any other payment or fee at any time by mutual consent of the Parties, to reflect changes in load weights, equipment, routes or for any other reason mutually agreed upon.

F. Insurance. CONTRACTOR shall reduce the Service Fee by an amount sufficient to reimburse CITY for any insurance obtained by CITY in accordance with Section 12.2 of the Agreement.

G. Additional Work. The Service Fee may, subject to CITY's prior written approval, be increased for additional work or services performed in accordance with Article 15 of the Agreement by an amount equal to CONTRACTOR's actual reasonable cost of performing that work or services plus ten percent (10%) of those costs.

8.5 Payment

A. Invoice. CONTRACTOR shall provide to CITY by the fifteenth day of each month an invoice in a format acceptable to CITY and accompanied by supporting documentation as required by CITY for services performed by CONTRACTOR under this Agreement in the preceding month. CITY shall pay CONTRACTOR by check, draft or warrant for the previous month's service within thirty (30) days of receiving the invoice. If any amount is disputed, CITY may withhold payment of that disputed amount until the dispute is settled in accordance with Section 8.5 B. and Article 17.

B. All unresolved disputes concerning the calculation of or adjustment to payments based on Service Fees or Service Fee components shall be resolved by arbitration in accordance with Article 17. However, the undisputed portion of the adjustment shall be made effective promptly; further adjustment shall be made effective on the resolution of the dispute under Article 17. In addition to any portion of the disputed adjustment ultimately awarded, the arbitrator(s) may also award to CONTRACTOR interest on the disputed amount from the date the Service Fee component or payment adjustment was effective. The interest rate shall be determined by the arbitrator(s) and interest award paid within a period determined by the arbitrator(s), but, in no event later than twelve (12) months from the effective date of the Service Fee component or payment adjustment. The interest award may be made by means of a further increase or decrease in the payment made to CONTRACTOR.

8.6 This Agreement is contingent upon CITY receiving and appropriating the necessary funding to cover CITY's obligations. In the event that such funding is not received or appropriated, then, and in that event, CITY's obligations under this Agreement shall cease and each party shall be released from further performance under this Agreement without any liability to the other party. It is expressly agreed that CITY shall not activate this non-appropriation provision for its convenience or to circumvent the requirements of this Agreement, but only as an emergency fiscal measure during a substantial fiscal crisis, which affects generally its governmental operations.

ARTICLE 9

Allocation of Risk; Uncontrollable Circumstances

9.1 Contractor Reliance. CONTRACTOR warrants that prior to submitting its response to the RFP, it has examined carefully and acquainted itself with the Agreement, the Project, the Facilities, the difficulties that may be encountered in performing the Project, including without limitation, local periodic frost, flooding and other weather conditions, all Applicable Laws and any and all other matters necessary to the performance of this Agreement.

9.2 CITY Disclaimer. CITY does not warrant or admit the correctness of any investigation, interpretation, deduction or conclusion by CONTRACTOR relative to the RFP issued by CITY in connection with this Agreement, or to the condition or conditions of the SWPF or other Facilities. CONTRACTOR has made and shall make its own deductions and conclusions as to any and all problems that may arise from Facility site conditions and shall accept full legal responsibility and liability for those conditions.

9.3 Uncontrollable Circumstances.

A. Uncontrollable Circumstances Limited. CONTRACTOR's obligations to provide Transport and Disposal services under this Agreement and CITY's obligation to pay Service Fees under the Agreement are subject to Uncontrollable Circumstances that may necessarily and unavoidably prevent or substantially increase the cost of CONTRACTOR's performance of the Project or CITY's performance of its obligations hereunder. No other events shall excuse nonperformance of the obligations of the Parties.

B. Notification; Reconstruction; Service Fee Increases. As soon as possible after the occurrence of an Uncontrollable Circumstance, but in no event later than forty-eight (48) hours following the time the knowledgeable Party becomes aware of the Uncontrollable Circumstance, such Party shall notify the other of the event. If the occurrence of the Uncontrollable Circumstance damages, destroys or otherwise incapacitates any of the Facilities, CONTRACTOR shall, at the earliest practicable time, activate the alternate operation plan prepared in accordance with the Agreement for correcting, repairing or reconstructing the affected Facilities. If the Uncontrollable Circumstance or the damage to the Facilities is not provided for in that plan, CONTRACTOR shall submit to CITY, as soon as practicable, a plan for correcting, repairing replacing or reconstructing the affected Facilities.

C. Obligation to Provide Alternate Facilities. If CONTRACTOR, on the occurrence of an Uncontrollable Circumstance, cannot or fails to provide services under this Agreement with the primary Facilities, CONTRACTOR shall make available to CITY Alternate Transport and/or Disposal Facilities as applicable, and pursuant to the alternate operations plan identified in Section 6.17. CITY shall increase the Service Fee by one hundred percent (100%) of CONTRACTOR's reasonable actual increased costs of providing these Facilities (net of any insurance proceeds or other recoveries received by CONTRACTOR as a result of the Uncontrollable Circumstance), plus ten percent (10%) of those net increased costs. CONTRACTOR shall not receive a Service Fee increase or any other additional compensation for the use of alternative Facilities unless that use is necessitated by the occurrence of an Uncontrollable Circumstance.

D. Termination of Agreement Due to Uncontrollable Circumstances. Upon the occurrence of an Uncontrollable Circumstance after the date CONTRACTOR commences Transportation and Disposal services under this Agreement, CITY shall calculate any increase in the Service Fee as a result of that event. CITY shall compare the Service Fee as increased by a result of that event to the Service Fee which would have been in effect if that event had not occurred. The comparison shall be computed on a per month basis after adjustment for other increases provided for in Articles 7 and 8. For purposes of this Section, CITY shall take into account the aggregate of any increases in the Service Fee occurring after the date Transportation and Disposal services commence under this Agreement.

CITY may, at its option, terminate this Agreement effective ten (10) days after CITY gives CONTRACTOR written notice of termination upon the occurrence of any Uncontrollable Circumstance which:

(1) Prevents CONTRACTOR from Transporting and Disposing of Acceptable Waste for a period of ten (10) consecutive days; or

(2) If the cumulative increase in the Service Fee as a result of any and all Uncontrollable Circumstances is greater than fifteen percent (15%), excluding all adjustments to the Service Fee otherwise authorized by this Agreement (including without limitation CPI adjustments) provided if CITY provides CONTRACTOR with written notice of its intention to terminate this Agreement pursuant to this Subsection D. (2), then, if CONTRACTOR elects to

forego that portion of the increase that causes the Service Fee to increase more than fifteen percent (15%), CITY's right of termination may not be exercised; or

(3) If the Uncontrollable Circumstance and its expected effect on any one (1) or more of the Facilities would prevent operation of the Facilities at least at seventy-five percent (75%) of the normal operational standard for twelve (12) months or more, or result in performance of CONTRACTOR's obligations under the Agreement for twelve (12) months or more through subcontractors or other parties to such an extent that for such period CONTRACTOR will no longer directly perform any substantial and material portion of CONTRACTOR's obligations under the Agreement.

E. Disputes. Unresolved disputes concerning the calculation of remedying the effects of an Uncontrollable Circumstance shall be resolved by arbitration in accordance with Article 17.

9.4 Insurable Uncontrollable Circumstances. If any of the Facilities are damaged or destroyed due to explosion, floods, fire, or other events for which CONTRACTOR is obligated to carry insurance, CONTRACTOR shall act diligently to promptly collect and apply insurance proceeds to the correction or reconstruction of those Facilities.

ARTICLE 10

Ownership; Inspection of Waste; Unacceptable Waste

10.1 Ownership. Subject to the limitations and conditions of this Article, title to Acceptable Waste that is loaded into a Trailer shall pass to CONTRACTOR in accordance with the Specifications at the SWPF as soon as CONTRACTOR accepts that waste, but in no event later than the moment the Trailer is removed from the boundaries of the SWPF. CONTRACTOR shall have the right to recycle or reuse any waste to which it receives title under this Agreement and to retain any payments it receives for the sale of recycled or reused materials.

10.2 SWPF Inspection Program. CITY shall establish and maintain a program of operating and monitoring procedures for the SWPF reasonably calculated to prevent the loading of Unacceptable Waste into Trailers. SWPF operators shall be instructed and trained to implement the program.

10.3 Waste Inspection at Disposal Site; Handling of Suspected Unacceptable Waste

A. Notwithstanding anything herein to the contrary: (a) CONTRACTOR shall have no obligation to collect or transport Unacceptable Waste; (b) if CONTRACTOR finds what reasonably appears to be discarded Unacceptable Waste, CONTRACTOR shall promptly notify CITY and the producer of the Unacceptable Waste, if the producer can be readily identified; and (c) title to and liability for any Unacceptable Waste shall remain with the producer of the Unacceptable Waste, even if CONTRACTOR inadvertently collects or disposes of such Unacceptable Waste.

CONTRACTOR shall take immediate action to minimize any environmental damage that may be caused by the delivery of Unacceptable Waste to the Facilities and dispose of that Unacceptable Waste in accordance with all Applicable Laws. CONTRACTOR shall be reimbursed by CITY for handling and disposing of Unacceptable Waste in accordance with Section 10.4 B.

B. CONTRACTOR shall make reasonable efforts to reject all Trailers that CONTRACTOR knows or has reason to know contain Unacceptable Waste. If despite CONTRACTOR's efforts, Unacceptable Waste is delivered to the Disposal Site, CONTRACTOR shall promptly notify the North Idaho Health District, Idaho Department of Environmental Quality, and CITY. CONTRACTOR shall take all steps possible to assist the North Idaho Health District, the Idaho Department of Environmental Quality, and CITY in determining the source of the Unacceptable Waste and the person or persons who delivered the materials and any person or persons who caused, allowed, or facilitated that delivery. Subject to the approval of the North Idaho Health District, Idaho Department of Environmental Quality, and CITY, and obtaining any other necessary approvals, CONTRACTOR shall take all measures necessary to remove Unacceptable Waste from the Facilities and dispose of Unacceptable Waste in a manner consistent with Applicable Law. In the event Unacceptable Waste is delivered to the Facilities despite CONTRACTOR's best efforts to reject that waste in accordance with this Section 10.3, CONTRACTOR shall pay all costs of any investigation, clean-up, disposal, and remediation of the Facilities, or any other property, as necessary, and may seek reimbursement from CITY for those costs in accordance with Section 10.4. Nothing in this Agreement shall create any liability of CITY or CONTRACTOR to any third party for the failure to detect Unacceptable Waste.

C. CONTRACTOR may inspect the contents of all Trailers delivered to the Disposal Site under this Agreement. CITY may be present to observe any inspection conducted under this Article and may, at its sole discretion and cost, inspect any waste delivered to the Disposal Site under this Agreement. If CONTRACTOR discovers Unacceptable Waste or waste that CONTRACTOR suspects is Unacceptable Waste in a Trailer CONTRACTOR shall:

(1) verbally notify CITY of the discovery of the suspected or actual Unacceptable Waste within one (1) hour of that discovery, unless that discovery occurs after 4:00 p.m. (local time), in which event notification shall be given to CITY the next business day.

(2) gather, preserve, maintain and make available to CITY all evidence demonstrating that the Unacceptable Waste was delivered to CONTRACTOR pursuant to this Agreement ,including, without limitation, the time the Trailer was accepted by CONTRACTOR at the SWPF, the transportation route and schedule of the transportation of the Trailer to the Disposal Site, the time the Trailer was delivered to the Disposal Site, any photographs of the Unacceptable Waste or Trailer or otherwise that might establish that the waste is Unacceptable Waste and/or was delivered pursuant to this Agreement, samples of Acceptable Waste from the Trailer that may demonstrate that the Trailer was delivered to the Disposal Site under this Agreement ,and/or may demonstrate the origin of the Unacceptable Waste, laboratory results (if any), any statements or documentation provided by Federal, State or Local authorities regarding

the character of the waste and any other material or documentation CITY reasonably believes is relevant;

(3) test or arrange to have tested, at CONTRACTOR's own expense, the waste to ascertain whether that waste is Unacceptable Waste;

(4) permit CITY to inspect that Unacceptable Waste within seventy-two (72) hours of notice by CONTRACTOR to CITY of the existence of that Unacceptable Waste, test the Unacceptable Waste within a reasonable period of time, and examine all other evidence gathered by CONTRACTOR under Section 10.3 B., above, at any time after the discovery of that Unacceptable Waste; for purposes of any inspection conducted pursuant to this Section, CITY shall have unrestricted access to the Disposal Site and/or any other site or Facility at which the Waste is located; and

(5) after completion of Subsections (1) – (4) above, or such other actions as are agreed to by CITY in writing, dispose of the Unacceptable Waste and seek reimbursement from CITY for the actual reasonable cost of that disposal in accordance with Section 10.4.

10.4 Liability for Testing, Inspecting, handling and/or Disposing of Unacceptable Waste.

A. Absence of Unacceptable Waste. If, after inspecting and/or testing the waste, CITY discovers no Unacceptable Waste, or discovers that the Unacceptable Waste was not delivered to the Disposal Site under this Agreement, CONTRACTOR shall dispose of that waste at no additional cost to CITY and shall reimburse CITY for CITY's costs, if any, of inspecting and/ or testing that waste including, but not limited to, laboratory fees, transportation and handling costs, and labor costs.

B. Procedures After Unacceptable Waste Discovered. If Unacceptable Waste is discovered at the Disposal Site, and there is proof satisfactory to CITY (acting reasonably) that the Unacceptable Waste was delivered to the Disposal Site under this Agreement, and CONTRACTOR complies with all the requirements of this Article, CITY shall pay or reimburse CONTRACTOR for the actual reasonable cost of the inspection, testing, identification, handling and disposal of that Unacceptable Waste, subject to the limitations and conditions of this Article. Payment or reimbursement by CITY will only be made if CONTRACTOR:

(1) complies with the requirements of this Article including, but not limited to, subsections 10.3 A. through C., above;

(2) assists CITY, to the extent possible, in ascertaining the Person previously owning or responsible for the delivery of the Unacceptable Waste to the Transfer Station; and

(3) documents its actual costs, the reasonableness of those costs and that the costs represent the least costly method of inspecting, testing, identifying, handling and/or disposing of the Unacceptable Waste in compliance with Applicable Law.

C. Payments to CONTRACTOR. Any payment or reimbursement made by CITY to CONTRACTOR under this Section shall be paid in four (4) consecutive quarterly installments or a single lump sum at CITY's sole discretion. The first installment or the lump sum payment shall be paid on the fifteenth day of January, April, July or October, whichever date first occurs thirty (30) days after the Unacceptable Waste was discovered at the Disposal Site pursuant to this Article. CITY shall also pay to CONTRACTOR interest at the rate of five percent (5%) accruing on any payment due under this Article from the date the costs are incurred, to handle and Dispose of the Unacceptable Waste, to the date payment for that handling and Disposal is made. Any unresolved disputes arising under this Article relating to CONTRACTOR's actual reasonable costs shall be resolved by arbitration in accordance with Article 17.

10.5 Notice of Change in Law – Unacceptable Waste. CONTRACTOR shall provide CITY with notice of any change in the laws of any State through which the waste is Transported and in which the Disposal Site is located which laws regulate the type of materials which may lawfully be Transported through said State, and/or Disposed of at such Disposal Site, within forty-eight (48) hours of receipt by CONTRACTOR of knowledge of such change, but in no event later than the date such laws become effective.

ARTICLE 11

Indemnification

11.1 CONTRACTOR's Indemnification of CITY.

A. Subject only to the limitations expressly set forth in this Article, CONTRACTOR covenants and agrees that, to the maximum extent permitted by Applicable Law, CONTRACTOR will defend, indemnify and hold CITY harmless from any and all liabilities, actions, damages, claims, demands, judgments, losses, costs, expenses, lawsuits and actions including, but not limited to, reasonable attorney's fees and expenses at trial and on appeal, relating to or resulting from:

(1) any injury to or death of any person or persons, or loss of or damage to property caused by CONTRACTOR or any of its officers, agents, employees, subcontractors (or any officer, agent or employee of any subcontractor), or any Person under the control of or acting at the direction of CONTRACTOR or any subcontractor, arising in connection with or as a result; of

(a) this Agreement;

(b) the performance by CONTRACTOR of its obligations hereunder;

(c) the use or operation of the Facilities by CONTRACTOR; or

(d) the condition of the Facilities or the Disposal Site under the management of CONTRACTOR between the execution of this Agreement and the termination of the Agreement;

(2) any breach of any express or implied warranty arising in connection with any sale of the Facilities to a third party;

(3) any condition of the Facilities, now existing or arising during the Term of this Agreement, relating to hazardous or toxic substances or any other condition that is adverse to the public health and/or environmental impact of the Facilities, now existing or arising during the Term of this Agreement which, under any Applicable Law in appropriate administrative or judicial proceedings, is determined to be unsafe or adverse to the public health or the environment; or

(4) an actual or allegation of infringement, violation or conversion of any patent, license, proprietary right, trade secret or other similar interest, in connection with the operation of the Facilities by CONTRACTOR or the design, technology, processes, machinery or equipment used at the Facilities by CONTRACTOR.

B. Notwithstanding anything express or implied herein to the contrary, or any express or implied limits on CONTRACTOR's indemnity and hold harmless agreement set forth above, CONTRACTOR shall defend and indemnify CITY against, and hold the CITY harmless from, any and all penalties, fines and charges of any Federal, State or Local government having jurisdiction over the Facilities, or of any actions arising out of CONTRACTOR's performance under this Agreement, and any and all liabilities, actions, damages, claims, demands, judgments, losses, costs, expenses, lawsuits and actions including, but not limited to, reasonable attorney's fees and expenses at trial and on appeal, arising from any violation or alleged violation of any Applicable Law by CONTRACTOR in connection with or as a result of the operations at the Facilities or CONTRACTOR's performance of any of its obligations hereunder.

11.2 CITY's Indemnification of CONTRACTOR. Subject only to the limitations expressly set forth in this Article, CITY covenants that to the maximum extent permitted by law, it will indemnify CONTRACTOR against and hold CONTRACTOR harmless from any and all liabilities, actions, damages, claims, demands, judgments, losses, costs, expenses, lawsuits; and actions including, but not limited to, reasonable attorney's fees and expenses at trial and on appeal, relating to or resulting from any injury to or death of any person or persons, or loss of or damage to property caused by CITY or any of its officers, agents, employees, or any person under the control of or alleged to be under the control of or acting at the direction of CITY, to the extent Article VIII, § 4 of the Idaho Constitution and the Idaho Tort Claims Act will allow, caused by, inclusion of Unacceptable Waste, the negligent acts and/or errors or omissions or willful misconduct by CITY, its agents, officers, and employees; violation of any law, rule, regulation, order, permit, or license by the CITY, its agents, officers or employees.

11.3 No Indemnification for Negligent Acts. Neither Party hereto shall be required to indemnify the other or hold the other harmless pursuant to the provisions of this Article with respect to any loss, damage or claim due to the negligence of such other Party.

11.4 Contribution for Joint or Concurrent Negligence. In case of joint or concurring negligence of the Parties giving rise to a loss or claim against either or both of them, each Party shall have full rights of contribution against the other as permitted by law.

11.5 Notice of Claims; Defenses; Settlement.

A. Any Party entitled to indemnification, hereunder (the "Notifying Party") shall notify the indemnifying Party (the 'Responding Party") within ten (10) days of the Notifying Party's receipt of written notice from any third party of any act, omission or occurrence with respect to which the Notifying Party intends to seek indemnification in accordance with this Agreement and, if requested by the Responding Party, shall also supply to the Responding Party all records, data, contracts and documents reasonably related to such third party claims to enable the Responding Party to evaluate such claim for purposes hereof. If the Responding Party replies in writing to the Notifying Party within twenty (20) days from the date of such notice, that it will undertake the defense of the Notifying Party and will hold the Notifying Party harmless with respect to such claims, then no additional attorney's fees incurred by the Notifying Party in its own defense shall be compensable as a claim entitled to indemnity, unless (1) the Responding Party has agreed to pay such fees and expenses; (2) the Responding Party shall have failed to assume the defense of such claim or has failed to employ counsel reasonably satisfactory to the Notifying Party; or (3) the named Parties in any action or proceeding relating to such claim (including any impleaded parties) include both the Responding Party and the Notifying Party, and such Notifying Party has been advised by its counsel that the Notifying Party has a conflicting interest from the Responding Party or that there may be one (1) or more legal defenses available to the Notifying Party which are different from or additional to those available to the Responding Party. The Notifying Party will reasonably cooperate in providing information and testimony to assist in the defense of the matter, but all out-of-pocket costs thereof shall be a part of the indemnified amounts for which the Responding Party shall hold the Notifying Party harmless. Control of the defense of the claims shall be the right and responsibility, in this case, of the Responding Party, which shall have authority to contest, compromise or settle the matter in its sole discretion.

B. In the event the Responding Party replies in writing within twenty (20) days from the date of notice that it accepts responsibility for the indemnified claim regarding the matter in question but does not desire to take an active role in the defense of said matter then, alternatively, the Responding Party may consent to the Notifying Party's selecting an attorney to defend the matter who is satisfactory to the Responding Party, that consent and satisfaction with the selection of that attorney to be evidenced in writing. In that case, however, no matter will be settled or compromised without the written consent of the Responding Party; further, at any time the Responding Party may elect to assume the active control of the matter, including the replacement of the selected counsel by other counsel satisfactory solely to it, and thereafter may consent, settle or compromise the case in its sole discretion.

C. If, on the other hand, the Responding Party replies to the Notifying Party within twenty (20) days from the date of the notice, but denies its responsibility to indemnify and hold the Notifying Party harmless with respect to the claim, both Parties shall attempt to agree upon a mutually satisfactory attorney to represent them and agree on who shall control the defense of the claim and has the authority to approve any proposal, settlement or compromise. If no agreement can be reached, or if the Responding Party does not reply to the Notifying Party within twenty (20) days from the date of the notice, each Party may designate its own attorney,

whose reasonable fees shall be compensable as an indemnified claim to the Notifying Party. Whether or not any such agreement can be reached or the Responding Party does or does not reply, each Party shall reasonably cooperate in providing information and testimony to assist in the defense of the matter, and the costs thereof (including out-of-pocket expenses) shall be a part of the claims which shall be paid by the Party who is later determined to be responsible therefor under the assumptions of liability and other revisions for indemnification under this Agreement. Any indemnification in this Agreement shall include all indemnification of the respective officers, directors, employees, agents, shareholders and successors and assigns of the Notifying Party.

11.6 Beneficiaries of Indemnification Provisions. The foregoing indemnification and hold harmless provisions are for the sole and exclusive benefit and protection of CITY and its successors, CONTRACTOR, and any affiliates of CONTRACTOR, and their respective officers, officials, agents and employees, and are not intended, nor shall they be construed, to confer any rights on or liabilities to any person or persons other than CITY and CONTRACTOR and their respective officers, officials, agents and employees.

11.7 Unacceptable Waste Liability. Notwithstanding Section 11.1, above, CITY shall be liable for losses incurred during Transportation, caused by the presence of Unacceptable Waste in a loaded Trailer and all losses related to the handling and disposal of Unacceptable Waste after CONTRACTOR has properly notified CITY of the discovery of Unacceptable Waste attributable to this Agreement and otherwise complied with Article 10.

11.8 Waiver of Workman's Compensation Immunity. It is further specifically and expressly understood that the indemnification provided in this Article constitutes CONTRACTOR's waiver of immunity under the Idaho Worker's Compensation statutes solely for the purposes of this indemnification and not with respect to claims by any third party.

11.9 Royalties; License Fees; Patents. CONTRACTOR shall pay all royalties fees and license payments, shall defend all lawsuits or claims for patent infringements that may occur in the performance of this Agreement and shall hold CITY harmless from any loss on account thereof.

11.10 No Waiver. Except as otherwise expressly stated herein, the Parties do not, under this Article, waive or surrender indemnity available under any Federal, State, Regional or Local Law. This Article shall survive termination or expiration of the Agreement.

ARTICLE 12

CONTRACTOR and CITY Liability Insurance

12.1 General

A. CONTRACTOR shall obtain, maintain and pay for the insurance coverage designated in this Article from generally recognized and financially responsible insurers that are approved by CITY and licensed in the State of Idaho and whose claims paying ability is rated not less than "A" by A.M. Best Company, Inc. at all times during the Term of the Agreement. The insurance must fully protect CITY from any and all claims, risks and losses in connection with

any activity performed by CONTRACTOR under this Agreement, except Uncontrollable Circumstances unless otherwise designated as insurable events hereunder.

B. CONTRACTOR may, as an alternative and subject to CITY's prior written approval, which may be withheld or granted in its sole discretion, engage in a program of full or partial self-insurance with reasonable reserves set aside by CONTRACTOR to satisfy all or a part of its obligations under this Article.

12.2 Replacement Insurance. In the event CONTRACTOR breaches any provision of this Article, CITY, in its sole discretion may procure and maintain, at CONTRACTOR's sole expense, insurance to the extent CITY reasonably deems proper. In the event CITY obtains such insurance, CONTRACTOR shall reimburse CITY for the cost of that insurance within fifteen (15) days of receiving written notice from CITY to do so or, in CITY's sole discretion, CITY may reduce the Service Fee due CONTRACTOR in accordance with Section 8.4 F.

12.3 Required Coverage. Within sixty (60) days of execution of this Agreement, CONTRACTOR, at its sole expense, shall obtain and file with CITY a certified copy of the certificates of insurance along with the endorsement that include the coverage required under this Article which coverage shall take effect on the date any operations constituting part of the Project under the Agreement commence. All insurance shall be subject to CITY's approval of the company, terms and coverages.

The insurance policies must provide the following:

A. Coverages

Extended Bodily Injury
Employees as Additional Insured
Premises/Operations Liability (M&C)
Products and Completed Operations Liability through guarantee period
Blanket Contractual Liability
Broad Form Property Damage Liability (including completed operations)
Stop Gap or Employers Contingent Liability Automobile Liability
Automobile Liability, including coverage for owned, non-owned, leased or hired vehicles, including "Any Auto" coverage as contained in ACORD Certificate of Liability Insurance
Explosion, Collapse, Underground damage (referred to as "X.C.U.")
Owners and Contractors Protective Liability Railroad Protective Coverage
Pollution Liability (same coverage as Section 12.4 D. pertaining to marine operations)

B. Minimum Limits for all Coverages (unless otherwise specified herein):

$1,000,000 per occurrence;
$5,000,000 annual aggregate;

The coverage limits set forth in this Article shall increase or decrease annually to reflect one hundred percent (100%) of the increase or decrease in the CPI for the previous year. These limits are subject to revision by CITY to protect the interests of CONTRACTOR and CITY.

C. Separation of Insureds. The insurance shall be endorsed to include a "cross liability," "severability of interests," or "separation of insureds" indicating essentially that:

except with respect to the limits of insurance, and any rights or duties specifically assigned in this coverage part to the first named insured, this insurance applies as if each named insured were the only named insured and separately to each insured against whom claim is made or suit is brought.

D. Change in Coverage. All policies of insurance provided under this Agreement shall state:

The types and amounts of coverages provided by this policy to CITY or any other named or additional insureds shall not be terminated, reduced or otherwise modified in any respect without providing at least thirty (30) calendar days prior written notice to:

City of Moscow, Idaho
206 East Third
P O Box 9203
Moscow, Idaho 83843
Attention: Tim Davis, Sanitation Manager

E. Compliance Required. Failure of CONTRACTOR to maintain any and all of the terms of the foregoing insurance provisions shall be considered a material breach of this Agreement and cause for its termination at the option of CITY, subject to the provisions of Section 16.2 C.

12.4 CONTRACTOR's current mode of transportation for performance of its duties under this Agreement is by tractor-trailer. If CONTRACTOR opts to change current mode of transportation, CONTRACTOR shall notify CITY and provide sufficient assurances that CONTRACTOR has insurance coverage for such mode of transportation that includes Umbrella coverage of not less than $15,000,000 (fifteen million).

12.5 Workers Compensation. CONTRACTOR shall provide workers compensation or evidence of participation in the Idaho State Department of Idaho State Industrial Commission program and any other program in any other State in which operations are performed by CONTRACTOR to satisfy its obligations hereunder, or, in lieu thereof, CONTRACTOR may provide a self-insurance or alternate insurance program for workers' compensation if allowed by Applicable State Law and approved by CITY in CITY's sole discretion.

12.6 Minimum Insurance. Maintenance of insurance by CONTRACTOR, as specified in this Article, shall constitute the minimum coverage required and shall in no way lessen or limit the liability or responsibility of CONTRACTOR under this Agreement. CONTRACTOR shall carry, at its own expense, any additional insurance it deems necessary.

12.7 Change in Law. CONTRACTOR immediately shall increase the amounts of insurance required to reflect any changes in Idaho State, any other State where the Project is carried out, Federal or other Applicable Law to ensure that the insurance provided shall cover, at a minimum and in addition to the designated insurance requirements listed in this Article, the maximum limit under any applicable tort claims act.

12.8 Failure to Provide Insurance. CONTRACTOR's failure to fully comply with any provision of this Article shall be considered a Class C Default under this Agreement.

12.9 Unavailability. In the event that any of the insurance required by this Article becomes unavailable, or is available only on a "claims made" rather than on an "occurrence" basis, CONTRACTOR shall secure insurance with substitute provisions providing as much protection to CITY as is reasonably available in the insurance marketplace and approved in writing by CITY.

12.10 Collection of Insurance Proceeds. If any of the Facilities are damaged or destroyed due to events for which CONTRACTOR is obligated to carry insurance, CONTRACTOR shall act diligently to promptly collect and apply insurance proceeds to the repair or reconstruction of those Facilities.

ARTICLE 13

Alternate Facilities

13.1 Alternate Facilities; Service Fee Adjustment. CONTRACTOR may, with CITY's written approval, use Facilities, sites or processes different from the Facilities to carry out CONTRACTOR's obligations under this Agreement. CITY may adjust applicable Service Fee components to reflect reasonable actual cost increases or decreases in providing and operating those alternate Facilities.

13.2 Disputes. Unresolved disputes concerning Service Fee calculations or adjustments under this Article shall be resolved by arbitration in accordance with Article 17.

ARTICLE 14

Coordination Meetings

14.1 Initial Coordination Meeting. Prior to the commencement of services under this Agreement, CONTRACTOR, CITY, principal subcontractors and others requested by either Party, shall meet in Moscow, Idaho, to discuss scheduling, processes, materials, change orders, personnel and any other matters the Parties deem appropriate.

14.2 Periodic Coordination Meetings and Reports. CITY and CONTRACTOR shall hold periodic coordination meetings in Moscow, Idaho, but no less than one (1) every six (6) months to review the progress of the work and to discuss operations, problems and/or complaints made by third parties. Any cost incurred by any Person to attend a coordination meeting shall be borne by that Person. Either CITY or CONTRACTOR may organize, call and notify the other Party of that meeting. If requested, CONTRACTOR shall submit a report to CITY no later than ten (10) calendar days before that meeting regarding operations, problems, complaints or any other matter relating to or arising under the Agreement.

ARTICLE 15

Additional or Deleted Work

15.1 Payment or Credit for Additional Services. All requests for payment for services or work under this Agreement, in addition to the services of work described in the Agreement, shall be made only under the conditions and procedures of this Article. For purposes of this Article, the term "additional work" means work that is in addition to the Project or other work required to be performed under the Agreement or any amendments thereof, but does not include any work required to comply with any changes in law, statutes, rules, regulations, ordinances, permit(s), permit conditions or regulatory provisions. Nothing in this Article is intended to negate or lessen any other precondition or procedure for payment or reimbursement provided in this Agreement.

15.2 Additional Work.

A. CITY shall submit to CONTRACTOR a written request to perform any work or services additional to those performed under this Agreement. Within thirty (30) days of that request, CONTRACTOR may submit to CITY an itemized proposal stating the costs for performing the additional work or services, a schedule and the impact the performance of that additional work or services will have on CONTRACTOR's performance under this Agreement. CONTRACTOR's proposal shall be based on Contractor's reasonable estimate for performing the additional work or services.

B. Upon receipt of CONTRACTOR's proposal, CITY may request CONTRACTOR perform the relevant additional work or services within thirty (30) days after receipt of Contractor's proposal. The City shall pay Contractor a fee equal to Contractor's proposal. If CITY approves CONTRACTOR's written proposal, CITY shall notify CONTRACTOR in writing and order CONTRACTOR to proceed. Unless CONTRACTOR performed to remedy what a reasonable person would recognize as an emergency, CONTRACTOR shall not be entitled to Service Fee increases for the additional work or services performed unless CITY orders CONTRACTOR to perform the work or services in accordance with this Article.

C. Unresolved disputes concerning the calculation of or adjustments to Service Fees under this Section shall be resolved by arbitration in accordance with Article 17.

ARTICLE 16

Defaults in Performance of the Agreement

16.1 CONTRACTOR Default. There shall be four (4) classes of defaults by CONTRACTOR in its performance under this Agreement:

A. A Class A default is:

(1) Without the consent of CONTRACTOR, the entrance of a decree or order under Title 7 or 11 of the United States Code, or any other applicable bankruptcy, insolvency, reorganization or similar law appointing a receiver, liquidator, trustee or similar official for all or any substantial part of CONTRACTOR's properties, and such decree or order remains in effect (and is not stayed) for sixty (60) consecutive days; or

(2) The filing by CONTRACTOR of a petition, answer or consent seeking relief under Title 7 or 11 of the United States Code, or any other similar applicable bankruptcy, insolvency, reorganization or other similar law, or consent to the institution of proceedings thereunder or the filing of that petition or to the appointment of a receiver, liquidator, trustee, or other similar official for all or any substantial part of the properties of CONTRACTOR, or the making of a general assignment for the benefit of a creditor; or

(3) Failure to provide, replace and/or maintain the Agreement performance bond, letter of credit or other performance guarantee required by Section 6.4.

(4) CONTRACTOR's failure to commence Waste Transport and Disposal service with Facilities properly permitted under Applicable Law, in substantial and material compliance with the Specifications, on the date designated herein or by CITY, if the date of commencement of service is extended.

(5) Direct or indirect change of control or transfer of controlling interest in the beneficial ownership of CONTRACTOR other than as expressly permitted under in Section 18.3;

(6) Contamination of the environment by CONTRACTOR in violation of any Applicable Law as a result of its operations under this Agreement.

B. A Class B default includes, on the commencement of services under this Agreement, CONTRACTOR's:

(1) Failure to perform the basic Transport and/or Disposal services required under this Agreement and it appears to CITY's Representative, in that Representative's reasonable judgment, that CONTRACTOR has abandoned the Project;

(2) Failure to substantially perform the basic Transport and/ or Disposal services under this Agreement on three (3) or more occasions of three (3) days duration in any given year.

C. A Class C default includes CONTRACTOR's failure to procure and maintain insurance under Article 12.

D. A Class D default includes a delay of operations as described in Section 1.3 of the specifications or any other failure by CONTRACTOR to perform its obligations under this Agreement.

Notwithstanding anything in this Section to the contrary, a delay or interruption in the performance of all or any part of the Agreement resulting from Uncontrollable Circumstances shall not be deemed a default under this Section.

16.2 Consequences of CONTRACTOR Defaults.

A. Class A Default. In the event of a Class A default, CONTRACTOR or Surety shall be permitted to remedy the default within ten (10) days from notice of the default by CITY. If the Class A default is not remedied within ten (10) days from the notice of the default, CITY may, at its sole option:

(1) Terminate the Agreement and use any other method or Person to transport and/or dispose of waste and may sue for actual damages;

(2) Seek a judicial remedy of specific performance; or

(3) Pursue any combination of the foregoing or any other remedy provided under this Agreement or by law.

B. Class B Default. In the event of a Class B default, CONTRACTOR or Surety shall be permitted to remedy the default within ten (10) days from notice by CITY and shall pay to CITY, CITY's actual damages and costs for providing alternative Transportation and/or Disposal of Acceptable Waste or otherwise operating after the change in ownership under Section 18.3. If the Class B default is not remedied within ten (10) days, CITY may at its sole discretion:

(1) Terminate the Agreement and use any other method or Person to Transport and/or Dispose of Acceptable Waste;

(2) Seek the appointment of a receiver for the Facilities in the Superior or other Court with jurisdiction of over the Facilities, such receiver to continue operation of those Facilities under the direction of that Court;

(3) Seek judicial remedy or specific performance;

(4) Pursue any combination of the foregoing or any other remedy provided under this Agreement or by law.

C. Class C Default. In the event of a Class C default, CONTRACTOR or the Surety shall be permitted to remedy the default within fifteen (15) days from notice by CITY, and from the date of that notice to the date the default is remedied shall pay to CITY liquidated damages for failure to procure and/or maintain insurance in the types and amounts required by Article 12, a per day fee equal to twice the annual cost of obtaining that insurance, on the day of the default, divided by three hundred sixty fix (365) (i.e., twice the daily cost of the insurance).

D. Class D Default. In the event of a delay of operations as defined in Article 1 of this Agreement, Contractor shall be responsible to reimburse CITY for any out-of-pocket costs, plus twenty percent (20%) incurred by CITY as a result of such delay of operations. If Contractor does not remedy any such delay of operations within twelve (12) hours after receipt of notice from CITY, it shall be considered a Class D Default. If the same or similar Class D Default occurs on two (2) occasions within a three (3) month time period, the Class D Default will be considered chronic and material to the operations under the Agreement, and CITY, at its sole option, may terminate the Agreement.

E. Termination. In addition to liquidated damages, specific performance, and any other remedies provided above, CITY shall have the right to terminate this Agreement:

(1) Immediately on the occurrence of an event of default described in Section 16.1 A. or 16.1 B., and

(2) On the occurrence of any event of default described in Section 16.1 C. or 16.1 D., if that event of default shall occur and be continuing for ninety (90) days beyond the date CONTRACTOR receives the default notice, or occurs on a chronic basis and is material to CONTRACTOR's operations under the Agreement.

Any unresolved dispute, concerning whether an event of default is chronic or material for purposes of terminating the Agreement, shall be resolved in accordance with Article 17. In the event CITY terminates the Agreement, CONTRACTOR shall be entitled to payment of any Service Fee due prior to the effective date of CITY's notice of termination of this Agreement, but only to the extent the amount of such Service Fee exceeds amounts owed to CITY. CITY shall retain the right to pursue any cause of action or assert any claim or remedy it may have against CONTRACTOR despite its termination of the Agreement.

16.3 Default Procedure

A. Notice. To initiate default proceedings under this Article, CITY's Representative shall give CONTRACTOR and its Surety written notice of the default specifying with particularity the event of default that has occurred, and specifying CITY's intention to declare CONTRACTOR in default. Unless CONTRACTOR shows cause to CITY's satisfaction why it should not be declared in default under the Agreement within the applicable cure period, CITY shall declare CONTRACTOR in default and shall be entitled to the remedies set forth in Section 16.2 above.

B. No Adjustment for CITY Savings. If in the event of a default, CITY secures performance of the services described in this Agreement at a cost less than the Service Fees established in accordance with Article A, as adjusted in accordance with this Agreement, CITY shall retain that difference.

C. Procedure for Collection of Liquidated Damages. CITY may draw upon the letter of credit provided by CONTRACTOR (in the event a letter of credit is used), if CITY determines that a default has occurred and that CITY has or will incur costs as a result. CITY may draw amounts equal to actual costs or liquidated damages, as applicable. In the event of a court or arbitrator's determination that all or part of any draw was not justified, CITY shall repay the amount overdrawn to CONTRACTOR together with interest at the rate of CONTRACTOR's actual interest costs incurred in connection with the draw or portion thereof.

D. Offset of Service Fees. Any amount due CONTRACTOR under this Agreement at the time of default shall be reduced by any amount due CITY under this Agreement.

16.4 City Default. For purposes of this Agreement, a CITY-event of default shall constitute the failure or refusal by CITY to fulfill any of its material obligations under this Agreement (unless that failure or refusal results from an Uncontrollable Circumstance). To initiate default proceedings under this Article, CONTRACTOR's Representative shall give CITY written notice of that default specifying with particularity the event of default that has occurred, and specifying CONTRACTOR's intention to declare CITY in default. If within thirty (30) days of notice by CONTRACTOR, except as provided in Subsection D. below, CITY has failed to cure the default or give CONTRACTOR reasonable assurances that the default or threatened default will be promptly cured, CONTRACTOR shall have the right to any or all of the following remedies to the extent provided by law:

A. Specific Performance. For each and every default, CONTRACTOR shall be entitled to a judicial remedy of specific performance or mandamus requiring CITY to specifically perform CITY's responsibilities as provided in Article 7; it being agreed that in the case of a default by CITY, CONTRACTOR's remedies at law will be inadequate.

B. Injunctive Relief.

(1) For each and every default, CONTRACTOR shall be entitled to the remedy of a permanent or temporary injunction, either in mandatory or prohibitory form, it being agreed that in the case of a default, CONTRACTOR's remedy at law is inadequate.

(2) If the governing body of CITY places, as an agenda item before its deliberative body, any proposed ordinance, rule or other regulation that threatens, on its effective date, to precipitate a default of CITY's responsibilities under Article 7, CONTRACTOR may seek an injunction from a court of competent jurisdiction enjoining CITY's deliberative body from enacting that ordinance, rule or regulation, if CONTRACTOR can show that CONTRACTOR will be irreparably damaged as a result of the enactment of that proposed ordinance, rule or regulation.

C. For each and every CITY default, CONTRACTOR may charge to CITY the CONTRACTOR's actual reasonable costs incurred as a result of that default, but in no event greater than three thousand dollars ($3,000) per day.

D. Termination or Suspension of CONTRACTOR's Performance of the Agreement. For any CITY default that, within sixty (60) days of CITY's receipt of the notice required under this Section, is not remedied and for which CITY does not give CONTRACTOR reasonable assurance that it will be remedied, and is material to CITY's operations under the Agreement, CONTRACTOR shall be entitled to terminate the Agreement.

E. Limitation of Liability of CITY. The obligations of CITY under this Agreement are limited obligations payable solely from such amounts as may lawfully be paid by CITY for services of the type required to be rendered by CONTRACTOR under this Agreement. The obligations of CITY hereunder shall not be payable from the general funds of CITY, and the incurrence or non-performance of such obligations shall not constitute or create a legal or equitable pledge of, or lien or encumbrance upon, or claim against, any of the assets or property of CITY or upon any of its income, receipts or revenues other than upon its income receipts and revenues derived from its regulation and operation of a system for the handling of solid waste within its boundaries. The execution and delivery of this Agreement by CITY shall not impose any personal liability on the members, officers, employees or agents of CITY. No recourse shall be had by CONTRACTOR for any claims based on this Agreement against any member, officer employee or other agent of CITY in his or her individual capacity, all such liability, if any, being expressly waived by CONTRACTOR by the execution of this Agreement.

16.5 CONTRACTOR's Bankruptcy/Receivership. If during the Term of this Agreement, CONTRACTOR becomes insolvent, is dissolved, files a petition under any bankruptcy statute, is the debtor in any involuntary bankruptcy case that is not dismissed within sixty (60) days after the petition commencing that case is filed, makes a general assignment for the benefit of creditors, or if a receiver is appointed for the benefit of its creditors or, on account of its insolvency, such event could impair or frustrate CONTRACTOR's performance of this Agreement. Therefore, in addition to other remedies provided in the Agreement, upon the occurrence of any one (1) or more of those events, CITY shall be entitled to obtain from CONTRACTOR or its successor-in-interest, adequate assurance of future performance in accordance with the terms and conditions of this Agreement. Failure of CONTRACTOR and Surety to comply with that request within ten (10) calendar days of service on CONTRACTOR and Surety of a written request from CITY for that assurance, shall entitle CITY to terminate the Agreement or suspend CONTRACTOR's performance of the Agreement. CITY shall not be bound to the Agreement by any trustee or receiver appointed to take possession of any of the Facilities or CONTRACTOR's business.

16.6 No Waiver by CITY. Nothing in this Article, and no actions taken pursuant to this Article, shall constitute a waiver or surrender of any rights, remedies, claims or causes of action that CITY may have against CONTRACTOR or its Surety under any other provision of this Agreement or any provision of law.

ARTICLE 17

Dispute Resolution

17.1 Good Faith Negotiation; Arbitration.

A. The Parties shall attempt to resolve any and all disputes to the mutual satisfaction of both Parties by good faith negotiations.

B. Whenever a Party desires to initiate the dispute resolution process set forth in this Article, it shall do so by giving a dispute notice to the other Party. Upon delivery of any dispute notice, the Representative of the recipient thereof shall deliver to the Party giving that dispute notice a signed and dated receipt therefore, which receipt shall serve as conclusive evidence of the date upon which such dispute notice was delivered, notwithstanding the provisions of Section 2.11. Within five (5) days after the delivery of a dispute notice, the Parties shall meet for the purpose of negotiating a resolution of the dispute.

C. Subject to the conditions and limitations of this Article, controversies or claims arising out of or relating to the Service Fee, payment to CONTRACTOR or other calculations under Articles 6, 7, 8 and 16 of this Agreement, and any other unresolved disputes designated for arbitration in the Agreement, shall be exclusively settled by arbitration in accordance with this Article subject to the right of appeal as provided herein. All other controversies and claims shall be decided exclusively by the District Court of the Second Judicial District of the State of Idaho, in and for the County of Latah, unless otherwise agreed to by the Parties.

17.2 Initiation of Arbitration. If any dispute related to the calculation of the Service Fee or any payment to CONTRACTOR or any other fee or cost required under this Agreement is not resolved by negotiations of the Parties within twenty (20) days after the date either Party delivers to the other a notice of dispute, either Party shall have the option to submit that dispute for resolution pursuant to arbitration as provided in this Article 17 by delivering a request for arbitration to the other Party (an "Arbitration Request").

17.3 Selection and Qualification of Arbitrators.

A. Designation. Judicial Arbitration and Mediation Services of Seattle, Washington (JAMS) shall generate and deliver to the Parties a list of five (5) potential arbitrators. Each Party shall strike one (1) name from the list and return the list to JAMS, which shall appoint the arbitrator from among the remaining names.

B. Qualifications. The arbitrator shall be an attorney licensed to practice law in the State of Idaho or Washington who has served as a full-time judge of a court of general jurisdiction of the State of Idaho or Washington. He/she shall be selected from an appropriate panel of experienced arbitrators as established by JAMS.

C. Replacement. If the arbitrator declines to act, dies or is otherwise unable to participate, JAMS shall designate a new arbitrator. If the impartial arbitrator declines, dies or is otherwise unable to act, a new arbitrator shall be chosen pursuant to subparagraph A.

17.4 Powers of Arbitrator. The arbitrator shall have full power to make such regulations and to give such orders and directions as he/she shall deem expedient with regard to the matters submitted to the arbitrator for resolution, as well as in respect to the mode and times of executing and performing any of the acts, deeds, matters and things which may be awarded or directed to be done. Without limiting the generality of the foregoing, the arbitrator shall proceed with the following enumerated powers:

A. Non-appearance. The arbitration may proceed in the absence of any Party or representative who, after due notice, fails to appear or fails to obtain a continuance. However, an award shall not be made solely on the default of a Party, and the arbitrator shall require the appearing Party who is present to submit such evidence as necessary for the making of an award.

B. Pre-Hearing Matters. The arbitrator may conduct such pre-hearing conferences as are necessary in his/her discretion to expedite and resolve the dispute. There shall be no discovery or dispositive motion practice except as may be permitted by the arbitrator; provided, however that any such discovery or dispositive motion practice shall not conflict with or extend the time limits specified herein. If the arbitrator decides, in his or her sole discretion, that independent experts should be retained to determine particular issues, the arbitrator may retain such experts at the Parties' expense, and may award such expenses as part of the award in favor of the prevailing Party.

17.5 Conduct of Proceedings.

A. Rules. The arbitrator shall not be bound by any rules of civil procedure or evidence, but rather shall conduct the hearing and other proceedings in a fair and equitable manner.

B. Hearing Date and Duration. The arbitration hearing shall commence not later than thirty (30) calendar days after the appointment of the arbitrator.

C. Evidence. The arbitrator may require the Parties to submit certain evidence by written declaration or in such other manner as the arbitrator deems appropriate. The arbitrator shall consider such written and oral testimony as reasonable business persons would use in the conduct of their day-to-day affairs. Live testimony and cross-examination shall be limited to that necessary to insure a fair hearing to the Parties.

D. Venue. The arbitration hearing shall be held in Moscow, Idaho unless all Parties agree otherwise.

17.6 Decision – Right of Appeal. The arbitrator shall make his or her award within thirty (30) days following the conclusion of the arbitration hearing. In rendering the award, the arbitrator shall set forth written findings of fact and conclusions of law. The award shall be final and binding upon the Parties, subject to the right of appeal which shall be exercised in the form of an original action in the Latah County District Court, with the matter to be tried to the court de novo. Any action which constitutes an appeal from the arbitrator's award shall be filed with the court and served upon the other Party within thirty (30) days from the date of receipt of notice of

the award by the appellant and otherwise shall be barred. In the event the appellant is not the prevailing Party in the action as determined by the court, then the court shall award the other Party its reasonable costs, attorneys' fees, consultant fees, expert witness fees, and other costs reasonably incurred in defense of the appeal.

17.7 Provisional Remedies. Pending the selection of the arbitrator, any Party may request JAMS to appoint an arbitrator for the limited purpose of awarding preliminary relief. This award may be immediately entered in any Federal or State Court having jurisdiction thereof even though the decision on the underlying dispute may still be pending. Once appointed, the arbitrator may, upon request of a Party, issue a superseding order to modify or reverse such preliminary relief or may himself/herself order preliminary relief pending a full hearing on the merits of the underlying dispute. Any such initial or superseding order of preliminary relief may be immediately entered in any Federal or State Court having jurisdiction thereof, even though the decision on the underlying dispute may still be pending. Such preliminary relief may be granted by the arbitrators only after notice to and opportunity to be heard by the opposing Party unless the Party applying for such relief demonstrates that its purpose would be rendered futile by giving notice.

17.8 Final Remedies; Arbitrator's Fees. The arbitrator may grant any remedy or relief that the arbitrator deems to be just, equitable and within the scope of the Parties' agreement, including specific performance of a contract or injunctive relief; provided, however, that the arbitrator may not award any punitive or exemplary damages. Each Party shall be responsible for its own attorney's fees and costs incurred in the arbitration proceeding. The arbitrator's fees and arbitration expenses shall be borne equally among the Parties.

17.9 No Consolidation. There shall be no consolidation of any arbitration between CITY and CONTRACTOR with any other arbitration involving, arising from or relating to the Project, without prior written approval from CITY.

17.10 Expedited Procedures. In the event that CITY determines, in its sole opinion, that the public interest requires a speedy resolution of any arbitrable controversy or claim regardless of the amount, CITY shall have the option of electing resolution of the controversy or claim by the Expedited Procedures of the Commercial Arbitration Rules of the American Arbitration Association (Rules 54 through 58).

17.11 Venue. The Parties agree that proper venue for any judicial proceeding to enforce any decision or award made by an arbitrator under this Section shall be exclusively in Latah County in the State of Idaho. In the event of litigation concerning it, it is agreed that proper venue shall be the District Court of the Second Judicial District of the State of Idaho, in and for the County of Latah.

17.12 Attorney Fees and Costs. Each Party shall be responsible for their own attorney fees and costs incurred during the arbitration process as set forth in Section 17.8 above. In the event an appeal of an arbitration decision is filed or other suit or action to enforce any right or award under an arbitration decision is instituted, the prevailing Party shall be entitled to reasonable attorney fees and costs from the losing Party.

17.13 Standing. Only CITY and CONTRACTOR shall have standing to bring or become a Party to arbitration claims or legal actions under this Agreement.

ARTICLE 18

Successors; Assignment

18.1 Contractor Delegation. CITY executes this Agreement with CONTRACTOR as the qualified Party to accomplish the Project. CONTRACTOR's delegation of any Agreement duties shall require the prior written consent of CITY. Any delegation of duties shall not relieve CONTRACTOR or the Surety of any liability and/or obligation to perform.

18.2 Assignment. CONTRACTOR shall not assign any rights or obligations under or arising from this Agreement without the prior written consent of CITY, unless otherwise permitted under Section 18.3.

18.3 Change in Control or Ownership. Any direct or indirect change in control or the transfer of a direct or indirect controlling interest in the beneficial ownership of CONTRACTOR shall constitute a Class B default under the terms of this Agreement, unless CITY consents to that transfer, such consent shall not be unreasonably withheld, "The transfer of a direct or indirect interest of CONTRACTOR" shall include, but is not limited to, the transfer or assignment of twenty-five percent (25%) or more of the beneficial ownership of CONTRACTOR to or from a single entity, unless CITY consents to that transfer or assignment; however, the following transfers or assignments shall not be construed as "the transfer of a controlling interest of CONTRACTOR": (a) intra-company transfers in the form of transfers between different subsidiaries or branches of CONTRACTOR's parent corporation; or (b) if CONTRACTOR, or its parent corporation is a closely held corporation, transfers or assignments between individuals who own, in whole or in part, the parent or any subsidiary, including transfers or assignments between or to (1) the individuals who own, in whole or in part, the parent or subsidiary; (2) the spouses, surviving spouses and linear descendants (including adopted children) of the persons described in (b)(1), above; (3) a trust estate, corporation, partnership or other entity owned by the persons described in (b)(l), above; and (4) a corporate trustee designated to act in a fiduciary capacity for the estate or trust of any person described in (b)(l), above.

Notwithstanding the foregoing, CITY may, in its sole discretion and at CONTRACTOR's sole expense (including, but not limited to, CITY's attorney's fees, if any), determine that new ownership can adequately and faithfully render the service called for in this Agreement for the remaining Term of the Agreement, and CITY may then elect to execute a novation, all owing new ownership to assume the rights and duties of this Agreement and releasing the previous ownership of all obligations and liability. The new ownership would then be solely liable for any work and/or claims related to this Agreement.

18.4 Binding Effect. This Agreement shall bind and inure to the benefit of the successors or assigns hereto, whether by merger, consolidation, transfer of assets, or transfer of ownership of CONTRACTOR.

ARTICLE 19

Dissolution of CITY and Successor to CITY

In the event that CITY is dissolved or its solid waste functions and powers, relative to this Agreement, are taken from CITY by legislative act or by referendum of the people, or by agreement, all of the duties, rights, and remedies of CITY under the Agreement, including, but not limited to, all bonds executed for this Agreement, shall remain in full force and effect and shall be transferred to either (i) the successor to CITY as specified by the legislative act or referendum by which CITY is dissolved; or (ii) if no successor to CITY is specified by the relevant legislation or referendum, the State of Idaho shall be deemed to be the successor to CITY under this Agreement.

ARTICLE 20

Term; Option to Renew; Termination

20.1 Initial Term. The initial Term of this Agreement shall begin on its execution, and, unless renewed or sooner terminated by CITY as provided in this Agreement, shall end seven (7) years from the date of commencement of service.

20.2 CITY's Option to Renew. CITY shall have the right to renew the Agreement for two (2) additional periods of five (5) and five (5) years in duration under the same provisions and for the same Service Fee calculated in accordance with Article 8 of this Agreement. CITY shall give CONTRACTOR one hundred twenty (120) days written notice of its intention to exercise its option to renew the Agreement. If CITY does not exercise its option to renew the Agreement, it will terminate upon the last day of the current Agreement term.

20.3 New Performance Guarantee of CONTRACTOR. In the event CITY elects to renew the Agreement, CONTRACTOR must provide to CITY, at least ninety (90) days before the expiration of the then current period, a new performance guarantee acceptable to CITY, in its sole discretion, pursuant to Section 6.4.

DATED this 4 day of NOVEMBER, 2019.

CONTRACTOR	CITY
Finley-Buttes Limited Partnership	City of Moscow, Idaho
_____	_____
	Bill Lambert, Mayor
	ATTEST:

Laurie M. Hopkins, City Clerk

ACKNOWLEDGMENT

STATE OF Oregon)
) ss.
COUNTY OF Wasco)

On this 4th day of November, 2019, before me, a Notary Public in and for said State, appeared Brian Evola, known to me to be the person named above and acknowledged that he/she executed the foregoing document as the duly authorized representative for Finley-Buttes Limited Partnership.

Notary Public for the State of Oregon
Residing at The Dalles
My commission expires 6-26-2021

OFFICIAL SEAL
MARIAN MICHELLE KRUEGER
NOTARY PUBLIC - OREGON
COMMISSION NO. 963904
MY COMMISSION EXPIRES JUNE 26, 2021

Excel
BONDS & INSURANCE

January 7, 2019

Finley - Buttes Limited Partnership
Attn: District Manager
PO Box 350
Boardman, OR 97818

District # 2050
Bond # 41089118

RE: Performance Bond
City of Moscow, ID
Waste Hauling Contract

Dear District Manger,

Enclosed you will find the original and a copy of the continuation certificate for the above referenced bond. Please have the original certificate filed with the Obligee and retain a copy for your records.

If this bond is no longer needed, please return the original continuation certificate to Home Office in Texas. Your Corporate office will be requesting approval from you for payment of the renewal.

Feel free to call with any questions or concerns.

Sincerely,

Lisa Beaucur

Encl.

CC: Waste Connections, Inc.
Samantha Gordon
SamanthaG@WasteConnections.com

Excel
BONDS & INSURANCE

Bond Continuation Certificate
Platte River Insurance Company

January 7, 2019

District # 2050

Principal:

Finley - Buttes Limited Partnership
Attn: District Manager
PO Box 350
Boardman, OR 97818

It is agreed that the bond mentioned below hereby continues in force for the new term mentioned below, subject to all the covenants and conditions of the original bond referred to below.

This continuation is issued upon the express condition that the liability under said bond and all continuations thereof shall not be cumulative and shall in no event exceed the total sum referenced below.

Bond Type:	Performance Bond
Bond Description	Waste Hauling Contract
Obligee:	City of Moscow, ID
Bond Amount:	$417,927.00
Bond Number:	41089118

New Term

Effective Date:	02/17/2019
Expiration Date:	02/17/2020

Platte River Insurance Company

By: _____
Lisa Betancur, Attorney-In-Fact

PHONE (916) 971-8844 / FAX (916) 971-8840
3620 AMERICAN RIVER DR. SUITE 125, SACRAMENTO, CA 95864
CALIFORNIA LICENSE #0B53997

PLATTE RIVER INSURANCE COMPANY
POWER OF ATTORNEY

41405472

KNOW ALL MEN BY THESE PRESENTS, That the **PLATTE RIVER INSURANCE COMPANY**, a corporation of the State of Nebraska, having its principal offices in the City of Middleton, Wisconsin, does make, constitute and appoint

----------BROOKE A. SKEEN; DAVID W. GARESE; AUDREY C. SKEEN; LISA BETANCUR----------

its true and lawful Attorney(s)-in-fact, to make, execute, seal and deliver for and on its behalf, as surety, and as its act and deed, any and all bonds, undertakings and contracts of suretyship, provided that no bond or undertaking or contract of suretyship executed under this authority shall exceed in amount the sum of

----------ALL WRITTEN INSTRUMENTS IN AN AMOUNT NOT TO EXCEED$20,000,000.00----------

This Power of Attorney is granted and is signed and sealed by facsimile under and by the authority of the following Resolution adopted by the Board of Directors of **PLATTE RIVER INSURANCE COMPANY** at a meeting duly called and held on the 8th day of January, 2002.

"**RESOLVED**, that the President, Executive Vice President, Vice President, Secretary or Treasurer, acting individually or otherwise, be and they hereby are granted the power and authorization to appoint by a Power of Attorney for the purposes only of executing and attesting bonds and undertakings, and other writings obligatory in the nature thereof, one or more resident vice-presidents, assistant secretaries and attorney(s)-in-fact, each appointee to have the powers and duties usual to such offices to the business of this company; the signature of such officers and seal of the Company may be affixed to any such power of attorney or to any certificate relating thereto by facsimile, and any such power of attorney or certificate bearing such facsimile signatures or facsimile seal shall be valid and binding upon the Company, and any such power so executed and certified by facsimile signatures and facsimile seal shall be valid and binding upon the Company in the future with respect to any bond or undertaking or other writing obligatory in the nature thereof to which it is attached. Any such appointment may be revoked, for cause, or without cause, by any of said officers, at any time."

In connection with obligations in favor of the Florida Department of Transportation only, it is agreed that the power and authority hereby given to the Attorney-in-Fact includes any and all consents for the release of retained percentages and/or final estimates on engineering and construction contracts required by the State of Florida Department of Transportation. It is fully understood that consenting to the State of Florida Department of Transportation making payment of the final estimate to the Contractor and/or its assignee, shall not relieve this surety company of any of its obligations under its bond.

In connection with obligations in favor of the Kentucky Department of Highways only, it is agreed that the power and authority hereby given to the Attorney-in-Fact cannot be modified or revoked unless prior written personal notice of such intent has been given to the Commissioner – Department of Highways of the Commonwealth of Kentucky at least thirty (30) days prior to the modification or revocation.

IN WITNESS WHEREOF, the **PLATTE RIVER INSURANCE COMPANY** has caused these presents to be signed by its officer undersigned and its corporate seal to be hereto affixed duly attested, this 3rd day of May, 2017.

Attest:

John E. Rzepinski
Vice President, Treasurer & CFO

Suzanne M. Broadbent
Assistant Secretary

PLATTE RIVER INSURANCE COMPANY
CORPORATE SEAL
NEBRASKA

PLATTE RIVER INSURANCE COMPANY

Stephen J. Sills
CEO & President

STATE OF WISCONSIN
COUNTY OF DANE } S.S.:

On the 3rd day of May, 2017 before me personally came Stephen J. Sills, to me known, who being by me duly sworn, did depose and say: that he resides in the County of New York, State of New York; that he is President of **PLATTE RIVER INSURANCE COMPANY**, the corporation described in and which executed the above instrument; that he knows the seal of the said corporation; that the seal affixed to said instrument is such corporate seal; that it was so affixed by order of the Board of Directors of said corporation and that he signed his name thereto by like order.

DAVID J. REGELE
NOTARY PUBLIC
STATE OF WISCONSIN

David J. Regele
Notary Public, Dane Co., WI
My Commission Is Permanent

STATE OF WISCONSIN
COUNTY OF DANE } S.S.:

I, the undersigned, duly elected to the office stated below, now the incumbent in **PLATTE RIVER INSURANCE COMPANY**, a Nebraska Corporation, authorized to make this certificate, **DO HEREBY CERTIFY** that the foregoing attached Power of Attorney remains in full force and has not been revoked; and furthermore, that the Resolution of the Board of Directors, set forth in the Power of Attorney is now in force.

Signed and sealed at the City of Middleton, State of Wisconsin this 11 day of January, 20 19

SEAL

Antonio Celii
General Counsel, Vice President & Secretary

THIS DOCUMENT IS NOT VALID UNLESS PRINTED ON GREEN SHADED BACKGROUND WITH A RED SERIAL NUMBER IN THE UPPER RIGHT HAND CORNER. IF YOU HAVE ANY QUESTIONS CONCERNING THE AUTHENTICITY OF THIS DOCUMENT CALL 800-475-4450. PR-POA (Rev. 10-2017)

ACKNOWLEDGMENT

A notary public or other officer completing this certificate verifies only the identity of the individual who signed the document to which this certificate is attached, and not the truthfulness, accuracy, or validity of that document.

State of California
County of Sacramento)

On January 7, 2019 before me, Alison Rachele Chambers Stubbs, Notary Public
(Insert name and title of the officer)

personally appeared Lisa Betancur,
who proved to me on the basis of satisfactory evidence to be the person(~~s~~) whose name(~~s~~) is/~~are~~ subscribed to the within instrument and acknowledged to me that ~~he~~/she/~~they~~ executed the same in ~~his~~/her/~~their~~ authorized capacity(~~ies~~), and that by ~~his~~/her/~~their~~ signature(~~s~~) on the instrument the person(~~s~~), or the entity upon behalf of which the person(~~s~~) acted, executed the instrument.

I certify under PENALTY OF PERJURY under the laws of the State of California that the foregoing paragraph is true and correct.

WITNESS my hand and official seal.

Signature Alison Rachele Chambers Stubbs (Seal)

ALISON RACHELE CHAMBERS STUBBS
Notary Public - California
Sacramento County
Commission # 2253341
My Comm. Expires Aug 10, 2022

CERTIFICATE OF LIABILITY INSURANCE

DATE(MM/DD/YYYY) 10/04/2019

THIS CERTIFICATE IS ISSUED AS A MATTER OF INFORMATION ONLY AND CONFERS NO RIGHTS UPON THE CERTIFICATE HOLDER. THIS CERTIFICATE DOES NOT AFFIRMATIVELY OR NEGATIVELY AMEND, EXTEND OR ALTER THE COVERAGE AFFORDED BY THE POLICIES BELOW. THIS CERTIFICATE OF INSURANCE DOES NOT CONSTITUTE A CONTRACT BETWEEN THE ISSUING INSURER(S), AUTHORIZED REPRESENTATIVE OR PRODUCER, AND THE CERTIFICATE HOLDER.

IMPORTANT: If the certificate holder is an ADDITIONAL INSURED, the policy(ies) must have ADDITIONAL INSURED provisions or be endorsed. If SUBROGATION IS WAIVED, subject to the terms and conditions of the policy, certain policies may require an endorsement. A statement on this certificate does not confer rights to the certificate holder in lieu of such endorsement(s).

Holder Identifier :

PRODUCER
Aon Risk Services Southwest, Inc.
Houston TX Office
5555 San Felipe
Suite 1500
Houston TX 77056 USA

CONTACT NAME:
PHONE (A/C. No. Ext): (866) 283-7122 FAX (A/C. No.): (800) 363-0105
E-MAIL ADDRESS:

INSURER(S) AFFORDING COVERAGE		NAIC #
INSURER A:	ACE American Insurance Company	22667
INSURER B:	ACE Property & Casualty Insurance Co.	20699
INSURER C:		
INSURER D:		
INSURER E:		
INSURER F:		

INSURED
Finley-Buttes Limited Partnership
3 Waterway Square Place, Suite 110
The Woodlands TX 77380 USA

COVERAGES **CERTIFICATE NUMBER:** 570078735497 **REVISION NUMBER:**

THIS IS TO CERTIFY THAT THE POLICIES OF INSURANCE LISTED BELOW HAVE BEEN ISSUED TO THE INSURED NAMED ABOVE FOR THE POLICY PERIOD INDICATED. NOTWITHSTANDING ANY REQUIREMENT, TERM OR CONDITION OF ANY CONTRACT OR OTHER DOCUMENT WITH RESPECT TO WHICH THIS CERTIFICATE MAY BE ISSUED OR MAY PERTAIN, THE INSURANCE AFFORDED BY THE POLICIES DESCRIBED HEREIN IS SUBJECT TO ALL THE TERMS, EXCLUSIONS AND CONDITIONS OF SUCH POLICIES. LIMITS SHOWN MAY HAVE BEEN REDUCED BY PAID CLAIMS. **Limits shown are as requested**

INSR LTR	TYPE OF INSURANCE	ADDL INSD	SUBR WVD	POLICY NUMBER	POLICY EFF (MM/DD/YYYY)	POLICY EXP (MM/DD/YYYY)	LIMITS	
A	X COMMERCIAL GENERAL LIABILITY	Y		H0OG71571567	08/01/2019	08/01/2020	EACH OCCURRENCE	$2,000,000
	CLAIMS-MADE X OCCUR						DAMAGE TO RENTED PREMISES (Ea occurrence)	$100,000
							MED EXP (Any one person)	
							PERSONAL & ADV INJURY	$2,000,000
	GEN'L AGGREGATE LIMIT APPLIES PER:						GENERAL AGGREGATE	$5,000,000
	X POLICY PRO-JECT LOC						PRODUCTS - COMP/OP AGG	$2,000,000
	OTHER:							
A	AUTOMOBILE LIABILITY			ISA H25301031	08/01/2019	08/01/2020	COMBINED SINGLE LIMIT (Ea accident)	$5,000,000
	X ANY AUTO						BODILY INJURY (Per person)	
	OWNED AUTOS ONLY / SCHEDULED AUTOS						BODILY INJURY (Per accident)	
	HIRED AUTOS ONLY / NON-OWNED AUTOS ONLY						PROPERTY DAMAGE (Per accident)	
B	X UMBRELLA LIAB X OCCUR			X0OG27614620005	08/01/2019	08/01/2020	EACH OCCURRENCE	$1,000,000
	EXCESS LIAB CLAIMS-MADE			SIR applies per policy terms & conditions			AGGREGATE	$1,000,000
	DED X RETENTION							
	WORKERS COMPENSATION AND EMPLOYERS' LIABILITY						PER STATUTE / OTH-ER	
	ANY PROPRIETOR / PARTNER / EXECUTIVE OFFICER/MEMBER EXCLUDED? Y / N (Mandatory in NH) N / A						E.L. EACH ACCIDENT	
	If yes, describe under DESCRIPTION OF OPERATIONS below						E.L. DISEASE-EA EMPLOYEE	
							E.L. DISEASE-POLICY LIMIT	

DESCRIPTION OF OPERATIONS / LOCATIONS / VEHICLES (ACORD 101, Additional Remarks Schedule, may be attached if more space is required)
City of Moscow is included as Additional Insured in accordance with the policy provisions of the General Liability policy.

Certificate No : 570078735497

CERTIFICATE HOLDER

City of Moscow
Attn: Gary Riedner
122 East 4th Street
Moscow ID 83843 USA

CANCELLATION

SHOULD ANY OF THE ABOVE DESCRIBED POLICIES BE CANCELLED BEFORE THE EXPIRATION DATE THEREOF, NOTICE WILL BE DELIVERED IN ACCORDANCE WITH THE POLICY PROVISIONS.

AUTHORIZED REPRESENTATIVE

Aon Risk Services Southwest, Inc.

©1988-2015 ACORD CORPORATION. All rights reserved.

ACORD 25 (2016/03) The ACORD name and logo are registered marks of ACORD

UNANIMOUS WRITTEN CONSENT
OF THE GENERAL PARTNER OF
FINLEY-BUTTES LIMITED PARTNERSHIP

The undersigned, being the general partner of Finley-Buttes Limited Partnership, an Oregon limited partnership (the "Company"), hereby consents to the following actions and adopts the following resolution:

> BE IT RESOLVED that Brian Evola, District Manager of the Company, be, and he hereby is, authorized to execute by and on behalf of the Company any and all agreements, instruments, certifications, documents, or papers, as he may deem reasonably appropriate or necessary, pertaining to the Agreement for Solid Waste Transportation and Disposal Between the City of Moscow, Idaho and Finley-Buttes Limited Partnership and any extension thereto, and that any such action taken to date involving the above is hereby ratified and approved..

IN WITNESS WHEREOF, the undersigned general partner of Finley-Buttes Limited Partnership has duly executed this Written Consent in The Woodlands, Texas on the date set forth below.

Dated: October 16, 2019 **GENERAL PARTNER**

MANAGEMENT ENVIRONMENTAL NATIONAL, INC.
a Washington corporation

Name: Worthing F. Jackman
Its: Sole Director

{00088402.DOC.}

FUEL CALCULATIONS

BFI Adjustment

	CPI INDEX	Annual Adjustment	40 Percent	BFI
FY2020	251.107	0.0244	0.0098	3.27
FY2021	255.657	0.0181	0.0072	3.27
FY2022	258.811	0.0123	0.0049	3.29
FY2023	270.970	0.0469	0.0188	3.31

T = 416
Q = 92.44 4.5 mpg

Fuel Price Adjustment

2022	CFI	1.15% ABFI	0.85% ABFI	Q Gallons	T Trips
Jan	4.06	3.80	2.81	92.44	55
Feb	4.27	3.80	2.81	92.44	54
Mar	5.28	3.80	2.81	92.44	66
Apr	5.29	3.80	2.81	92.44	64
May	5.62	3.80	2.81	92.44	68
Jun	6.08	3.80	2.81	92.44	73
Jul	5.84	3.80	2.81	92.44	65
Aug	5.24	3.80	2.81	92.44	77
Sep	5.18	3.80	2.81	92.44	72
Oct	5.41	3.88	2.87	92.44	

ABFI
3.27
3.29
3.31
3.37

Monthly Adjustment
$ 1,311.52
$ 2,335.95
$ 9,017.10
$ 8,803.01
$ 11,427.56
$ 15,371.95
$ 12,245.29
$ 10,235.23
$ 9,171.27

COMMITTEE STAFF REPORT

DATE: Monday, November 28, 2022

RESPONSIBLE STAFF

Bob Buvel, Staff Engineer

ADDITIONAL PRESENTER(S)

OTHER RESOURCES

AGENDA ITEM TITLE

Almon Asbury Alley Paving Project Bid Award (ACTION ITEM) - Bob Buvel

DESCRIPTION

This project consists of the paving of the alley between Almon Street and Asbury Street from Sixth Street north to the existing pavement at Third Street. The project also includes the replacement of approximately 1200 linear feet of existing sanitary sewer main and installation of storm water collection and conveyance.

Bids were opened on Thursday, November 15, 2022. Three bids were received, ranging from $656,011.00 to $692,706.75. After reviewing the bids, Motley - Motley, Inc was found to be the lowest responsive bid with a bid total of $656,011.00. The engineer's estimate for the project was $536,910.00. The full bid tabulation is attached to the Committee packet.

STAFF RECOMMENDATION

Recommend acceptance of the low bid from Motley - Motley, Inc., award the contract for the bid amount of $656,011.00, and authorize staff approval of construction change orders in an amount not to exceed 10% of the contract amount.

PROPOSED ACTIONS

PROPOSED ACTIONS: Recommend acceptance of the low bid from Motley - Motley, Inc., award the contract for the bid amount of $656,011.00, and authorize staff approval of construction change orders in an amount not to exceed 10% of the contract amount, or provide staff further direction.

FISCAL IMPACT

Funding for the project would be $449,427.50 from Sewer Capital Projects line item 330-330-60-770-45 Sewer Main Program, $202,886.70 from Streets Capital Projects Line Item 350-150-40-770-80 Roadway Program and $3,693.80 from private development security holdings. The total expenditure would be $656,011.00 plus an additional 10% allocated for possible change orders to fund contract with Motley - Motley, Inc for the construction of the project.

PERSONNEL IMPACT

City staff will administer the construction contract and inspection.

ATTACHMENTS

1. Almon Asbury Alley Paving Project Construction Agreement_final with attachemnts
2. Almon Asbury Alley Paving Project Tabulation

CONSTRUCTION AGREEMENT
FOR ALMON ASBURY ALLEY PAVING PROJECT
BETWEEN CITY OF MOSCOW, IDAHO
AND MOTLEY-MOTLEY, INC.

THIS CONSTRUCTION AGREEMENT FOR ALMON ASBURY ALLEY PAVING PROJECT BETWEEN CITY OF MOSCOW, IDAHO, AND MOTLEY-MOTLEY (hereinafter "Agreement"), dated this ____ day of _____, 2022, by and between City of Moscow, Idaho, a municipal corporation of the State of Idaho, 206 East Third Street, Moscow, Idaho, 83843 (hereinafter "CITY"), and Motley-Motley, Inc., 6901 State Route 270, Pullman, WA, 99163 (hereinafter "CONTRACTOR"):

W I T N E S S E T H:

WHEREAS, pursuant to the invitation of CITY, extended through an "Invitation to Bid" see Attachment 'A', CONTRACTOR submitted a Bid Proposal containing an offer invited by said invitation; and

WHEREAS, CITY has determined that said offer was the lowest responsive Bid Proposal; and

WHEREAS, CITY has accepted CONTRACTOR's Bid Proposal;

NOW THEREFORE, the Parties to this Agreement, in consideration of the mutual covenants and stipulations set out, agree as follows:

ARTICLE 1.
CONTRACT DOCUMENTS

The Contract Documents which comprise the entire Agreement between CITY and CONTRACTOR concerning the work to be performed, are this Agreement, pages one (1) through seven (7), and the following:

1. Drawings, Specifications and Proposal, Attachment 'A' for: Almon Asbury Paving Project**,** consisting of 117 pages; and
2. Bid Proposal of CONTRACTOR, dated November 15, 2022, see Attachment 'B', consisting of 7 pages; and
3. Performance and Payment Bonds and Insurance Certificates; and
4. Addenda, if applicable, Attachment 'C', consisting of 4 pages; and
5. Change Orders, which may be delivered or issued after the effective date of this Agreement.

There are no Contract Documents other than those listed in Article 1. This Agreement may only be amended by change order as provided in the General Conditions of Attachment 'A'.

ARTICLE 2.
WORK

CONTRACTOR shall complete the entire work as specified, indicated and required under the Contract Documents, contained herein under Article 1. for CITY project (hereinafter "Project") titled:

Almon Asbury Alley Paving Project

ARTICLE 3.
CONTRACT TIME/SUBSTANTIAL COMPLETION

The work to be performed pursuant to this Agreement shall be substantially completed on or before August 4th, 2023, unless adjustment of the Agreement time is made in accordance with the provisions of the Contract Documents. CONTRACTOR shall begin work in conformance with the Contract Documents.

CONTRACTOR and CITY recognize that time is of the essence and that CITY will suffer financial loss if the Project is not completed within the time specified above, unless approved extensions thereof are permitted in accordance with Article 12 of the General Conditions. The Parties also recognize the delays, expense, and difficulties involved in proving, in a legal or arbitration proceeding, the actual loss suffered by CITY if the Project is not completed on time. Accordingly, instead of requiring any such proof, CITY and CONTRACTOR agree that as liquidated damages for delay (but not as a penalty), CONTRACTOR shall pay CITY One Half of One Percent (0.5%) of the Contract Sum for each day that expires after the time specified above for Substantial Completion until the Project is substantially complete. After Substantial Completion, if CONTRACTOR shall neglect, refuse, or fail to complete the remaining Project within the Time of Completion or by any proper extension thereof granted by CITY, CONTRACTOR shall pay CITY One Half of One Percent (0.5%) of the Contract Sum for each day that expires after the time specified above for completion, until the Project is completed and ready for final payment.

ARTICLE 4.
CONTRACT SUM

CITY shall pay CONTRACTOR for completion of the Work in accordance with the Contract Documents in current funds in the amount of Six Hundred Fifty-Six Thousand Eleven dollars ($656,011.00), as submitted by CONTRACTOR. In no event shall Contract amount exceed CONTRACTOR's bid amount of Six Hundred Fifty-Six Thousand Eleven dollars ($656,011.00), unless otherwise authorized by CITY by written agreement. Said Contract Sum shall be paid in accordance with the Contract Documents.

ARTICLE 5.
INDEPENDENT CONTRACTOR

The Parties warrant by their signatures that no employer-employee relationship is established between CONTRACTOR and CITY by the terms of this Agreement. It is understood by the Parties hereto that CONTRACTOR is an independent contractor and, as such, neither CONTRACTOR

nor CONTRACTOR's employees, agents, representatives or subcontractors, if any, are employees of CITY for purposes of tax, retirement system, or social security (FICA) withholding.

ARTICLE 6.
SCOPE OF SERVICES

CONTRACTOR shall perform all work required by the Contract Documents. All work shall be completed in accordance with the specifications and plans established for this Project.

ARTICLE 7.
HOLD HARMLESS/INDEMNIFICATION

In addition to other rights granted CITY by the Contract Documents, CONTRACTOR agrees to indemnify, defend, and hold harmless CITY, its officers, agents, employees, and engineers, from and against any and all losses, lawsuits, actions, claims, judgements for damages, or any injuries or damages received or sustained by any person, persons, or property, and losses, expenses, and other costs, including litigation costs and attorney's fees, arising out of, resulting from, or in connection with the acts and/or any performances, activities, errors or omissions by CONTRACTOR, CONTRACTOR's servants, agents, officers, employees, representatives, guests, business invitees or its subcontractors; or on account of or in consequence of any neglect in safeguarding the work; or through use of unacceptable materials in constructing the work; or because of any claims or amounts recovered from any infringements of patent, trademark or copyright; or from any claims or amounts arising out of or recovered under the Workmen's Compensation Act or any other law, ordinance, order, or decree.

ARTICLE 8.
CONFLICT OF INTEREST

CONTRACTOR covenants that it presently has no interest and will not acquire any interest, direct or indirect, in the Project, which would conflict in any manner or degree with the performance of CONTRACTOR's services hereunder. CONTRACTOR further covenants that, in performing this Agreement, CONTRACTOR will employ no person who has any such interest. Should any conflict of interest arise during the performance of this Agreement, CONTRACTOR shall immediately disclose such conflict to the CITY.

ARTICLE 9.
ENTIRE AGREEMENT, MODIFICATION AND ASSIGNABILITY

This Agreement and the exhibits hereto contain the entire Agreement between the Parties, and no statements, promises, or inducements made by either Party, or agents of either Party are valid or binding unless contained herein. This Agreement may not be enlarged, modified or altered except upon written agreement signed by the Parties hereto. CONTRACTOR may not subcontract or assign its rights (including the right to compensation) or duties arising hereunder, other than as provided within the Contract Documents, without the prior written consent and express authorization of CITY.

ARTICLE 10.
LICENSES AND ADHERENCE TO LAW REQUIRED

CONTRACTOR represents that he possesses the skill and experience necessary and all licenses required to perform the services under this Agreement. CONTRACTOR further agrees to comply with all applicable Federal, State and Local statutes and regulations in the performance of the services hereunder, and are hereby made a part of this Agreement and shall be adhered to at all times. Violation of any of these statutes or regulations by CONTRACTOR shall be deemed material and shall subject CONTRACTOR to termination of this Agreement for cause. No pleas of misunderstanding or ignorance on the part of CONTRACTOR will, in any way, serve to modify the provisions of this requirement. CONTRACTOR and its surety shall indemnify, defend and hold harmless CITY and its employees, agents, engineers and representatives against any claim or liability arising from or based on the violation of any such laws, codes, ordinances, or regulations, whether by CONTRACTOR, CONTRACTOR's employees, or its subcontractors.

Anti-Boycott Against Israel Act. CONTRACTOR certifies it is not currently engaged in, and will not for the duration of the Agreement engage in, a boycott of goods and services from Israel or territories under its control. Failure to comply with I.C. 67-2346 will result in this Agreement being void as against public policy.

ARTICLE 11.
EMPLOYMENT DISCRIMINATION

It is illegal under the U.S. Federal law to discriminate against an employee, either intentionally or through disparate impact, on account of race, color, gender, religion, sex (including pregnancy), national origin, physical or mental disability, age, marital or familial status, sexual orientation, and gender expression or identity. CONTRACTOR shall not discriminate against any employee or applicant for employment. CONTRACTOR's action under this Section shall include, but not be limited to, the following: employment, upgrading, demotion or transfer, recruitment or recruitment advertising, layoff or termination, rates of pay or other forms of compensation and selection for training, including apprenticeship. CONTRACTOR agrees to post in conspicuous places, available to employees and other applicants for employment, notices setting forth the provisions of this non-discrimination Section.

ARTICLE 12.
LEGAL FEES

In the event either Party incurs legal expenses to enforce the terms and conditions of this Agreement, the prevailing Party is entitled to recover attorney's fees and other costs and expenses, whether the same are incurred with or without a lawsuit.

ARTICLE 13.
JURISDICTION, VENUE AND NONWAIVER

It is agreed that this Agreement shall be construed under and governed by the laws of the State of Idaho. In the event of litigation concerning it, it is agreed that proper venue shall be the District Court of the Second Judicial District of the State of Idaho, in and for the County of Latah. Failure

of CITY to exercise any of the rights under this Agreement, or breach thereof, shall not be deemed to be a waiver of such right or a waiver of any subsequent breach.

ARTICLE 14.
SPECIAL WARRANTY

CONTRACTOR warrants that nothing of monetary value has been given, promised or implied as remuneration or inducement to enter into this Agreement. CONTRACTOR declares that no improper personal, political or social activities have been used or attempted in an effort to influence the outcome of the competition, discussion, or negotiation leading to the award of this Agreement. Any such activity by CONTRACTOR shall make this Agreement null and void. CONTRACTOR further warrants that all materials and goods supplied under this Agreement shall be of good merchantable quality and that all services will be performed in a good workmanlike manner. CONTRACTOR acknowledges that it will be liable for any breach of this warranty.

ARTICLE 15.
COMMUNICATIONS

Such communications as are required by this Agreement shall be satisfied by mailing or by personal delivery to the Parties at the following address:

CONTRACTOR:

Motley-Motley, Inc
Frank J. Motley
6901 SR 270
Pullman, WA 99163

CITY:

City of Moscow
Engineering Division
206 East Third Street
P O Box 9203
Moscow, Idaho 83843

ARTICLE 16.
NON-APPROPRIATIONS

This Agreement is contingent upon CITY receiving the necessary funding to cover the obligations of CITY. In the event that such funding is not received or appropriated, then, and in that event, CITY's obligations under this Agreement shall cease and each Party shall be released from further performance under this Agreement without any liability to the other Party, and CONTRACTOR shall be entitled to receive just and equitable compensation for any work satisfactorily completed hereunder.

ARTICLE 17.
APPROVAL REQUIRED AND SEVERABILITY

This Agreement shall not become effective or binding until approved by CITY. If any part of this Agreement is held unenforceable, the remaining portions of the Agreement will, nevertheless, remain in full force and effect.

ARTICLE 18.
EXECUTION

IN WITNESS WHEREOF, said CONTRACTOR and CITY have caused this Agreement to be executed on the day and year first above written.

I Frank J. Motley, certify under penalty of perjury pursuant to the law of the State of Idaho, that I am an authorized agent to bind Motley-Motley, Inc. to this Agreement.

CONTRACTOR:

Motley-Motley, Inc.

_____

By: Frank J. Motley

CITY:

City of Moscow, Idaho

_____

Arthur D. Bettge, Mayor

ATTEST:

_____

Laurie M. Hopkins, City Clerk

Approved as to Form:

_____

Mia Bautista, City Attorney

ACKNOWLEDGMENT

STATE OF _____)
) ss.
COUNTY OF _____)

On this _____ day of _____, 2022, before me, a Notary Public in and for said State, appeared Frank J. Motley, known to me to be the person named above and acknowledged that they executed the foregoing document as the duly authorized representative for Motley-Motley, Inc..

_____
Notary Public for the State of _____
Residing at_____
My commission expires_____

COMMUNITY PLANNING & DESIGN

ENGINEERING DIVISION

DRAWINGS, SPECIFICATIONS AND
PROPOSAL FOR:

ALMON ASBURY ALLEY PAVING PROJECT

CITY OF MOSCOW PROJECT NO. 104-020

{This Page Was Intentionally Left Blank}

CITY OF MOSCOW, IDAHO

Community Planning & Design
Engineering Division
504 South Washington Street
(208) 883-7034

Plans, Specifications and Proposal

For

ALMON ASBURY ALLEY PAVING PROJECT
CITY OF MOSCOW PROJECT NO. 104-020

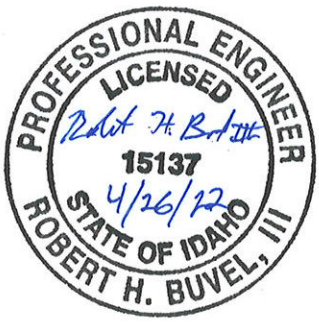

STAFF ENGINEER:
BOB BUVEL

Contents

INVITATION TO BID **1**
CONSTRUCTION AGREEMENT **6**
INSTRUCTION TO BIDDERS **12**
IB-1. INTENT OF PLANS AND SPECIFICATIONS 12
IB-2. PLANS, SPECIFICATIONS, AND ADDITIONAL INFORMATION 12
IB-3. EXAMINATION OF PLANS, SPECIFICATIONS, AND SITE 12
IB-4. PREPARATION AND DELIVERY OF PROPOSAL 12
IB-5. PROPOSAL GUARANTY 12
IB-6. RETURN OF PROPOSAL GUARANTY 13
IB-7. QUALIFICATIONS OF BIDDER 13
IB-8. AWARD OF CONTRACT 13
IB-9. FAILURE TO EXECUTE CONTRACT 14
IB-10. NONDISCRIMINATION IN EMPLOYMENT 14
IB-11. WAGE RATES 14
IB-12. CONTRACTOR FOR PUBLIC WORKS TO PAY OR SECURE TAXES AGREEMENT 14
IB-13. PERFORMANCE PERIOD 15
IB-14. CONSIDERATION OF MULTIPLE DIVISIONS OF WORK 15
IB-15. ALTERNATES 15
IB-16. SUBCONTRACTORS TO BE LISTED ON BID 15
GENERAL CONDITIONS **17**
GC-1. COMPLIANCE 17
GC-2. DEFINITIONS 17
GC-3. PLANS AND SPECIFICATIONS AND ADDITIONAL DRAWINGS 18
GC-4. ALTERATION OR MODIFICATION OF CONTRACT DOCUMENTS 18
GC-5. INVESTIGATION BY BIDDERS 19
GC-6. NON-DISCRIMINATION 19
GC-7. INTERPRETATION OF THE SPECIFICATIONS 19
GC-8. CONTRACTS 19
GC-9. QUANTITIES FURNISHED BIDDERS 22
GC-10. MAJOR CHANGES 23
GC-11. EXTRA WORK 24
GC-12. MONTHLY PAYMENTS 24
GC-13. TIME OF COMPLETION/LIQUIDATED DAMAGES 25
GC-14. ABANDONMENT OF WORK 27
GC-15. AUTHORITY OF ENGINEER 27
GC-16. PERFORMANCE AND PAYMENT BONDS 28
GC-17. INSURANCE/CITY TO BE NAMED AS ADDITIONAL INSURED 28
GC-18. PATENT ROYALTIES AND PROCESS FEES 29
GC-19. CONTRACTOR RESPONSIBLE FOR WORK 30
GC-20. USE OF COMPLETED PORTION 30
GC-21. SIGNATURES 30
GC-22. ORDERS TO BEGIN WORK 31
GC-23. ORDER OF WORK 31
GC-24. EFFICIENCY OF OPERATION/LICENSING 31
GC-25. PROTECTION OF WORK AND PROPERTY 31
GC-26. RESPONSIBILITY FOR SAFETY 32
GC-27. GUARDS AND BARRICADES 32
GC-28. EXISTING TRAFFIC SIGNS AND FACILITIES 32
GC-29. MAINTAINING POSTAL SERVICE 33
GC-30. EMERGENCY WORK 33
GC-31. SUPERVISION OF WORK 33
GC-32. CORRECTION AND COMPLETION OF WORK 33

GC-33. SUBSTITUTES CLAUSE 34
GC-34. DETAILED BREAKDOWN OF CONTRACT PRICE 35
GC-35. CONTRACTOR'S RESPONSIBILITY FOR UTILITY PROPERTIES AND SERVICE. 35
GC-36. STREET CLEANUP DURING CONSTRUCTION 36
GC-37. CLEANUP 36
GC-38. PROOF OF TAX PAYMENT 36
GC-39. HOLD HARMLESS REQUIREMENT 36
GC-40. JURISDICTION AND DISPUTE RESOLUTION 36
GC-41. PERMITS AND LICENSES 37
GC-42. ENVIRONMENTAL MATTERS 37
GC-43. NO THIRD PARTY BENEFICIARIES 37
GC-44. COMPLIANCE WITH GRANT CONDITIONS 37
ENGINEERING SPECIFICATIONS 39
ES-1. SCOPE OF WORK 39
ES-2. TRAFFIC CONTROL/R.O.W USE PERMITS 39
ES-3. MATERIALS 40
ES-4. REMOVALS AND DISPOSALS 41
ES-5. EARTHWORK 41
ES-6. SUBGRADE SEPARATION GEOTEXTILES 43
ES-7. CRUSHED ROCK BASE 43
ES-8. SOFT SPOT REPAIR 46
ES-9. WATERING 46
ES-10. WEIGHING 47
ES-11. CONCRETE 47
ES-12. CONCRETE CONSTRUCTION REQUIREMENTS 49
ES-13. CONCRETE CURB 52
ES-14. CONCRETE SIDEWALK 54
ES-15. SUPERPAVE HOT MIX ASPHALT 56
ES-16. ADJUSTMENT OF GATE VALVE BOXES, MONUMENTS, CATCH BASINS, CATCH INLETS, AND MANHOLES 58
ES-17. MANHOLES AND CATCH BASINS 59
ES-19. TRENCH EXCAVATION AND BACKFILL 63
ES-20. PIPE 69
ES-21 GATE VALVES AND VALVE BOXES 76
ES-22. STORM AND SANITARY CONNECTIONS 78
ES-23. STREET / ALLEY CUT REPAIR 79
ES-24. EROSION AND SEDIMENT CONTROL 79
ES-25. STORMWATER RUNOFF CONTROL 79
ES-26. IMPORTED TOPSOIL 80
ES-27. INSPECTION 80
ES-28. WORKMANSHIP AND CLEAN UP 81
ES-29. MOBILIZATION 81
SPECIAL PROVISIONS 83
INSPECTION 84
ORDER OF WORK 84
ABANDONING & REMOVAL OF EXISTING WATER MAINS 85
MISC REMOVALS 85
TREE ROOTS 85
ENVIRONMENTAL PROTECTION 85
SP-1.1 REMOVE & DISPOSE OF BITUMINOUS SURFACE 85
SP-1.2 REMOVE & DISPOSE OF CONCRETE DRIVEWAY APPROACH 86
SP-1.3 REMOVE & DISPOSE OF MANHOLE 86
SP-1.4 EXCAVATION (PLAN QUANTITY) 87
SP-2.1 SANITARY SEWER MANHOLE (4' DIAMETER) 87

SP-2.2 **8-INCH PVC SANITARY SEWER PIPE (CLASS D BACKFILL)** 88
SP-2.3 **EXISTING SANITARY SERVICE CONNECTION** 88
SP-2.4 **SANITARY SEWER BYPASS** 89
SP-3.1 **CATCH BASIN** 89
SP-3.2 **8-INCH STORM SEWER PIPE (CLASS D BACKFILL)** 89
SP-4.1 **REINFORCED DRIVEWAY APPROACH** 90
SP-5.1 **1/2" SUPERPAVE HMA PAVEMENT** 91
SP-5.2 **3/4" CRUSHED ROCK BASE** 92
SP-5.3 **1-1/4" CRUSHED ROCK BASE** 92
SP-5.4 **SUBGRADE SEPARATION GEOTEXTILE** 92
SP-5.5 **SOFT SPOT REPAIR** 93
SP-6.1 **INLET PROTECTION** 94
SP-6.2 **STABILIZED CONSTRUCTION ENTRANCE** 95
SP-7.1 **TRAFFIC CONTROL** 95
SP-8.1 **MOBILIZATION** 96
APPENDIX I 98

INVITATION TO BID

The City of Moscow, Idaho is accepting sealed bids to be submitted to the business office of The Community Planning & Design Engineering Division at 504 South Washington Street, Moscow, Idaho 83843, and clearly marked "**Bid Enclosed – Almon Asbury Alley Paving Project**" until **2:00 p.m**., prevailing local time, **Tuesday, May 17, 2022**, for the following project:

ALMON ASBURY ALLEY PAVING PROJECT

At **2:05 p.m., on the same day**, all proposals will be publicly opened and read aloud in the Second Floor Conference Room, on the second floor of the Haddock Building, 504 South Washington Street, Moscow, ID 83843.

The project's base bid consists of the paving of the alley between Almon Street and Asbury Street from Sixth Street north to the existing pavement at Third Street. The project also includes the replacement of approximately 1200 linear feet of existing sanitary sewer main and installation of storm water collection and conveyance.

Complete digital Project Manual and Project Plans, may viewed at questcdn.com via the link provided on The City of Moscow Website at: www.ci.moscow.id.us – click on "Business" / "Bid Opportunities" / "Almon Asbury Alley Paving Project"

Once on the Quest site, you may download the digital plan documents for a **non-refundable fee of $20.00.** The Quest project number is **8191073**. Please contact QuestCDN.com at 952-233-1632 or info@questcdn.com for assistance in free membership registration, downloading, and working with digital project information.

IMPORTANT - All communication about this project, including addenda **will only be issued** via QuestCDN, and **only to those firms listed on the Plan Holder's List.**

The Project Documents may also be examined at the City of Moscow Haddock Building (Engineering Division), 504 South Washington Street, Moscow, ID 83843.

Questions should be directed to Bob Buvel, P.E., City of Moscow Engineering Division, 504 South Washington Street, Moscow, ID. Phone 208-883-7031 or Email: bbuvel@ci.moscow.id.us

Any objections to the contents or terms of the documents shall be raised three (3) business days prior to bid opening or it shall be deemed to have been waived.

The City reserves the right to reject any and all Bid Proposals, to waive any formality in the Bidding Contract Documents and to make selection to the lowest responsive, responsible and qualified Bidder as it may best serve the interest of the Owner.

Tracy Ortiz, Deputy City Clerk

Publish Dates: April 30, 2022 & May 7, 2022

TO: Mayor and City Council
City of Moscow, Idaho

Date: _____

This proposal is submitted as an offer by the undersigned to enter into contract with the City of Moscow, Idaho as represented by the City Council, herein referred to as the 'CITY' for ALMON ASBURY ALLEY PAVING PROJECT, (hereinafter "Project") specified herein and which construction documents are on file with the City Division, Haddock Building, 504 South Washington Street, Moscow, Idaho, and which are a condition hereof with the same force and effect as though they were attached hereto. The offer is conditioned on the following declarations as to the facts, intention and understanding of the undersigned and the agreement of the CITY to the terms and prices herein submitted.

1. All Project specifications and drawings examined by the undersigned and their terms and conditions are hereby agreed to.

2. The undersigned certifies that he/she has received or made himself/herself aware of any and all existing site conditions that may affect the proposed work.

3. It is understood that the contract drawings may be supplemented by additional drawings and specifications in explanation and elaboration of the contract drawings and it is agreed that such supplemental drawings, when not in conflict with those referred to in paragraph 1 above, will have the same force and effect as if attached hereto and that when received they will be considered a part of the contract.

4. The undersigned will furnish separate performance and payment bonds in the full amount of the contract price.

5. The cash, certified check, bid bond, or cashier's check accompanying this proposal shall be forfeited to the City of Moscow to the extent of 5% of the amount bid if the undersigned shall fail or refuse to execute the contract, furnish performance and payment bonds, and insurance certificate as required by the specifications within the time limit therein after notification that the said proposal is accepted, all in accordance with the provisions of this proposal and the specifications.

6. The undersigned further agrees that the CITY shall have the right to accept or reject any bid item deemed to be in the best interest of the CITY.

7. The undersigned agrees to order all necessary equipment and materials within a period of three (3) days after Notice to Proceed has been issued by the City Engineer.

8. The undersigned, as a bidder, acknowledges that Addenda Number _____ through _____ have been delivered to him/her and have been examined as part of the contract documents.

9. The undersigned agrees to complete all work embraced in the contract within the time limitations set forth in paragraph IB-13 of the Instruction to Bidders.

10. The undersigned holds Idaho State Public Works Contractor's License Number_____.

11. The undersigned proposes to use the following subcontractors in the performance of meeting the contract requirements. Information herein must comply with Idaho Code Section 67-2310 and IB-16:

Subcontractors	Trade Specialty	Idaho Public Works License No.	$ Amount
a.			
b.			
c.			
d.			
e.			

12. The undersigned proposes to furnish labor, materials, equipment and services of all kinds required for ALMON ASBURY ALLEY PAVING PROJECT, as described in the specifications, including all appurtenant work, all as required by the specifications and this proposal for the prices in accordance with the completed schedule contract prices as followed in the Bid Schedules.

BASE BID SCHEDULE – Almon Asbury Alley Paving Project

Item		Base Bid			
Bid Item No.	Description	Item Quantity	Units	Unit Price	Total Value of Item ($)
1	***Earthwork***				
SP1.1	Remove and Dispose of Bituminous Surface	523	SY		
SP1.2	Remove and Dispose of Concrete Driveway Approach	21	SY		
SP1.3	Remove and Dispose of Manhole	3	EA		
SP1.4	Excavation (plan quantity)	260	CY		
2	***Sewer***				
SP2.1	Sanitary Sewer Manhole (4' Diameter)	3	EA		
SP2.2	8-Inch PVC Sanitary Sewer Pipe (Class D Backfill)	1237	LF		
SP2.3	Existing Sanitary Service Connection	39	EA		
SP2.4	Sanitary Sewer Bypass	1	LS		
3	***Storm***				
SP3.1	Catch Basin	2	EA		
SP3.2a	8-Inch Storm Sewer Pipe (Class D Backfill)	357	LF		
SP3.2b	8-Inch C900 Storm Sewer Pipe (Class D Backfill)	75	LF		
SP3.3	Existing Storm Service Connection	2	EA		
4	***Concrete***				
SP4.1	Reinforced Driveway Approach	21	SY		
5	***Roadway***				
SP5.1	1/2" Superpave HMA Pavement	310	TON		
SP5.2	3/4" Crushed Rock Base	465	TON		
SP5.3	1-1/4" Crushed Rock Base	50	TON		
SP5.4	Subgrade Separation Geotextile	1392	SY		
SP5.5	Soft Spot Repair	50	SY		
6	***BMPs***				
SP6.1	Inlet Protection	6	EA		
SP6.2	Stabilized Construction Entrance	3	EA		
7	***Traffic***				
SP7.1	Traffic Control	1	LS		
8	***MISC***				
SP8.1	Mobilization	1	LS		

Total Base Bid _____

Total (written in words):

Firm Name of Bidder

Signature of Bidder

Official Title

Bidders Mailing Address

Public Works License No.

State of Incorporation if Incorporated

SEAL (if incorporated)

Dated at _____

This _____ day of _____, 2022

(DRAFT – DO NOT SUBMIT WITH BID)

CONSTRUCTION AGREEMENT
FOR _____
BETWEEN CITY OF MOSCOW, IDAHO
AND _____

THIS CONSTRUCTION AGREEMENT FOR ALMON ASBURY ALLEY PAVING PROJECT BETWEEN CITY OF MOSCOW, IDAHO AND _____ (hereinafter "Agreement"), dated this _____ day of _____, 2022, by and between the City of Moscow, Idaho, a municipal corporation of the State of Idaho, 504 South Washington Street, Moscow, Idaho, 83843 (hereinafter "CITY"), and _____(hereinafter "CONTRACTOR");

W I T N E S S E T H :

WHEREAS, pursuant to the invitation of CITY, extended through an "Invitation to Bid" and amended through "Addendum No. 1", CONTRACTOR submitted a Bid Proposal containing an offer invited by said solicitation; and

WHEREAS, CITY has determined that said offer was the lowest responsive Bid Proposal; and

WHEREAS, CITY has accepted CONTRACTOR's Bid Proposal;

NOW THEREFORE, the Parties to this Agreement, in consideration of the mutual covenants and stipulations set out, agree as follows:

ARTICLE 1.
CONTRACT DOCUMENTS

The Contract Documents which comprise the entire Agreement between CITY and CONTRACTOR concerning the work to be performed, are this Agreement, pages one (1) through six (6), and the following:

1. Drawings, Specifications and Proposal, Attachment 'A' for: _____ Project No. _____;
2. Addenda issued prior to the opening of bids, see Attachment 'B';
3. Bid Proposal of CONTRACTOR, dated _____, see Attachment 'C';
4. Performance and Payment Bonds, and Insurance Certificates, physically attached to this Agreement; and
5. Change Orders which may be delivered or issued after the effective date of this Agreement.

There are no Contract Documents other than those listed in Article 1. This Agreement may only be amended by change order as provided in the Project Specifications.

ARTICLE 2.
WORK

CONTRACTOR shall complete the entire Work as specified, indicated, and required under the Contract Documents contained herein under Article 1., for CITY project (hereinafter "Project") titled:

"_____"

ARTICLE 3.
CONTRACT TIME/SUBSTANTIAL COMPLETION

The work to be performed pursuant to this Agreement shall not begin prior to _____, 2022 and shall be substantially completed on or before _____, 2022. Work shall be substantially completed within thirty (30) calendar days of commencement of work, unless adjustment of the substantial completion time is made in accordance with the provisions of the Contract Documents.

CONTRACTOR and CITY recognize that time is of the essence and that CITY will suffer financial loss if the Project is not completed within the time specified above, unless approved extensions thereof are permitted in accordance with Article 12 of the General Conditions. The Parties also recognize the delays, expense, and difficulties involved in proving, in a legal or arbitration proceeding, the actual loss suffered by CITY if the Project is not completed on time. Accordingly, instead of requiring any such proof, CITY and CONTRACTOR agree that as liquidated damages for delay (but not as a penalty), CONTRACTOR shall pay CITY One Half of One Percent (0.5%) of the Contract Sum for each day that expires after the time specified above for Substantial Completion until the Project is substantially complete. After Substantial Completion, if CONTRACTOR shall neglect, refuse, or fail to complete the remaining Project within the Time of Completion or by any proper extension thereof granted by CITY, CONTRACTOR shall pay CITY One Half of One Percent (0.5%) of the Contract Sum for each day that expires after the time specified above for completion, until the Project is completed and ready for final payment.

ARTICLE 4.
CONTRACT SUM

CITY shall pay CONTRACTOR for completion of the Project in accordance with the Contract Documents in current funds in the amount of _____, as submitted by CONTRACTOR. In no event shall Contract amount exceed CONTRACTOR's bid amount of _____ _____, unless otherwise authorized by CITY in writing. Any work additional to the current Agreement shall be compensated in accordance with pricing terms specified in the Bid Proposal, and shall be agreed to by the Parties in writing. Said Contract Sum shall be paid in accordance with the Contract Documents.

ARTICLE 5.
INDEPENDENT CONTRACTOR

The Parties warrant by their signature that no employer-employee relationship is established between CONTRACTOR and CITY by the terms of this Agreement. It is understood by the Parties hereto that CONTRACTOR is an independent contractor and, as such, neither CONTRACTOR nor CONTRACTOR's employees, agents, representatives or Subcontractors, if any, are employees of CITY for purposes of tax, retirement system, or social security (FICA) withholding.

ARTICLE 6.

SCOPE OF SERVICES

CONTRACTOR shall perform all Work required by the Contract Documents. All Work shall be completed in accordance with the specifications and plans established for this Project.

ARTICLE 7.
HOLD HARMLESS/INDEMNIFICATION

In addition to other rights granted CITY by the Contract Documents, CONTRACTOR agrees to indemnify, defend, and hold harmless CITY, its officers, agents, employees, and engineers, from and against any and all losses, lawsuits, actions, claims, judgements for damages, or any injuries or damages received or sustained by any person, persons, or property and losses, and expenses, and other costs, including litigation costs and attorney's fees, arising out of, resulting from, or in connection with the acts and/or any performances, activities, errors or omissions by CONTRACTOR, CONTRACTOR's servants, agents, officers, employees, representatives, guests, business invitees or its Subcontractors; or on account of or in consequence of any neglect in safeguarding the Project; or through use of unacceptable materials in constructing the Project; or because of any claims or amounts recovered from any infringements of patent, trademark or copyright; or from any claims or amounts arising out of or recovered under the Workmen's Compensation Act or any other law, ordinance, order, or decree.

ARTICLE 8.
CONFLICT OF INTEREST

CONTRACTOR covenants that it presently has no interest and will not acquire any interest, direct or indirect, in the Project which would conflict in any manner or degree with the performance of CONTRACTOR's services hereunder. CONTRACTOR further covenants that, in performing this Agreement, CONTRACTOR will employ no person who has any such interest. Should any conflict of interest arise during the performance of this Agreement, CONTRACTOR shall immediately disclose such conflict to the Engineer and CITY.

ARTICLE 9.
ENTIRE AGREEMENT, MODIFICATION AND ASSIGNABILITY

This Agreement and the exhibits hereto contain the entire Agreement between the Parties, and no statements, promises, or inducements made by either Party, or agents of either Party are valid or binding unless contained herein. This Agreement may not be enlarged, modified or altered except upon written agreement signed by the Parties hereto. CONTRACTOR may not subcontract or assign its rights (including the right to compensation) or duties arising hereunder, other than as provided within the Contract Documents, without the prior written consent and express authorization of CITY.

ARTICLE 10.
LICENSES AND ADHERENCE TO LAW REQUIRED

CONTRACTOR represents that it possesses the skill and experience necessary and all licenses required to perform the Work under this Agreement. CONTRACTOR further agrees to comply with all applicable Federal, State and Local Statutes and Regulations in the performance of the Work hereunder, and are hereby made a part of this Agreement and shall be adhered to at all times. Violation of any of these statutes or regulations by CONTRACTOR shall be deemed material and shall subject CONTRACTOR to termination of this Agreement for cause. No pleas of misunderstanding or ignorance on the part of CONTRACTOR will in any way serve to modify the provisions of this requirement. CONTRACTOR and its surety shall indemnify, defend and hold harmless CITY and its employees, agents, engineers and

representatives, against any claim or liability arising from or based on the violation of any such laws, codes, ordinances, or regulations, whether by CONTRACTOR, CONTRACTOR's employees, or its Subcontractors.

ARTICLE 11.
EMPLOYMENT DISCRIMINATION

It is illegal under the U.S. Federal law to discriminate against an employee, either intentionally or through disparate impact, on account of race, color, gender, religion, sex (including pregnancy), national origin, physical or mental disability, age, marital or familial status, sexual orientation, and gender expression or identity. CONTRACTOR shall not discriminate against any employee or applicant for employment. CONTRACTOR's action under this Section shall include, but not be limited to, the following: employment, upgrading, demotion or transfer, recruitment or recruitment advertising, layoff or termination, rates of pay or other forms of compensation and selection for training, including apprenticeship. CONTRACTOR agrees to post in conspicuous places, available to employees and other applicants for employment, notices setting forth the provisions of this non-discrimination Section.

ARTICLE 12.
LEGAL FEES

In the event either Party incurs legal expenses to enforce the terms and conditions of this Agreement, the prevailing Party is entitled to recover attorney's fees and other costs and expenses, whether the same are incurred with or without a lawsuit.

ARTICLE 13.
JURISDICTION, VENUE AND NONWAIVER

It is agreed that this Agreement shall be construed under and governed by the laws of the State of Idaho. In the event of litigation concerning it, it is agreed that proper venue shall be the District Court of the Second Judicial District of the State of Idaho, in and for the County of Latah. Failure of CITY to exercise any of the rights under this Agreement, or breach thereof, shall not be deemed to be a waiver of such right or a waiver of any subsequent breach.

ARTICLE 14.
SPECIAL WARRANTY

CONTRACTOR warrants that nothing of monetary value has been given, promised, or implied as remuneration or inducement to enter into the Agreement. CONTRACTOR declares that no improper personal, political or social activities have been used or attempted in an effort to influence the outcome of the competition, discussion, or negotiation leading to the award of this Agreement. Any such activity by CONTRACTOR shall make this Agreement null and void. CONTRACTOR further warrants that all materials and goods supplied under this Agreement shall be of good merchantable quality and that all services will be performed in a good workmanlike manner. CONTRACTOR acknowledges that it will be liable for any breach of this warranty.

ARTICLE 15.
COMMUNICATIONS

Such communications as are required by this Agreement shall be satisfied by mailing or by personal delivery to the Parties at the following addresses:

CONTRACTOR:

CITY:

City Engineer
City of Moscow
206 East Third Street
P O Box 9203
Moscow, Idaho 83843

ARTICLE 16.
NON-APPROPRIATIONS

This Agreement is contingent upon CITY receiving the necessary funding to cover the obligations of CITY. In the event that such funding is not received or appropriated, then, and in that event, CITY's obligations under this Agreement shall cease and each Party shall be released from further performance under this Agreement without any liability to the other Party, and CONTRACTOR shall be entitled to receive just and equitable compensation for any Work satisfactorily completed hereunder.

ARTICLE 17.
APPROVAL REQUIRED AND SEVERABILITY

This Agreement shall not become effective or binding until approved by the CITY. If any part of this Agreement is held unenforceable, the remaining portions of the Agreement will, nevertheless, remain in full force and effect.

ARTICLE 18.
EXECUTION

IN WITNESS WHEREOF, said CONTRACTOR and CITY have caused this Agreement to be executed on the day and year first above written.

CONTRACTOR

CITY

City of Moscow, Idaho

_____

By:

_____

Art Bettge, Mayor

ATTEST:

_____

_____

By: Laurie M. Hopkins, City Clerk

Approved As To Form:

_____
Mia Bautista, City Attorney

ACKNOWLEDGMENT

STATE OF _____)
) ss:
County of _____)

On this ____ day of _____, 2022, before me, the undersigned, a Notary in and for said State, personally appeared _____ and _____known to me to be the person(s) whose name(s) is/are subscribed to the foregoing Agreement and acknowledged to me that he/she/they executed the same in his/her/their capacity as _____ for Blackline, Inc.

_____
Notary Public residing at: _____
(seal) My commission expires: _____

INSTRUCTION TO BIDDERS

IB-1. INTENT OF PLANS AND SPECIFICATIONS

A. It is the intention of these specifications to provide for careful, thorough and workmanlike construction procedure in the installation of material and equipment and in the manufacture or delivery of such materials and equipment. The bidder to whom the contract is awarded shall furnish all the material, equipment and labor necessary to complete said contract in accordance with all of its terms and conditions. All contracts shall be awarded subject to those instructions to bidders.

B. The plans and specifications shall be considered and used together; anything appearing as a requirement of either shall be accepted as applicable to both even though not stated therein or shown. All specifications and notes appearing on the plans shall have the same force and effect as though they were repeated herein.

IB-2. PLANS, SPECIFICATIONS, AND ADDITIONAL INFORMATION

A. Plans and specifications are on file in the office of the City Engineer. Copies of same may be obtained electronically from www.questcdn.com for a non-refundable fee of $20.00. Additional information relative to same may be obtained from the office of the City Engineer.

IB-3. EXAMINATION OF PLANS, SPECIFICATIONS, AND SITE

A. Bidders shall satisfy themselves by personal examination of the plans, specifications, and site of the proposed improvement, and by any other examinations and investigation which they may desire to make, as to the accuracy of the estimate of quantities, the nature of the soil, conditions of the project site, and difficulties to be encountered.

IB-4. PREPARATION AND DELIVERY OF PROPOSAL

A. Bids shall be prepared and submitted upon the "Proposal" form supplied by the City Engineer. Each and every blank provided for in the "Proposal" shall be filled in with ink or typing. Proposals, which are incomplete or submitted on an unauthorized form, may be rejected as informal.

B. After the date and hour set for the opening of the bids, no bidder may withdraw his/her proposal unless award of contract is delayed for a period exceeding the time limits described in IB-8, AWARD OF CONTRACT.

C. If discrepancies exist between the Unit Prices and the Total Price or Bid Total amount, the CITY will use the Unit Prices and calculate a corrected Bid Total.

D. The CITY reserves the right to reject any or all bids, any or all schedules or to accept the bid or schedule deemed to be in the best interest of the CITY.

IB-5. PROPOSAL GUARANTY

A. Each proposal must be accompanied by cash, a certified check, bid bond, or cashier's check in an amount not less than five percent (5%) of the total amount bid. This guaranty or "Good faith token" will be held until the successful bidder has, within ten (10) days from the date of notification of award of contract, executed the contract and furnished approved separate performance and payment bonds, each in an amount equal to one hundred percent (100%) of the amount of the contract. There shall also be submitted with the surety bonds, evidence of public liability insurance coverage in amounts not less than those specified in the general specifications included herein.

IB-6. RETURN OF PROPOSAL GUARANTY

A. Immediately after the bid prices have been compared, the Clerk will return the guaranties accompanying such proposals as in the CITY's judgment will not be considered in awarding the contract. All other proposal guaranties will be held until the contract and other legal requirements the successful bidder must execute, furnish and/or comply with, have been completed, after which they will be returned to the respective bidders whose proposals they accompany.

IB-7. QUALIFICATIONS OF BIDDER

A. The CITY desires that this project shall be built by a contractor who is competent and adequately financed. The CITY may request the Bidder to submit a written statement to show experience in construction work of this character as an indication of qualification and business standing. If required, the Bidder may make his/her statement in such form as may seem appropriate; said statement shall be notarized.

B. This public works project is not financed in whole or in part by federal-aid funds. Bid proposals will be accepted from those contractors only (prime contractors, subcontractors and/or specialty contractors) who, prior to the bid opening, hold current licenses as public works contractors in the State of Idaho.

C. The prime contractor shall submit with his/her proposal a list of the subcontractors and their license numbers.

D. The successful bidder, in addition to listing the names and addresses of subcontractors in his bid, shall, within seven (7) days after opening of the bids, notify the Engineer in writing of the names of all major equipment and material suppliers proposed for the principal parts of the work, and for such others as the Engineer may direct, and shall not employ any subcontractors, (or purchase any equipment), to which the Engineer or the CITY may within a reasonable time object to as incompetent or undesirable.

IB-8. AWARD OF CONTRACT

A. The contract will not be awarded until the CITY is satisfied the successful bidder is reasonably familiar with the class of work upon which he/she has submitted a proposal and has the necessary capital and tools to satisfactorily perform the same. The CITY may request and the bidder must provide the CITY with a current balance sheet and a list of tools owned by the bidder.

B. Within thirty (30) days after the opening of the proposals the CITY will accept one of the proposals or reject all bids. The award will be made upon the basis of the proposal that, in the CITY's judgment, will serve the best interest of the CITY.

C. The contract will not be awarded until the bidder has obtained an appropriate Idaho Public Works License from the State of Idaho, Division of Building and Safety, Public Works Contractors License Board. Subcontractors are also subject to this requirement.

IB-9. FAILURE TO EXECUTE CONTRACT

A. In the event the successful bidder fails to furnish approved performance and payment bonds, execute the contract and comply with all other pertinent legal requirements within ten (10) days after notification by the Engineer of the award of contract, the certified check, bank draft, money order of bid bond will be forfeited to the CITY as liquidated damages. The amount of any such damages will be five percent (5%) only of the total bid submitted. Any excess amount that may have been included in the "good faith token" will be returned to the bidder. The next best proposal will then be considered the successful bid and, at the discretion of the City, be awarded the contract.

IB-10. NONDISCRIMINATION IN EMPLOYMENT

A. The Contractor will not discriminate against any employee or applicant for employment because of race, color, religion, sex, national origin, age, or disability. The Contractor will take action, if necessary, to ensure that applicants are employed, and treated during such employment, without regard to their race, color, religion, sex, national origin, age, or disability. Such action shall include, but not be limited to, the following: employment, upgrading, demotion, or transfer; rates of pay or other forms of compensation; and selection for training, including apprenticeship.

B. The Contractor shall comply with City Ordinance No. 2013-06 Gender Anti-Discrimination in Housing, Employment & Public Accommodations.

IB-11. WAGE RATES

A. Contractors are not required to pay prevailing wages on this project. Prevailing wages no longer are required on Public Works projects in Idaho.

IB-12. CONTRACTOR FOR PUBLIC WORKS TO PAY OR SECURE TAXES AGREEMENT

A. The contractors, in consideration of securing the business of erecting or construction public works in this State, recognizing that the business in which he/she is engaged is of a transitory character, and that in the pursuit thereof, his/her property used therein may be without the State when taxes, excises, or license fees to which he/she is liable become payable, agrees:

1. To pay promptly when due all taxes, (other than real property), excises and license fees due to the State, its subdivisions, and municipal quasi-municipal corporations therein, accrued or accruing during the term of this contract, whether or not the same shall be payable at the end of such term;

2. That if the said taxes, excises, and license fees are not payable at the end of said term, but liability, for the payment thereof exists, even though the same constitute liens upon his/her property, to secure the same to the satisfaction of the respective officers charged with the collection thereof; and

3. That, in the event of his/her default in the payment or securing of such taxes, excises, and license fees, to consent that the department, officer, board, or taxing unit entering into this contract may withhold from any payment due him/her hereunder the estimated amount of such accrued and accruing taxes, excises, and license fees for the benefit of all taxing units to which said contractor is liable.

IB-13. PERFORMANCE PERIOD

A. This work s shall be substantially completed by August 12th, 2022.

IB-14. CONSIDERATION OF MULTIPLE DIVISIONS OF WORK

A. The bidder shall submit a proposal for all divisions, if applicable. Considerations of proposals for each division of work shall be made separately (i.e. one bidder may be awarded one division; another bidder may be awarded one of the other divisions).

IB-15. ALTERNATES

A. If an alternative bid schedule is included, the bidder must submit a bid for each item in the alternate bid schedule. Low bid will be based upon the combined total price of the alternate(s) that the owner elects to use plus the base bid. If the owner elects to use an alternate(s), the amount of the contract will be the amount of the base bid modified in accordance with the amount of the alternate(s). An alternate may be additive to the scope of work described by the base bid items or may be substituted for the base bid item. Unit prices for alternate items will receive the same consideration for award as unit prices for base bid items.

IB-16. SUBCONTRACTORS TO BE LISTED ON BID

A. All bidders shall comply with Idaho Code Section 67-2310. **Failure to comply with Idaho Code Section 67-2310 shall render such bid unresponsive and void**. Information provided pursuant to this section must be current and correct as of the date of the submission of the bid. Do not use the term "mechanical" when identifying any work to be performed on this project.

B. The name, address, Idaho Public Works License Number and bid amount for each subcontractor to be utilized on the project must appear on the bid. Every subcontractor intending to perform plumbing work, and/or heating and air conditioning work, and/or electrical work must include its name, address, and Idaho Public Works License Number which allows it to perform such work, and bid amount for each of the following areas: plumbing work, heating and air conditioning work, electrical work. If a subcontractor intends to perform work in more than one of these specialties, such a subcontractor must list its name, address, Idaho Public Works License Number, and bid amount more than once (i.e., for each of the following subject areas: plumbing work, heating and air conditioning work, electrical work). It is helpful, but not mandatory, that each subcontractor includes its specialty construction category numbers, if any, with its submission of its Idaho Public Works License Number.

C. Every contractor intending to perform its own plumbing work, and/or heating and air conditioning work, and/or electrical work, must include its name, address, and Idaho Public Works License Number which allow it to perform such work for each of the following areas: plumbing work, heating and air conditioning work, electrical work. A contractor does not need to list the amount of the bid for plumbing work, heating and air conditioning work, or electrical work which it intends to perform.

D. Subcontractors, Equipment and Material: The successful bidder, in addition to listing the names and addresses of subcontractors in his/her bid, shall, within seven (7) days after opening of the bids, notify the Engineer in writing of the names of all major equipment and material suppliers proposed for the principal parts of the work, and for such others as the Engineer may direct, and shall not employ any subcontractors, (or purchase any equipment), to which the Engineer or the City may within a reasonable time object to as incompetent or undesirable.

GENERAL CONDITIONS

GC-1. COMPLIANCE

A. The Contractor shall observe and comply with all Federal, State, and Local laws, codes, ordinances, and regulations, including all licensing and permit requirements which, in any manner, apply to the work being performed under this contract. No pleas of misunderstanding or ignorance on the part of the Contractor will in any way serve to modify the provisions of this requirement. The Contractor and his/her surety shall indemnify and save harmless CITY and its employees, agents and representatives against any claim or liability arising from or based on the violation of any such laws, codes, ordinances, or regulations, whether by himself/herself, his/her employees, or his/her subcontractors.

B. All work shall be completed in accordance with the specifications and plans established for this project.

GC-2. DEFINITIONS

Architect	The Project Architect, if such is designated by the Contract Documents.
Attorney	The City Attorney of Moscow, Idaho.
City	The City of Moscow, Latah County, Idaho ("CITY"), a municipal corporation existing under and by virtue of the laws of the State of Idaho. Action herein designated as taken by the CITY is to be considered the acts of the Council acting through the Mayor and Clerk.
City Engineer	The City Engineer of Moscow, Idaho, resident engineers and inspectors acting under his/her orders; their authority being limited to the particular duties to which they are assigned.
City Parks & Facilities Manager	The City Parks & Facilities Manager of Moscow, Idaho, and/or inspectors acting under his/her orders; their authority being limited to the particular duties to which they are assigned.
Clerk	The duly appointed City Clerk of the City of Moscow, Idaho.
Contract Documents	These generally consist of the plans, specifications, agreement, performance bond, payment bond and proof of various types of insurance, including all modifications thereof incorporated in the documents before their execution. These are identified in the Contract.
Contractor	The person, persons, firm, partnership, corporation or other entity contracting to do the work under these

	specifications. The term also includes the Contractor's agents or employees.
Council	The duly elected Council of the City of Moscow, Idaho.
Engineer	The Project Engineer, if such is designated by the Contract Documents.
Subcontractor	The person, persons, firm, corporation or other entity performing work under contract with the "Contractor" but subject, in such performance, to all the requirements of the 'Contract Documents' insofar as they are pertinent.
Bid/Proposal	The written document which is required to be signed by the bidder and which contains the formal statement of price or prices to be paid by the City for the performance required.

GC-3. PLANS AND SPECIFICATIONS AND ADDITIONAL DRAWINGS

A. The plans for this improvement and the specifications accompanying them shall be considered as a whole, and anything shown or called for in one (1) and omitted in the other is as binding as if called for or shown by both. Figure dimensions shall be in all cases used in preference to scale dimensions. The intention of the documents is to include all labor and materials, equipment and transportation necessary for the proper execution of the work. Materials or work described in words so applied having a well-known technical or trade meaning shall be held to refer to such recognized standards.

B. The Engineer shall furnish to the Contractor the necessary plans and specifications required for the execution of the work at no additional cost. The Engineer shall furnish with reasonable promptness, additional instructions, by means of drawings or otherwise, necessary for the proper execution of the work.

C. The Contractor shall submit with such promptness as to cause no delay in his/her own work or in that of any other Contractor, copies of all shop drawings and schedules required for the work of various trades as required by the Engineer, and the Engineer shall pass upon them with reasonable promptness, making desired corrections relating to effects on design. The Contractor shall make any corrections required by the Engineer, file with him/her such corrected copies as the Engineer shall direct, and furnish such other copies as may be needed. The Engineer's approval of such drawings or schedules shall not relieve the Contractor from responsibility for deviation from drawings or specifications, unless he/she has in writing called the Engineer's attention to such deviation at the time of submission, nor shall it relieve him/her from responsibility for errors of any sort in shop drawings or schedules.

D. The Contractor shall keep one (1) copy of all drawings and specifications on the work, in good order, available to the Engineer, CITY, and its representatives.

GC-4. ALTERATION OR MODIFICATION OF CONTRACT DOCUMENTS

A. No alteration or modification of the terms and conditions of the Contract Documents, except by written change order as provided herein, will be binding unless outlined in detail

in a separate written addendum, and then only when properly signed and attested by the Contractor, CITY, and the City Engineer.

GC-5. INVESTIGATION BY BIDDERS

A. The instructions to bidders cover the general scope of this investigation under the article entitled "Examination of the Plans, Specifications and Site". Bidders are specifically instructed to faithfully examine and investigate the entire bid prices submitted on their proposals. No bidder may, without the consent of CITY, withdraw his/her proposal or claim damages or extra compensation by reason of any error or omission made by said bidder in preparing his/her proposal.

GC-6. NON-DISCRIMINATION

A. The Contractor shall not discriminate against any employee or applicant for employment on the basis of race, color, religion, sex, national origin, age, or disability.

B. The Contractor shall comply with City Ordinance No. 2013-06 Gender Anti-Discrimination in Housing, Employment & Public Accommodations.

GC-7. INTERPRETATION OF THE SPECIFICATIONS

A. In the event the specifications and plans are deficient or not clearly expressed, the parties submitted proposals hereunder must apply to the City Engineer for the required information or explanation before the bids are submitted.

B. The request for such explanation or interpretation shall be made in writing and the person submitting the request will be responsible for its prompt delivery. Such interpretation or explanation will be given by the City Engineer in writing and a copy will be filed in the office of the City Clerk. CITY will not be responsible for any other explanation or interpretation of the plans and specifications. After submission of bids, no bidder shall claim any misunderstanding in or to the nature of the amount of work to be performed or attempt to hold CITY or any person responsible for any error or omission that may have been made by the bidder.

GC-8. CONTRACTS

A. Contract Form

1. A copy of the construction agreement form is included in these documents.

B. Execution of Agreement

1. Within ten (10) days after receiving properly prepared Contract Documents from CITY, the successful bidder shall sign the agreement. Work shall be started upon written notice to proceed from the City Engineer.

C. Subcontracts

1. The Contractor agrees that he/she is as fully responsible to CITY for the acts and omissions of his/her subcontractors and of persons either directly or indirectly employed by them, as he/she is for acts and omissions of persons directly employed by him/her, and that the Contractor shall hold CITY harmless for any activities of such subcontractors and shall indemnify and defend CITY from damages and

claims of whatever nature relating or resulting to the activities of such subcontractors.

2. Relations of Contractor and Subcontractor: The Contractor agrees to bind every subcontractor to the terms of the construction contract, the information to bidders, the general conditions, the plans, and the specifications as far as applicable to his/her work, including the following provisions of this article. Nothing in this section shall create any obligation on the part of CITY to pay to or to see to the payment of any sums to any subcontractor.

   a. The Contractor shall bind every subcontractor to the following:

      (1) To be bound to the Contractor by the terms of the Contract Documents, and to assume toward him/her all the obligations and responsibilities that he/she, by those documents, assumes toward the CITY. Nothing contained in the Contract Documents shall create any contractual relation between any subcontractor and CITY.

      (2) To submit to the Contractor applications for payment in such reasonable time as to enable the Contractor to apply for payment. The Engineer shall, on request, furnish to any subcontractor, wherever practical, evidence of the amounts certified on his/her account.

      (3) To make all claims for extras, for extension of time and for damages for delays or otherwise, to the Contractor in the manner provided in the general conditions for like claims by the Contractor upon the CITY, except that the time for making claims for extra cost is one (1) week from the date such claim arises.

   b. The Contractor agrees:

      (1) To be bound to the subcontractor by all the obligations that CITY assumes to the Contractor under the Contract Documents.

      (2) To pay the subcontractor for conforming work, upon the payment of certificates, if issued under the terms of payments for the work, the amount allowed to the Contractor on account of the subcontractor's work to the extent of the subcontractor's interest therein.

      (3) To pay the subcontractor for conforming work, upon the payment of certificates, if issued otherwise than as in (2) so that at all times his/her total payments shall be as large in proportion to the value of the work done by him/her as the total amount certified to the Contractor is to the value of the work done by him/her.

      (4) To pay the subcontractor for conforming work to such extent as may be provided by the Contract Documents or the subcontract if either of these provides for earlier or larger payments than the above.

(5) To pay the subcontractor for conforming work on demand on his/her work or materials as far as executed and fixed in place, less retained percentage, at the time the certificate should be issued, even though the Engineer fails to issue it for any cause not the fault of the subcontractor.

(6) To make no demands for liquidated damages or penalty for delay in any sum in excess of such amount as may be specifically named in the subcontract.

(7) That no claim for services rendered or material furnished by the Contractor to the subcontractor shall be valid unless written notice thereof is given by the Contractor to the subcontractor during the first ten (10) days of the calendar month following that in which the claim originated.

(8) To give the subcontractor an opportunity to be present and to submit evidence in any hearing involving his/her rights.

(9) To pay each subcontractor for satisfactory performance of its contract no later than twenty (20) calendar days from receipt of each payment the Contractor receives from CITY. The Contractor shall return retainage to each Subcontractor within twenty (20) calendar days after the Subcontractor's work is satisfactorily completed.

(10) To certify with each estimate payment to subcontractors has been made within the prescribed time frames. The certification will be made on forms provided by CITY, and returned within twenty (20) calendar days of receiving the estimate payment.

D. CITY's Right to Terminate Agreement - If the Contractor:

1. Fails to begin work within a reasonable time after the effective date of "Notice to Proceed," or

2. Fails to supply sufficient skilled workmen or suitable materials or equipment to complete the work within the time limits specified; or

3. Performs the work unsuitably or neglects or refuses to remove materials or to re-perform such work which is not in accordance with the plans and specifications; or

4. Discontinues the prosecution of the work for more than ten (10) days; or

5. Fails to resume work which has been discontinued within a reasonable time after notice to do so; or

6. Fails to make prompt payments to subcontractors or for labor, materials, or equipment; or

7. Disregards laws, ordinances, or the instruction of the Engineer; or

8. Becomes insolvent or is declared bankrupt, or commits any act of bankruptcy or insolvency; or

9. Makes an assignment for the benefit of creditors; or

10. Is guilty of a substantial violation of any provisions of the Agreement; in any such event(s), CITY, upon recommendation of the Engineer that sufficient cause exists to justify such action may, without prejudice to any other right or remedy, give notice to the Contractor and his/her surety of such delay, neglect, or default. If the Contractor or his/her surety, within a period of ten (10) days after such notice, does not proceed in accordance therewith, then CITY shall have full power and authority, without violating the Agreement, to take the prosecution of the work from the Contractor. CITY may appropriate or use any or all materials and equipment on the grounds as may be suitable and acceptable and may enter into an agreement for the completion of said contract according to the terms and provisions thereof, or use such other methods as may be required for the completion of the contract in an acceptable manner.

11. Costs and charges incurred by CITY, together with the cost of completing the work under the Agreement, will be deducted from any moneys due or which may become due the Contractor. If such expense exceeds the sum which would have been payable under the Agreement, then the Contractor and its surety shall be liable and shall pay to CITY the amount of such excess.

E. Contractor's Right to Stop Work or Terminate Agreement:

1. If the work should be stopped pursuant to lawful order of a court of competent jurisdiction, or pursuant to lawful order of other public authority having jurisdiction, for a period of three (3) months, through no act or fault of the Contractor or of anyone employed by him/her, or if the Engineer should fail to issue any certificate for payment within twenty-two (22) days after it is due, or if CITY should fail to pay to the Contractor within twenty-two (22) days of its maturity and presentation, any sum certified by the Engineer or awarded by the court, then the Contractor may, upon twenty-two (22) days' notice to CITY and Engineer, stop work or terminate this Agreement or recover from CITY payment for all work executed and any loss sustained upon any plant or materials and reasonable profit and damages.

F. Assignment:

1. The Contractor shall not assign this contract or sublet or subcontract any portion of it without the prior written consent of CITY nor shall the Contractor assign any moneys due or to become due to him/her hereunder, without the prior written consent of CITY. Any such assignment or sublet without such prior written consent shall be null and void and shall be a ground for termination for cause of this contract by CITY.

GC-9. QUANTITIES FURNISHED BIDDERS

A. Unit Price Contract. The estimates of quantities are only approximate and are for the purpose of comparing bids. CITY reserves the right to increase or decrease individual items in such amount as may be in CITY'S sole judgment, to CITY'S best interests depending upon conditions encountered or observed during the Project. It shall be

CONTRACTOR'S responsibility to satisfy itself as to the accuracy of the estimates. The Contractor will be paid for the actual quantities of work finally installed or performed at the applicable unit prices stated in his/her proposal.

1. The unit price of an item of Unit Price Contract shall be subject to reevaluation and adjustment under the following conditions:

   i. If the total cost of a particular item of Unit Price Contract amounts to fifteen percent (15%) or more of the total Contract Price at the time of award and the variation in the quantity of that particular item of Unit Price Contract performed by CONTRACTOR differs by more than twenty-five percent (25%) from the estimated quantity of such item indicated in the Bid Form; and

   ii. If there is no corresponding adjustment with respect to any other item of Work; and

   iii. If CONTRACTOR thinks that CONTRACTOR has incurred additional expense as a result thereof; or if the CITY thinks that the quantity variation entitles the CITY to an adjustment in the unit price, either the CITY or CONTRACTOR may demand a Change in Contract Price. Such Change in Contract Price shall be based upon any increase or decrease in costs due solely to the variation above one hundred twenty-five percent (125%) or below seventy-five percent (75%) of the estimated quantity. If the quantity variation is such as to cause an increase in Contract Time necessary for completion, CONTRACTOR may request an extension of Contract Time for the Delay in completion resulting from performing the quantity in excess of one hundred twenty-five percent (125%) of the estimated quantity. If the parties are unable to agree on the effect of any such variation in the quantity of unit price work, either the CITY or CONTRACTOR may make a claim for an adjustment in the Contract Price and/or Contract Time in accordance with the General Conditions.
   Items identified as contingency items will be paid at the unit price regardless of variation in quantity of that particular item of Unit Price Work performed by CONTRACTOR.

B. Lump Sum Contract. The Contractor shall include in the contract sum all allowances named in the Contract Documents and shall cause the work so covered to be performed for such sums as the Engineer may direct, the contract sum being adjusted in conformity therewith. The Contractor declares that the contract sum includes such sums for expenses and profit on account of cash allowances as he/she deems proper. No demand for expenses or profit other than those included in the contract sum shall be allowed. The Contractor shall not be required to employ for any such work persons whom he/she has reasonable objection.

GC-10. MAJOR CHANGES

A. If unforeseen conditions require a substantial change in the dimensions of a structure, location of underground utilities, or major variation of a similar nature from the original plans, such change shall be covered by a change order. The change order is to set forth in complete detail the nature of the change and reasons therefore, including compensation to be paid and time allotted the Contractor. The change order shall also detail whether the

change constitutes an addition or reduction with respect to the original contract costs. Should additional or supplemental drawings be required, they will be furnished by the Engineer providing the Engineer determines the change is warranted.

B. During the progress of the work, if subsurface or latent physical conditions are encountered at the site differing materially from those indicated in the contract or if unknown physical conditions of an unusual nature, differing materially from those ordinarily encountered and generally recognized as inherent in the work provided for in the contract, are encountered at the site, the party discovering such conditions shall promptly notify the other party in writing of the specific differing conditions before they are disturbed and before the affected work is performed.

C. Upon written notification, the Engineer will investigate the conditions, and if it is determined that the conditions differing materially and cause an increase or decrease in the cost or time required for the performance of any work under the contract, and adjustment, excluding loss of anticipated profits, will be made and the contract modified in writing accordingly. The Engineer will notify the Contractor of the determination whether or not an adjustment of the contract is warranted.

D. No contract adjustment which results in a benefit to the Contractor will be allowed unless the Contractor has provided the required written notice.

GC-11. EXTRA WORK

A. CITY shall have the right to issue written change orders to Contractor within the general scope of the work without the consent of the Contractor and without notice to any surety of the Contractor. If for any reason extra work is ordered by CITY and the compensation for such extra work cannot be agreed upon in advance, such work will be paid for at the actual cost of the labor, materials, and field supervision required, with the addition of not to exceed a total of fifteen percent (15%) to cover general overhead and profit (including subcontractor's general overhead and profit), use of small tools, payment of insurance and medical aid, taxes, and all other costs in connection therewith. If a fixed sum or unit prices can be agreed upon for any extra work that may be ordered, such sum and prices, together with a description of the work, shall be made a part of the written order. Such orders will be prepared by the Engineer in triplicate, with one (1) copy to CITY, one (1) to the Contractor and one (1) retained by the Engineer.

B. If during the progress of the work, the Contractor believes he/she is entitled to extra compensation for performing certain phases or items, any and all such claims must be promptly presented to CITY and the Engineer. Unless such claim is presented in writing within fifteen (15) days after it occurs, CITY may, at its discretion, reject the claim. CITY shall specifically reject claims of this nature that have been withheld by the Contractor for more than thirty (30) days.

GC-12. MONTHLY PAYMENTS

A. The Contractor shall file a monthly request for payment with the Engineer on the 20th day of each month for all work completed to the 20th day of the month. If monthly requests for payment are not received as stated, the CITY shall have the right to withhold payment for that month. The Engineer shall review Contractor's monthly requests for payment on the first day of the month for all work completed to the 20th day of the preceding month,

and shall certify such requests for payment. Progress payments will be made by the CITY for all work completed to the 20th day of the preceding month and duly certified by the Engineer, on or before the 10th day of each month in cash or interim warrants. These payments will be equal to ninety-five percent (95%) of the total amounts of the certified requests for payment. The CITY shall retain five (5) percent of the total amount owing the Contractor after the contract has been completed and accepted by the CITY for a minimum period of thirty (30) days. Should any liens or claims be filed during the retention period, the retained percentage will be held until a satisfactory agreement is reached between the CITY, the Contractor, and the Contractor's surety. Before final payment will be made by the CITY, Contractor agrees that it shall furnish the CITY with satisfactory evidence that all persons, including subcontractors, that have performed work or furnished materials pursuant to this Agreement and are entitled to a lien for their work or materials under the laws of the State of Idaho have been fully paid or are no longer entitled to such lien, and the Contractor shall file with the Clerk a notarized affidavit to that effect. Final payment will not be made until CITY has received a tax release from the Idaho State Tax Commission per GC-38.

B. Progress payments for materials shall be considered eligible only if the materials are jobsite, and accurate, clearly detailed invoices from the material supplier are furnished. The ownership of these materials shall, upon payment from CITY to the Contractor, be vested in CITY, and such materials may not be removed from the jobsite without written authorization of the Engineer.

C. The CITY may, but is not obligated to, withhold any payments to the Contractor, in addition to retained percentage, in such an amount or amounts as may be necessary to cover:

1. Payments that may be earned or due for just claims or labor or materials furnished in and about the work;

2. Defective and/or condemned and/or non-conforming work or materials not remedied;

3. Failure of the Contractor to make proper payments to a subcontractor;

4. Reasonable doubt that this contract can be completed for the balance then unpaid;

5. Damages to another Contractor where there is evidence thereof;

6. Payments that cover all taxes, excises and license fees due the State and its taxing entities whether or not these moneys are yet due and payable.

D. CITY shall have the right, but not the obligation, to disperse and shall have the right to act as agent for the Contractor for the limited purpose of dispersing such funds as have been withheld pursuant to this paragraph to the party or parties who are entitled to payment there from. In the event CITY elects to disperse such funds, CITY shall render to the Contractor a proper accounting of all such funds dispersed on behalf of the Contractor. Nothing herein shall create in such party or parties entitled to payment a cause of action against CITY for failure to exercise its rights pursuant to this section. Contractor further agrees that no cause of action shall accrue on behalf of the Contractor as a result of CITY's exercise of such right to disperse.

GC-13. TIME OF COMPLETION/LIQUIDATED DAMAGES

A. The date of completion for this Agreement shall be defined by the Instruction to Bidders included in the Contract Documents. Contractor agrees that time is of the essence in the performance of this Agreement, and that failure to complete this Agreement by such date will result in financial injury to CITY. Contractor further agrees that failure to complete this Agreement by such date shall subject Contractor to payment of liquidated damages to CITY. The Contractor also recognizes the delays, expense and difficulties involved in proving in a legal proceeding of the actual loss suffered by CITY occasioned by failure to complete the work on time. Accordingly, instead of requiring such proof, CITY and the Contractor agree that as liquidated damages for delay (but not as a penalty) the Contractor shall pay to CITY the sum of one-half of one percent (0.005) of the Agreement amount, including change orders, will be deducted by CITY for each and every calendar day that the date of final completion is delayed. Should such deductions exceed the outstanding amount of the Agreement, the Contractor and its surety shall be liable for the excess.

B. The Contractor herewith specifically waives claims for damages for any hindrance or delay. Contractor shall be granted extensions of time for which liquidated damages will not be claimed by CITY for the following reasons:

1. A delay caused the Contractor by any suit or other legal action against CITY (except a legal action instituted by the Contractor) regarding this Project shall entitle the Contractor to an equivalent extension of time unless the period of such delay exceeds ninety (90) days. When such period is exceeded, CITY will, upon request by the Contractor in writing, either negotiate termination of the Agreement or grant a further extension of time, whichever shall be agreed.

2. Time lost by inclement weather, causing suspension of work, will entitle the Contractor to an extension equivalent to the total time so lost, whether it be a single continuous period or the accumulated total of several periods. Inclement weather is defined as that which, in the opinion of the Engineer, would seriously affect the progress of the work or the quality of the work.

3. Should unforeseen conditions require the performance under a change order, or work more complex or difficult than that originally specified and shown on the plans, and such work, in the Contractor's opinion, requires more time to execute than the proportional increase in dollar value, the Contractor shall state to CITY and Engineer, in writing prior to the performance of such work, his/her estimate of the added time required for such work. CITY may, if such estimate be reasonable, allow an added extension proportionate to the increase in the dollar value of work.

C. If the performance of all or any portion of the work is suspended or delayed by the Engineer for an unreasonable period of time (not originally anticipated, customary, or inherent to the construction industry) and the Contractor believes that additional compensation and/or contract time is due as a result of such suspension or delay, the Contractor shall submit to the Engineer in writing a request for adjustment within seven (7) calendar days of receipt of the notice to resume work. The request shall set forth the reasons and support for such adjustment.

D. Upon receipt, the Engineer will evaluate the Contractor's request. If the Engineer agrees that the cost and/or time required for the performance of the agreement has increased as a result of such suspension and the suspension was caused by condition beyond the control of and not the fault of the Contractor, its suppliers, or subcontractors at any approved tier, and not caused by weather, the Engineer will make adjustment as provided (excluding profit) and modify the agreement in writing accordingly. The Engineer will notify the

Contractor of the determination whether or not an adjustment of the Agreement is warranted.

E. No Agreement adjustment will be allowed unless the Contractor has submitted the request for adjustment within the time prescribed.

F. No Agreement adjustment will be allowed under this clause to the extent that performance would have been suspended or delayed by any other cause, or for which an adjustment is provided for or excluded under any other term of condition of this Agreement.

GC-14. ABANDONMENT OF WORK

A. If the Contractor abandons the work for a period of twenty-one (21) days for any cause other than failure of CITY to make monthly payments, or refuses to comply with the provisions of the plans and specifications, CITY shall have the right to notify the Contractor's surety and require said surety to complete the work in accordance with the aforesaid plans and specifications. In the event no liens or claims have been filed and CITY fails to make progress payments, the Contractor may then, at his/her option, cease operations until payments are resumed by notifying CITY of his/her intention to cease operations for this cause. Should the Contractor abandon the work, fail or refuse to complete the work embraced in this contract, or fail to pay just claims for labor and materials, CITY reserves the right to charge against the Contractor, and Contractor agrees to pay, all legal, engineering, or other costs caused by such abandonment, failure or refusal. The Contractor agrees that such legal costs shall also include CITY's costs of defending any suits in connection with such abandonment, failure or refusal and nonpayment of claims wherein CITY is made a co-defendant.

GC-15. AUTHORITY OF ENGINEER

A. The Engineer shall decide questions which may arise as to the quality and acceptability of materials furnished and work performed, and as to the manner of performance and rate of progress of the work; questions which may arise as to the interpretation of the plans and specifications; and questions as to the satisfactory and acceptable fulfillment of the terms of the Agreement.

B. The Engineer, including his/her employees and agents, shall at all times have access to the work wherever it is in preparation or progress and the Contractor shall provide proper facilities for such access and for inspection. Inspections by the Engineer shall be promptly made. If any work should be covered up without approval or consent of the Engineer, it shall be uncovered, if required by the Engineer, for examination. The costs associated with the uncovering of such non-approved work shall be the responsibility of Contractor and shall not be charged to CITY.

C. Reexamination of questioned work may be ordered by the Engineer and if so ordered the work must be uncovered by the Contractor. If such work be found in accordance with the plans and specifications, CITY shall pay the cost of the reexamination and replacement. If such work is found not in accordance with the plans and specifications, the Contractor shall pay such costs.

D. If the performance of all or any portion of the work is suspended or delayed by the Engineer for an unreasonable period of time (not originally anticipated, customary, or inherent to the construction industry) and the contractor believes that additional compensation and/or Agreement time is due as a result of such suspension or delay, the Contractor shall submit to the Engineer in writing a request for adjustment within seven (7) calendar days of receipt of the notice to resume work. The request shall set forth the reasons and support for such adjustment.

E. Upon receipt, the Engineer will evaluate the Contractor's request. If the Engineer agrees that the cost and/or time required for the performance of the Agreement has increased as a result of such suspension and the suspension was caused by conditions beyond the control of and not the fault of the Contractor, its suppliers, or sub-contractors at any approved tier, and not caused by weather, the Engineer will make an adjustment and modify the Agreement in writing accordingly. The Engineer will notify the Contractor of the determination whether or not an adjustment of the Agreement is warranted.

F. In making the Agreement adjustment a markup for profit will only be allowed on changed or extra work caused by the delay or suspension. No profit will be allowed on any other delay or suspension costs including, but not limited to, standby costs or extended indirect costs. Payment for changed and extra work will be made in accordance with section GC-11.

G. No contract adjustment will be allowed unless the Contractor has submitted the request for adjustment within the prescribed time.

GC-16. PERFORMANCE AND PAYMENT BONDS

A. The Contractor shall execute a separate performance bond and payment bond, each in penal amounts at least equal to one hundred percent (100%) of the of the full Agreement price, such bonds to be executed by a corporate bonding company (surety) licensed to do business in the State of Idaho and which is acceptable to CITY. Such corporate bonding company (surety) shall be required to be named on the current list of "Surety Companies Acceptable on Federal Bonds" as published in the Treasury Department Circular Number 570. The premiums of such bonds shall be paid by Contractor. The performance bond shall be conditioned upon the Contractor's faithful performance of all the covenants and agreements on the part of the Contractor to be kept and performed at the times and in the manner set forth in the Agreement, including the repair or replacement where required, or the cost of repair or replacement, of all work performed under the terms of this Agreement. The payment bond shall be conditioned upon the payment to all persons, including subcontractors, who have, and fulfill, contracts for performing labor and furnishing materials in the prosecution of the work provided for in such Agreement, provided that every such payment bond shall be construed, regardless of its language, as incorporating within its provisions the obligation to pay those persons who furnish labor or materials as stated in the Contract Documents.

B. Such bonds shall remain in full force and effect during the term of this Agreement and during the terms of any warranty required by the specifications and shall be held in the custody of CITY. The current power of attorney for the persons who sign for the surety company shall be attached to the bond. The power of attorney shall be sealed and certified with a "first hand signature" by an officer of the surety. A facsimile signature shall not be acceptable to CITY.

C. If, at any time, a surety on any such bond is declared as bankrupt or loses its right to do business in the State of Idaho or is removed from the list of surety companies accepted on Federal bonds, the Contractor shall, within ten (10) days after notice from CITY to do so, substitute an acceptable bond (or bonds) in such form and sum signed by such other surety or sureties as may be satisfactory to CITY. The expense of such replacement bonds shall be borne by the Contractor. No further payments by CITY pursuant to this Agreement shall be deemed due nor shall be made until the new surety or sureties shall have furnished an acceptable bond to CITY.

GC-17. INSURANCE/CITY TO BE NAMED AS ADDITIONAL INSURED

A. The Contractor shall not commence work until he/she has obtained all insurance required under this section or until he/she has satisfied CITY in this respect; nor shall he/she allow any subcontractor to commence work until such subcontractor has also obtained such required insurance applicable to such subcontractor's work. The Contractor shall maintain such required insurance coverage throughout the term of this Agreement as will hold CITY harmless and shall indemnify CITY for any losses arising out of the Contractor's operations, including any contingent liability arising there from. The cost of such insurance shall be borne by the Contractor. The Contractor shall furnish copies of all insurance policies and/or certificates of insurance to CITY at the time of execution of this Agreement. Each policy shall include a provision to the effect that it shall not be subject to cancellation, or reduction in the amounts of its liabilities, or any other material change, until notice has been given in writing to CITY and the Engineer not less than fifteen (15) days prior to such action. Contractor shall further cause CITY to be named as an additional insured on all applicable insurance policies.

B. The Contractor shall take out and maintain during the term of this Agreement, statutory worker's compensation insurance for all employees who will work on this Project, and if any work is subcontracted, the Contractor shall require the subcontractor similarly to provide such insurance for all of the latter's employees unless they are included under the protection afforded by the Contractor.

C. The Contractor shall take out and maintain during the term of this Agreement comprehensive public and general liability insurance. The comprehensive public and general liability insurance shall have, at a minimum, a coverage limit of at least FIVE HUNDRED THOUSAND DOLLARS ($500,000.00) per occurrence, and ONE MILLION DOLLARS ($1,000,000.00) aggregate. Policies containing deductible clauses will not be acceptable.

D. The Contractor shall take out and maintain, during the term of this Agreement, builders' risk insurance which shall be written in completed value form, shall protect the Contractor and CITY against 'all-risks' of direct physical loss to buildings, structures, equipment and materials to be used in providing, performing or completing the project. This insurance shall be written with limits not less than the insurable value of the project at completion. This insurance shall include coverage while equipment or materials are in warehouses, during installation, during testing, and after the project is completed, but prior to final payment.

E. Contractor's Responsibility for Materials. The Contractor shall be responsible for all materials and work performed until final acceptance by CITY.

F. Contractor shall require all subcontractors to maintain the above referenced insurance requirements and shall verify that such requirements have been met by requiring all subcontractors to provide certification therefore.

GC-18. PATENT ROYALTIES AND PROCESS FEES

A. The Contractor shall furnish CITY a license or licenses for the use of any process or processes in connection with this Project. The Contractor shall include in the unit price bid any patent royalties or license fees for equipment installed or construction methods used.

GC-19. CONTRACTOR RESPONSIBLE FOR WORK

A. The Contractor shall be responsible for all work until its acceptance by the CITY.

B. The Contractor shall be responsible for all quality control including but not limited to tests and inspections; correction, removal of defective work.

1. Tests and Inspections

a. Contractor shall give Engineer timely notice of readiness of the Work for all required inspections, tests, or approvals and shall cooperate with inspection and testing personnel to facilitate required inspections or tests.

b. Contractor shall employ an independent testing laboratory or testing agency and shall be responsible for arranging and shall pay for all specified tests, inspections, and approvals (including tests, inspections, and approvals to be paid for on a cash allowance basis) required for CITY's and Engineer's acceptance of the Work at the site except: costs incurred in connection with tests or inspections as otherwise specifically provided in the Contract Documents.

c. If Laws or Regulations of any public body having jurisdiction require any Work (or part thereof) specifically to be inspected, tested, or approved by an employee or other representative of such public body, Contractor shall assume full responsibility for arranging and obtaining such inspections, tests, or approvals, pay all costs in connection therewith, and furnish Engineer the required certificates of inspection or approval.

d. Contractor shall be responsible for arranging and obtaining and shall pay all costs in connection with any inspections, tests, or approvals required for Owner's and Engineer's acceptance of materials or equipment to be incorporated in the Work; or acceptance of materials, mix designs, or equipment submitted for approval prior to Contractor's purchase thereof for incorporation in the Work. Such inspections, tests, or approvals shall be performed by organizations acceptable to City and Engineer.

e. If any Work (or the work of others) that is to be inspected, tested, or approved is covered by Contractor without written concurrence of Engineer, it must, if requested by Engineer, be uncovered for observation.

f. Uncovering Work as provided in paragraph e. above shall be at Contractor's expense unless Contractor has given Engineer timely notice of Contractor's intention to cover the same and Engineer has not acted with reasonable promptness in response to such notice.

GC-20. USE OF COMPLETED PORTION

A. CITY reserves the right to use and occupy any portion of the improvement which has been completed sufficiently to permit use and/or occupancy, and such use and/or occupancy shall not be construed as an acceptance of the work as a whole or any part thereof. Any claims which CITY may have against the Contractor shall not be deemed to have been waived by such use and/or occupancy.

GC-21. SIGNATURES

A. A proposal made by a corporation shall be signed and sealed by the legally authorized officers of said corporation. If awarded the contract, the Agreement shall also be executed by proper authorized officers and be affixed with the corporate seal. If a proposal or contract is signed by an agent, such agent shall furnish satisfactory written evidence of the

agent's authority to sign as the legal representative of the bidder. An authorized partner of a co-partnership may sign the Agreement subject to the approval of the Attorney, who may, at his/her discretion, require each and every member of the co-partnership to sign the Agreement.

GC-22. ORDERS TO BEGIN WORK

A. The successful bidder shall not begin work until after the Agreement has been executed and the surety bond and insurance has been approved by the Attorney. The order for the Contractor to begin work shall be issued by the Engineer by a written "Notice to Proceed".

GC-23. ORDER OF WORK

A. The Agreement period and time of completion will be as set forth in the Instruction to Bidders included in the Contract Documents.

B. GC-13 "Time of Completion/Liquidated Damages" of the General Conditions shall apply to interim as well as final completion dates.

C. The specific details of the order of work will be established by the Engineer before construction begins. Before the successful bidder is authorized to begin work, he/she shall attend a pre-construction conference with the Engineer. At this time the successful bidder shall present a written schedule for the entire Project, specifying the beginning and completion dates for each phase of work. Once approved by the Engineer, this schedule shall be adhered to by the Contractor and he/she shall employ the necessary work force and equipment to maintain such schedule. Contractor further agrees that the approval by the Engineer of such schedule shall not create any liability to the Engineer or CITY for Contractor's means, methods, sequences, techniques or site safety.

GC-24. EFFICIENCY OF OPERATION/LICENSING

A. The work embraced in this Project shall be started at the earliest possible date after issuance of the Notice to Proceed, and shall be prosecuted regularly and without interruption thereafter, unless otherwise directed by the Engineer. The Contractor shall furnish work force and equipment sufficient to accomplish full completion of the work within the time specified in the proposal and Agreement. The Contractor shall at all times employ efficient and experienced workers. Contractor shall also require and verify that all workers and subcontractors are licensed in accordance with law and/or regulation.

GC-25. PROTECTION OF WORK AND PROPERTY

A. The Contractor shall exercise particular care in protecting surrounding buildings, structures, trees, and property from injury during the demolition and construction operation, and shall be responsible for their protection and shall repair or compensate the CITY thereof for any damage which may result from such demolition and construction operations. The expense of such compensation or repair shall be borne by Contractor, and shall not be the responsibility of CITY.

B. The Contractor shall exercise particular care in protecting trees, located on private or public property, from injury during the demolition and construction operations. If the Contractor's duties under this Agreement shall cause any damage, mutilation, or destruction whatsoever, of any tree, due to Contractor's need to remove, top, excavate, fill, or compact the roots of such tree, or by the placement or storage of any materials which are hazardous to trees, near such tree, the Contractor shall:

1. Inform the City Engineer in writing of such need; and

2. Plot the location of such tree on the site plan which is the subject of this Agreement; and

3. Comply with all permit requirements as set forth in the Community Forest Ordinance, Moscow City Code §5-8-1 *et seq*.

C. Any utilities damaged by the Contractor shall be repaired by the Contractor and the Contractor shall be responsible to maintain temporary service until such damage is repaired. The expense of such repair and/or temporary service shall be borne by Contractor, and shall not be the responsibility of CITY.

D. The Contractor shall provide and maintain temporary sidewalks, warning lights, barricades and other preventive means to safeguard pedestrian and vehicular traffic around the construction, as deemed necessary by CITY.

E. During all construction operations, the Contractor shall construct and maintain such facilities as may be required to provide access by all property owners to their property. No person shall be cut off from access to his/her residence or place of business unless the Contractor has made a special arrangement with the affected persons.

F. Construction operations and parking of vehicles shall be confined to areas designated by CITY. Contractor shall consult the proper traffic regulatory authorities regarding the routing of trucks and other vehicles, and shall follow the direction of such authorities.

G. Any structures, tanks, mechanisms or equipment damaged by the Contractor shall be repaired at the Contractors expense. Any fines or penalties incurred by CITY as a result of any damages to the facilities shall be paid or mitigated by the Contractor.

GC-26. RESPONSIBILITY FOR SAFETY

A. The Contractor shall be responsible for the safety of his/her work, equipment, and materials, until the finished project is accepted by CITY.

GC-27. GUARDS AND BARRICADES

A. The Contractor shall erect and maintain such barricades, detour signs and warning lights as will effectively mark any hazards or detours and the Contractor shall be liable for any damage occasioned by his/her acts or negligence, or the acts or negligence of his/her employees, agents or subcontractors, and shall indemnify CITY against loss and/or liability for any such damage, acts or negligence. Traffic signs shall be in accordance with the standards presented in the most current edition of the "Manual on Uniform Traffic Control Devices".

GC-28. EXISTING TRAFFIC SIGNS AND FACILITIES

A. Existing traffic and street name signs which will interfere with construction shall be removed by the Contractor and stored in a safe place. These signs shall not be removed until the Contractor has obtained the consent of the traffic regulatory authorities having jurisdiction and until the necessary measures have been taken to safeguard traffic after the signs have been removed. Preservation and maintenance of the signs shall be the sole responsibility of the Contractor. As soon as sign location no longer interferes with work, the Contractor shall reset all such signs at locations indicated by the traffic regulatory

authorities having jurisdiction, in cooperation with the Engineer and Streets Department. All costs incurred in work outlined above shall be considered as incidental to the construction contract, and shall be borne by Contractor.

GC-29. MAINTAINING POSTAL SERVICE

A. Postal service shall be maintained in accordance with instructions of the U.S. Post Office Department. The Contractor shall be responsible for moving mail boxes to temporary locations designated by the Post Office Department, and at completion of the work he/she shall replace them in locations and in condition satisfactory to the Post Office Department.

B. It will be the Contractor's responsibility to contact the U.S. Post Office Department for their requirements in maintenance of postal service and to follow those requirements.

C. In cases where posts upon which the box or boxes are fastened are in such condition that they cannot be reset, the Contractor shall furnish posts for this purpose at his/her own expense.

D. All costs incurred in work outlined above shall be considered as incidental to the construction contract, and shall be borne by Contractor.

GC-30. EMERGENCY WORK

A. The Contractor will not be allowed added compensation for any emergency work performed on Sundays or legal holidays unless such work is ordered in writing by the Engineer.

GC-31. SUPERVISION OF WORK

A. During the progress of the work, the Contractor shall employ a competent superintendent and any necessary assistants at the job site. The superintendent shall not be changed except with the approval of the Engineer (or upon the order of the Engineer should the superintendent be or become unsatisfactory to the Engineer) unless the superintendent proves to be unsatisfactory to the Contractor and ceases to be in his/her employ. The superintendent shall represent the Contractor in the Contractor's absence and all directions given to him/her shall be as binding as if given to the Contractor. Important directions shall be so confirmed on written request in each case.

B. The Contractor shall give efficient supervision to the work, using his/her best skill and attention. He/she shall carefully study and compare all drawings, specifications and other instructions and shall at once report to the Engineer any error, inconsistency or omission which he/she may discover, but he/she shall not be held responsible for their existence of discovery.

GC-32. CORRECTION AND COMPLETION OF WORK

A. Correction of Work before Final Payment:

1. The Contractor shall promptly remove from the premises all materials condemned by the Engineer as failing to conform to the Agreement, whether incorporated in the work or not, and shall re-execute any work condemned by the Engineer as failing to conform to the Agreement, and the Contractor shall promptly replace such non-conforming materials and re-execute such non-conforming work in accordance with the Agreement, such costs of replacement and re-execution to be borne by Contractor at no additional expense to CITY.

2. If the Contractor does not re-execute such non-conforming work and/or remove and replace such non-conforming materials within a reasonable time, fixed by written notice of the Engineer, then and in that event CITY may remove them and may store the material at the expense of the Contractor. If the Contractor does not pay the expenses of such removal within ten (10) days' time thereafter, CITY may, upon ten (10) days written notice, sell such materials at auction or at private sale and shall account to Contractor for the net proceeds thereof, after deducting all the costs and expenses of such removal, storage, sale and repair. Nothing contained herein shall relieve the Contractor from his/her responsibility to perform the work in accordance with the Contract Documents, nor to reduce the liability of the Contractor to replace such non-conforming materials or re-execute such non-conforming work.

B. Correction of Work after Final Payment:

1. Neither the final certificate, nor payment, nor any provision in the Contract Documents shall relieve the Contractor of responsibility for faulty and/or non-conforming materials or workmanship and unless otherwise specified, he/she shall remedy any defects due thereto and pay for any damage to other work resulting there-from, which shall appear within a period of one (1) year from the date of final acceptance. CITY shall give notice of observed defects with reasonable promptness.

C. Deductions for Uncorrected Work:

If the Engineer and CITY deem it inexpedient to correct work injured or done not in accordance with the Agreement, an equitable deduction from the agreement price and/or extended warranty shall be made therefore.

GC-33. SUBSTITUTES CLAUSE

A. In order to establish a basis or quality, certain processes, types of machinery and equipment, kinds of material, may be specified on the plans or herein, by designating a manufacturer by name and referring to his/her brand or product designation. It is not the intent of these specifications to exclude other processes, equipment or materials or a type and quality equal to those designated.

B. The materials, products and equipment described in the bidding documents establish a standard or required function, dimension, appearance and quality to be met by any proposed substitution.

C. Approval of alternate and equal specified equipment and material will be only by addenda issued by the Engineer at least five (5) days prior to bid opening. Requests for approval of alternate equipment and materials manufacturers must come from the manufacturer or bidder at least ten (10) days prior to bid opening. All such requests must be accompanied by drawings and specifications in sufficient detail to allow the Engineer to determine whether or not the equipment and materials proposed is equal to that specified. The determination as to whether or not the proposed substitute equals that specified, shall rest solely with the City, based upon the opinion of the Engineer. The burden of proof of the merit of the proposed substitute shall be upon the proposer.

D. No extra compensation will be allowed the Contractor for any changes required to adopt the substitute equipment; therefore, the Contractor's proposal, including the approved

alternate, shall include all costs for any modifications to the plans such as structural and foundation changes, additional piping or changes in piping, electrical changes, or any other modifications which may be necessary or required for approval and adoption of the proposed alternate equipment.

GC-34. DETAILED BREAKDOWN OF CONTRACT PRICE

A. The Contractor shall, within ten (10) days after receipt of the notice to proceed, submit a complete breakdown of all lump sum bid items showing the value assigned to each part of the work, including an allowance for profit and overhead. Upon acceptance of the breakdown of the contract price by the Engineer, it shall be used as the basis for all requests for payment.

GC-35. CONTRACTOR'S RESPONSIBILITY FOR UTILITY PROPERTIES AND SERVICE

A. Certain utilities and structures which are expected to be adjacent to or encountered in the work are shown on the plans. It is known that there are discrepancies and omissions in the locations and quantities of existing utilities and structures shown. Those shown are for the convenience of the Contractor only, and no responsibility is assumed by either the City or the Engineer for their accuracy or completeness.

B. It is the Contractor's responsibility to notify "CALL BEFORE YOU DIG" at nationwide #811 prior to excavating and to comply with Idaho Code Section 55-2207 and all other applicable laws and regulations regarding the protection of underground utilities.

C. At points where the Contractor's operations could cause damage which might result in considerable expense, loss, and inconvenience when his/her operations are adjacent to or near a railway, telephone, television, power, oil, gas, water, sewer, irrigation, or other private or municipal systems, the operations shall be suspended until all arrangements necessary for the protection thereof have been made by the Contractor.

D. The Contractor shall notify all utility offices which are affected by the construction operation at least forty-eight (48) hours in advance of such construction. Under no circumstances shall the Contractor expose any utility without first requesting permission from and being granted to do so from the affected agency. Once permission has been granted, Contractor shall locate, if necessary, and expose all existing underground utilities in advance of any trenching operation. Hand digging shall be required within twenty-four (24) inches of a marked utility.

E. The Contractor shall protect all other poles from damage. If interfering power poles, telephone poles, guy wires, or anchors are encountered, Contractor shall notify the Engineer and the affected utility company at least forty-eight (48) hours in advance of construction operations to permit the necessary arrangements to be made with the affected utility company for protection or relocation of the interfering structure.

F. The Contractor shall be solely and directly responsible to the CITY and operators of such properties for any damage, injury, expense, loss, inconvenience, delay, suits, actions, or claims, of any character brought because of any injuries or damage which may result from the carrying out of the work to be done under the Agreement. Contractor shall hold harmless, indemnify and defend CITY from any such claims.

G. In the event of interruption to domestic water, sewer, storm drain, or to other utility services as a result of accidental breakage, or as a result of being exposed or unsupported, the Contractor shall promptly notify the proper authority. After such notification, the Contractor shall cooperate with said authority in restoration of service as promptly as

possible and the Contractor shall bear all costs of repair. In no case shall interruption of any water or utility service be allowed to exist beyond working hours unless prior approval is received from the Engineer.

H. In the event the Contractor encounters utility lines that interfere with trenching, the Contractor may, by obtaining prior written approval of the appropriate utility company, cut the service, dig through and restore the service with similar and equal materials at the Contractor's expense.

GC-36. STREET CLEANUP DURING CONSTRUCTION

A. The Contractor shall clean all spilled dirt, gravel, or other foreign material caused by the construction operations from all streets and roads at the conclusion of each day's work.

GC-37. CLEANUP

A. The Contractor shall at all times during the work keep the premises clean and orderly. He/she shall promptly remove all waste materials and rubbish. All directions from the Engineer and all authorized public officials having jurisdiction over health and safety shall be obeyed.

GC-38. PROOF OF TAX PAYMENT

A. The Contractor shall, within ten (10) days after receipt of the Notice of Award, furnish the Idaho State Tax Commission with a completed State of Idaho Form WH-5, PUBLIC WORKS CONTRACT REPORT (http://tax.idaho.gov/forms/ EFO00168_04-28-2011.pdf). Copies of the form may be obtained from CITY, or from the Idaho State Tax Commission.

B. The Contractor shall furnish evidence that he/she has paid all state and local taxes which have become due and payable and that he/she has secured payment of state and local taxes which have accrued, but which are not due. CITY shall not make final payment to Contractor until a tax release (http://tax.idaho.gov/forms/EFO00234_04-27-2011.pdf) from the Idaho State Tax Commission has been received by CITY.

GC-39. HOLD HARMLESS REQUIREMENT

A. In addition to other rights granted CITY by the Contract Documents, the Contractor shall indemnify and save harmless CITY, its officers and employees, from all suits, actions, or claims of any character brought because of any injuries or damages received or sustained by any person, persons, or property on account of the operations of the Contractor or his/her subcontractors; or on account of or in consequence of any neglect in safeguarding the work; or through use of unacceptable materials in constructing the work; or because of any act or omission, neglect, or misconduct of the Contractor or his/her subcontractors; or because of any claims or amounts recovered from any infringements of patent, trademark or copyright; or from any claims or amounts arising or recovered under the Workmen's Compensation Act or any other law, ordinance, order or decree.

GC-40. JURISDICTION AND DISPUTE RESOLUTION

A. Either CITY, or Contractor, may request mediation of any Claim submitted to Engineer for a decision before such decision becomes final and binding. A mediator with a background in construction litigation shall be selected by mutual agreement. In the event the parties cannot mutually agree upon a mediator, the Trial Court Administrator for the Second Judicial District shall submit a list of three (3) mediators to the parties. Each party will be

allowed to strike one (1) of the listed mediators, Contractor proceeding first and CITY second. The remaining person shall then be the mediator. Costs of the mediation shall be borne equally by the parties.

B. CITY and Contractor shall participate in the mediation process in good faith. The process shall be concluded within sixty (60) days of filing of the request.

C. If the Claim is not resolved by mediation, Engineer's action or denial shall become final and binding thirty (30) days after termination of the mediation unless, within that time period, CITY or Contractor:

1. agrees with the other party to submit the Claim to another dispute resolution process; or

2. gives written notice to the other party of the intent of file an action in the Second Judicial District of the State of Idaho which court, the parties agree, is the court with jurisdiction to hear the dispute. The action must then be filed not later than sixty (60) days after substantial completion of the Project.

GC-41. PERMITS AND LICENSES

A. The Contractor shall obtain and pay for all permits and licenses, including but not limited to the following:

B. Those required by the Moscow City Code, such as:

Community Forestry Ordinance	§5-8-1 et seq.
Building Code	§7-1-1 et seq.
Plumbing Code	§7-1-2 et seq.
Electrical Code	§7-1-3 et seq.
Gas Code	§7-1-4 et seq.
Contractor Licensing Ordinance	§7-16-1 et seq.

C. Those required by the Idaho Code or other State Law.

D. Those required by the Code of Federal Regulations or other Federal Law.

GC-42. ENVIRONMENTAL MATTERS

A. Contractor shall comply with all statutes and regulations regarding environmental matters, including, but not limited to, matters of health, safety, exposure, disposal, reporting, mitigation, etc.

GC-43. NO THIRD PARTY BENEFICIARIES

A. No claim as a third party beneficiary under this Agreement by any person other than Contractor shall be made or shall be valid against CITY, and CITY shall not be liable for or be held to pay any money to such person.

GC-44. COMPLIANCE WITH GRANT CONDITIONS

A. Contractor shall comply with all conditions of, and all laws applicable to, and all policies, practices and procedures of the City applicable to, any federal, state or local grant received by the City or Contractor at any time with respect to this contract or with respect to the provision, performance or completion of the work.

ENGINEERING SPECIFICATIONS

ES-1. SCOPE OF WORK

The scope of work for the project is as set forth in the project specific plans and specifications.

The intent of the contract is to provide for the construction and completion in every detail of the work described.

The City reserves the right to make, at any time during the progress of the work, such changes in quantities and such alterations in the scope of work as are necessary to satisfactorily complete the project and the Contractor shall perform the work as altered. Compensation for change in scope of work will be in accordance with the project specific contract documents.

Unless otherwise noted, all labor, materials, and equipment necessary for the execution and completion of the work shall be furnished by the Contractor.

ES-2. TRAFFIC CONTROL/R.O.W USE PERMITS

2.1 Traffic Control

A. The Contractor shall obey all rules, laws, ordinances and regulations of all traffic regulatory authorities having jurisdiction regarding the closing or barricading of public streets. Work shall not begin until the proper permits have been acquired and all required traffic control devices are in place.

B. **Prior to commencement of work, the Contractor shall submit to the Engineer for review, Traffic Control Plan(s) created by an *ATSSA or ESC certified Traffic Control Supervisor.* The plan shall be consistent with requirements detailed in the current edition of the Manual on Uniform Traffic Control Devices (MUTCD) and shall include identification of detour routes for pedestrians. All traffic control devices shall be MUTCD approved, and installed and maintained by *ATSSA or ESC certified Traffic Control Technicians*. In the event where flagging is required to control traffic flow around a work zone, all flaggers shall have a *current ATSSA or ESC flagging card.***

Traffic control plans for work within State of Idaho highway right-of-way must also be approved by the Idaho Transportation Department.

C. The work shall be carried out so as to cause a minimum of dislocation of normal commercial pursuits. Traffic must be kept open on roads and/or streets where no detour is possible. The Contractor shall, in addition to other requirements contained herein, without further notification or other order, provide, erect, and maintain at all times during the progress or temporary suspension of the work, barricades, fences, signs, flaggers, or other protection in accordance with the most current edition of the "Manual on Uniform Traffic Control Devices" and shall provide, keep, and maintain such danger lights, signals, and flaggers, as may be necessary or ordered by the Engineer and/or traffic regulatory authorities having jurisdiction to ensure the safety of the public as well as

those engaged in connection with the work. All barricades and obstructions shall be protected by signal lights which shall be suitably distributed across and along the roadway and which shall be kept burning from one hour before sunset until one hour after sunrise and at other times as vision is obscured by fog, smoke, or dust.

D. The Contractor shall promptly reopen streets and driveways to the public after construction work requiring their closure is completed, and all safety issues have been resolved. Local traffic shall be provided access to private properties at all times, except during necessary stages of construction when it is impractical to carry on the construction and maintain traffic simultaneously, such as for the placing of hot mix asphalt pavement, placing and curing of Portland cement pavement, and deep sewer excavation which prohibits safe travel of vehicular traffic. No private driveway may be closed except as provided here-in, or unless permission is given the Contractor by the owner of the property affected. Emergency traffic such as police, fire, and disaster units shall be provided reasonable access at all times. The Contractor shall be solely responsible for any damages which may result from failure to provide such reasonable access.

E. The Contractor shall take every precaution to protect pedestrian, bicycle and vehicular traffic. Whenever, in the opinion of the Engineer, the Contractor has not provided sufficient or proper safety precautions and safeguards, he/she shall do so immediately, and to whatever extent the Engineer directs at no additional cost to the City. Should the City Engineer deem it necessary to augment the traffic control devices and the Contractor be unresponsive or unwilling to do so, the Contractor will be charged the customary rental rate and force account charges for the required personnel to bring the site into compliance with the MUTCD.

2.2 Right of Way Use Permits

A. All street and sidewalk closures require a City issued Street Closure Permit.

B. Work within public right of way requires a City issued Right of Way use permit.

C. Work within State of Idaho highway right-of-way requires an Idaho Transportation Department (ITD) permit. These permits must be obtained through the City; not directly from ITD.

2.3 Payment: Traffic Control

Traffic control will be paid for as incidental to other bid items if there is no specific bid item for traffic control included in the proposal; OR, as a lump sum amount if traffic control is included as a separate pay item in the proposal. Lump Sum price for traffic control includes furnishing, installing and maintaining the required devices to comply with MUTCD requirements.

ES-3. MATERIALS

All materials shall be new, free of defects and shall be furnished and installed according to the manufacturer's specifications.

ES-4. REMOVALS AND DISPOSALS

The Contractor shall be responsible for all removals indicated on the Plans and in the Specifications, and as may be necessary to complete the work in accordance with the true intent and meaning of the drawings and the details.

The Contractor shall patch, repair, and/or replace all existing work immediately adjacent to the newly constructed areas, or where removals are made, so that such adjacent work is left in the same state as their original condition. Such applications specifically shall apply to private driveways with the intent that all such driveways will be left with a smooth consistent and constant grade constructed of the same material and to the same specifications as originally used in constructing the driveway.

When salvageable material is to remain Contracting Agency property, the Specifications will identify the material and describe how the Contractor shall remove it and where it will be stored.
Any material not named in the Specifications as Contracting Agency property will become the property of the Contractor and shall be removed from the project.

The Contractor may dispose of waste material in Contracting Agency-owned sites if the Specifications or the Engineer permits it. Otherwise, the Contractor shall arrange to dispose of waste at no expense to the Contracting Agency.

The Contractor shall acquire all permits and approvals required for the use of the disposal site. The cost of any such permits and approvals shall be included in the Bid prices for other Work.

The Contractor shall provide the Engineer the location of all disposal sites to be used and also provide copies of the permits and approvals for such disposal sites before any waste is hauled off the project.

The Contractor shall protect, indemnify, and save harmless the Contracting Agency from any damages that may arise from the Contractor's activities in making these arrangements. Any action required to satisfy any permit and/or any approval requirements in a Contractor-provided disposal site shall be performed by the Contractor at no additional expense to the Contracting Agency.

Removals and disposals will be paid by lump sum or unit price:

The price shall include all costs incurred to remove and dispose of the items bid including labor and equipment and other incidental costs.

ES-5. EARTHWORK

5.1 Excavation

All excavation shall be unclassified, except that which is required for the installation of pipe (storm, sanitary, water, drain), which is classified as trench excavation.

This work shall consist of excavation and disposal of all material, not being removed under some other item, which is encountered within the limits of the work necessary for the construction in accordance with the Specifications and in reasonable close conformity with the lines, grades, or thicknesses shown on the plans, or established by the Engineer.

This work shall include all excavation performed under this item regardless of the material encountered.

This work shall include the removal and disposal of any structure or any miscellaneous obstructions which are visible or are indicated on the plans which encroach upon or otherwise obstruct the work and for which a separate bid is not taken.

This work shall also include the preparation of the subgrade when the subgrade is not on a fill section. Subgrade elevation shall be below the gravel base elevation of pavement as indicated on the plans, and shall conform to the crown of the finished pavement surface. All depressions or ruts containing water shall be drained, as arranged with the Engineer. The entire surface shall be bladed to remove inequalities and secure a uniform surface. Line and grade stakes will be provided once by the Engineer, or his/her representative. The Engineer, or his/her representative, will set one set of stakes at fifty (50) foot intervals and at closer intervals where necessary. The subgrade shall be brought to a firm unyielding surface, true to line, grade, and cross section, by rolling and processing with equipment generally used for this purpose and acceptable to the Engineer. All soft, spongy, or yielding spots, which may be ordered to be removed by the Engineer, shall be entirely removed and replaced with geotextile and suitable rock material and thoroughly compacted to the satisfaction of the Engineer.

5.2 Structural Fill

This work shall consist of furnishing and placing selected material in one or more courses to form a stable roadbed in accordance with these specifications and in conformity with the Plans.

Structural fill (also 'Borrow' or 'Embankment') may consist of naturally occurring sand, sand gravel, sand and rock mixtures, decomposed granites, and native loess or clays. Sand and rock mixtures shall contain sufficient sand to fill the voids of the larger gravel and stone to permit the required compaction. All borrow must be obtained from designated or approved sources. Structural fill shall be free of roots, bark, topsoils or other organic materials.

The surface upon which the structural fill is to be placed shall conform to the established lines and grades and shall be smooth and uniform, having been cleared of all vegetation, roots, stumps, topsoil, and foreign material.

The Contractor shall use necessary precautions in loading borrow to assure reasonable uniformity in grading.

Borrow shall be compacted with modern, efficient, compacting equipment satisfactory to the Engineer.

Embankment shall be placed in successive horizontal layers not exceeding eight (8) inches in loose thickness. All embankment shall be compacted to at least ninety-five (95) percent of the maximum density in accordance with AASHTO T-99. At all locations that are inaccessible to a roller, the embankment shall be brought up in horizontal layers and compacted thoroughly with mechanical tampers. The horizontal layers shall not exceed eight (8) inches in loose thickness. The compacting equipment may be of any type provided they are capable of compacting each lift of the material to the specified density.

5.3 Payment

The accepted quantities of EXCAVATION will be paid for by the per cubic yard unit price or by lump sum. The quantity of excavation, as listed on the proposal or measured in the field, shall be used to compute the final payment, exclusive of any extra work ordered by the Owner or his/her representatives, as provided under Section GC-11, Extra Work.

The accepted quantities of STRUCTURAL FILL will be paid for by per cubic yard unit price or by lump sum. The unit price per cubic yard shall include all materials, labor, equipment and other costs incidental to furnishing and placing the borrow as herein specified and as shown on the plans.

ES-6. SUBGRADE SEPARATION GEOTEXTILES

6.1 Materials

Geotextile shall be Type II, nonwoven or woven, as set forth in **Section 718.07 – Subgrade Separation Geotextile Property Requirements** of the latest edition of the Idaho Transportation Department's Standard Specifications for Highway Construction.

6.2 Construction Requirements

Geotextile shall be furnished and installed in accordance with **Section 640 – Construction Geotextiles** of the latest edition of the Idaho Transportation Department's Standard Specifications for Highway Construction.

6.3 Payment

Geotextile will be paid for on the basis of unit price, per square yard, furnished and installed.

ES-7. CRUSHED ROCK BASE

7.1 Description

This work shall consist of furnishing and placing one or more courses of aggregate on a prepared surface in accordance with these Specifications and in reasonable close conformity with the lines, grades, thicknesses and typical sections shown on the Plans and/or established by the Engineer.

The Contractor shall make their own arrangements for obtaining crushed rock base material and shall designate the source of same in ample time to permit sampling and testing by the Engineer.

7.2 Aggregate

A. 3/4" (-) Aggregate shall conform to the following gradation:

Sieve Size	Percent Passing

1 inch	100
¾ inch	90 – 100
No. 4	40 – 65
No. 8	30 – 50
No. 200	3 – 9

The sand equivalent shall not be less than 30 if 5 percent or more of the material passes the No. 200 sieve. Sand equivalent will not be required if less than 5 percent passes the No. 200 sieve.

B. 1-1/4" (-) Aggregate shall conform to the following gradation:

Sieve Size	Percent Passing
1-1/2 inch	100
1 inch	90 – 100
½ inch	60 – 80
No. 4	35 – 60
No. 8	25 – 50
No. 30	10 – 30
No. 200	2 – 9

The sand equivalent shall not be less than 30 if 5 percent or more of the material passes the No. 200 sieve. Sand equivalent will not be required if less than 5 percent passes the No. 200 sieve.

7.3 Test Methods

Tests shall be made in accordance with the following applicable standard methods:

Field determination of density of soil in-place and percent compaction.	Idaho T-74
Compaction standard for coarse granular materials by use of the vibratory spring-loaded compactor.	Idaho T-74
Moisture density relations using a 5.5 lb. rammer and 18-inch drop, method A or C.	AASHTO T-99
Nuclear method for the determination of percent compaction in place density and moisture content of soils and aggregates.	WAQTC TM7

7.4 Placing

Prior to placing base rock, the excavated subgrade will be graded smooth and compacted to the satisfaction of the Engineer. Geotextile fabric shall then be placed upon the full width of the compacted subgrade. The geotextile fabric shall be as specified in Specification ES-6 SUBGRADE SEPARATION GEOTEXTILES. Joints between sections of fabric shall overlap a minimum of 2 feet along longitudinal joints and a minimum of 6 feet at end joints.

If the required compacted depth of the base course exceeds 8.0 inches, the base shall be constructed in two or more layers of approximate equal thickness.

7.5 Mixing

Unless otherwise specified, the Contractor shall mix the base course by any one or a combination of the three methods specified below:

Stationary Plant Method. The aggregate and water shall be mixed in an approved mixer. Water shall be added during the mixing operation in an amount necessary to facilitate compaction. After mixing, the base material shall be placed on the roadbed by means of an approved aggregate spreader.

Travel Plant Method. After the material for each layer of base course has been placed through an aggregate spreader or windrow sizing device, the base shall be uniformly mixed by a traveling mixing plant. During the mixing, water shall be added in an amount necessary to facilitate compacting.

Road Mix Method. After material for each layer of base course has been placed, the materials shall be mixed by motor graders or other approved equipment until the mixture is uniform throughout. During the mixing, water shall be added in an amount necessary to facilitate compaction.

7.6 Shaping and Compaction

After each layer has been spread it shall be compacted for its full width. The choice of compaction equipment will be left to the Contractor. Compaction shall continue until not less than 95% of the standard density is attained as determined by AASHTO T-99.

At the request of the Contractor, the Engineer, or his/her representative, will set one set of stakes at fifty (50) foot intervals and at closer intervals where necessary.

All soft, spongy, or yielding spots, which may be ordered repaired by the Engineer, shall be repaired in accordance with Specification ES-8 SOFT SPOT REPAIR.

7.7 Payment

The accepted quantities of CRUSHED ROCK BASE will be paid for by the unit price per ton. The unit price per ton shall include all materials, labor, equipment and other costs incidental to furnishing and placing the crushed rock, as herein specified and as shown on the plans.

Weight slips, in duplicate form, shall accompany each load of crushed rock to the construction site. Upon delivery of the material, one copy of the weight slip will be given to the Engineer, or his representative, and one copy will remain with the truck driver, before the material is unloaded. Under no conditions will any weight slips be accepted by the Engineer, or his representative, after the material is unloaded from the vehicle. It shall be the responsibility of the Contractor to give the Engineer ample

advance notice of the time when such material shall arrive at the job site, in order to assure the presence of the Engineer, or his representative, at the job site during delivery of the material. The weight slips will be the only basis of determination of pay quantity for this item.

ES-8. SOFT SPOT REPAIR

8.1 Materials

Geotextile shall be Type II, nonwoven or woven as per Specification ES-6 SUBGRADE SEPARATION GEOTEXTILES. Crushed Rock Base shall be 1-1/4"(-) crushed basalt per Specification ES-7 CRUSHED ROCK BASE.

8.2 Construction Requirements

All soft spots in the subgrade shall be called to the attention of the Inspector prior to placing the geotextile fabric. The Inspector shall determine where additional excavation is necessary and instruct the Contractor on such over excavation.

All soft, spongy, pumping or yielding areas will be ordered by Engineer to be repaired as herein described:

1. Remove subgrade to a depth of one foot below design subgrade elevation.
2. Add Subgrade Separation Geotextile to the bottom of the excavated area. This layer of geotextile will be in addition to that required for the entire subgrade area.
3. Backfill the area with Crushed Rock Base (95% min. compaction) to subgrade design elevation.

Dispose of the excavated material per Specification ES-4 REMOVALS AND DISPOSALS.

The Contractor shall cooperate with the City in determining the areas that require Soft Spot Repair by furnishing a loaded dump truck and operator to roll over the entire subgrade area and, with the assistance of a City representative, locate and mark all soft spots.

8.3 Payment

SOFT SPOT REPAIR will be paid for on the basis of unit price, per square yard, complete, in-place; including excavation, base aggregate and geotextile.

The Engineer may determine that excavation in excess of the one-foot depth may be required to accomplish the repair; in such instances compensation will be adjusted proportionately.

ES-9. WATERING

Bulk water furnished to contractors for the construction of City funded projects will be provided at NO cost to the contractor. Bulk water furnished to contractors for purposes other than the construction of City funded projects must be purchased from the City. All bulk water use by contractors will be metered and paid for under rates and fees established by the City's most current adopted fee schedule and pursuant to City Code.

ALL BULK WATER WILL BE FURNISHED IN ACCORDANCE WITH THE CITY OF MOSCOW'S 'BULK WATER USE POLICY'.

Contractors shall coordinate ALL water usage with the Moscow Water Department.

ES-10. WEIGHING

Weighing equipment for the weighing of crushed stone surfacing materials, bituminous construction, etc., shall consist of and conform to Section 109, of the latest edition, of the Idaho Transportation Departments Standard Specifications for Highway Construction, and amendments thereto. In any event, the scales shall be tested and sealed, at the expense of the Contractor, as set forth in the Standard Specifications listed above. Weight slips in duplicate form shall accompany each load of crushed rock or asphalt to the construction site.

ES-11. CONCRETE

11.1 General

Portland cement concrete shall conform to Section 502 of the latest edition of the Idaho Transportation Department Standard Specifications for Highway Construction, and amendments thereto, and as follows:

Portland cement concrete shall be composed of Portland cement, fine aggregate, coarse aggregate and water, proportioned and mixed in accordance with these specifications. Unless otherwise provided, the Portland cement concrete shall be Idaho Transportation Department Class 40B having a minimum unit compressive strength at 28 days age of 4,000 psi. Class 40B concrete shall have 6 sacks of cement per cubic yard of concrete and an air entrainment content of 6.5 percent, plus or minus 1.5 percent. The slump shall be a maximum of five (5) inches and shall not vary more than one (1) inch from the average.

11.2 Portland Cement

Portland cement shall conform to AASHTO M-85, Type I or II and shall contain no more than 0.60 percent total alkali. Type III can be used with prior approval of the Engineer.

Unless otherwise permitted, the product of only one mill or any one brand and type of Portland cement shall be used on any single pour.

11.3 Aggregates

Aggregates shall be reasonably free from wood, roots, bark, soft or disintegrated pieces, or other deleterious matter. Blend sand may be approved for use to correct deficiencies in the grading sizes, provided the combination meets the specification requirements for the class of material being produced.

Fine aggregate for concrete shall conform to the following gradation:

Sieve Size	Percent Passing
3/8 inch	100
No. 4	95 – 100

No. 16	45 – 80
No. 50	10 – 30
No. 100	2 – 10
No. 200	0 – 4

Sand equivalent shall be a minimum of 70.
Fineness modulus to be between 2.50 and 3.10 (AASHTO M-6).

The amount of deleterious substances shall not exceed the following limits:

	Percent by Weight Maximum
Clay lumps	1.0
Coal & lignite	1.0
Material to be reasonably free of shale, alkali, mica, coated grains, & soft flaky particles.	

Organic impurities shall not exceed those specified in AASHTO T-21. Mortar making properties shall conform to AASHTO T-71 or ASTM C87.

Coarse aggregate for concrete shall conform to the following gradations for coarse aggregate size No. 3:

Sieve Size	Percent Passing
1 1/2 inch	100
1 inch	95 – 100
1/2 inch	25 – 60
No. 4	0 – 10
No. 8	0 – 5

The amount of deleterious substances shall not exceed the following limits:

	Percent by Weight (Maximum)
Coal & lignite	1.0
Clay lumps	0.5
Material to be reasonably free of shale, alkali, mica, coated grains, & soft flaky particles.	

11.4 Water

Water for concrete shall be obtained from any source of potable water. Sources of non-potable water shall be approved before use.

11.5 Curing Compound

The curing compound shall be a liquid membrane-forming curing compound conforming to AASHTO M-148 Type I, with a fugitive dye and shall be applied to all finished concrete surfaces immediately after the concrete has set.

11.6 Air Entraining Admixture

Air entraining admixture shall conform to AASHTO M-154.

ES-12. CONCRETE CONSTRUCTION REQUIREMENTS

12.1 Mixing and Delivery

A. Concrete shall be mixed and delivered by means of any of the following:

1. Mixed complete in a stationary mixer and the mixed concrete transported to the point of delivery in agitating equipment or in non-agitating equipment when approved. (Known as central-mixed concrete.)

2. Mixed completely in a truck mixer at the batching plant or while in transit. (Known as transit mixed concrete.)

3. Mixed completely in a truck mixer at the point of delivery following the addition of mixing water. (Known as truck mixed concrete.)

4. Mix partially in a stationary mixer and the mixing completed in a truck mixer. (Known as shrink-mixed concrete.)

B. Truck mixers and truck agitators shall be operated within the rated capacity and at a speed of rotation for mixing or agitating as designated by the manufacturer of the equipment.

C. When a stationary mixer is used for the complete mixing of the concrete, the mixing time for mixers having a capacity of 10 cubic yards or less shall be 60 seconds minimum. For 10 or more yards capacity, the mixing time shall be approved. Mixing time shall be measured from the time all cement and aggregates are in the drum. The batch shall be so charged into the mixer that some water will enter in advance of cement and aggregates and all water shall be in the drum by the end of the first one-fourth (1/4) of the specified mixing time.

D. For shrink-mixed concrete, the mixing time in the stationary mixer may be reduced to a minimum of 30 seconds. Mixing shall be completed in a truck mixer by not less than 50 or more than 100 revolutions of the drum or blades at mixing speed. The batch volume shall not exceed 70 percent of the gross volume of the drum.

E. When a truck mixer is used for complete mixing each batch of concrete shall be mixed for not less than 70 nor more than 100 revolutions of the drum or blades at mixing speed. Additional mixing, if any, shall be at agitating speed.

F. When a truck mixer or agitator is used for transporting concrete that has been completely mixed in a stationary mixer, mixing during transport shall be at the agitating speed.

G. Unless otherwise approved, when a truck mixer or agitator is used for transporting concrete, the concrete shall be delivered to the site of the work and discharged completely within 1-1/2 hours or before the drum has been revolved 300 revolutions, whichever comes first, after the introduction of the cement to the aggregates. In hot weather or under conditions contributing to

quick stiffening of the concrete, a time less than 1-1/2 hours may be directed. When a truck mixer is used for the complete mixing of the concrete, the mixing operation shall begin within 30 minutes after the cement has been intermingled with the aggregates. If additional mixing water is required to replace evaporated mixing water to maintain the specified slump and is added with the permission of the Engineer, a minimum of 20 revolutions of the truck mixer drum at mixing speed shall be required before discharge of any concrete.

Tests for consistency may be made at approximately the beginning, the midpoint, and the end of the load. If the results vary by more than the tolerance specified below, the mixer or agitator shall not be used until the condition is corrected.

When Average Slump is	Tolerance
3 inches or less	1/2 inch
More than 3 inches	1 inch

H. Central mixing concrete may be transported in suitable non-agitating equipment. The bodies of such equipment shall be smooth, watertight metal containers.

12.2 Re-tempering

Concrete shall be mixed only in such quantities as are required for immediate use and shall be used while fresh before initial set has taken place. Any concrete having initial set before placing and finishing shall be wasted and not used for the work. No re-tempering of concrete (remixing with water or other materials) will be allowed, unless otherwise approved by the Engineer, and in no instance shall concrete be re-tempered at a rate in excess of 1 gallon of water per 1 cubic yard of concrete remaining in the truck.

12.3 Placing Concrete

General. Concrete shall not be placed until forms have been checked and approved by the Engineer. The forms shall be clean of all debris before concrete is placed. Concrete shall be placed so as to avoid segregation of the materials and the displacement of the reinforcement. Care shall be taken to fill each part of the form by depositing the concrete as near the final position as possible. After initial set of the concrete, the forms shall not be jarred and no strain shall be placed on the ends of projecting reinforcement.

12.4 Cold Weather Concreting

Heating and Placing Concrete. Before any concrete is placed, all snow and frost shall be completely removed. Concreting operations shall meet the following requirements when the ambient temperature falls below 40 degrees F.

To achieve adequate curing, the temperature of the concrete shall be maintained above 50°F during the entire curing period or 7 days, whichever is greater. The concrete temperature shall not be allowed to fall below 35°F during this time. Prior to placing concrete in cold weather, the Contractor shall provide a written procedure for cold weather concreting to the Engineer. The procedure shall detail how the Contractor will adequately cure the concrete and prevent the concrete temperature from falling below 35°F. Extra protection shall be provided for areas especially vulnerable to freezing (such as exposed top

surfaces, corners and edges, thin sections, and concrete placed into steel forms). Concrete placement will only be allowed if the Contractor's cold weather protection plan has been approved by the Engineer.

The Contractor shall furnish concrete that will have a temperature of at least 50 degrees F and not more than 80 degrees F at the time of placing. Heating equipment shall heat all the materials uniformly. Such heating shall prevent the occurrence of non-uniform moisture contents or contamination in the aggregates. Aggregates shall be heated in a manner such that frozen lumps, ice and snow are eliminated. The average temperature of an individual batch of aggregate shall not exceed 150 degrees F.

The Contractor is solely responsible for protecting concrete from inclement weather during the entire curing period. Permission given by the Engineer to place concrete during cold weather will in no way ensure acceptance of the Work by the Contracting Agency. Should the concrete placed under such conditions prove unsatisfactory in any way, the Engineer shall still have the right to reject the Work although the plan and the Work were carried out with the Engineer's permission.

12.5 Placing in Hot Weather

The temperature of the concrete shall not exceed 80 degrees F at the time of placement. When the combination of ambient air temperature, concrete temperature, humidity and wind is such that rapid evaporation of moisture from the concrete surface will take place, the Contractor shall take measures to slow the evaporation to tolerable limits. Such measures may include, but not limited to, erecting sun shades or placing at night or early morning. Ice may be used as a part of the mixing water providing it has completely melted by the time mixing is completed.

12.6 Finishing Concrete

If, in the judgment of the Engineer, rock pockets are of such extent or character as to materially affect the strength of the structure or to endanger the life of the steel reinforcement, he may declare the concrete defective and require the removal and replacement of that portion of the structure affected. All holes and depressions shall be cleaned, thoroughly wetted, and filled with cement mortar composed of one part of cement to two parts of sand. All fins caused by form joints and other projections shall be removed above ground line. The resulting surfaces shall be reasonably smooth and uniform in texture and color. After the concrete is placed, it shall be struck off with a template or a vibrating screen. Concrete shall be finished to an even surface by means of both longitudinal and transverse floats. The use of power trowels will not be permitted.

When concrete sidewalk has hardened sufficiently the surface shall be given a broom finish. The broom shall be of an approved type. The stroke shall be perpendicular to the centerline with adjacent strokes, slightly overlapped. The finish shall be free from porous spots, irregularities, depressions, small pockets or rough spots.

12.7 Curing Concrete

Concrete surfaces shall be kept completely and continuously moist until a curing method is applied. Curing compound shall not be applied to concrete surfaces before the finishing has been acceptably completed and shall not be applied to construction joints or to the inside faces of joints to be sealed with silicone joint sealer. The curing compound shall not be applied during rainfall.

Prior to completion of the curing period, if any membrane surface is marred or damaged by scuffing and wear, the Engineer may require an immediate application of the same type membrane or water cure for the remainder of the cure period.

Membrane forming curing compounds shall be thoroughly mixed before use and agitated during application to prevent settling of the suspended solids. The membrane must be uniformly applied.

Membrane forming curing compounds shall be applied to the finished concrete immediately after the bleed water or free-water sheen leaves the surface of the finished concrete surface.

The curing compound shall be a liquid membrane curing compound conforming to AASHTO M-148 Type I. Curing compound shall be applied under pressure, at the rate of application as directed, and shall be at least 1 gallon per 200 square feet for each application. All concrete cured by this method shall receive two applications of the curing compound for a total minimum coverage of 1 gallon per 100 square feet. The first coat shall be applied immediately after stripping the forms and/or acceptance of the concrete finish. If the surface under the forms has dried the concrete shall be thoroughly wet with water and the curing compound applied just as the surface film of water disappears. The second application shall be applied after the first application has set. During curing operations all unsprayed exposed surfaces shall be kept wet with water.

Should the film become damaged from any cause, within 10 days, the damaged portion shall be repaired immediately with additional compound.

If this curing compound is applied to construction joints, it shall be removed by sandblasting before fresh concrete is placed against them.

All membrane forming curing compounds shall be accompanied by a Manufacturer's Certificate of Compliance and shall be approved by the Engineer, prior to its use.

12.8 Correction of Work After Completion of Construction – Two Year Warranty

The contractor/person installing the concrete shall be responsible for faulty and/or non-conforming materials or workmanship for a period of two (2) years from the date of the initial installation; he/she shall remedy any defects due thereto. The City shall give notice of observed defects with reasonable promptness.

Surface scaling (or spalling) of the new concrete surface will be the fundamental consideration for determining non-conforming workmanship and materials requiring remediation. Scaled surfaces exceeding 5% (randomly dispersed or concentrated) per twenty (20) square feet of concrete surfacing area will be considered defective and shall be replaced. Manner and method as well as configuration of the area requiring replacement will be as directed and approved by the City Engineer. All replacement of concrete shall be as per City standards and at the Contractor's expense.

ES-13. CONCRETE CURB

13.1 General

All concrete curb shall conform to the City of Moscow Standard Drawings, the Plans, and Specifications. Concrete for curbs shall conform to the requirements of ES-11 CONCRETE and ES-12 CONCRETE CONSTRUCTION REQUIREMENTS of these specifications.

13.2 Forms

Curb forms shall be set to line and grade as designated; securely staked, and so constructed as to result in finished lines true to the dimensions and shapes shown on the plans.

Forms shall be of wood or metal, straight and free from warp, and of sufficient strength to resist springing while placing concrete. Where a section must be constructed on a curve, straight lengths of the section shall be short enough that the middle ordinate to the curve, from the face of that section, does not exceed one-half (1/2) inch or the section shall be continuously curved.

13.3 Joints

Expansion joints (or thru joints) shall be provided at intervals of forty-eight (48) feet throughout the length of the curb and at the junction of straight curb and radii and at either end of a driveway or alley section. Pre-formed joint fillers of one-half (1/2) inch or three-eighths (3/8) inch thickness will be placed in expansion joints.

Contraction joints (or "Dummy Joints") shall be constructed every sixteen (16) feet. These joints shall be 1/8-inch minimum thickness and constructed to a minimum depth of 1-1/2 inches by scoring with a tool which will leave the corners rounded and destroy aggregate interlock.

13.4 Construction Requirements

A. Dimensions. All curbs, unless otherwise specified, shall be in accordance with dimensions conforming to one of the types shown on City of Moscow Standard Drawings as specified by the approved project plans.

B. Consistency. All Class A curb (cast in place) shall be of good plastic consistency and shall have a slump of three (3) inches and shall be tested by the Engineer according to the provisions of AASHTO T-119.

   All Class C curb (extruded) shall meet the requirements for Class A curb, except for the amount of slump which may vary according to the conditions of the concrete mix and the extrusion equipment used. Under no circumstances however, shall the finished curb vary more than one-half (1/2) inch from the design elevation, and not more than ten (10) percent from the dimensions shown in the City of Moscow Standard Drawings and Specifications. Class C curbs will not require expansion joints.

13.5 Finishing

While the concrete is still green, the top and front face, or other exposed portions of the curb, shall be troweled to produce a uniform even surface then given a fine brush finish with brush strokes parallel to

the long axis of the curb. Form marks and other irregularities shall be removed. The edges of the curb shall be rounded with an edger. Honeycombed areas in the back of the curb that, in the opinion of the Engineer, are not detrimental to the curb, need not be patched.

13.6 Curing

Immediately after finishing, the concrete shall be cured in accordance with the requirements of ES-12.7, Curing Concrete.

13.7 Backfilling

All curb shall be backfilled as described herein. If sidewalk or concrete pavers are to be constructed behind the curb, all backfill material shall be 3/4" minus crushed aggregate. If the area behind the curb is to be lawn or planted area, the top 16 inches shall be topsoil. All denuded areas shall be fertilized, re-sown with grass seed and covered with mulch as specified in Sections ES-27 and ES-28.

13.8 Payment

The accepted quantities of curb will be paid for by the unit price per linear foot. Compacted aggregate base under the curb and curb and gutter pan at catch basin locations will be considered incidental to the unit price for the curb. The unit price per linear foot shall include all materials, labor, equipment and other costs incidental to constructing concrete curb as herein specified and as shown on the Plans and special drawings.

ES-14. CONCRETE SIDEWALK

14.1 General

All concrete sidewalk, including driveways, shall conform to the City of Moscow Standard Drawings, Contract Plans, and Specifications. Concrete for sidewalks shall conform to the requirements of ES-11 CONCRETE and ES-12 CONCRETE CONSTRUCTION REQUIREMENTS of these specifications.

14.2 Gravel Base

Sidewalk shall be constructed on a compacted base of (3/4) inch minus crushed rock; base aggregate shall be placed on compacted, non-pumping subgrade. The crushed rock shall have the following gradation:

Sieve Size	Percent Passing
1 inch	100
3/4 inch	90 – 100
No. 4	40 – 65
No. 8	30 – 50
No. 200	3 – 9

The sand equivalent shall not be less than 30 if 5 percent or more of the material passes the No. 200 sieve. Sand equivalent will not be required if less than 5 percent passes the No. 200 sieve.

The total thickness of the gravel base shall be at least six (6) inches, compacted, in-place.

The gravel base shall be graded, rolled, tamped, or otherwise compacted to ninety-five (95) percent of the maximum density determined in accordance with AASHTO T-99.

The gravel base shall be thoroughly sprinkled with water before the concrete is placed.

All cost for furnishing and placing gravel base for sidewalks shall be included in the unit price bid on the bid proposal form for constructing concrete sidewalks. No additional compensation will be made for this gravel base.

14.3 Construction Requirements

A. Dimensions. Sidewalk width, thickness, and reinforcement shall be as shown on the City of Moscow Standard Drawings.

Sidewalk shall have a cross slope of between 1% and 2%, unless otherwise approved by the Engineer.

B. Forms. Side forms shall be rigid and shall bear full length on the compacted gravel base and shall be the full depth of the finished walk. Forms shall be well staked, braced or otherwise rigidly held to true line and grade and shall rest upon stakes driven into the ground at intervals sufficient to provide rigid support. If metal forms are used they shall be of a type satisfactory to the Engineer.

C. Placing and Finishing Concrete. SLUMP SHALL NOT EXCEED FIVE (5) INCHES. The concrete shall be spread uniformly between the forms and thoroughly consolidated and leveled with an approved strikeboard. Expansion joints of premolded joint material one-half (1/2) inch thick or three-eighths (3/8) inch thick may be constructed through the sidewalk at intervals of twenty (20) feet. Expansion joints may also be located where new sidewalk meets existing concrete, unless otherwise approved by the Engineer. Where applicable, joints in sidewalks and curb shall coincide.

After the concrete has been thoroughly consolidated and leveled it shall be bullfloated to eliminate high and low spots and to embed large aggregate. The concrete shall then be allowed to harden properly before jointing, edging, and brooming is completed.

Contraction joints shall be tooled into the concrete every four feet for four-foot wide sidewalk and five feet for five-foot wide sidewalk, shall be 3/8 inch minimum in depth, and shall be perpendicular to the direction of the walk. All joints shall then be edged with a 3/8-inch radius edger and the sidewalk edges shall be tooled with a one-half (1/2) inch radius edger.

After edging and jointing has been completed the concrete shall be smoothed with wood or metal hand floats. The floated surface shall then be coarse broomed uniformly in a transverse direction with a fiber hair brush or an approved type.

The placing and furnishing of all sidewalk shall be performed under the control of the Engineer, or his/her representative, and the tools shall meet with his/her approval.

The contractor shall keep a person at the job site for a minimum of four hours following the concrete surface brooming operation for the purpose of both preventing and repairing any damaged surfacing to the newly placed concrete. Concrete left unattended, if damaged or defaced shall be replaced at contractor expense.

D. Curing. Curing shall be performed by applying a sealing compound conforming to AASHO M-148 Type I to the surface of the concrete immediately after it has set sufficiently to permit such application. Curing shall conform to Section ES-12.7, Curing Concrete.

E. Backfill. After removal of the forms, the area behind the sidewalks shall be backfilled and compacted with at least sixteen (16) inches of topsoil level with the sidewalk and curb. Less than 16 inches of topsoil may be approved where new sidewalk is being constructed along older streets. The topsoil shall be raked or otherwise leveled, taking care to break up large dirt clods and remove large stones. All denuded areas shall be fertilized, resown with grass seed and covered with mulch as specified in Sections ES-27, ES-28.

14.4 Payment

The accepted quantities of concrete sidewalk will be paid for by the unit price per square yard. The unit price per square yard shall include all materials, labor, equipment, and other costs incidental to construction of concrete sidewalk, including aggregate base, as herein specified and as shown on the Plans and special drawings.

ES-15. SUPERPAVE HOT MIX ASPHALT

15.1 Hot Mix Asphalt

The Hot Mix Asphalt (HMA) pavement shall be placed in lifts to the thickness as specified on the Contract Plans and as required by the Standard Construction Drawings.

PAVEMENT THICKNESS SPECIFIED BY CITY OF MOSCOW DOCUMENTS (STANDARD DRAWINGS, STANDARD SPECIFICATIONS ETC.) SHALL MEAN THE FULLY COMPACTED, IN-PLACE DEPTH.

The materials of which the asphaltic concrete is composed shall be of such sizes and grading that, when proportioned and mixed together, they will produce a uniformly graded mixture, which when tested by means of laboratory screens, will conform to the requirements in the following table. The percentages of refer to the completed HMA mixture. All percentages shall be computed on the basis of weight. Screens and sieves used for determining the percentages of the different sizes of aggregate shall have square openings.

3/4” Superpave HMA Pavement CL SP-2 (Base Course)

Sieve Size	Percent Passing
1 inch	100

3/4 inch	90 – 100
1/2 inch	90 max
3/8 inch	52 – 80
No. 8	23 – 49
No. 200	2.0 – 8.0

1/2" Superpave HMA Pavement CL SP-2 (Surface Course)

Sieve Size	Percent Passing
3/4 inch	100
1/2 inch	90 – 100
3/8 inch	90 max
No. 8	28 – 58
No. 200	2.0 – 10.0

Superpave hot mix asphalt paving shall conform to the requirements, of the latest edition, of the Idaho Standards for Public Works Construction and amendments thereto. A copy of said specifications is available at the office of the City Engineer. Paving asphaltic cement used will be PG58-22 or PG58-28, or an approved equal, and shall conform to the specifications, of the latest edition, of the Washington State Department of Transportation Standard Specifications for Road, Bridge, and Municipal Construction and amendments thereto.

Section 405, of the latest edition, of the Idaho Transportation Department Standard Specifications for Highway Construction and amendments thereto, shall apply as to the items of "Weather Limitations, Hauling Equipment, Pavers, Rollers, Mixing Plant, Spreading and Finishing, Joints, Rolling, Surface Smoothness."

A Hveem or Super Pave Mix Design shall be submitted with associated "Job Mix Formula" (JMF) for approval, if required by the City Engineer.

15.2 Rolling and Compaction

Rolling and compaction of the asphaltic concrete mat shall be done in accordance, with the latest edition, of the Idaho Transportation Department Standard Specifications for Highway Construction and amendments thereto.

Compaction shall be achieved, as per Section 810, of the latest edition of the Idaho Standards for Public Works Construction and amendments thereto. A copy of said specifications is available at the office of the City Engineer.

The cost of the rolling and compaction shall be included in the price of furnishing and placing superpave hot mix asphalt pavement.

15.3 Tack Coat

Tack coat shall be applied at all edges where the new asphaltic surface joins the existing pavement and shall be applied in accordance with Section 401, of the latest edition, of the Idaho Transportation Department Standard Specifications for Highway Construction and amendments thereto.

15.4 Payment

The accepted quantities of superpave hot mix asphalt pavement will be paid for by the unit price per ton or per square yard. The unit price shall include all materials, labor, equipment, and other costs incidental to furnishing and placing the superpave hot mix asphalt pavement herein specified and as shown on the plans.

Weight slips in duplicate form shall accompany each load of superpave hot mix asphalt pavement to the construction site. Upon delivery of the material, one copy of the weight slip will be given to the Engineer, or his/her representative, and one copy will remain with the truck driver before the material is unloaded. Under no conditions will any weight slips be accepted by the Engineer, or his/her representative, after the material is unloaded from the vehicle. It shall be the responsibility of the Contractor to give the Engineer ample advance notice of the time when such material shall arrive on the job site in order to assure the presence of the Engineer, or his/her representative, at the job site during delivery of the material. The weight slips will be the only basis of determination of pay quantity for this item.

ES-16. ADJUSTMENT OF GATE VALVE BOXES, MONUMENTS, CATCH BASINS, CATCH INLETS, AND MANHOLES

Gate valve boxes, catch basins, catch inlets, monument casings, and manholes shall be adjusted to the grade, as established by the Engineer. Valve boxes, casings, rings and covers shall be reset in a careful and workmanlike manner to conform to the new grade. Special care shall be exercised in all operations in order not to damage the structures, equipment or water mains. Any damage occurring to the manholes, catch basins, gate valves, monuments, water meters or water mains, due to the contractor's operation, shall be repaired at the contractor’s expense. Any masonry adjustment shall be made by using pre-cast risers, bricks, concrete blocks or poured concrete, or HDPE Cretex Pro-Ring or City Approved Equal.

The Contractor shall notify the appropriate utility company, in advance, if gas valve boxes need to be adjusted, so the utility company personnel can do so, in a timely manner.

The Contractor shall notify the City Water Department, in advance, if water meter boxes need to be adjusted, so the Water Department personnel can do so, in a timely manner.

Location of valve boxes, catch basins and manholes on the plans is approximate only. They will be accurately located and referenced by the Engineer, or his/her representative, whenever possible. Manhole lids and catch basin and monument covers and valve box lids shall, preferably, be set to grade following the final application of asphaltic concrete. During paving operations, tops of manholes, monuments, catch basins and valve box lids shall be covered with building paper, diesel oil, or other suitable material to prevent sticking of asphalt to the metal lids.

Where excavation is necessary to adjust the grade of manholes, catch basins, monuments, or valve boxes, the backfill shall be carefully placed and tamped by hand.

Payment for adjustment of manholes, catch basins, gate valves, and monuments will be made according to the unit price for each unit adjusted.

The unit price bid shall include all costs incurred in furnishing materials and labor necessary to adjust the particular units to grade.

ES-17. MANHOLES AND CATCH BASINS

17.1 General

Catch basins, catch inlets, and manholes shall be precast reinforced concrete units, furnished and installed in accordance with the project plans, these Standard Specifications, and the Standard Drawings.

Completed catch basins and manholes including ring shall be capable of withstanding, with a reasonable margin of safety, a concentrated load of 20,000 pounds.

Backfill shall be placed in horizontal layers no more than 6 inches thick with each layer compacted to 95 percent of the maximum density or as approved by the Engineer.

17.2 Precast Reinforced Concrete Manholes, Catch Basins, and Catch Inlets

Precast reinforced manholes, catch basins, and catch inlets sections shall conform to AASHTO M-199, ASTM C-478 and ASTMC-433 and as shown on the Standard Construction Drawings.

A. Base Sections. Base shall be placed on a well graded dewatered granular bedding course. The bedding course shall be firmly tamped and made smooth and level to assure uniform contact and dimensions shall conform to the standard drawings. If the base is cast in place, the concrete shall conform, to the latest edition, of the Idaho Transportation Department Standard Specifications for Highway Construction Class 30 concrete. Where water is encountered at the site all cast in place bases shall be placed on a one-piece waterproof membrane so as to prevent any movement of water into the fresh concrete.

B. Joints. All lift holes and all joints between precast elements shall be first filled with an asphaltic fiber material then finished smooth with mortar. The fiber shall be Ramneck brand or approved equal.

C. Steps. Not required.

D. Workmanship and Finish. Cones and sections shall be substantially free from fractures, large and deep cracks and surface roughness. In precast sections where loops have been provided in lieu of lift holes, the loops shall be removed flush with the inside wall surface after the manhole or catch basin has been completed. No sharp cut-off protrusions will be permitted. If concrete spalling occurs as a result of loop removal, the spalled area shall be restored in workmanship manner to a uniform smooth surface with mortar.

17.3 Rings and Lids

Rings and lids shall be cast iron and shall conform to the Standard Drawings. Castings shall conform to the requirements of ASTM A-48 Class 138 and shall be free of porosity shrink cavities, cold shuts or cracks, or any surface defects which would impair serviceability.

17.4 Sanitary Sewer Manholes

A. General. Sanitary sewer manholes shall be constructed according to Plans, Standard Drawings and Specifications. All sanitary manholes shall be constructed of precast reinforced concrete sections.

The Contractor may construct a channel through the manhole by either running sewer pipe through the bottom of the manhole, pouring concrete around the pipe and breaking out the upper half of the pipe; or by pouring concrete in the bottom of the manhole and forming a channel through the manhole by hand.

B. Basis of Payment. Sanitary sewer manholes will be paid for according to the unit price per each or per vertical foot.

The unit price bid shall include all cost incurred in furnishing materials, labor, excavation, installing the manholes in place including the asphaltic coating on the outside of the manhole and the manhole rings and lids, and backfilling.

C. Watertightness

1. SANITARY SEWER MANHOLES SHALL BE CONSTRUCTED WATERTIGHT. All visible leaks (infiltrating subsurface water) shall be sealed; sealing shall be accomplished by a manner and method, in the opinion of the Engineer, that constitutes permanency. Leaks that cannot be sealed by Contractor shall be sealed either by the pressure grouting method (injected chemical sealants) or the interior surface coating method, utilizing a firm specializing in such services, at the Contractor's expense. Less than four minor drips in a single manhole will be considered negligible and will not require sealing.

2. Hydrostatic Testing.

a. All sanitary sewer manholes constructed in areas where subsurface water may, in the opinion of the Engineer, pond around them shall be hydrostatically tested in accordance with this specification.

b. Prior to testing, the manhole shall be completely constructed and all inlet and outlet pipes shall be plugged. The Contractor shall fill the manhole to the top with water. Four hours minimum after the manhole has been filled, the Contractor shall refill the manhole to the original water level and commence the test for a minimum 2-hour period. The leakage rate shall not exceed 0.2 gallons per hour per foot of test head above the pipe invert elevation. Manholes which fail the test shall be repaired and re-tested until they pass.

c. Manholes tested by the exfiltration method shall have all infiltrating water sealed prior to beginning the exfiltration test.

17.5 Storm Sewer Manholes

A. General. Storm sewer manholes shall be constructed according to the Plans, Standard Drawings and Specifications. Storm sewer manholes shall be precast reinforced concrete, unless otherwise approved by the Engineer.

All pipe extending into catch basins shall be trimmed within 1”-2” of the inside wall surfaces and shall be neatly grouted inside and out and watertight.

B. Basis of Payment. Storm sewer manholes will be paid for according to the unit price per each or per vertical foot.

The unit price bid shall include all costs incurred in furnishing materials, labor, excavation, installing manholes in place including the manhole rings and lids, and backfilling.

17.6 Catch Basins and Catch Inlets

A. General. Catch basins and catch inlets shall be constructed according to the Plans, Standard Drawings and specifications. Catch basins shall be precast reinforced concrete per WSDOT TYPE 1, catch inlets shall be WSDOT CONCRETE INLET - unless otherwise approved by the Engineer.

All pipe extending into basins and inlets shall be trimmed within 1”-2” of the inside wall surfaces shall be neatly grouted inside and out and watertight

Lids, grates, and risers shall be centered over the basin or inlet; unless specifically allowed otherwise.

B. Payment. Catch basins will be paid for by the unit price per each.

The unit price shall include all cost incurred in furnishing materials, labor, excavation, installing catch basins in place including the catch basin rings and lids, and backfilling.

17.7 Risers

A. Risers for height adjustment shall be as per WSDOT’s standard for the precast unit being furnished.

ES-18. SEWAGE SYSTEM BYPASS

18.1 Scope

This section covers the work necessary to keep sewer mains operational during repair and/or replacement of existing mains.

18.2 Preparation

1. Contractor to notify Engineer and Owner at least two working days (48 hours) in advance of mobilizing to commence sewage bypass system. Engineer must approve of bypass plan as specified in the Contract Documents.

2. Contractor to provide independent temporary power sources for sewage bypass pumping equipment. Contractor to provide all necessary temporary electrical service to machinery and provisions for backup power generation. Provide personnel to operate and maintain system function throughout the bypassing period.

18.3 Installation and Control System

1. Install bypass discharge piping in a manner to provide safe and reliable service, without disrupting public access and incorporation with the Traffic Control Plan. Maintain access to business and residences.

2. Bypass of sewage shall be in enclosed piping leak-tested prior to implementation. Wastewater is not permitted to flow in open trenches. Temporary gravity flow diversions through structures with partial pipes and/or baffles with concrete channels are permitted.

3. All materials and equipment used to control and/or divert flow, including, but not limited to pumps, plugs, and pipes, shall be designed and made of materials capable of handling sewage flows.

4. Contractor shall operate sewage bypass control system during hours of operation as allowed by local sound ordinances.

5. The Contractor shall take all necessary precautions, including constant monitoring of the sewage bypass system pumping equipment, to ensure that the sewage bypass system operates properly. The sewage bypass pumping shall not be left unattended. The Contractor shall be liable for all cleanup, damages, and resultant fines caused by sewage bypass system spills or inadequate system performance.

18-4 Termination

1. Remove equipment and appurtenances upon termination of sewage bypass control activities and restore disturbed areas to original condition.

18.4 Measurement and Payment

This item will include all equipment, labor, tools, materials, sewage bypass plan, piping, couplings, fittings, plugs, dewatering, bedding, demolition, pipe diversion, temporary bypass pumping, plugs, monitoring, demonstration, power supply, mobilization from reach to reach, ancillary control, coordination with Owner and affected property Owners, surface repairs, removal, and disposal of obstructions to accommodate work, and other related miscellaneous work and incidental work required to complete bypass of sewage flows in accordance with the Contract Documents.

Payment will be by the Lump Sum…….LS

ES-19. TRENCH EXCAVATION AND BACKFILL

19.1 Scope

This section covers the work necessary for the trench excavation and backfill above the pipe zone. Pipe zone backfill is included under the specification for the pipe.

19.2 Type of Backfill

The class of backfill to be used above the pipe zone shall be as set forth on the Plans or as given in the project Special Provisions and if not specifically set forth in project documents then as required by the "use" description given herein. The right is reserved to modify the use, location, and quantities of the various types of backfill, during construction, as the Engineer considers being in the best interest of the Owner.

Trench backfill, above the pipe zone, shall be as follows:

1. Class A Backfill. Use in landscaping and agricultural type areas where lawn sod, shrubs, topsoil, fences, and other landscape items are either being replaced or are anticipated.
2. Class B Backfill. Use within existing or proposed gravel parking lots – not within gravel streets or alleys.
3. Class C Backfill. Use in areas where asphalt pavement, concrete, curb, sidewalk, gravel surfacing, landscaping and agricultural use is not anticipated, present or future.
4. Class D Backfill. Use in existing gravel streets and alleys, existing gravel roadway shoulders and in areas where asphalt pavement, concrete, curb, and sidewalk is existing or anticipated in the future.
5. Class E Backfill. Use in lieu of Class D Backfill in new streets when specifically allowed by the City Engineer.
6. Class F Backfill. Use within and immediately adjacent to existing asphalt paved streets, alleys, driveways, and parking lots.

19.3 Excavation and Backfill for Fire Hydrants

Excavation and backfill for fire hydrants shall be included in the unit price payment for Fire Hydrants (See ES-22).

19.4 Trench Excavation

Trench excavation shall be classified as common excavation or rock excavation and shall include whatever materials are encountered to the depths as shown or as directed by the Engineer.

Common Excavation. Common excavation is defined as the removal of all material which is not classified as rock excavation.

Rock Excavation. Rock excavation shall conform to all specifications of Section 302, of the latest edition, of the Idaho Standards for Public Works Construction and amendments thereto. A copy of said Specifications is available at the office of the City Engineer.

19.5 Materials

A. Foundation Stabilization. Materials for foundation stabilization shall be 3/4 inch minus crushed rock with reasonable even gradation from coarse to fine and free from excessive dirt or other foreign material.

B. Granular Material. Granular backfill shall be 3/4 inch minus crushed basalt conforming to ES-7 CRUSHED ROCK BASE.

C. Imported Topsoil. Imported topsoil shall possess friability and a high degree of fertility. It shall be free of clods, roots, gravel and other inert material. It shall be free of quack grass, horsetail and other noxious vegetation and seed. Should such regenerative material be present in the soil, it shall be the responsibility of the Contractor to remove all such growth, both surface and root, which may appear in the planting within one year following acceptance of the job, at his/her own expense, and in a manner satisfactory to the Owner.

D. Compaction Equipment. Compaction equipment shall be of suitable type and adequate to obtain the amount of compaction specified. Compaction equipment shall be operated in strict accordance with the manufacturer's instructions and recommendations and shall be maintained in such condition that it will deliver the manufacturer's rated compactive effort.

19.6 Workmanship

A. Clearing. Do not remove existing trees or tree limbs over 2 inches in diameter, whether on public or private property, unless they are within 4 feet of the pipe centerline without permission from the Engineer. All such work shall conform to the City's Community Forestry ordinance. The Contractor shall bear all costs of disposing of trees, stumps, brush, roots, limbs, and other waste materials from clearing operations. Material shall be disposed of in such a manner as to meet all requirements of state, county and local regulations regarding health, safety and public welfare.

B. Obstructions. This term refers to obstructions which may be removed and do not require replacement. Obstructions within the trench area or adjacent thereto such as tree roots, stumps, abandoned piling, buildings and concrete structures, logs, rubbish and debris of all types shall be removed without additional compensation from the Owner. The Engineer will, if requested, make changes in the trench alignment to avoid major obstructions; if such alignment changes can be made within the perpetual easement and right-of-way and without adversely affecting the intended function of the facility.

The contract amount will be adjusted accordingly for any cost changes resulting from such alignment modifications.

Dispose of obstructions removed from the excavation in accordance with section ES-4 REMOVALS AND DISPOSALS.

C. Utility Repairs. Any and all underground utility damaged in any way during trench excavation shall be repaired and properly backfilled, by the Contractor, at no cost to the City. The repair shall be as approved by the City – NO EXCEPTIONS.

D. Removal and Replacement of Topsoil. In all cases where trenches cross lawns, garden areas, pasture lands, cultivated fields, or other areas on which reasonable topsoil conditions exist; first remove the topsoil for a depth of 10 inches for the full width of the trench to be excavated. Stockpile this topsoil to one side of the right-of-way and do not mix with the remaining excavated material. Replace the topsoil in the top 10 inches of the backfilled trench. In lieu of stockpiling the top 10 inches of soil, "Imported Topsoil" from borrow pits may be substituted in the top 8 inches. Maintain the finished grade of the topsoil, over the center line of the trench, level with the immediate area bordering the trench, until acceptance of final seeding. Correct all damage to adjacent topsoil caused by trenching or pipe laying operations by removal of all rock, gravel, clay, and any other foreign materials from the surface and by regrading the additional topsoil as required.

E. Pavement, Curb and Sidewalk Removal. Cut (full depth) all asphaltic concrete or Portland Cement concrete pavements (regardless of the thickness), and all curbs and sidewalks prior to excavation of the trenches with an approved pavement saw, hydrohammer or other approved pavement cutter. Removal of street surfacing for excavations shall comply with the Specifications and Standard Drawing for Street/Alley Curb Repair. Pavement and concrete materials removed shall be hauled from the site and not used for trench backfill.

F. Trench Width. Minimum width of trenches in which pipe is to be laid shall be 18 inches greater than the inside diameter of the pipe except by permission of the Engineer.

The maximum clear width at the top of the trench will not be limited, except in cases where excess width of excavation would cause damage to adjacent structures or property.

In all cases, confine trench widths to dedicated rights-of-way for public thoroughfares or within areas for which construction easements have been obtained.

G. Grade. Carry the bottom of the trench to the lines and grades shown, or as established by the Engineer, with proper allowance for pipe thickness and for pipe base or special bedding, when required. If the trench is excavated below the required grade, correct any part of the trench excavated below the grade, at no additional cost to the Owner, with gravel of the type specified for pipe zone material. Place the gravel over the full width of trench in compacted layers, not exceeding 6 inches deep, to the established grade with allowance for the pipe base or special bedding.

H. OSHA Compliance. All trench excavation and backfill shall conform to the latest published OSHA regulations, NO EXCEPTIONS.

I. Location of Excavated Materials. During trench excavation, locate the excavated material within the construction easement or right-of-way or specified working area so that the excavated material will not obstruct private or public traveled roadways or streets. It shall be the contractor's responsibility to conform with the federal, state and local codes governing the safe loading of all trenches with excavated material.

J. Removal of Water. Provide and maintain ample means and devices which will promptly remove and dispose of all water entering the trench excavation during the time the trench is being

prepared for the pipe laying, during the laying of pipe, and until the backfilling of the pipe zone has been completed. These provisions shall apply during the lunch hour as well as overnight.

Dispose of the water in an approved manner without damage to adjacent property.

Drainage of trench waste through the pipeline, under construction, is prohibited.

K. Foundation Stabilization. When, in the opinion of the Engineer, the existing material in the bottom of the trench is unsuitable for supporting the pipe, excavate below the flow line of the pipe, as directed by the Engineer, and backfill the trench to the subgrade of pipe base with approved material. Place the material over the full width of the trench in compacted layers, not exceeding 6 inches deep, to the established grade.

L. Backfill in Pipe Zone. Pipe zone backfill is included in the Specification for the pipe.

M. Trench Backfill Above Pipe Zone. Do not push the backfill material into the trench in such a way as to permit free fall of the material into the open trench, until at least 2 feet of cover is provided over the pipe. Under no circumstances allow sharp, heavy pieces of material to drop directly onto the pipe or the tamped material around the pipe. Do not use backfill material of consolidated masses larger than 1 cubic foot.

N. Classes of Backfill.
Trench backfill shall comply with the City's Standard Construction Drawings and as follows:

1. Class A Backfill
Backfill the trench, above the pipe zone, with approved excavated trench material to within 10 inches of final surface grade. Compact the entire trench depth in suitable lifts with a vibratory compactor, pneumatic or gasoline powered tampers, or hydraulic hammers. Determine the method and type of equipment and amount of compaction required to prevent subsequent settlement.

Where Class A backfill is specified replace topsoil in the top 10 inches of the trench. Compact and rake to match the ground surface adjacent to the trench.

Maintain the surface of the backfilled trench level with the existing grade until the entire project is accepted by the Owner. Any subsequent settlement of the finished surfacing during the warranty period shall be considered to be a result of improper or insufficient compaction and shall be promptly repaired by the Contractor at no cost to the Owner.

2. Class B Backfill
Backfill the trench, above the pipe zone, with approved excavated trench material to within 6 inches of final surface grade. Compact the entire trench depth in suitable lifts with vibratory compactors, pneumatic or gasoline power tampers, or hydraulic hammers. Determine the method and type of equipment and the amount of compaction required to prevent subsequent settlement. Place and compact granular material in the top 6 inches.

Maintain the surface of the backfilled trench level with the existing grade by additions of granular backfill material, as specified, until final surface replacement is completed or the entire project is accepted by the Owner. Any subsequent settlement of the finished

surface, during the warranty period, shall be considered to be a result of insufficient compaction and shall be promptly repaired by the Contractor at no cost to the Owner.

3. Class C Backfill
After the completion of the backfilling of the pipe zone, the excavated trench material may be pushed back into the trench by mechanical means.

In all locations where Class C backfill is used, the Contractor shall make his/her own estimate of the amount of backfill material required at the trench, so that after normal settlement has occurred, the finished surface will meet the existing grade. Neatly windrow the material over the trench and remove all excess. Any excess or deficiency of backfill material, which becomes apparent after settlement within the warranty period, shall be corrected by regrading, disposing of excess material or adding additional material where required. Remove rocks larger than 2 inches from the upper 8 inches of backfill.

4. Class D Backfill
Backfill the entire trench, above the pipe zone, with granular backfill material. Compact the entire trench depth to 95 percent density in 6 inch lifts with mechanical, vibrating or impact tampers. Determine the method and type of equipment and amount of compaction required to prevent subsequent settlement.

Maintain the surface of the backfilled trench level with the existing grade with crushed rock backfill material until final surface replacement is completed or the entire project is accepted by the Owner. Any subsequent settlement of the finished surface during the warranty period shall be considered to be a result of insufficient compaction and shall be promptly repaired by the Contractor at no cost to the Owner.

5. Class E Backfill

Class E trench backfill is to be used only where a new paved street is going to be constructed above the installed pipe.

The width of the trench, above the pipe zone, may be increased beyond the required specifications for pipe zone width, as described in the City of Moscow Standard Drawing #15, but shall not be less than (6) six feet.

Approved native excavated material may be used for backfill above the pipe zone in this widened trench. Compaction for all trench backfill, above the pipe zone, shall be 95% minimum of AASHTO T-99. All native backfill shall be placed in six (6) inch maximum lifts and method of compaction shall be only by a five (5) foot minimum wide sheepsfoot roller. Density testing frequency, for this approved native excavated material, will be in excess of that required for the Class ‘D’ crushed basalt backfill.

6. Class F Backfill
Backfill the trench, above the pipe zone, with granular material to within 4 inches of the finished surface.

Compact the entire trench, above the pipe zone, in six (6) inch maximum lifts with vibratory compactors, pneumatic or gasoline power tampers, or hydraulic hammers to a minimum 95 percent standard density. The top 4 inches of the trench is to have smooth cut edges before being backfilled with two equal lifts of asphaltic concrete patching mix.

7. Subsurface Drain Backfill

Backfill the entire trench to within 10 inches of the final surface grade or to the street subgrade, as applicable, with crushed or naturally occurring granular material from approved sources.

The material shall be washed, if necessary, to render the particles free from clay. It shall contain no more than 1% of clay lumps or other decomposed material. It shall conform to the following requirements for grading:

Sieve Size	Percent Passing
3”	100
2.5”	95 – 100
3/4”	50 – 80
1/4”	30 – 60
No. 8	20 – 50
No. 30	8 – 30
No. 50	3 – 12
No. 200	0 – 1.2

* All percentages are by weight.

That portion of the gravel backfilled for drains retained on a 1/4" square sieve shall not contain more than 0.05% by weight of wood waste.

Compaction, above the pipe zone, shall be accomplished by the use of mechanical, vibrating or impact tampers. Determine the method and type of equipment to use and amount of compaction required to prevent subsequent settlement.

Maintain the surface of the backfilled trench level with the existing grade by additions of granular backfill material as specified until final surface replacement is completed or the entire project is accepted by the Owner. Any subsequent settlement of the finished surface, during the warranty period, shall be considered to be a result of insufficient compaction and shall be promptly repaired by the Contractor at no cost to the Owner.

O. Maintenance of Excavated Trench. Maintain the excavated trench between any two successive valved sections of pipeline or as specified in the project Special Provisions until the following operations have been completed, to the satisfaction of the Engineer, for waterline construction: Service connections have been installed, including pressure tap; valves, valve boxes, hydrants and thrust blocks installed, hydrostatic or air testing, sterilization, cleanup and restoration of all physical features, utilities restored to their original condition, or better, and in general, all work required between the two line valves accomplished with the exception of repaving.

P. Maintenance of Trench Backfill. This maintenance shall include, but not be limited to, the addition of crushed rock backfill material to keep the surface of the backfilled trenches reasonably smooth and free from excessive ruts and potholes and suitable for normal traffic flow.

Trenches backfilled within existing paved streets shall be temporarily surfaced with 2.5 inches of cold mix asphalt pavement; which temporary cold mix surfacing shall be placed within one day of completion of trench backfilling. This temporary patch shall be installed and maintained smooth until the permanent hot mix patch is installed. Under certain circumstances, this requirement may be waived by the City Engineer.

No additional payment will be made for the maintenance of the trench backfill prior to completion of the work outlined above, and the trench backfill maintenance and shall be considered as incidental to that item of work.

Q. Disposal of Excess Excavation. All excess excavation not required or suitable for backfill shall be disposed of in a waste area arranged by the Contractor.

R. Drainage Culverts. Replace, in like kind, drainage culverts which are removed or damaged. If the pipe is damaged during removal, dispose of it and furnish and install new pipe. Dispose of culvert pipe that is in too poor condition to reuse because of age or physical conditions. Repair drainage pipes with manufactured fittings only; encase Ferncos in concrete.

S. Blasting. Blasting shall conform to all specifications of Section 302, of the latest edition, of the Idaho Standards for Public Works Construction and amendments thereto. A copy of said specifications is available at the office of the City Engineer.

19.7 Payment

Payment for trench excavation and backfill will be as specified for main line pipe as follows:

A. Trench Excavation and Backfill. Payment for trench excavation and backfill shall be included in the price per linear foot of the respective pipe stated in the Contractor's bid proposal.

Payment for trench excavation and the respective backfill shall constitute full compensation for all work specified and incidental to the price per linear foot of the respective pipe.

Pipe zone backfill is specified under Section ES-20 PIPE.

B. Rock Excavation. Rock excavation shall be measured for payment as the actual quantity of rock removed within the approved limits.

ES-20. PIPE

20.1 Storm Sewer Pipe

Mains, **4-inch to 15-inch**: SDR 35 PVC ASTM D 3034, gasketed.

Mains, **18-inch to 36-inch**: Solid wall PVC ASTM F 679 or HDPE (High Density Polythylene) AASHTO M 294, smooth-walled interior, silt-tight.

Culvert Pipe: Corrugated Steel Pipe and Pipe Arches conforming to AASHTO M 36, 2-2/3" x ½ corrugations. Round pipe shall be 16 gage minimum; arch pipe shall be 12 gage minimum.

Storm Sewer Service Laterals: SDR 35 PVC ASTM D-3034, except as follows: where a service lateral crosses a water main or a water service line with less than 18 inches of clearance between the two pipes the sanitary sewer service lateral pipe shall be un-jointed PVC pressure water pipe, either Schedule 40 PVC or Class 160 PVC ASTM D-2241 for distance nominally ten feet each side of the crossing. This pressure water pipe shall be joined to standard SDR 35 PVC pipe at both ends with FERNCO couplers having stainless steel shear ring bands.

20.2 Sanitary Sewer Pipe

All sanitary sewer pipe shall be a minimum of eight (8) inch diameter except sewer to house connections which shall be a minimum of four (4) inch diameter.

Mains, 8-inch diameter and larger: SDR 35 PVC ASTM D-3034.

Service Laterals: SDR 35 PVC ASTM D-3034, except as follows: where a service lateral crosses a water main or a water service line with less than 18 inches of clearance between the two pipes the sanitary sewer service lateral pipe shall be un-jointed PVC pressure water pipe, either Schedule 40 PVC or Class 160 PVC ASTM D-2241 for distance nominally ten feet each side of the crossing. This pressure water pipe shall be joined to standard SDR 35 PVC pipe at both ends with FERNCO couplers having stainless street shear ring bands.

20.3 Perforated Subsurface Drain Pipe

A. General. A perforated roadway underdrain system may be shown on the Plans and shall be furnished and installed as herein described in these Specifications, as shown on the City's Standard Construction Drawings and as shown on the Plans.

Laterals will generally be connected to the collector at 60° angles. The terminal end of each lateral will be sealed with a plug. All connections between pipe sections and branches are to be water tight.

The pipe shall be wrapped with a filtering sock.

Perforated Subsurface Drain Pipe that is corrugated on the inside will not be allowed.

Perforated pipe and fittings shall not be dumped into the trench. All pipe shall be inspected prior to lowering into the trench and if necessary cleaned of any material tending to plug the perforations of the pipe.

Pipe shall be laid with the perforations at the bottom or as per manufacturer's instructions.

Gravel backfill for drains shall be as defined under Section ES-19 TRENCH EXCAVATION AND BACKFILL.

B. Types of Pipe. Perforated subsurface drain pipe as indicated on the plans and standard drawings shall be one of the following types of pipe or as approved by the Engineer:

1.Perforated Corrugated Plastic Pipe

This pipe shall be Advanced Drainage System (ADS) N-12 pipe or approved equal. The pipe shall be 4" in diameter, having at least two (2) rows of perforations parallel to the axis of the pipe. The pipe and fittings shall meet the requirements of AASHTO M-252 Type S (corrugated outside-SMOOTH INSIDE). The joints shall be gasketed non-water tight joints (Soil tight per AASHTO section 26); Gaskets may be architectural weather stripping material per ASTM D-1056 or rubber per ASTM F-477.

2. Perforated Solid Wall Plastic Pipe

This pipe shall be Advanced Drainage System (ADS) pipe or approved equal. The pipe shall be four (4) inches in diameter, having at least two (2) rows of perforations parallel to the axis of the pipe. The pipe and fittings shall meet the requirements of AASHTO M-252. The joints shall be gasketed non-water tight joints (Soil tight per AASHTO section 26); Gaskets may be architectural weather stripping material per ASTM D-1056 or rubber per ASTM F-477.

20.4 Water Pipe & Ductile Iron Fittings

A. Joints. Pipe joints shall be push-on joints except where specifically shown or detailed otherwise.

B. Mechanical Joint Fittings. Three-inch through sixteen-inch mechanical joint ductile iron fittings shall be Tyler SSB Class 350 ductile iron fittings, or an approved equal, and shall conform to ANSI/AWWA C-111

C. Flanged Ductile Iron Fittings. Flanged fittings shall conform to ANSI/AWWA C-110 and shall be faced and drilled to 125-pound ANSI. The fittings shall be 125 PSI rated working pressure and cement-mortar lined to same thickness specified for pipe.

D. Mechanical Couplings. Mechanical couplings, not a part of the pipe itself, shall be ductile iron couplings with long solid sleeves and be Mechanical Joint Class 350. Mechanical couplings shall mean straight couplings, transition couplings, reducing couplings, and flanged coupling adapters.

E. Ductile Iron Pipe. All ductile iron pipe shall be centrifugally cast of 60-42-10 iron and shall conform to ANSI / AWWA C-151. Thickness class or classes shall be 51(minimum). The pipe shall be cement mortar lined and seal coated in accordance with ANSI / AWWA C-104. The rubber ring gaskets shall be suitable for the specified pipe sizes and pressure and shall conform to applicable parts of the latest federal specification ANSI / AWWA C-111, and shall be furnished by the pipe manufacturer. A nontoxic vegetable soap lubricant shall be supplied with the pipe in sufficient quantities for installing the pipe.

F. Polyvinyl Chloride (PVC) Pressure Pipe. All PVC pressure pipe shall conform to pressure Class 150 AWWA C-900 or pressure Class 165 AWWA C-905. All pipe shall be push-on joints with one gasket bell end.

G. Tapping Sleeves. All tapping sleeves shall be ROMAC “SST” Stainless Steel as per ASTM A-240, Type 304 and Type 304L or an approved equal.

20.5 Pipe Laying

Pipes shall be laid in straight lines at uniform rates of grade as shown on the plans.

Proper preparation of foundation, placement of foundation material where required, and placement of pipe zone material below the pipe shall precede the installation of all sewer, water and culvert pipe. This shall include necessary leveling of the native trench bottom or the top of the foundation material as well as placement and compaction of required pipe zone material, below the pipe, to a uniform grade so that the entire length of pipe will rest firmly on a well compacted material, so the backfill material around the pipe will be placed in a manner to meet requirements specified under backfilling.

Water pipe delivered for construction shall be handled so as to minimize entrance of foreign material. When pipe laying is not in progress as, for example, at the close of a day's work, all openings in the pipeline shall be closed by water-tight plugs. Joints of all pipe in the trench shall be completed before work is stopped. If water accumulates in the trench, the plugs shall remain in place until the trench is dry.

If dirt that, in the opinion of the Engineer, will not be removed by flushing enters the pipe, the interior of the pipe shall be cleaned and swabbed as necessary with a 5% hyperchlorite disinfecting solution.

A. Backfill at the Pipe Zone. The pipe zone shall be considered to include the full width of the excavated trench from the bottom of the trench (a minimum of 4 inches under the pipe) to a point 12 inches above the top outside surface of the barrel of the pipe.

   Particular attention must be given to the area of the pipe zone from the flow line to the center line of the pipe to insure that firm support is obtained to prevent any lateral movement of the pipe during the final backfilling of the pipe zone.

   Backfill the area of the pipe zone from the bottom to the horizontal center line of the pipe with "imported pipe zone material." Hand place the material around the pipe in 6-inch layers and thoroughly hand tamp with approved tamping bars supplemented by "walking in" and slicing with a shovel.

   All material, within the pipe zone, shall be hand tamped and done in such a manner as to not change the grade of the pipe (particularly gravity pipe).

B. Joints. In making the joints on the pipe care shall be exercised to clean all dirt, rock or other foreign matter completely from the inside of the bells and the outside of the spigots. The pipe shall be forced tightly in place with a bar or mechanical puller of a type approved by the Engineer. When the pipe is aligned it shall be supported by placing sufficient backfill material alongside and carefully tamped into place as described under Section 20.5.A.

   When two different types of gravity pipe are joined together, a Fernco coupler may be used, upon approval of the Engineer. The completed connection shall be supported, in such a manner, as to maintain established line and grade and shall be encased, on all sides, with a minimum of four (4) inches of concrete. The concrete shall extend a minimum of two (2) feet on each side of the coupler.

Lubricant for water pipe gaskets shall be supplied by the pipe manufacturer.

C. Caps and Connections. Caps for pipe branches, stubs, or other open ends which are not to be immediately connected shall be made of an approved material and shall be secured in a place with a joint comparable to the main line joint, or stoppers may be of an integrally cast breakout design. Caps of the type recommended by the pipe's manufacturer shall be used.

D. Imported Pipe Zone Material. Granular material for pipe zone backfill shall be 3/4" minus crushed rock unless otherwise specified. The material shall meet the specifications, of the latest edition, of the Idaho Transportation Department Standard Specifications for Highway Construction and amendments thereto.

E. Water Main Location and Separation. The location and separation of the water and non-potable water main pipes, both horizontal and vertical, shall meet the most current requirements of IDAPA 58.01.08 – Idaho Rules for Public Drinking Water Systems.

F. Permissible Deflection at Joints - Water Pipe. Wherever it is necessary to deflect pipe from a straight line, either in the vertical or horizontal plane, to avoid obstructions or where long radius curves are permitted, the amount of deflection allowed shall not exceed the values in the following table:

*MAXIMUM DEFLECTION PERMITTED (18 FOOT LENGTH PIPE)

Bell and Spigot		Mechanical Joint	Push-on Joint	
Diameter (Inches)	Max. & Min. Deflection Angle (Degrees)	Deflection (Inches)	Max. Deflection Angle (Degrees)	Deflection (Inches)
6	7-07	27	5	19
8	5-21	20	5	19
10	5-21	20	5	19
12	5-21	20	5	19
14	3-35	13 ½	3	11
16	3-35	13 ½	2	11
18	3-00	11	3	11
20	3-00	11	3	11
24	2-23	9	3	11

*The maximum deflection shall be whichever is less, the table or that recommended by pipe manufacturer.

G. Anchorage (water pipe)

1. Limiting Pipe Diameter and Degree of Bend
On all pipelines six (6) inches in diameter or larger, securely anchor by suitable thrust blocking all tees, plugs, caps, and bends where unbalanced forces exist, as directed by the Engineer.

2. Thrust Blocking
Provide thrust blocks as required by the Standard Construction Drawings. The concrete mix shall have a compressive strength of not less than 2,500 psi. Place blocking between the undisturbed ground and the fitting to be anchored; plastic sheathing to be placed between the concrete and fitting. The bearing surface shall be as shown or as directed by the Engineer. Place the blocking so that the pipe and fitting joints will be accessible to repairs, unless otherwise shown.

3. Metal Tie Rods
Metal tie rods, if specifically required by the Plans or the Engineer, shall be used in conjunction with thrust block. The rods, nuts and washers shall be coated with a rust resistant coating. (A product intended for such use.)

20.6 Pipe Testing and T. V. Inspection

A. Sanitary Sewer Pipe. The finished sanitary sewer shall be tight against leakage from either the inside or the outside of the pipe.

All wyes, tees, and stubs shall be plugged with flexible jointed caps, or acceptable alternate, securely fastened to withstand the internal test pressure. Such plugs or caps shall be readily removable, and their removal shall provide a socket suitable for making a flexible jointed lateral connection or extension.

Exfiltration testing of the sanitary sewer pipe will be conducted by the Contractor, under the supervision of the Engineer, or his/her representative, after the sewer line is backfilled. The Contractor shall notify the Engineer at least twenty-four (24) hours in advance of his/her intention to pressure test the line.

If the test indicates that there is excessive leakage in the line the Contractor shall make repairs, at his/her own expense, and take such corrective action as may be required by the Engineer.

T.V. inspection of the sanitary and storm sewer pipe will be conducted by the City after the pipe has been backfilled and the manholes are accessible.

1. Exfiltration Test (Using Air)
The Contractor shall plug all openings in the pipe and supply necessary metering equipment and hoses for the test and a blower or compressor with adequate capacity to perform the test.

Immediately following the pipe cleaning, the pipe installation shall be tested with low pressure air. Air shall be slowly supplied to the plugged pipe installation until the internal air pressure reaches four (4) pounds per square inch greater than the average back pressure of any ground water that may submerge the pipe as determined by the Engineer.

At least two minutes shall be allowed for temperature stabilization before proceeding further. The inspector will then accurately determine the time of loss of one (1) psi. This time interval shall not be less than the time interval determined in the following formula.

$$T = 0.0109\ D2L$$

T = time in seconds
D = nominal inside diameter of pipe in inches
L = length of pipe in feet

Failure to meet or exceed the computed time interval for the loss of one (1) psi will be cause for rejection of the sewer pipe.

All repairs necessary to meet these requirements and/or testing will be at the expense of the Contractor.

The maximum length of sewer pipe, for the above tests, shall be the distance between consecutive manholes. Any section of sewer pipe, between any two manholes that does not meet the above requirements, shall be rejected.

2. T.V. Inspection

T.V. inspection, (by the City), of the newly installed sanitary and storm sewer pipes will be required, preferably, before the placement of asphalt on the roadway. It shall be the responsibility of the Contractor to give the Engineer ample advance notice of the time when this inspection is to be performed to assure the timely scheduling of the City's personnel and equipment.

Any and all imperfections (i.e. sags in the pipe invert, joints not fully seated, offset joints, poor manhole entries and exits, etc.) found in the installation of the pipe shall be immediately repaired by the Contractor at no cost to the City. Such repairs shall be as allowed and directed by the City Engineer.

A. Water Pipe

All new watermain shall pass City standard pressure testing and bacteriological testing. Pressure testing, flushing, disinfection, and bacteriological testing shall be performed by the City Water Department. All testing, flushing, and disinfecting materials and labor costs of the City's shall be the responsibility of the City. It is the Contractor's responsibility to repair all leaks. The test pressure shall be 1-½ times the working pressure of the pipe per AWWA standards. The bacteriological test criteria shall be as follows: one test showing "absence" of coliform bacteria (<1) and a standard plate count of less than 100. The Contractor shall be responsible for all excavation and back fill necessary to allow the City Water Department access to the new main for the City to furnish, install, and remove all corporation stops necessary to test, chlorinate, and bacteriological sample the new main as required. This includes backfill and trench surfacing once and then returning to the site to re-excavate and re-backfill (including cold mix patching) any corporation stops that remain in the main during disinfecting and sampling procedure. Where connections are made to existing mains the fitting and pipe shall be thoroughly cleaned and spray disinfected with 150(+) ppm chlorine solution immediately prior to their installation and such procedure shall be witnessed by a representative of the City; such operations by the contractor require the City to be notified a minimum of 48 hours in advance. The 48-hour notice is necessary to allow the City crew to notify customers of the water outage. The contractor shall be responsible for coordinating and cooperating with the City Water Department for testing, flushing, and disinfecting activities.

20.7 Plugging Existing Pipe

Where shown in the Plans or where designated by the Engineer, existing pipes shall be plugged on the inlet end for a distance of two (2) diameters with commercial concrete. Care shall be used in placing the concrete in the pipe to see that the opening of the pipe is completely filled and thoroughly plugged.

20.8 Basis of Payment

A. Storm Sewer Pipe. The accepted quantities of storm sewer pipe will be paid for by the unit price per linear foot and shall include all costs incidental to furnishing and laying pipe, as herein described, including furnishing and installing lock bands at each joint and all pipe zone material.

B. Sanitary Sewer Pipe. The accepted quantities of sanitary sewer pipe will be paid for by the unit price per linear foot and shall include all costs incidental to furnishing and laying pipe. The cost of furnishing all pipe zone material is also included in this item.

C. Perforated Sub-surface Drain Pipe. The accepted quantities of subsurface drain pipe will be paid for by the unit price per linear foot and shall include all costs incidental to furnishing and laying pipe, as herein described, including all angle branches, plugs, pipe connectors, and all pipe zone material.

D. Water Pipe & Ductile Iron Fittings. Payment for main line water pipe, including fittings, thrust blocks and couplings will be made at the unit price per linear foot.

E. Plugging existing pipes will be measured per each, for each plug installed, for pipe diameters up to and including 36 inches. The concrete for plugging pipes in excess of 36 inches in diameter will be measured by the cubic yard. Computations for corrugated metal pipes will be based on the nominal diameter.

The measurement for payment will be the field measured centerline length of the pipe in place within the limits shown. Laying lengths of valves, fittings and couplings will be included. Payment for fittings, couplings and thrust blocks shall be considered incidental to the cost of the respectively-sized pipe.

Payment for valves will be made at a per each unit price.

ES-21 GATE VALVES AND VALVE BOXES

21.1 Scope

This section covers the work necessary for furnishing and installing the gate valves and valve boxes, complete.

21.2 Materials

A. Gate Valves (all sizes). Valves shall be ductile iron AMERICAN FLOW CONTROL SERIES 2500 resilient seated valves, or an approved equal, and shall open when the stem is rotated

counterclockwise. Unless otherwise shown, valves shall have 2-inch square wrench nut. Valve ends and valve sizes shall be shown. Valves shall conform to ANSI / AWWA C-509.

B. Valve Boxes. Valve boxes for valves 12" in size and smaller shall be Buffalo 2-piece slip - type, cast iron with 5-1/4-inch shaft, and shall be TYLER 6855 series of appropriate length for the installation, or approved equal. Valve boxes for valves over 12" in size shall be Buffalo 3-piece sliding type cast iron with 5-1/4-inch shaft and shall be TYLER 6855 series of appropriate length for the installation or approved equal. The word "Water" shall be cast into the top of the lids. Extension pieces, if required, shall be the manufacturer's standard type for use with the valve boxes.

C. Extension stems for valve operators. Where the depth of the opening nut is more than 4.5 feet, standard operating extensions shall be provided to bring the operating nut to a point 3.5 feet below the surface of the ground or pavement. The extension stem shall be constructed of steel (and coated).

21.3 Workmanship

A. Valves. Before installation, the valves shall be thoroughly cleaned of all foreign material, and shall be inspected for proper operation for both opening and closing, and to verify that the valves seat properly. Valves shall be installed so that the stems are vertical, unless otherwise directed by the Engineer. Jointing shall conform to AWWA C-600 or AWWA C-603, whichever is applicable. Valves shall be installed in accordance with "Standard Details". Joints shall be tested with the adjacent pipeline. If joints leak during the test, valves shall be disconnected and reconnected, and the valve and/or the pipeline retested.

Faces of flanges shall be cleaned thoroughly before flanged joint is assembled. After cleaning, the gasket shall be inserted and the nuts tightened uniformly around the flange. If flanges leak under test, the nuts shall be loosened, the gasket reset or replaced, the nuts retightened, and the valve and/or pipeline retested.

Valves on all service connections and stubouts, 4 inch and larger, shall be mechanical joint and shall be restrained with coated tie rods.

B. Valve Boxes. Center the valve boxes and set plumb over the wrench nuts of the valves. Set valve boxes so that they do not transmit shock or stress to the valves. Set the valve box covers flush with the surface of the finished pavement as shown, or such other level as may be ordered by the Engineer. Cut extensions to the proper length so that the valve box does not ride on the extension when set at grade.

Backfill shall be the same as specified for the adjacent pipe. Place backfill around the valve boxes and thoroughly compact to a density equal to that specified for the adjacent trench and in such a manner that will not damage or displace the valve box from proper alignment or grade. Misaligned valve boxes shall be excavated, plumbed, and backfilled at the Contractor's expense.

Valve boxes shall be clean prior to final project acceptance.

21.4 Payment

Payment for gate valves furnished and installed, complete, with valve boxes will be by the unit prices per each. Payment for the gate valves and valve boxes shall constitute full compensation for the work as specified under this section.

Payment for gate valves and valve boxes furnished and installed as auxiliary valves on hydrants shall be included in the unit price for hydrants.

ES-22. STORM AND SANITARY CONNECTIONS

22.1 Materials

A. Sewer house connections, where required on the plans or ordered by the Engineer, shall be a minimum of four (4) inch diameter pipe. The pipe shall conform to Specification ES-8.2, Sanitary Sewer Pipe, except that it shall be green in color.

B. Pipe zone material, unless otherwise specified, shall be 3/4 inch minus pea gravel, crushed rock, pea gravel, or clean sand.

22.2 Workmanship

A. The sewer house connections shall be branched from the main sewer line by a Y branch on new mains; by a ROMAC style "CB' saddle on existing sewer mains. Branches shall be placed where indicated on the plans or as ordered by the Engineer, and shall be installed, at a point, above the centerline of the sanitary sewer main.

B. ROMAC style "CB" saddles shall be furnished and installed by the City and paid for by the contractor.

C. Sanitary sewer services shall not be connected to manholes.

D. Maximum deflection permissible with any one fitting shall not exceed 45 degrees and shall be accomplished with long-radius curves or bends. Short-radius elbows or curves will not be permitted except by approval of the Engineer.

E. Provide ends of all sewer house connection lines with standard watertight plugs, suitably braced to prevent blowoff during internal hydrostatic or air testing. With all plugs in place, test the sanitary sewer lines in accordance with ES-20.6, Pipe Testing and T.V. Inspection.

F. After the line has been tested by the Contractor and accepted by the Engineer, the Contractor shall furnish and install an approved marker, as per City of Moscow Standard Drawings, to identify the ends of the sewer stubs. The marker shall be wrapped with detectable sewer tape.

G. Conform to applicable portions of Section ES-19 Trench Excavation and Backfill and Section ES-20.2 Sanitary Sewer Pipe.

H. Backfill the pipe zone with granular pipe zone material, hand-placed simultaneously on both sides of the pipe for the full trench width and hand-tamped with approved tamping bars supplemented by 'walking in' and slicing with a shovel.

I. Backfill, above the pipe zone, shall conform to applicable portions of Section ES-19 Trench Excavation and Backfill. Do not backfill sewer house connection pipe until inspected and approved by the Engineer.

J. All denuded areas shall be fertilized, re-sown with grass seed and covered with mulch as specified in Sections ES-27 and ES-28.

K. Install as per the Standard Construction Drawings.

L. Separation of storm and sanitary sewer service laterals from water mains and water service lines shall conform to the requirements of Idaho Drinking Water Standards.

22.3 Basis of Payment

A. Trench excavation and backfill, required under this item, will be paid for as incidental to the price per linear foot of pipe stated in the Contractor's bid proposal. Payment for that item shall constitute full compensation for all work connected with excavation and backfill.

B. Sewer house connection pipe, in place, will be paid for on the unit price per linear foot for the appropriate size of pipe stated in the Contractor's bid proposal. Payment for this item shall constitute full compensation for all materials and work required to install the sewer house connection pipe, complete, including trench excavation and backfill. The length of the house connection will be based on the total length of pipe installed, including all fittings, measured along the pipe center line.

ES-23. STREET / ALLEY CUT REPAIR

All excavations in to existing City street paving shall be repaired in accordance with the City's adopted STREET / ALLEY CUT REPAIR policy and as per Standard Construction Drawing entitled STREET /ALLEY CUT REPAIR.

ES-24. EROSION AND SEDIMENT CONTROL

All construction in the City involving earthwork shall comply with all of the requirements of City Code Section 7-1-4 pertaining to Erosion and Sediment Control and the City of Moscow EROSION AND SEDIMENT CONTROL STANDARDS adopted by resolution.

The Contractor shall implement appropriate erosion control eliminating sediment transport to City infra-structure and private property. The Contractor shall pay all costs associated with sediment removal from City infra-structure, private property or environmental remediation.

All sediment control devices shall be installed prior to any ground disturbing activity.

ES-25. STORMWATER RUNOFF CONTROL

All construction and development activity in the City shall comply with all of the requirements of City Code Section 5-15 STORMWATER RUNOFF CONTROL and including Moscow STORMWATER RUNOFF CONTROL STANDARDS adopted by resolution.

ES-26. IMPORTED TOPSOIL

27.1 General

Imported topsoil shall possess friability and a high degree of fertility. It shall be free of clods, roots, gravel and other inert material. It shall be free of quack grass, horsetail and other noxious vegetation and seed. Should such regenerative material be present in the soil, it shall be the responsibility of the Contractor to remove all such growth, both surface and root, which may appear in the planting within one year following acceptance of the job at his/her own expense and in a manner satisfactory to the Owner.

27.2 Payment

Payment for furnishing and placing imported topsoil shall be paid according to the unit price bid on the Contractor's bid proposal form or as noted as set forth in the Contract documents.

ES-27. INSPECTION

Work performed under this contract shall be inspected at various stages of progress. These inspections include, but shall not be limited to the following:

A. After storm sewer lines, sanitary sewer lines, perforated drain lines and their structures are in place, but before any backfilling is started.

B. Prior to and during the placement of all concrete. This inspection shall be requested when the forms are in place and ready to receive the concrete.

C. After the street has been excavated and compacted, but before any crushed rock is placed.

D. During the application and processing of the crushed rock base and after the crushed rock base has been placed and compacted, but before the prime coat is applied.

E. After valve boxes, catch basins, manholes and monuments have been adjusted to the proper elevation.

F. Prior to and during the placement of prime coat and tack coat.

G. Prior to and during the placement of all superpave hot mix asphalt pavement.

H. At the completion of the job, after all cleanup, backfilling and all other work is done and job is ready for final acceptance.

It shall be the responsibility of the Contractor to notify the Engineer, or his/her representative, when the various phases of the project are ready for inspection.

Request for inspection may be verbal but shall be given in sufficient time to allow the Engineer, or his/her representative, to arrange to be present as required. Failure to notify the Engineer, or his/her representative, of the inspections shall be sufficient ground to reject the uninspected work and cause its immediate removal.

All discrepancies, indicated by the inspector, shall be corrected by the Contractor and re-inspected before the next phase of operation is started. No claim shall be made for delays caused by correction of work found unacceptable to the inspector.

ES-28. WORKMANSHIP AND CLEAN UP

It is the intent and purpose of these Specifications and Plans to obtain good workmanship throughout with the completed work complying with the said Specifications and Plans and in full working order upon completion. Work will not be accepted until this result is obtained.

All debris or rubbish caused by the contractor's operations shall be removed and the areas occupied during such operation shall be left in a neat and presentable condition.

Any damage to private property shall be repaired, replaced in kind, as approved by the City Engineer or the Owner compensated as required by the General Specifications.

Upon the satisfactory completion of all work embraced in the contract and specifications, including the cleanup, together with full compliance with the requirements of the General Specifications the Engineer will, within fifteen (15) days after such completion and compliance, issue a certificate of completion to the Owner with two (2) copies to the Contractor.

ES-29. MOBILIZATION

This item shall consist of preparatory work and operations, including but not limited to, those necessary for the movement of personnel, equipment, supplies and incidentals to the project site; for the establishment of offices, buildings and other facilities necessary for the work on the project; for premiums on bond and insurance for the project; for all other work and operations which must be performed or costs incurred before beginning production work on the various contract items. Mobilization cost for subcontracted work shall be considered to be included in the prices bid by the prime Contractor.

The amounts to be allowed for mobilization in the partial payment to be made under the contract will be made as follows:

1. Sixty percent of the amount bid for mobilization will be paid on the first monthly progress estimate.
2. Forty percent of the amount bid for mobilization will be paid on the second monthly estimate providing that the contractor has initiated productive work on the project.

Mobilization will be measured and paid for by the Lump Sum as shown on the Contractor’s Proposal.

SPECIAL PROVISIONS

SCOPE

The project's base bid consists of the paving of the alley between Almon Street and Asbury Street. The paving of the gravel alley includes the replacement of the existing sanitary sewer main and installation of storm water collection and conveyance. Paving of the heavily used alley will improve conditions and reduce excessive maintenance costs.

Note: All quantities are approximate, planned and actual quantities may vary.

GENERAL

All labor, materials, equipment, traffic control, and incidentals necessary for the completion of the work, as herein described in these specifications and as shown on the plans, shall be furnished by the Contractor. All work performed under this contract shall be completed in strict accordance with these SPECIAL PROVISIONS, ENGINEERING SPECIFICATIONS, CONTRACT PLANS, and the City of Moscow STANDARD CONSTRUCTION SPECIFICATIONS and DRAWINGS (unless herein modified). These SPECIAL PROVISIONS, and the CONTRACT PLANS have precedence over the City standards and Standard Drawings where not in agreement.

The Contractor shall schedule all work under this contract to be a sustained and concerted effort to complete the project within the allotted time. The project construction schedule specific to the item tasks shall be completed by Contractor subject to possible restrictions established by the Owner.

Traffic control shall be in place any time a vehicle, piece of equipment or stockpile is in the roadway. No stockpiles of material will be allowed except during working hours. The Contractor shall make no changes or modifications to the approved traffic control without prior approval from the Street Division Manager or the Engineer.

The contractor is responsible for worker and public safety and control within and about the work site and shall provide all necessary warning devices, barricades, signage and ground personnel needed to ensure safety, protection and warning to all persons and traffic within the area. The Contractor must obtain all permits and bonds required.

The contractor is responsible for damages to any and all facilities and appurtenances, plant material, underground utilities and other improvements and must repair and/or replace any or all items damaged in a timely and acceptable manner at no cost to the Owner. The Contractor shall patch, repair, and/or replace all existing work immediately adjacent to the newly constructed areas, or where removals are made, so that such adjacent work is left in the same state of work.

All lawn areas damaged by the Contractor shall be repaired to the satisfaction of the Engineer. This work may include grading and sodding, as required. Any tree, within the construction area, whose branches, trunk or roots must be removed in order to complete the work, should be trimmed, as directed

by the Engineer. All costs for such trimming shall be noted as set forth in the Contract documents. All tree trimmings shall conform to the applicable sections of the community forestry ordinance.

Underground utility locates shall be the responsibility of the Contractor. The Contractor shall be responsible for all repair of 'located' utilities damaged during this project.

All debris or rubbish generated by the Contractor's operations shall be removed and the areas occupied during such operation shall be left in a neat appearing condition. Any property, public or private, damaged by the Contractor shall be repaired to its original condition at the expense of the Contractor and approved by the Engineer.

It is the Contractor's responsibility to make provision and pay for water and power necessary for work under this contract and to clean-up any spills or debris or residues created by their work.

The Contractor shall become familiar with the site and its restrictions prior to bidding. He/she should also be familiar with all aspects of these specifications, pertinent to City Codes and the plans for this works. All tax liabilities imposed by the State Tax Commission must be met and verified prior to the release of the final payment. Attention to Idaho Code, Chapter 15, Title 63.

Construction items that are not explicitly covered in these written specifications but are required to complete a functioning project shall not be misconstrued by the Contractor as not being a part of the scope of the work covered by the contract. Those items that are not specifically covered in these specifications, but are required by the plans, shall be constructed in accordance with the construction industry's highest standards.

It is the intent and purpose of these specifications and plans to obtain good workmanship throughout, with all work complying with these specifications. The project will not be considered substantially complete until all requirements of these specifications have been completed to the satisfaction of the Engineer.

INSPECTION

It shall be the responsibility of the Contractor to notify the City Engineer, or his/her designated representative, when the various phases of the project are ready for inspection.

Request for inspection may be verbal, but shall be given in sufficient time to allow the Engineer, or his/her representative, to arrange to be present as required. Failure to notify the Engineer, or his/her representative, of the inspections shall be sufficient ground to reject the uninspected work and cause its immediate removal.

All discrepancies indicated by the inspector shall be corrected by the Contractor and re-inspected before the next phase of operation is started. No claim shall be made for delays caused by correction of work found unacceptable to the inspector.

ORDER OF WORK

The specific details of the order of work will be worked out in conjunction with, and under the supervision of the City Engineer. The Contractor shall coordinate all work within city streets at least twenty-four (24) hours in advance with the Streets Manager, Steve Schulte, (208) 883-7097. Failure to provide advance notification shall void any claims for delay of Contractor's work by City forces.

ABANDONING & REMOVAL OF EXISTING WATER MAINS

The contractor shall abandon existing water mains after completion of new water main installation. Where existing water mains have been cut or removed because of new pipe conflict, the cut ends must be plugged with a water class plug to prevent the abandoned pipe from filling with groundwater. This work of removal, abandoning and plugging is to be considered incidental to the new pipe installation.

MISC REMOVALS

Items requiring removal to complete new installations of underground infrastructure that do not have a bid item specifically associated with them, but are required to complete the work shall be incidental to the new installation.

TREE ROOTS

The Contractor shall be especially cognizant of apparent tree roots that will require caution during the performance of this work item and shall notify the Community Forestry Administrator, David Schott (208) 883-7098, upon encountering roots of 1" or greater diameter before cutting those roots.

ENVIRONMENTAL PROTECTION

The Contractor shall comply with all Federal, State and local laws and regulations pertaining to protection of the environment. Best management practices shall be followed to prevent pollution of surface and groundwater, soil, and the atmosphere with any contaminate including hazardous or toxic materials. Any release of these materials into the environment will require immediate corrective action by the Contractor in accordance with applicable State and Federal regulations.

The Contractor shall conduct and schedule his/her operations and abide by the conditions of any State or Federal permit to avoid or minimize impacts on streams, lakes, wetlands, reservoirs, aquifers, and associated fish and wildlife habitat. The Contractor shall not use for any purpose public storm sewer, sanitary sewer, recreation areas, regulator floodways, wetlands, or critical habitat without written approval of the regulatory agency.

SP-1.1 REMOVE & DISPOSE OF BITUMINOUS SURFACE

This work shall consist of, but not limited to, the removal and disposal of bituminous surface. The removal shall be adjusted in accordance with the Project Plans, Engineering Specifications ES-4, and the Standard Drawings. Monuments shall be referenced prior to street removal.

Existing bituminous surface to be removed shall be saw-cut, if necessary, full depth, on smooth, straight lines as marked in the field. Saw cutting shall be considered incidental to this item. The asphalt is to be

removed and disposed of by the contractor in a timely manner. Location of a disposal site is the responsibility of the contractor.

Crushed rock must be placed along the edge of any vehicle or pedestrian approach affected by these removals to provide temporary vehicle access if needed to maintain local access. The contractor must notify the property owner at least 24 hours in advance of any impact to driveway access.

This item includes everything required to complete this work including, but not limited to labor, materials and equipment.

Measurement and Payment:

Removal and disposal of bituminous surface shall be paid per square yard. Payment shall be as shown on the Contractor's Proposal and shall include all materials, labor, equipment, and incidentals necessary to perform the work for:

SP-1.1 REMOVE & DISPOSE OF BITUMINOUS SURFACE ..... SY

SP-1.2 REMOVE & DISPOSE OF CONCRETE DRIVEWAY APPROACH

This work shall consist of, but not limited to, the removal and disposal of concrete driveway approach. The removal shall be adjusted in accordance with the Project Plans, Engineering Specifications ES -4, and the Standard Drawings. Any property corners shall be referenced prior to removal

Sections of concrete to be removed shall be cleanly saw-cut perpendicular to the alignment of the adjacent competent curb or sidewalk. **Excavation and disposal of material necessary to accommodate the placement of six inches (6") of new, compacted base rock beneath the new sidewalk and pedestrian ramps, and four inches (4") of new, compacted base rock beneath new curbs and vehicular approaches is considered incidental to the removal items.**

This item includes everything required to complete this work including, but not limited to labor, materials and equipment.

Measurement and Payment:

Removal and disposal of concrete driveway approach shall be paid per square yard. Payment shall be as shown on the Contractor's Proposal and shall include all materials, labor, equipment, and incidentals necessary to perform the work for:

SP-1.2 REMOVE & DISPOSE OF CONCRETE DRIVEWAY APPROACH ... SY

SP-1.3 REMOVE & DISPOSE OF MANHOLE

This work shall consist of, but not limited to, the removal and disposal of manhole regardless of the type (precast, poured in place, etc.), material and depth. The removal shall be adjusted in accordance with the Project Plans, Engineering Specifications ES-4, and the Standard Drawings.

This item includes everything required to complete this work including, but not limited to labor, materials and equipment.

Measurement and Payment:

Removal and disposal of manhole shall be paid per each. Payment shall be as shown on the Contractor's Proposal and shall include all materials, labor, equipment, and incidentals necessary to perform the work for:

SP-1.3 REMOVE & DISPOSE OF MANHOLE ..... EA

SP-1.4 EXCAVATION (PLAN QUANTITY)

This work shall consist of, but not limited to, the excavation of the street from top of existing concrete roadway to the proposed subgrade for new construction and the excavation of gravel within green strips for proposed driveway approaches. Excavation shall be adjusted in accordance with the Project Plans, Engineering Specifications ES-5, and the Standard Drawings. This item also includes subgrade preparation, including any fine grading, embankment and compaction. The contractor is responsible for disposal of excess material.

This item includes everything required to complete this work including, but not limited to labor, materials and equipment.

Measurement and Payment:

Excavation shall be measured and paid by the cubic yard as determined by cross sections (plan quantity) and by field measurement for any unanticipated work. Payment shall be as shown on the Contractor's Proposal and shall include all materials, labor, equipment, and incidentals necessary to perform the work for:

SP-1.4 EXCAVATION ..... CY

SP-2.1 SANITARY SEWER MANHOLE (4' DIAMETER)

This work shall consist of, but not limited to, the installation of sanitary sewer manhole. The installation shall be adjusted in accordance with the Project Plans, Engineering Specifications ES-17, ES-18, and ES-21, and the Standard Drawings. The work necessary to plug/abandon or connect existing sanitary mains as shown in the construction drawings is incidental to this item.

This item includes everything required to complete this work including, but not limited to labor, materials and equipment.

Measurement and Payment:

Sanitary Sewer Manhole (4' Diameter) shall be paid per each. Payment shall be shown on the Contractor's Proposal and shall include excavation, bedding, backfill, ring and cover and all materials, labor, equipment, and incidentals necessary to perform the work for:

SP-2.1 SANITARY SEWER MANHOLE (4' DIAMETER)……EA

SP-2.2 8-INCH PVC SANITARY SEWER PIPE (CLASS D BACKFILL)

`

This item includes everything required to complete this work including, but not limited to labor, materials and equipment. Sanitary Sewer Pipe Material shall be as described in the plans and shall meet the requirement in ES-20 PIPE.

Measurement and Payment

Installation of sanitary sewer pipe shall be paid by the Linear foot installed. Payment shall be as shown on the Contractor's Proposal and shall include materials, labor, equipment, and incidentals necessary to perform the work for:

SP-2.2 8-INCH SANITARY SEWER PIPE (CLASS D BACKFILL)……..LF

SP-2.3 EXISTING SANITARY SERVICE CONNECTION

This work shall consist of, but not limited to, the work and materials required to connect existing sanitary sewer services to the new sanitary sewer mains regardless of size and type. The installation shall be in accordance with the Project Plans, Engineering Specifications ES-19, ES-20, ES-23 and the Standard Drawings.

The Contractor shall cut and remove sanitary drain components as necessary for the installation of the required fittings at the points of connection. The Contractor shall determine the exact length of the existing sanitary service that must be removed, and shall cut and bevel all pipe ends to prevent damage to couplings or gaskets during installation of the new fittings. The exterior of the existing pipe end shall be cleaned to a sound, smooth finish before installation of fittings. All damage to existing pipelines to remain in-service that is caused by the Contractor's operations shall be repaired by the Contractor at no expense to the City.

The Contractor shall provide and install all pipeline, fittings, and other components necessary to complete the connection of the new sanitary main and the existing pipeline(s) unless otherwise noted in the plans. All fittings, pipeline and other components required to complete the connection shall be provided and installed by the Contractor at no additional cost to the City, unless otherwise noted on the plans.

This item includes everything required to complete this work including, but not limited to labor, materials and equipment.

Measurement and Payment

Existing sanitary service connection shall be measured per each for each service that is reconnected to the sanitary sewer main. Payment shall be as shown on the Contractor's Proposal and shall include materials, labor, equipment, and incidentals necessary to perform the work for:

SP-2.3 EXISTING SANITARY SERVICE CONNECTION……...EA

SP-2.4 SANITARY SEWER BYPASS

This work shall consist of, but not limited to, the labor, equipment and materials required to maintain temporary sanitary sewer flows through the project site. This work shall be in accordance with the Project Plans, Engineering Specifications ES-18 SEWAGE SYSTEM BYPASS.
The Contractor shall provide all equipment including but not limited to pumps, piping, fittings, and other components necessary to maintain sewer flows.

The sewer main serves approximately 100 EDU's at an average demand of 247 gallons per day per EDU. The project performance period is intentionally set during a period of the year when occupancy of those units will be lightest and inflow and infiltration will least problematic.

This item includes everything required to complete this work including, but not limited to labor, materials and equipment.

Measurement and Payment

Sanitary Sewer Bypass measured and payment shall be lump sum. Payment shall be as shown on the Contractor's Proposal and shall include materials, labor, equipment, and incidentals necessary to perform the work for:

SP-2.4 SANITARY SEWER BYPASS……...LS

SP-3.1 CATCH BASIN

This work shall consist of, but not limited to, the installation of catch basin. The installation shall be in accordance with the Project Plans, Engineering Specifications ES-18, ES-19, ES-23, and the Standard Drawings. Catch basins shall be placed in the flow line of the street and where possible hooded frames shall be used.

This item includes everything required to complete this work including, but not limited to labor, materials, and equipment.

Measurement and Payment:

Catch basin shall be paid per each. Payment shall be as shown on the Contractor's Proposal and shall include excavation, bedding, hood and frame backfill, and all materials, labor, equipment, and incidentals necessary to perform the work for:

SP-3.1 CATCH BASIN.....EA

SP-3.2 8-INCH STORM SEWER PIPE (CLASS D BACKFILL)

This work shall consist of, but not limited to, the installation of storm sewer pipe including the required fittings. The installation shall be adjusted in accordance with the Project Plans, Engineering Specifications ES-19, ES-20, ES-23 and the Standard Drawings. The contractor may elect to use either dual wall (smooth

interior) corrugated plastic pipe or PVC storm pipe except where C900 water class pipe is shown in the construction drawings.

This item includes everything required to complete this work including, but not limited to labor, materials and equipment.

Measurement and Payment:

Installation of storm sewer pipe shall be paid by the linear foot installed. Payment shall be as shown on the Contractor's Proposal and shall include excavation, bedding, backfill, all materials, labor, equipment, and incidentals necessary to perform the work for:

SP-3.2a 8-INCH STORM SEWER PIPE (CLASS D BACKFILL) ..... LF
SP-3.2b 8-INCH C900 STORM SEWER PIPE (CLASS D BACKFILL) ..... LF

SP-3.3 EXISTING STORM DRAIN CONNECTION

This work shall consist of, but not limited to, the work and materials required to connect to existing storm drain mains regardless of size and type. The installation shall be in accordance with the Project Plans, Engineering Specifications ES-19, ES-20, ES-23 and the Standard Drawings.
The Contractor shall cut and remove storm drain components as necessary for the installation of the required fittings at the points of connection. The Contractor shall determine the exact length of the existing storm drain that must be removed, and shall cut and bevel all pipe ends to prevent damage to couplings or gaskets during installation of the new fittings. The exterior of the existing pipe end shall be cleaned to a sound, smooth finish before installation of fittings. All damage to existing pipelines to remain in-service that is caused by the Contractor's operations shall be repaired by the Contractor at no expense to the City.
The Contractor shall provide and install all pipeline, fittings, and other components necessary to complete the connection of the new storm main and the existing pipeline(s) unless otherwise noted in the plans. All fittings, pipeline and other components required to complete the connection shall be provided and installed by the Contractor at no additional cost to the City, unless otherwise noted on the plans.

This item includes everything required to complete this work including, but not limited to labor, materials and equipment.

Measurement and Payment:

Existing storm service connection shall be measured per each for each service that is reconnected to the storm sewer main. Payment shall be as shown on the Contractor's Proposal and shall include materials, labor, equipment, and incidentals necessary to perform the work for:

SP-3.3 EXISTING STORM DRAIN CONNECTION..... EA

SP-4.1 REINFORCED DRIVEWAY APPROACH

This work shall consist of constructing concrete pavement approaches and driveways with steel reinforced concrete to allow the adjacent sidewalk to be constructed in compliance with ADA and City standards.

All Driveway Approaches shall be constructed per attached plans, City of Moscow Standard Construction Drawing #9, and in accordance with City of Moscow Engineering Specifications ES-11 and ES-12.

Driveway approaches shall be considered as those accesses typically constructed between the existing curb line and the removal limits of the driveway shall consist of a 6-inch thick reinforced concrete slab with 4-inch thick base aggregate. Reinforcement shall be per the standard drawing. Steel reinforcement shall be held at 2 inches above the bottom of the new concrete with mortar blocks, or other devices approved by the Engineer. Fiber reinforced concrete may not be used in lieu of steel reinforcement.

Excavated areas within the roadway shall be backfilled with 3/4" minus crushed aggregate conforming to City of Moscow Standard ES-7 CRUSHED ROCK BASE to the level of the adjacent asphalt and compacted to 95% of AASHTO T-99 maximum density in lifts not to exceed 8 inches depth.

Measurement and Payment:

Measurement and payment for Reinforced Driveway Approach shall be by the square yard as measured in the field. Payment shall include all costs incurred to construct the item including labor, equipment and other incidental costs for the following bid item included on the Contractor's Bid Proposal:

SP-4.1 REINFORCED DRIVEWAY APPROACH ..... SY

SP-5.1 1/2" SUPERPAVE HMA PAVEMENT

This work shall consist of paving the alley at as shown in the typical section as well as patching back removed bituminous surfaces with 1/2" Superpave HMA Pavement as shown in the construction drawings and in accordance with ES-15 SUPERPAVE HOT MIX ASPHALT and these Specifications. This work shall take place after the aggregate base grade and compaction are approved by the Engineer.

Tack coat shall be applied at all edges where the new asphalt surface joins the existing pavement and/or curb in accordance with ES-15 SUPERPAVE HOT MIX ASPHALT. Tack coat shall not be applied when surface or weather conditions would prevent proper construction. All objects adjacent to the areas to be tacked, including curbs, shall be adequately protected from over spray from the distributor. The Contractor shall satisfactorily repair any discolored surfaces.

Any rutted, damaged, or chipped edges in the existing asphalt matt shall be neatly sawn and removed immediately prior to tack coat application.

A pre-paving meeting with the paving crew, foreman, quality control personnel, and other key individuals will be conducted prior to start of paving operations to ensure that everyone involved with the paving is aware of the project requirements and how their actions can affect the quality of the finished project.

This item includes everything required to complete this work including, but not limited to lab work, materials and equipment.

Measurement and Payment:

Measurement for 1/2" SUPERPAVE HMA PAVEMENT shall be paid per ton, as determined by weigh slips, and complete with all necessary compaction. The Contractor will be responsible for furnishing

weigh slips to the Engineer upon delivery to the project. Payment shall be as shown on the Contractor's Proposal and shall include all materials, labor, equipment and incidentals necessary to the do the work for:

SP-5.1 1/2" SUPERPAVE HMA PAVEMENT.....TON

SP-5.2 3/4" CRUSHED ROCK BASE

This work shall consist of, but not limited to, the installation of crushed aggregate base. The installation shall be in accordance with the Project Plans, Engineering Specifications ES-7, and the Standard Drawings.

This item includes everything required to complete this work including, but not limited to labor, materials and equipment.

Measurement and Payment:

3/4" Crushed Rock Base shall be paid per ton, as determined by weigh slips, at the thickness described above and as shown on the project plans. The Contractor shall be responsible for furnishing weigh slips to the Engineer upon delivery to the project. The unit price, per ton, shall include all materials, labor, equipment and incidentals necessary to furnishing, placing and compacting for:

SP-5.2 3/4" CRUSHED ROCK BASE .....TON

SP-5.3 1-1/4" CRUSHED ROCK BASE

This work shall consist of, but not limited to, the installation of crushed aggregate base. The installation shall be in accordance with the Project Plans, Engineering Specifications ES-7, and the Standard Drawings. This item includes everything required to complete this work including, but not limited to labor, materials and equipment.

Measurement and Payment:

1-1/4" Crushed Rock Base shall be paid per ton, as determined by weigh slips, at the thickness described above and as shown on the project plans. The Contractor shall be responsible for furnishing weigh slips to the Engineer upon delivery to the project. The unit price, per ton, shall include all materials, labor, equipment and incidentals necessary to furnishing, placing and compacting for:

SP-8.3 1-1/4" CRUSHED ROCK BASE……TON

SP-5.4 SUBGRADE SEPARATION GEOTEXTILE

This work shall consist of furnishing and installing geotextile in accordance ES-6 SUBGRADE SEPARATION GEOTEXTILES, with these specifications and in reasonable conformity to the details shown on the plans or as directed by the Engineer.

During period of shipment and storage, the geotextile shall be placed in a dry place off the ground and protected from damage and shall be maintained in an opaque, heavy-duty protective covering.

Geotextile shall be Type II, nonwoven or woven, as set forth in Section 718.07 – Subgrade Separation Geotextile Property Requirements of the latest edition of the Idaho Transportation Department's Standard Specifications for Highway Construction.

The area to be covered shall be graded to a smooth uniform condition free of obstacles, depressions, and debris. The geotextile shall be spread immediately ahead of the covering operation. The geotextile shall not be dragged on the ground or mishandled in any way. The geotextile shall be placed loosely and without wrinkles so that placement of the overlying material will not tear the geotextile. The geotextile shall be lapped or sewn, as specified, at the ends and sides of adjoining sheets. The cover material shall be placed on the geotextile in such a manner that a minimum of six (6) inches of material will be between the vehicle of equipment tires or tracks and the geotextile at all times.

Where geotextiles will be placed over soft ground, construction vehicles shall be limited in size and weight such that rutting in the initial lift above the geotextile is not greater than three (3) inches deep, to prevent overstressing the geotextile. Turning of vehicles on the first lift above the geotextile is not permitted. Compaction of the first lift above the geotextile over soft ground shall be limited to routing or placing and spreading equipment only. No sheepsfoot-type equipment will be allowed on the first lift. Subsequent lifts will be closely observed during compaction. If any foundation failures occur during compaction operations, lightweight compaction equipment shall be used. Pegs, pins or the manufacturer's recommended method shall be used as needed to hold the geotextile in place until the specified cover material is placed. Under no circumstances shall cover material be dropped on unprotected geotextile from a height greater than three (3) feet above the surface of the geotextile.

The geotextile shall be covered with the specified cover material as soon as possible. Geotextiles which have not been ultraviolet stabilized shall not remain uncovered for longer than seven (7) days. Ultraviolet stabilized material shall not remain exposed for longer than thirty (30) days.

Should the geotextile be torn or punctured, or the overlaps or joints disturbed, as evidenced by visible geotextile damage, subgrade pumping, intrusion, or roadbed distortion, the backfill around the damaged or displaced area shall be removed and the damaged geotextile repaired or replaced by the Contractor at no cost to the Owner. The repair shall consist of a patch of the same type of geotextile placed over the ruptured area. The patch shall overlap the existing fabric a minimum of eighteen (18) inches from the edge of rupture.

Measurement and Payment:

Subgrade separation geotextile will be measured to the nearest square yard of surface area actually covered. No separate measurement will be made for construction of laps, seams, joints, or patches, unless the Engineer orders more than the specified lap, in which case the added lap width will be measured. Payment shall include all materials, labor, equipment and incidentals necessary to perform the work for:

SP-5.4 SUBGRADE SEPARATION GEOTEXTILE ..... SY

SP-5.5 SOFT SPOT REPAIR

This work shall consist of, but not limited to, the repair of soft spots. The repair shall be adjusted in accordance with the Project Plans, Engineering Specifications ES-8, and the Standard Drawings.

This item includes everything required to complete this work including, but not limited to labor, materials and equipment.

Measurement and Payment:

Soft spot repair shall be paid per square yard as measured by field measurements. Payment shall be as shown on the Contractor's Proposal and shall include, all materials, labor, equipment, and incidentals necessary to perform the work for:

SP-5.5 SOFT SPOT REPAIR ..... SY

SP-6.1 INLET PROTECTION

This work consists of installing and maintaining inlet protection below or above, or as a prefabricated cover at each inlet grate prior to the beginning of any construction.

Below Inlet Grate devices shall be prefabricated units specifically designed for inlet protection and shall remain securely attached to the drainage structure when fully loaded with sediment and debris, or at the maximum level of sediment and debris specified by the manufacturer.

Above Inlet Grate devices may be silt fences, sandbags, or prefabricated units specifically designed for inlet protection. The device shall remain securely in place around the drainage structure under all conditions.

Inlet Grate Cover devices shall be prefabricated units specifically designed for inlet protection and have the following features:

1. Be a sewn geotextile fabric unit fitted to the individual grate and completely enclosing the grate.
2. Have built-in lifting devices to allow manual access of the stormwater system.

Check dams or functionally equivalent devices may be used as inlet protection devices with the approval of the Engineer

Measurement and Payment:

Inlet Protection will be measured per each for each device furnished and installed on the project one time. No separate payment will be made in the event that inlet protections are transferred from existing inlets to new inlets. Payment shall include all materials, labor, equipment and incidentals necessary to perform the described work including installation, removal, maintenance, and disposal at an approved disposal site for:

SP-6.1 INLET PROTECTION ..... EA

SP-6.2 STABILIZED CONSTRUCTION ENTRANCE

This work shall consist of constructing one (1) Stabilized Construction Entrance. The Stabilized Construction Entrance is used to prevent vehicles and equipment from tracking mud or sediment material onto the paved public road.

The stabilized area shall consist of an erosion control geotextile fabric covered with a graded aggregate. The aggregate shall be of a size as to not be tracked from the stabilized area. All construction shall be done in accordance with Specification ES-25 EROSION AND SEDIMENT CONTROL.

Measurement and Payment:

Measurement for STABILIZED CONSTRUCTION ENTRANCE will be per each for each stabilized entrance furnished and installed on the project. Payment for this item shall include all materials, labor, equipment and incidentals necessary to construct, maintain, remove, and any associated work for:

SP-6.2 STABILIZED CONSTRUCTION ENTRANCE ..... EA

SP-7.1 TRAFFIC CONTROL

Temporary Traffic Control

This item shall consist of furnishing all necessary materials, labor, equipment and incidentals necessary to adequately sign, flag and direct vehicular traffic and pedestrians through or around the project. Traffic control must conform to the requirements of ES-2 TRAFFIC CONTROL/R.O.W. USE PERMITS, the Manual on Uniform Traffic Control Devices (MUTCD) and these Specifications.

Traffic Control Plan(s) must be approved by the Engineer prior to the commencement of any work. The Contractor shall develop and supply its own Traffic Control Plan to the City Prior to any work.

Approval of construction signing and flagging assignment must be made in the field by the Engineer prior to any paving operations.

A sufficient number of barricades and flashers shall be provided to warn of disturbed areas through the work zone. Signing plans must be prepared and approved for general access of local traffic during the evening as well. Local access points provided for and identified in the traffic control plans, furnished by the Contractor, must transition safely into the construction area and must be maintained by the Contractor. Appropriate advance warning must be provided on all approaches to the construction. Signing must be done in accordance to the latest edition of the MUTCD. When flagging is to be used, an adequate number of certified flaggers must be provided for each movement of traffic. The Contractor shall have flagging vests and stop paddles on the job for use of flagging operations. The Contractor must be prepared to provided unexpected signing if construction operations dictate the need. The Contractor must also provide an individual to function as a contact for Traffic Control Maintenance in evenings and weekends.

Pedestrian traffic shall be restricted in the project area. The Contractor shall provide and place sidewalk closure and detour signage as necessary to adequately route pedestrian traffic around the site in a manner

that minimized "back-tracking" and additional walking distance. This shall be included in the traffic control plan and must be approved by the Engineer prior to beginning the work.

Public Communication / Notification and Access

The Contractor will be responsible to notifying affected residents by flyer / door hangers or other approved method a minimum of 72 hours in advance of their work. The information shall be approved by the Engineer prior to use and shall include information such as: date(s) and time that their operation will be in progress; what residents should expect and the conditions for which they should be made aware of; a request that any irrigation or other items that cause the roadway to become saturated to be turned off; an on-site Field Supervisor's contact name with mobile phone number; and to provide a knowledgeable person that can address special access needs during the construction work or to answer questions.

The Contractor will be required to provide ingress and egress to driveways and side streets at all times, except for short-term closures needed to perform the Work.

In addition, the Contractor shall be responsible for notifying other agencies and service 72 hours in advance of their Work. These agencies and service are considered, but not limited to: Smart Transit, Whitcom, local school district (if applicable), U.S. Post Office, local fire department, local garbage service, etc.

If weather or other issues prevent the Contractor from performing the Work, they will reschedule the Work and provide additional Public Notification per the requirements listed within this section.

Measurement and Payment:

Measurement and payment for TRAFFIC CONTROL shall be by lump sum as shown on the Contractor's Proposal for all materials, labor, equipment, and incidental costs necessary to complete the work for:

SP-7.1 TRAFFIC CONTROL.....LS

SP-8.1 MOBILIZATION

This item shall consist of preparatory work and operations, including but not limited to, those necessary for the movement of personnel, equipment, supplies, and incidentals to the project site; for the establishment of offices, buildings and other facilities necessary for the work on the project; for premiums on bond and insurance for the project; for all other work and operations which must be performed or costs incurred before beginning production work on the various contract items. Mobilization cost for subcontracted work shall be considered to be included in the prices by the prime contractor.

The amounts to be allowed for mobilization in the partial payment to be made under the contract will be made as follows:

1. Sixty percent of the amount bid for mobilization will be paid on the first monthly progress estimate.
2. Forty percent of the amount bid for mobilization will be paid on the second monthly estimate providing that the Contractor has initiate productive work on the project.

Measurement and Payment:

Measurement for MOBILIZATION shall be lump sum. Payment for this item shall be at the price shown on the Contractor's Proposal, according to the above guidelines, and shall include all materials, labor, equipment and incidentals necessary to perform the work for:

SP-8.1 MOBILIZATION .....LS

APPENDIX I

CONSTRUCTION DRAWINGS

SHEET NUMBER	DESCRIPTION
1	COVER SHEET
2	DEMOLITION PLAN
3	DEMOLITION PLAN
4	PLAN & PROFILE
5	PLAN & PROFILE
6	PLAN & PROFILE
7	PLAN & PROFILE
8	TYPICAL SECTION
9	STD DWG #21
10	STD DWG #22
11	STD DWG #26
12	STD DWG #28
13	STD DWG #33b

CITY OF MOSCOW
ALMON ASBURY ALLEY PAVING PROJECT
PROJECT NO. 104-020

INDEX TO SHEETS

Sheet NO.	Description
1	COVER SHEET
2	DEMOLITION
3	DEMOLITION
4	PLAN AND PROFILE
5	PLAN AND PROFILE
6	PLAN AND PROFILE
7	PLAN AND PROFILE
8	TYPICAL SECTION
9	STD DWG #21 SANITARY SEWER MANHOLE
10	STD DWG #22 STORM SEWER MANHOLE
11	STD DWG #26 CATCH BASIN
12	STD DWG #28 SANITARY & STORM SERVICE CON.
13	STD DWG #33b BACKFILL-CLASS C & D

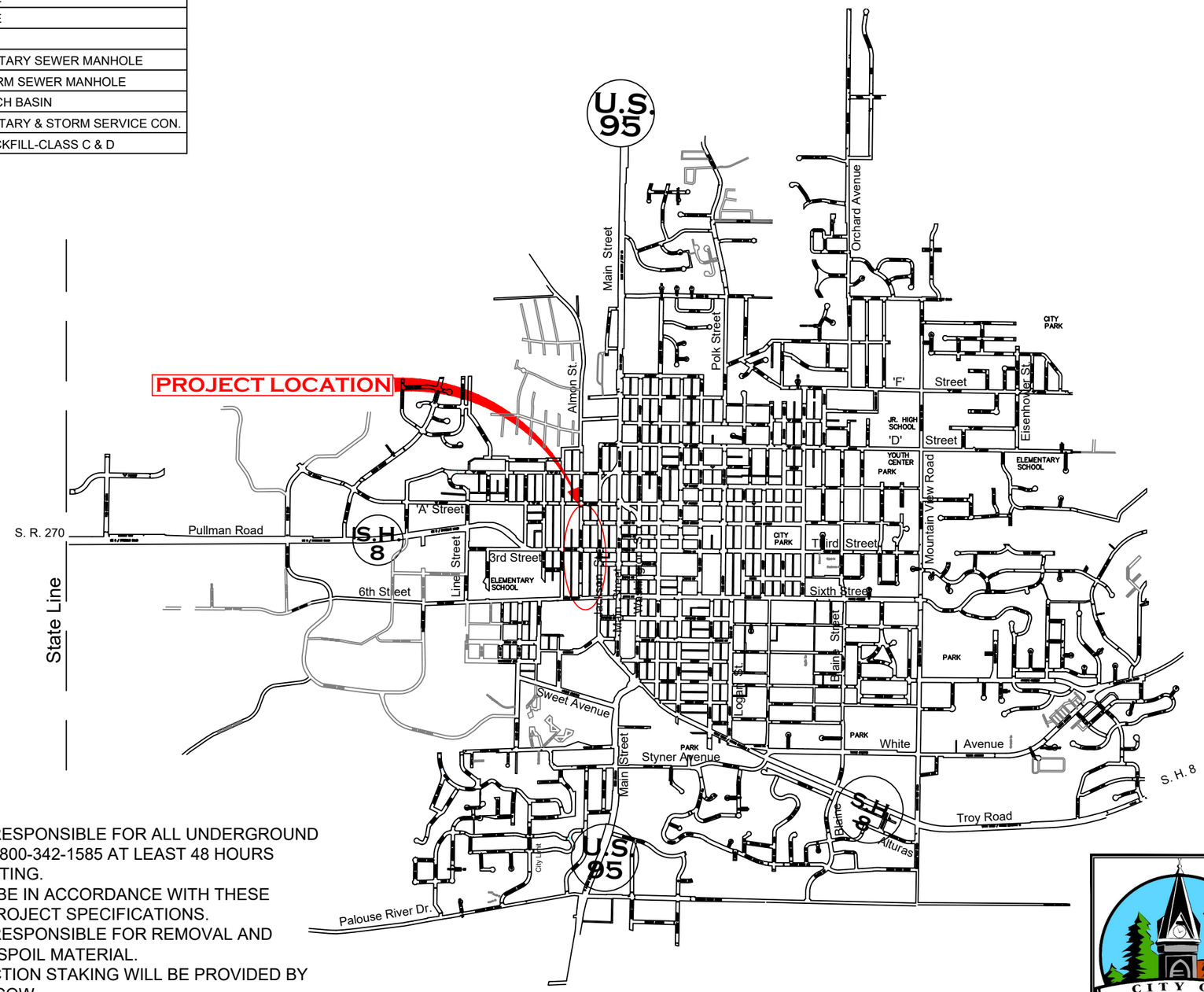

LEGEND

R/W	RIGHT OF WAY
T	UNDERGROUND TELEPHONE
TV	UNDERGROUND CABLE
FO	UNDERGROUND FIBER OPTIC
P	UNDERGROUND POWER
AP	AERIAL POWER
GAS	GAS LINE
W	EXISTING WATER LINE
WS	EXISTING WATER SERVICE LINE
SAN	EXISTING SANITARY SEWER
SS	EXISTING SEWER SERVICE
SFM	EXISTING SEWER FORCE MAIN
SAN	ABANDONED SANITARY SEWER
SS	ABANDONED SEWER SERVICE
SD	EXISTING STORM DRAIN
	EXISTING DRIVEWAY CULVERT
W	WATER MAIN
WS	WATER SERVICE
SD	STORM DRAIN
	CURB & GUTTER / TYPE A CURB
	EDGE OF ASPHALT
	EDGE OF GRAVEL
	FUTURE CURB
	FUTURE EDGE OF SW
	DITCH LINE
	EXISTING DITCH LINE
S	SIGN
S	SEWER MANHOLE
S	EXISTING SANITARY MANHOLE
	CATCH BASIN
	GATE VALVE
	BUTTERFLY VALVE
	FIRE HYDRANT
M	WATER METER
	POWER POLE
	UTILITY PEDESTAL

GENERAL NOTES:

1. CONTRACTOR IS RESPONSIBLE FOR ALL UNDERGROUND LOCATES. CALL 1-800-342-1585 AT LEAST 48 HOURS PRIOR TO EXCAVATING.
2. ALL WORK SHALL BE IN ACCORDANCE WITH THESE PLANS AND THE PROJECT SPECIFICATIONS.
3. CONTRACTOR IS RESPONSIBLE FOR REMOVAL AND DISPOSAL OF ALL SPOIL MATERIAL.
4. INITIAL CONSTRUCTION STAKING WILL BE PROVIDED BY THE CITY OF MOSCOW.
5. LOCATIONS OF EXISTING UTILITIES SHOWN ARE APPROXIMATE; CONTRACTOR TO FIELD VERIFY.

CITY OF MOSCOW
DEPARTMENT OF PUBLIC WORKS

ENGINEERING DEPARTMENT
221 E. 2ND STREET
(208) 883-7034

CITY ENGINEER
SCOTT BONTRAGER

Original Signed By:
Robert H. Buvel III
Date Original Sign:
04/26/2022
On File With:
City of Moscow
Engineering Division

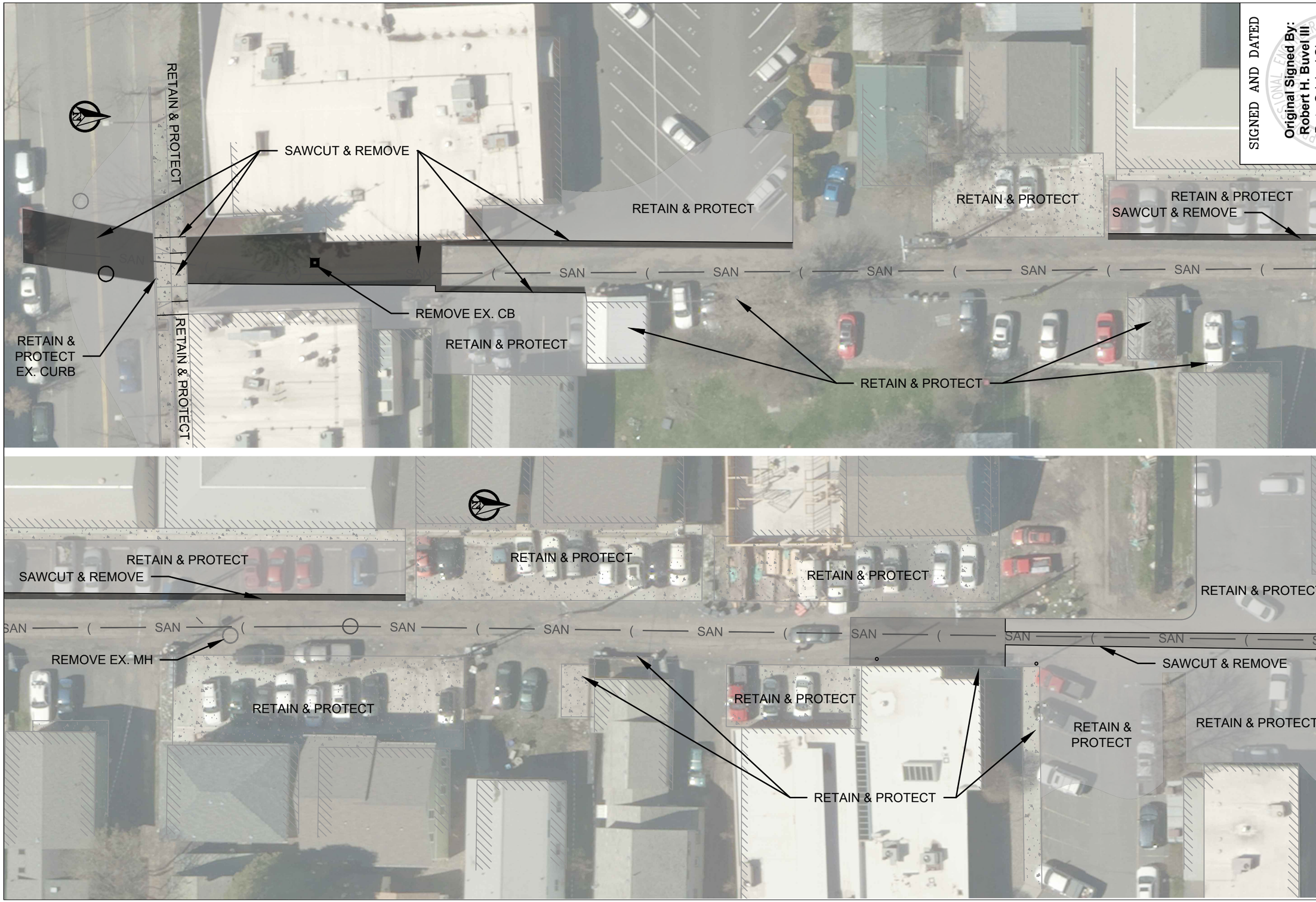

SIGNED AND DATED

Original Signed By:
Robert H. Buvel III
Date Original Sign:
04/26/2022
On File With:
City of Moscow
Engineering Division

DATE	DRAWN BY:	CHK'D. BY:

Job No.: – Almon Alley West Sewer_Final.dwg

ALMON ASBURY ALLEY PAVING PROJECT

DEMOLITION PLAN

PROJECT NO. 104-020

SCALE: 1" = 30'
DATE: 4/2022
DRAWN BY: B. BUVEL
CHK'D. BY: -

CITY OF MOSCOW
ENGINEERING DEPARTMENT
MOSCOW, IDAHO

SHEET 2 OF 13

SIGNED AND DATED

Original Signed By:
Robert H. Buvel III
Date Original Sign:
04/26/2022
On File With:
City of Moscow
Engineering Division

DATE	DRAWN BY:	CHK'D. BY:

Job No.: –

Almon Alley West Sewer_Final.dwg

ALMON ASBURY ALLEY PAVING PROJECT

DEMOLITION PLAN

PROJECT NO. 104-020

SCALE: 1" = 30'

DATE: 4/2022

DRAWN BY: B. BUVEL

CHK'D. BY: -

CITY OF MOSCOW
ENGINEERING DEPARTMENT
MOSCOW, IDAHO

SHEET 3 OF 13

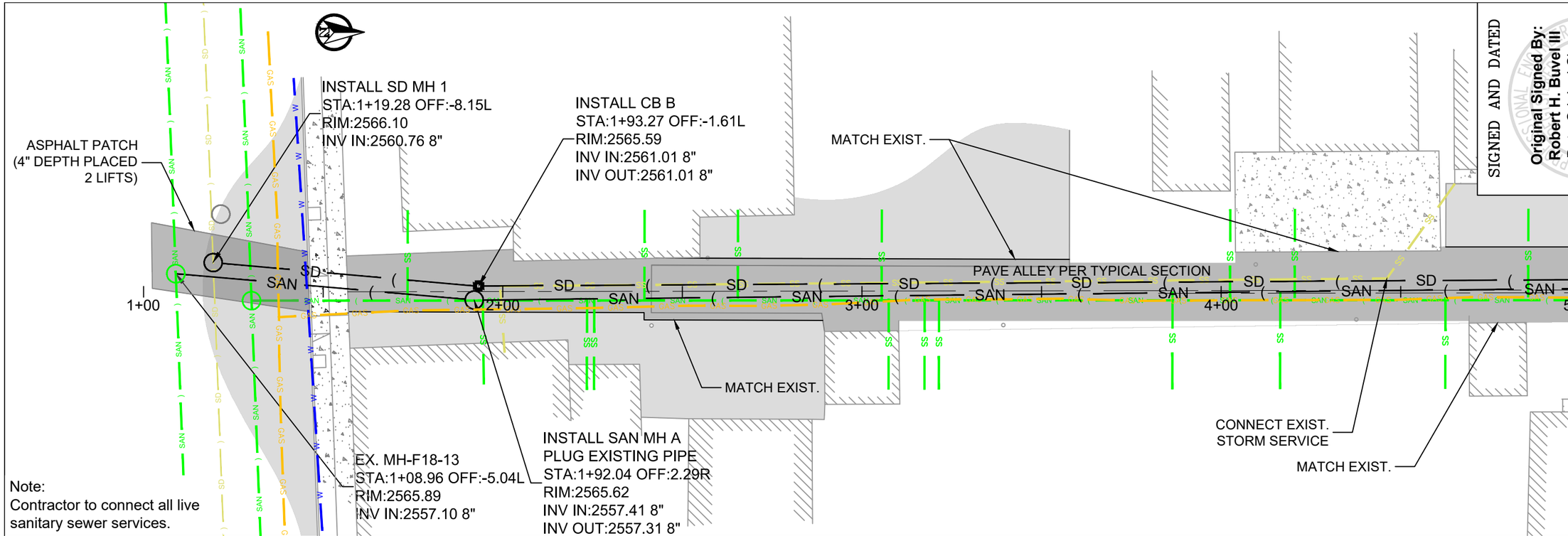

Note:
Contractor to connect all live sanitary sewer services.

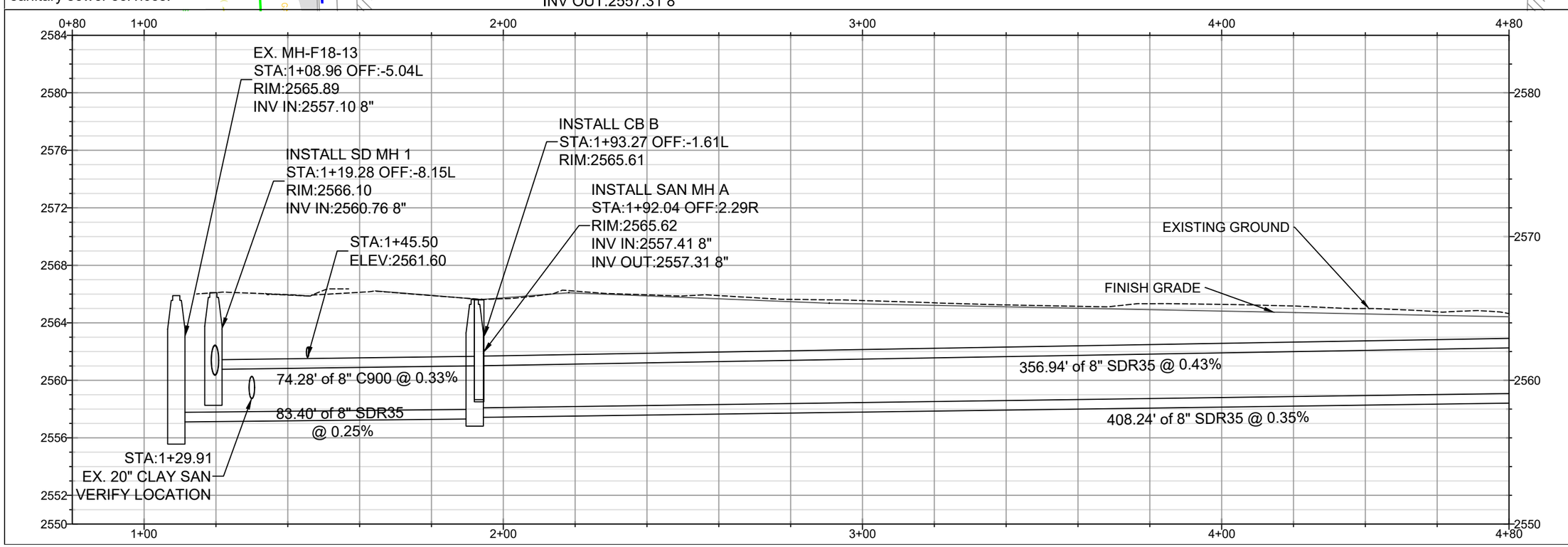

SIGNED AND DATED

Original Signed By:
Robert H. Buvel III
Date Original Sign:
04/26/2022
On File With:
City of Moscow
Engineering Division

DATE	DRAWN BY:	CHK'D. BY:

Job No.: 103-011 Almon Alley West Sewer_Final.dwg

ALMON ASBURY ALLEY PAVING PROJECT

PLAN & PROFILE

PROJECT NO. 104-020

SCALE: 1" = 40' H
1" = 20' V

DATE: 4/2022

DRAWN BY: B. BUVEL

CHK'D. BY:

CITY OF MOSCOW
ENGINEERING DEPARTMENT
MOSCOW, IDAHO

SHEET 4 OF 13

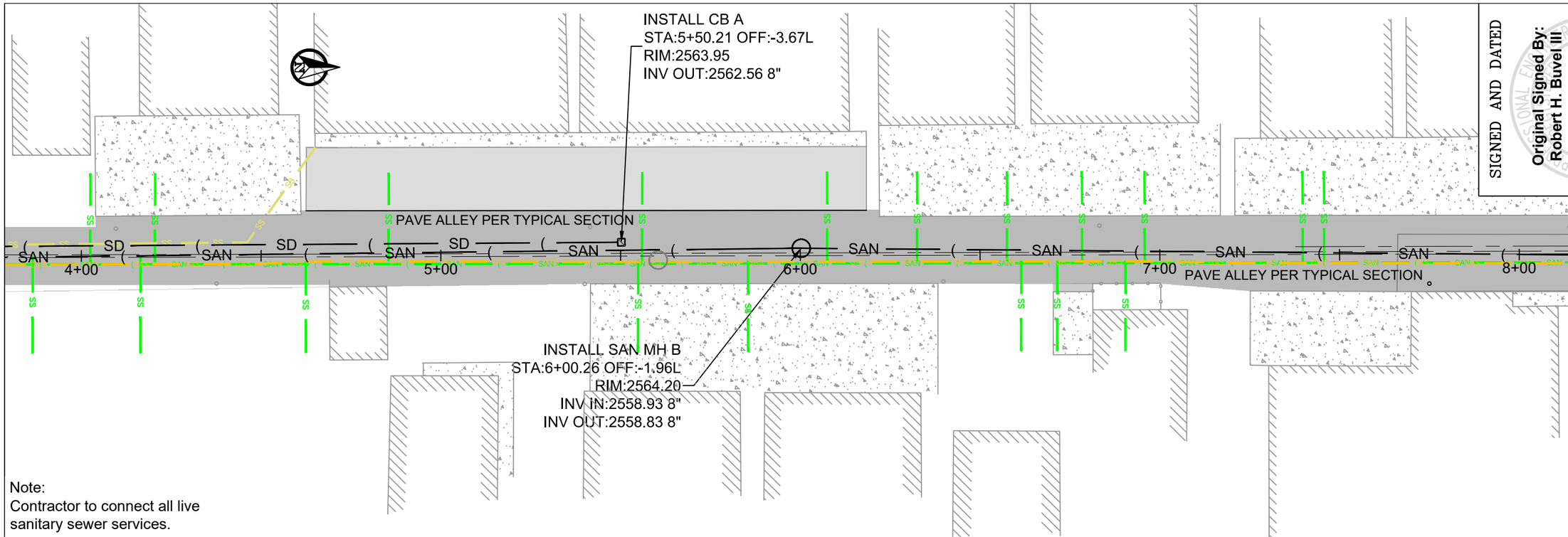

Note:
Contractor to connect all live sanitary sewer services.

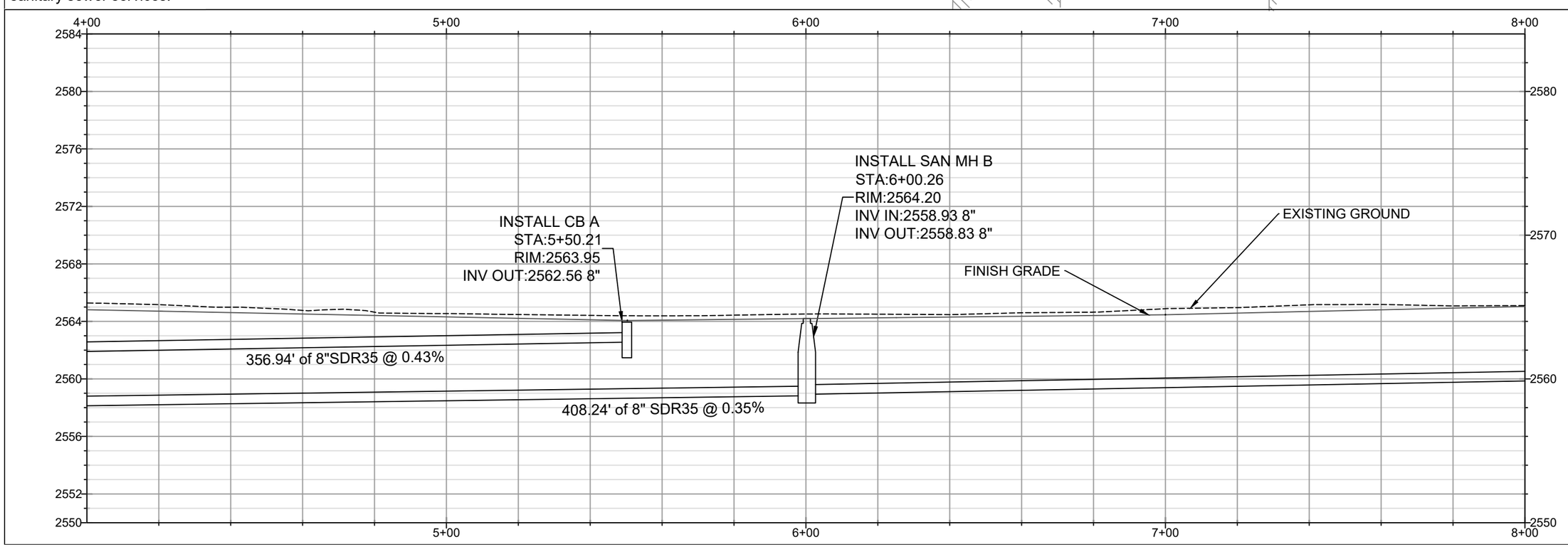

SIGNED AND DATED

Original Signed By:
Robert H. Buvel III
Date Original Sign:
04/26/2022
On File With:
City of Moscow
Engineering Division

DATE	DRAWN BY:	CHK'D. BY:

Job No.: 103-011 Almon Alley West Sewer_Final.dwg

ALMON ASBURY ALLEY PAVING PROJECT

PLAN & PROFILE

PROJECT NO. 104-020

SCALE: 1" = 40' H
1" = 20' V

DATE: 4/2022

DRAWN BY: B. BUVEL

CHK'D. BY:

CITY OF MOSCOW
ENGINEERING DEPARTMENT
MOSCOW, IDAHO

SHEET 5 OF 13

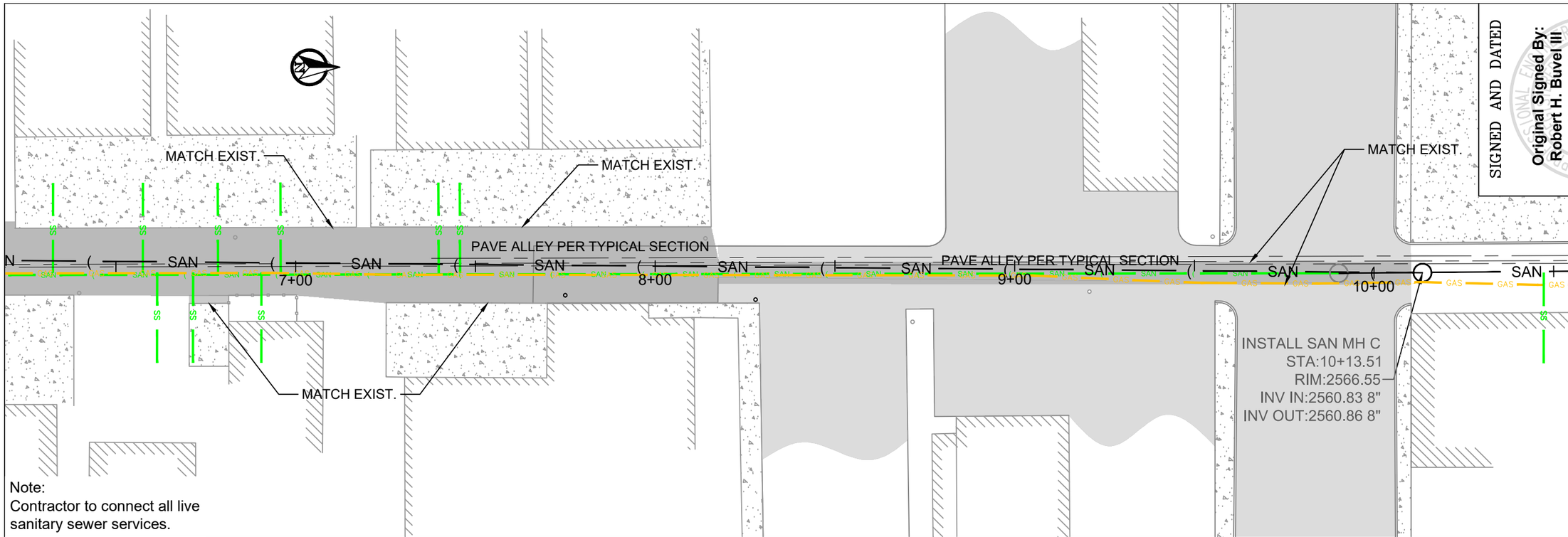

Note:
Contractor to connect all live sanitary sewer services.

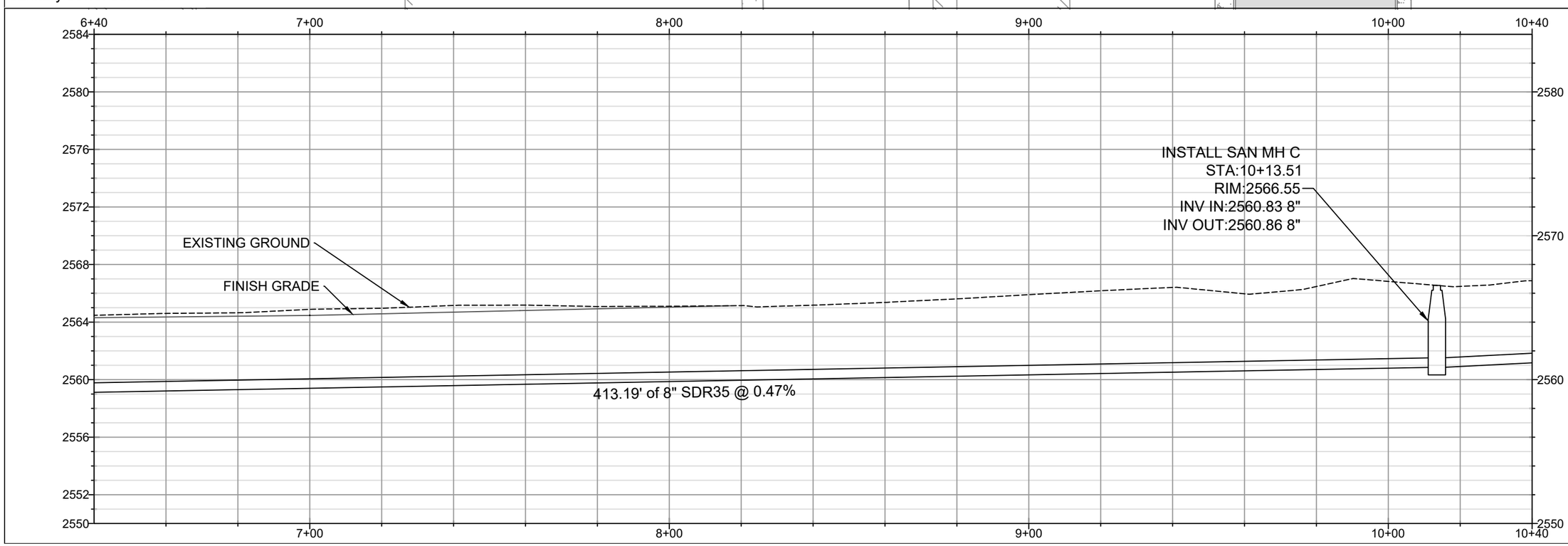

SIGNED AND DATED

Original Signed By:
Robert H. Buvel III
Date Original Sign:
04/26/2022
On File With:
City of Moscow
Engineering Division

DATE	DRAWN BY:	CHK'D. BY:

Job No.: 103-011 Almon Alley West Sewer_Final.dwg

ALMON ASBURY ALLEY PAVING PROJECT

PLAN & PROFILE

PROJECT NO. 104-020

SCALE: 1" = 40' H
1" = 20' V

DATE: 4/2022

DRAWN BY: B. BUVEL

CHK'D. BY:

CITY OF MOSCOW
ENGINEERING DEPARTMENT
MOSCOW, IDAHO

SHEET 6 OF 13

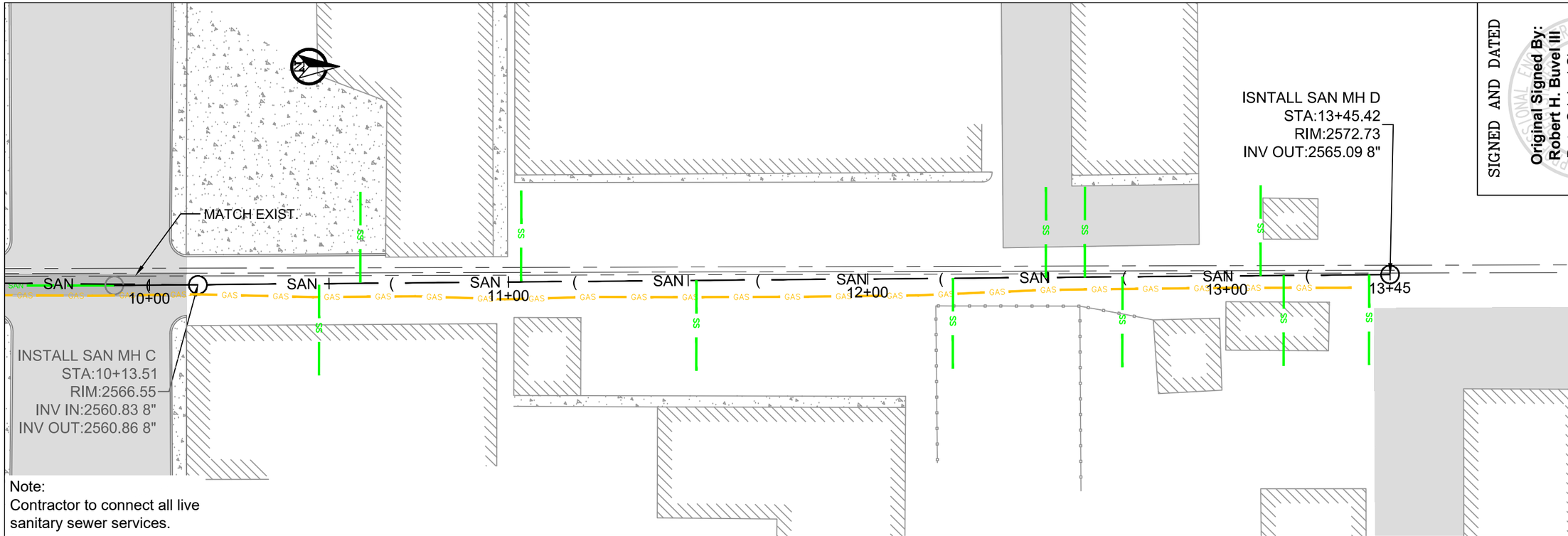

Note:
Contractor to connect all live sanitary sewer services.

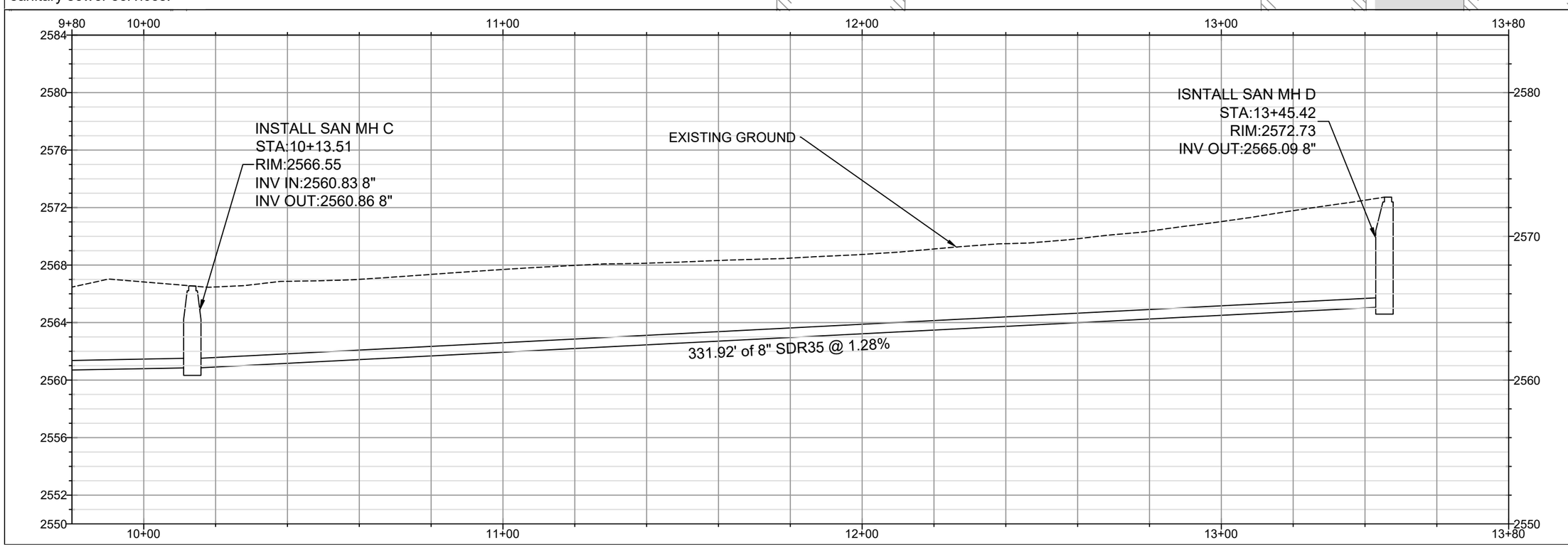

SIGNED AND DATED

Original Signed By:
Robert H. Buvel III
Date Original Sign:
04/26/2022
On File With:
City of Moscow
Engineering Division

DATE	DRAWN BY:	CHK'D. BY:

Job No.: 103-011 Almon Alley West Sewer_Final.dwg

ALMON ASBURY ALLEY PAVING PROJECT

PLAN & PROFILE

PROJECT NO. 104-020

SCALE: 1" = 40' H
1" = 20' V

DATE: 4/2022

DRAWN BY: B. BUVEL

CHK'D. BY:

CITY OF MOSCOW
ENGINEERING DEPARTMENT
MOSCOW, IDAHO

SHEET 7 OF 13

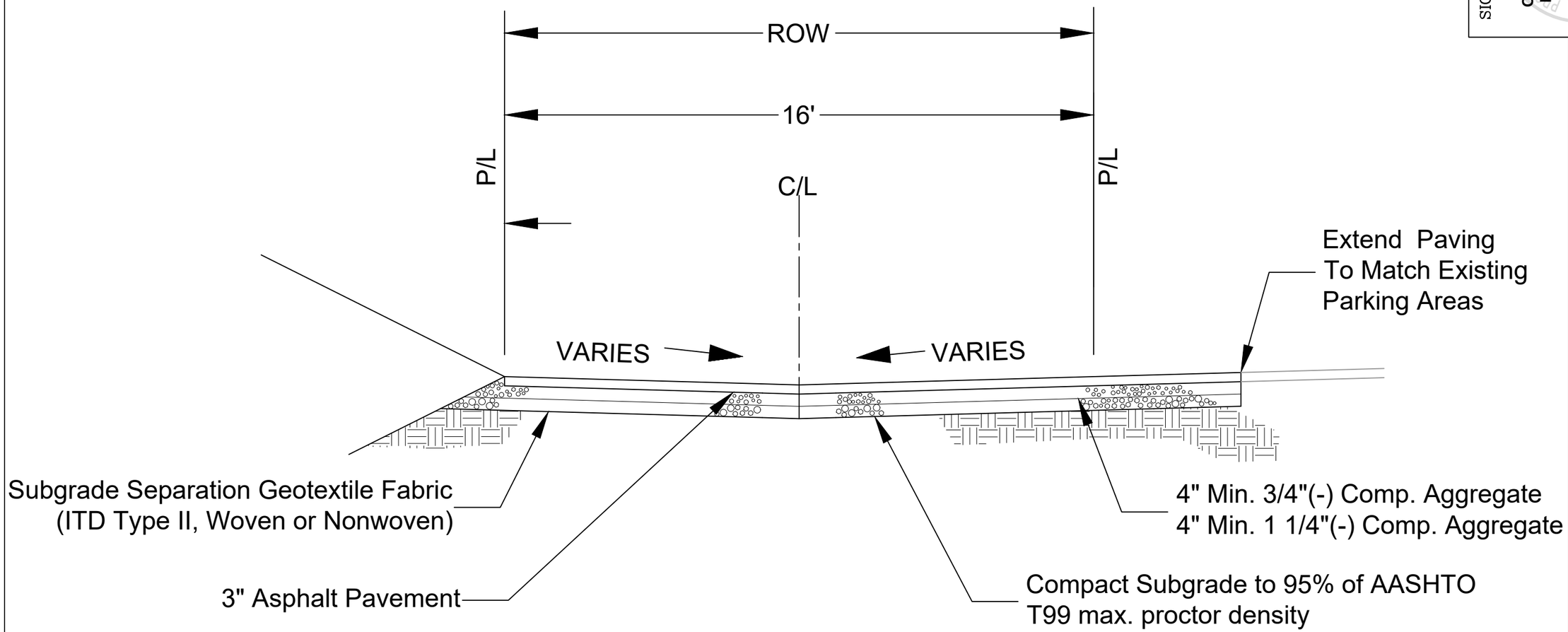

TYPICAL SECTION

SIGNED AND DATED

Original Signed By:
Robert H. Buvel III
Date Original Sign:
04/26/2022
On File With:
City of Moscow
Engineering Division

DATE	DRAWN BY:	CHK'D. BY:

Job No.: – Almon Alley West Sewer_Final.dwg

ALMON ASBURY ALLEY PAVING PROJECT

TYPICAL SECTION

PROJECT NO. 104-020

SCALE: N.T.S.
DATE: 4/2022
DRAWN BY: B. BUVEL
CHK'D. BY: -

CITY OF MOSCOW
ENGINEERING DEPARTMENT
MOSCOW, IDAHO

SHEET 8 OF 13

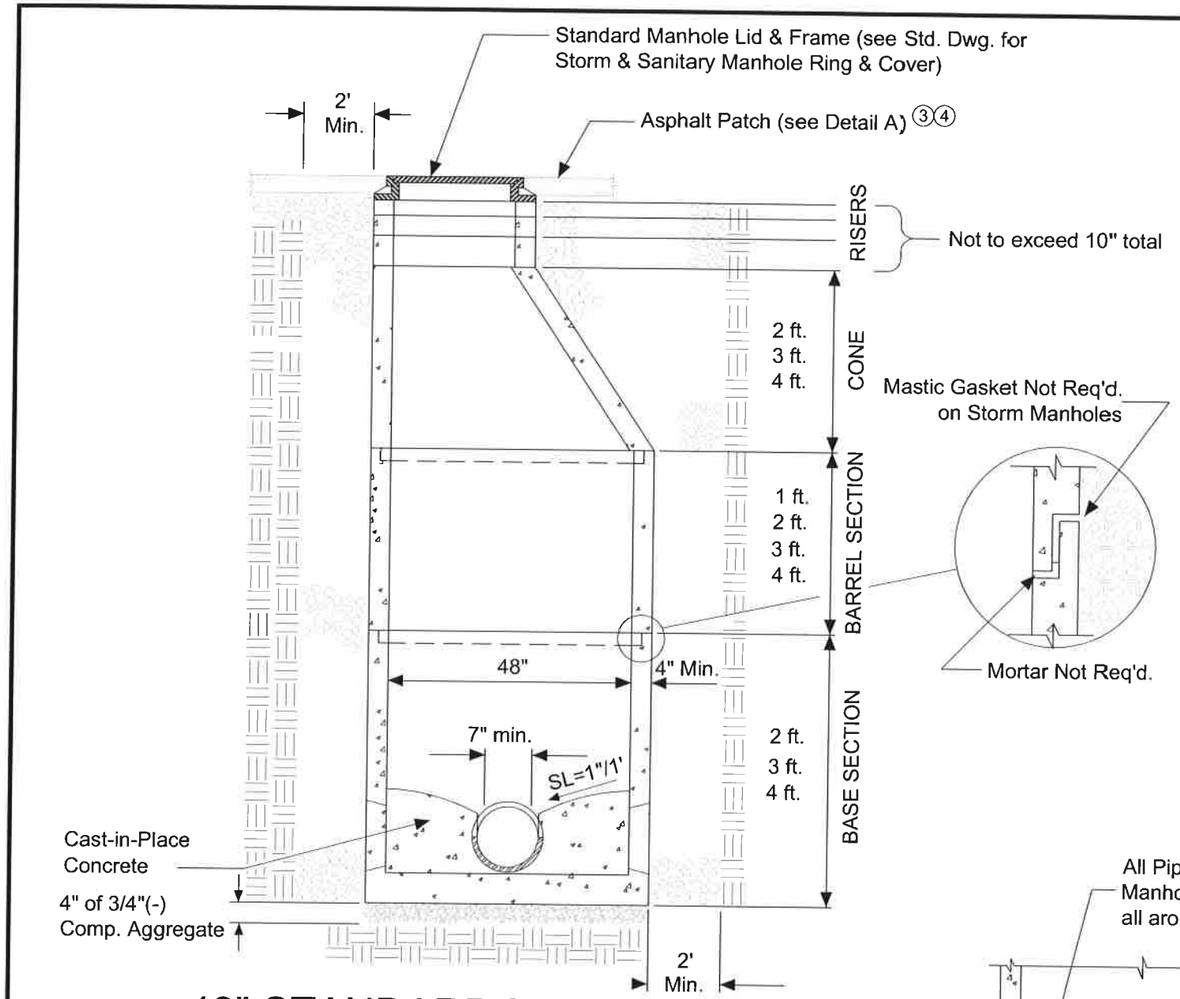

48" STANDARD MANHOLE w/ PRECAST BASE

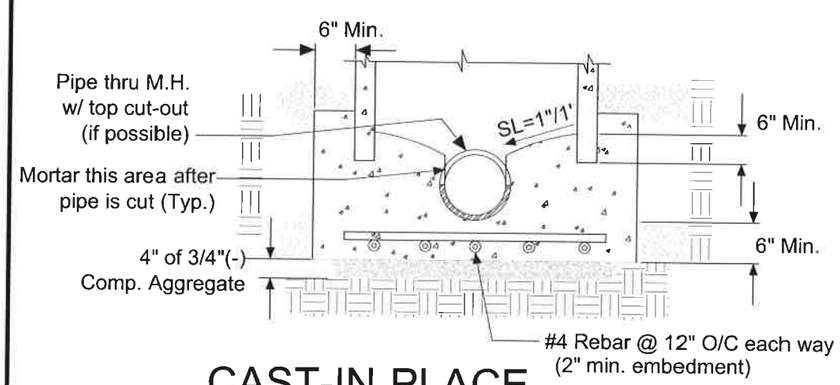

CAST-IN-PLACE ALTERNATE BASE

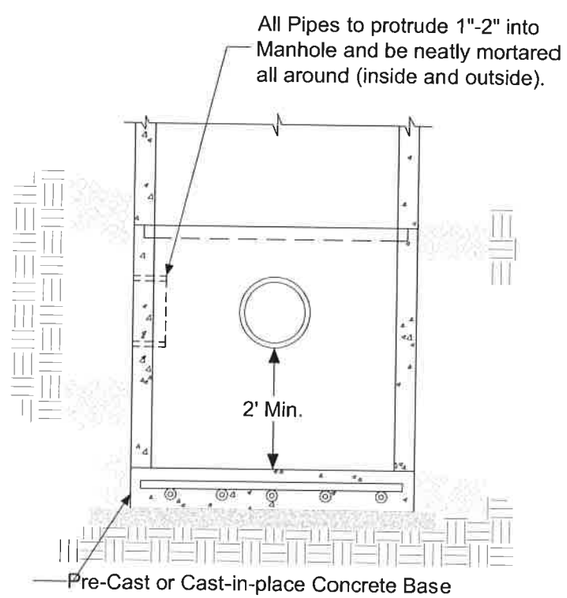

MANHOLE w/ CATCH BASE

NOTES:

1. Precast bases are preferred.
2. Steps shall not be installed in the manholes.
3. Manholes located in paved areas shall have asphaltic hot mix patch four inches (4") thick with top course mix restoring surface to exact line and grade of street. Manhole lids in new pavement shall be raised and adjusted to finished grade after completion of street paving.
4. Manholes located in unpaved streets or alleys shall have their lids adjusted to two inches (2") below gravel surface.
5. All cast-in-place concrete shall be troweled very smooth.
6. All joints between precast manhole/sections shall be very smooth.
7. All flow across manholes shall be on-tenth of a foot (0.1') fall, unless the flow changes direction more than 45°, then the fall shall be two-tenths of a foot (0.2') or greater.
8. Channels shall be as per Standard Drawing for Manhole Base Details.
9. Lids shall be set a quarter inch ($\frac{1}{4}$") below the existing paved street grade.
10. Flat slab top allowed on shallow manholes.
11. Contractors shall comply with the most current OSHA requirements for excavation.
12. WSDOT Catch Basin Type 2 may be required at certain locations by the City Engineer in place of this manhole standard.

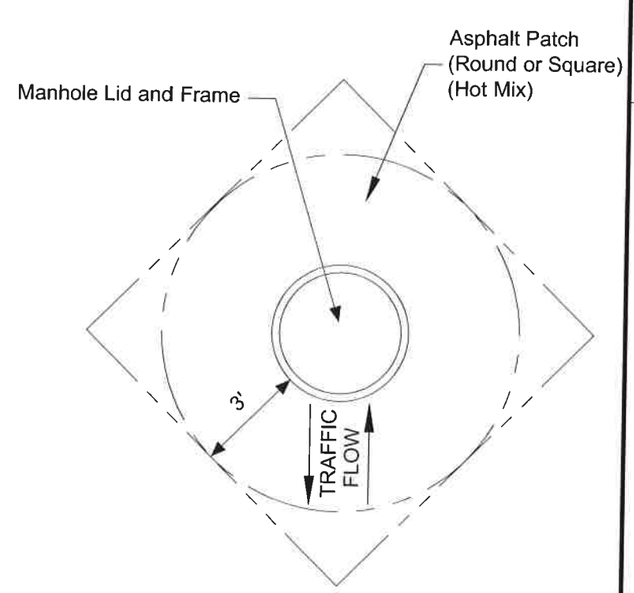

A ASPHALT PATCH DETAIL

REVISIONS	
DATE	DESCRIPTION

SIGNED AND DATED

PROFESSIONAL ENGINEER REGISTERED 8832 5-19-14 STATE OF IDAHO KEVIN LILLY

DRAFTED BY: CEE/KWK	CHECKED BY: K.Lilly
DRAWING SCALE: NTS	DATE: 3-4-2014

STORM SEWER MANHOLE

CITY OF MOSCOW
ENGINEERING DEPARTMENT

DRAWING NUMBER: 21

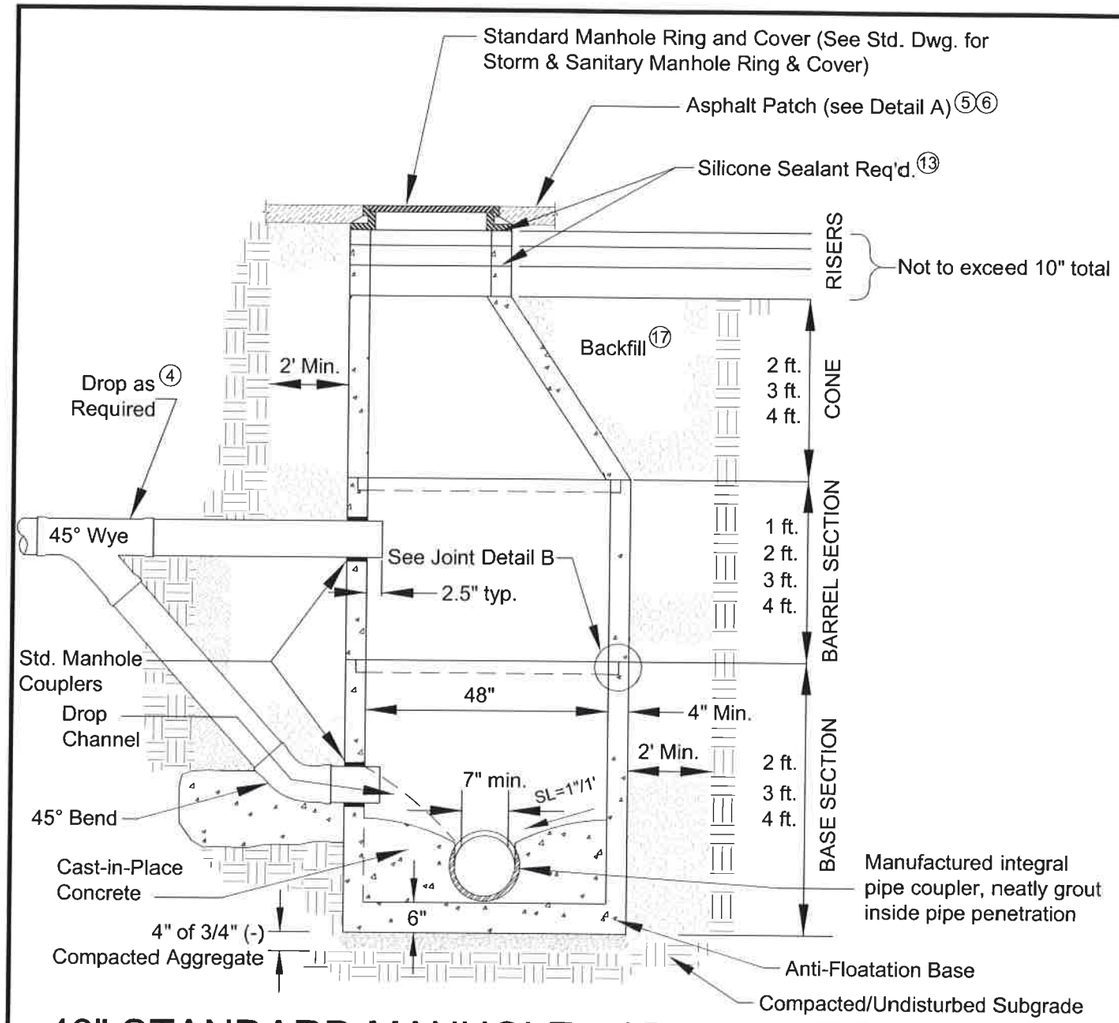

48" STANDARD MANHOLE w/ PRECAST BASE

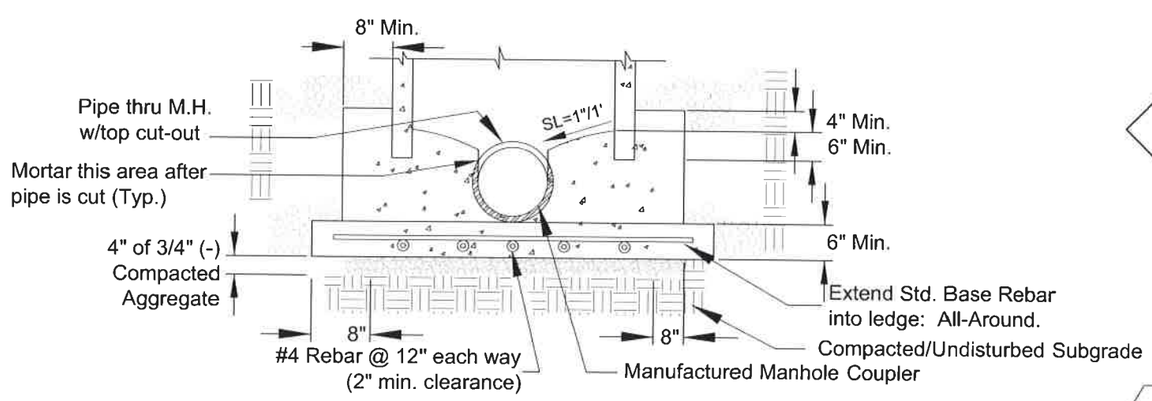

CAST-IN-PLACE ALTERNATE BASE

NOTES:

1. Precast bases with integral pipe couplers are preferred.
2. Manholes shall be constructed watertight and tested per Standard Construction Specifications.
3. Steps shall not be installed in the manholes.
4. Drop configuration is used when the entrance pipe exceeds two feet (2') above the the top of the exit pipe and only with permission of the City Engineer. Drop pipe penetrations shall be neatly mortared. Drop configuration not allowed in new manhole installations.
5. Manholes located in paved areas shall have asphaltic patch four inches (4") thick placed in two lifts to exact line and grade of street. Manhole ring shall be 1/4" below finished patch.
6. Manholes located in unpaved streets or alleys shall have lid adjusted two inches (2") below gravel surface.
7. All cast-in-place conc. shall be troweled smooth.
8. All joints between precast manhole/sections shall be sealed with mastic gaskets and finished with mortar.
9. All flow across manholes shall be one-tenth of a foot (0.1'), unless the flow changes direction more than 45°, then the fall shall be two-tenths of a foot (0.2') or greater.
10. Manufactured watertight manhole couplings required at all pipe penetrations.
11. Channels shall be per Manhole Base Details Standard Drawing.
12. Shallow manholes may be constructed with flat-top precast lids,as approved by the City Engineer.
13. Seal between riser and cone, riser and riser, and riser and frame with two parallel 3/8" diameter beads of silicone sealant.
14. Where new manholes are constructed on existing mains, or where existing manholes are modified, all pipe penetrations shall also be sealed on the exterior by the careful and ample application(s) of mon-shrink grout. Groutable manufactured collars shall be used on new pipes where they enter existing manholes.
15. Manufacturer's standard O-ring joint also acceptable alternate to the standard mastic gasket and mortar joints as shown.
16. Contractor shall comply with the most current OSHA requirements for excavations.
17. Backfill around manholes shall be Class 'D' for all roadways and alleys; Class 'A' for all other locations unless specifically allowed or directed otherwise by the City Engineer.

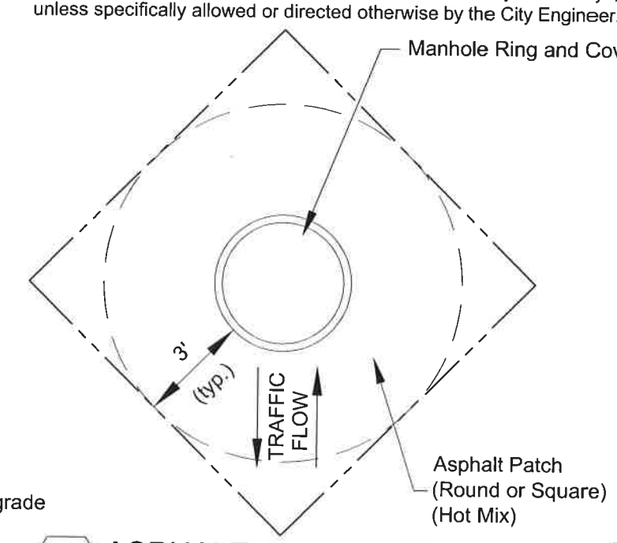

A ASPHALT PATCH DETAIL

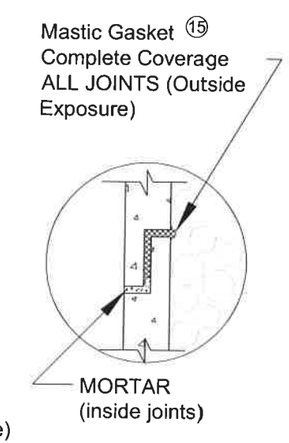

B JOINT DETAIL

REVISIONS	
DATE	DESCRIPTION

SIGNED AND DATED

PROFESSIONAL ENGINEER REGISTERED 8832 5-19-14 STATE OF IDAHO KEVIN LILLY

DRAFTED BY: CEE/KWK	CHECKED BY: K.Lilly
DRAWING SCALE: NTS	DATE: 3-4-2014

SANITARY SEWER MANHOLE

CITY OF MOSCOW
ENGINEERING DEPARTMENT

DRAWING NUMBER: 22

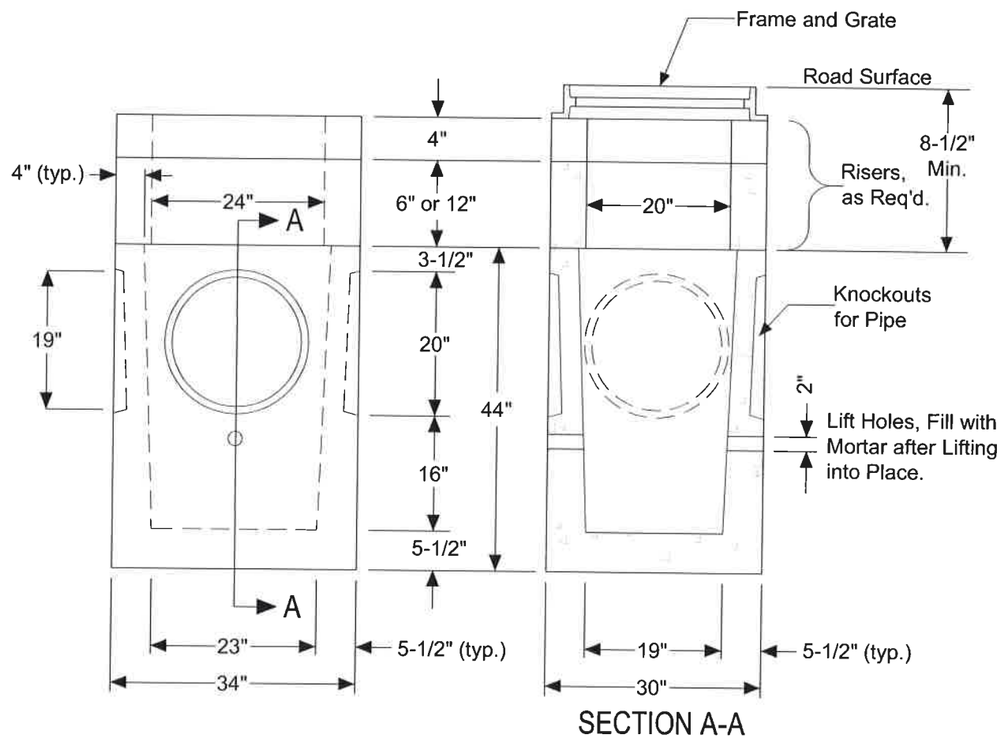

SECTION A-A

CATCH BASIN

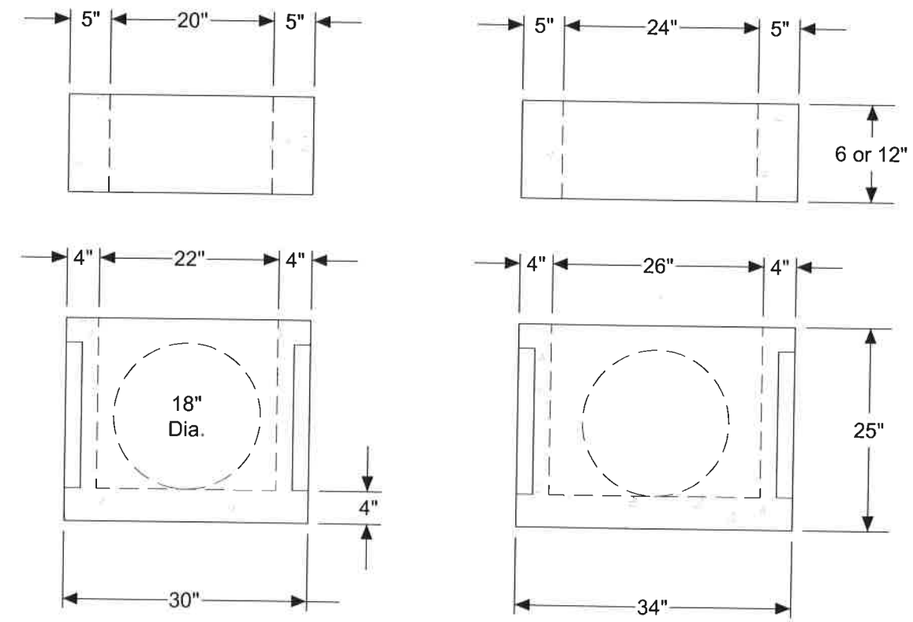

CATCH INLET

NOTES:

1. Catch Basins shall be used in all City streets, City parking lots, and City alleys for catchment and conveyance of surface runoff. Catch Inlets are not to be used in these locations unless specifically allowed by the City Engineer.
2. Catch Basin shall be precast concrete per WSDOT Catch Basin Type 1 and Catch Inlets per WSDOT Concrete Inlet, unless otherwise approved by the City Engineer.
3. Catch Basins located in paved areas shall have asphaltic patch four inches (4") thick (in two lifts) restoring surface to original line and grade. (see note 6)
4. Catch basins located in gravel streets or alleys shall have grate adjusted two inches (2") below gravel surface.
5. All pipes shall protrude 1"-2" into the basin and shall be neatly mortared all around (inside and outside). Exit pipe to manhole or storm main shall have 1'-6" minimum cover.
6. Catch Basins shall be set 0.10 foot lower than adjoining street grade.
7. All materials shall be manufactured in the U.S.A.
8. Catch Basins and Inlets shall be pre-cast concrete conforming to AASHTO M199 or ASTM C478, as shown.
9. Catch Basins and Inlets shall be backfilled to grade as per adjoining pipe trench backfill.
10. Catch Inlets may only be used as a 'bubbler', area drain, or where clearance over some particular obstacle is necessary and if approved by the City Engineer.
11. Frames and Grates shall be as per the Catch Basin & Catch Inlet Gates and/or the Combination Inlet Standard Drawing.

REVISIONS	
DATE	DESCRIPTION

SIGNED AND DATED

PROFESSIONAL ENGINEER REGISTERED 8832 STATE OF IDAHO KEVIN LILLY 5-19-14

DRAFTED BY: MAS/KWK
CHECKED BY: K.Lilly
DRAWING SCALE: NTS
DATE: 3-4-2014

CATCH BASIN & CATCH INLET

CITY OF MOSCOW
ENGINEERING DEPARTMENT

DRAWING NUMBER: 26

Sanitary Sewer House Connection

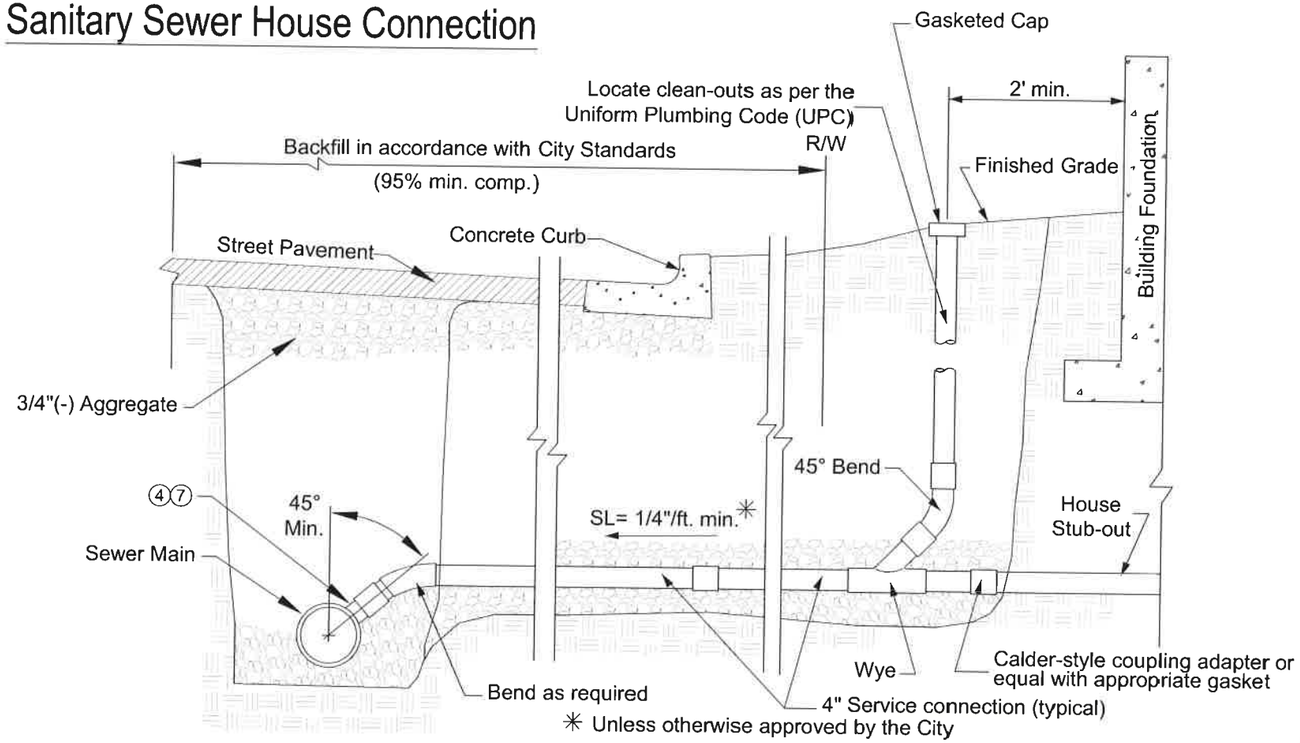

Sanitary & Storm Sewer Service Laterals (Stubs)

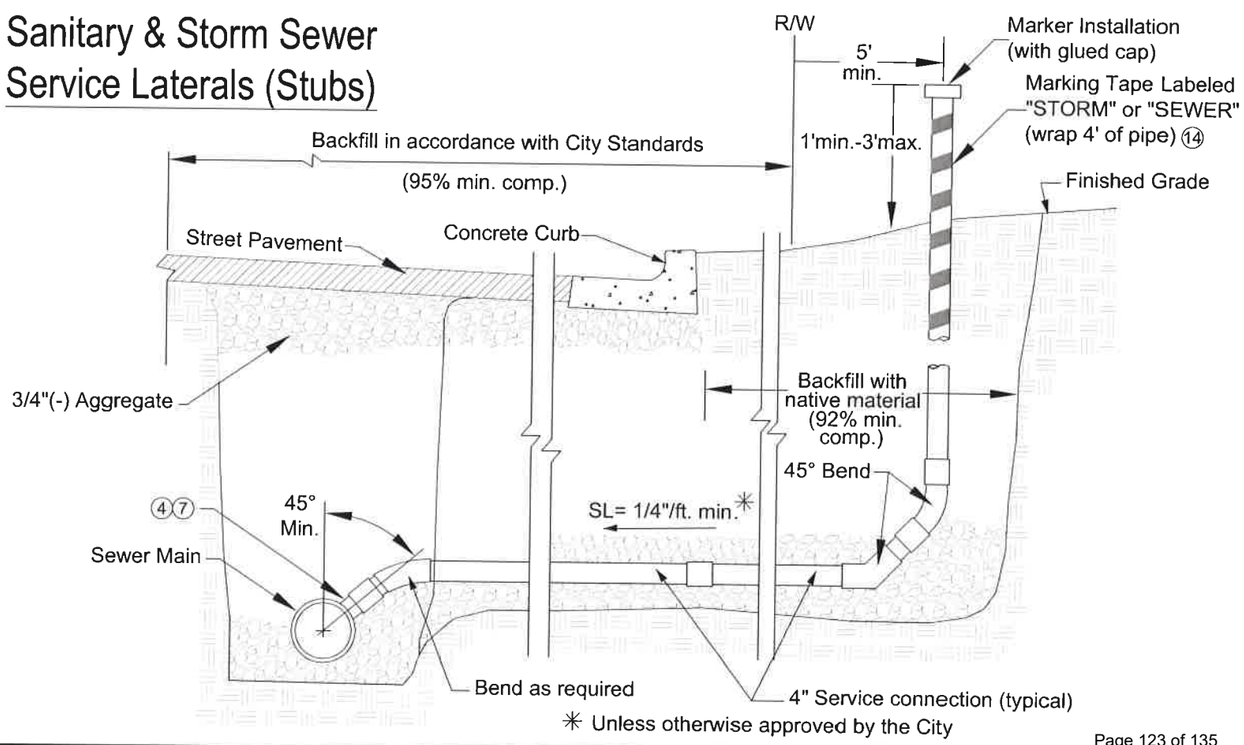

NOTES:

1. Pipe materials shall be as follows:
   a. Within public right-of-way: SDR 35 PVC, (ASTM D-3034), with integral gasketed bell and spigot joints.
   b. From right-of way to within two feet (2') of the house: SDR 35 PVC, (ASTM D-3034), with integral gasketed bell and spigot joints or Schedule 40 ABS plastic pipe with glued fittings.

   If the water service line and sanitary or storm drain service lines from the right-of-way to the house are installed in the same trench, the piping material shall be Schedule 40 ABS with glued fittings unless all three of the following requirements are met:
   a. The bottom of the water pipe, at all joints, shall be at least twelve inches (12") above the top of the sanitary or storm drain service line.
   b. The water pipe shall be placed on a solid shelf, excavated at one side of the common trench, with a minimum clear horizontal distance of at least twelve inches (12") from the sanitary or storm drain service line.
   c. Where the sanitary or storm drain line crosses the water service line, the top of the sanitary or the storm drain line is a minimum of twelve inches (12") below the water service line.
2. Trench bottom to be prepared, as required, for a firm bed.
3. Existing sewer mains shall be tapped by the City, at the Owner's expense.
4. Sewer service laterals shall be connected to the new mains with manufactured wyes. Connection to existing mains require ROMAC 'CB' saddles, or equivalent.
5. Owner to obtain the necessary permits from the Moscow Community Development Department and Public Works Department.
6. This work shall comply with the Uniform Plumbing Code (UPC).
7. Sewer services shall connect to the sanitary sewer main at a point above the centerline of the pipe.
8. Construction to be inspected by the City.
9. Sanitary service laterals (stubs) shall be air tested with the sanitary sewer main.
10. All backfill under sidewalks shall be crushed aggregate. (95% minimum compaction)
11. The service lateral (from main to house) shall be bedded in sand or 3/4"(-) crushed aggregate; from two inches (2") under the pipe to two inches (2") over the pipe.
12. SANITARY service laterals shall be green pipe from the main to the house, including stub outs and markers.
13. STORM service laterals shall be white pipe from the main to the house, including stub outs and markers.
14. Marking tape shall be three inch (3") wide commercially manufactured, and labeled "STORM DRAIN" for storm sewer and "SEWER" for sanitary sewer use.
15. Storm drain and sanitary sewer services (private) located within public street right-of-way or public utility easements shall have a 2.5' minimum burial depth unless specifically allowed otherwise by the City Engineer.

REVISIONS	
DATE	DESCRIPTION

SIGNED AND DATED

PROFESSIONAL ENGINEER REGISTERED 8832 5-19-14 STATE OF IDAHO KEVIN LILLY

DRAFTED BY: KWK
CHECKED BY: K.Lilly
DRAWING SCALE: NTS
DATE: 2-3-2012

SANITARY & STORM SEWER SERVICE CONNECTIONS

CITY OF MOSCOW
ENGINEERING DEPARTMENT

DRAWING NUMBER: 28

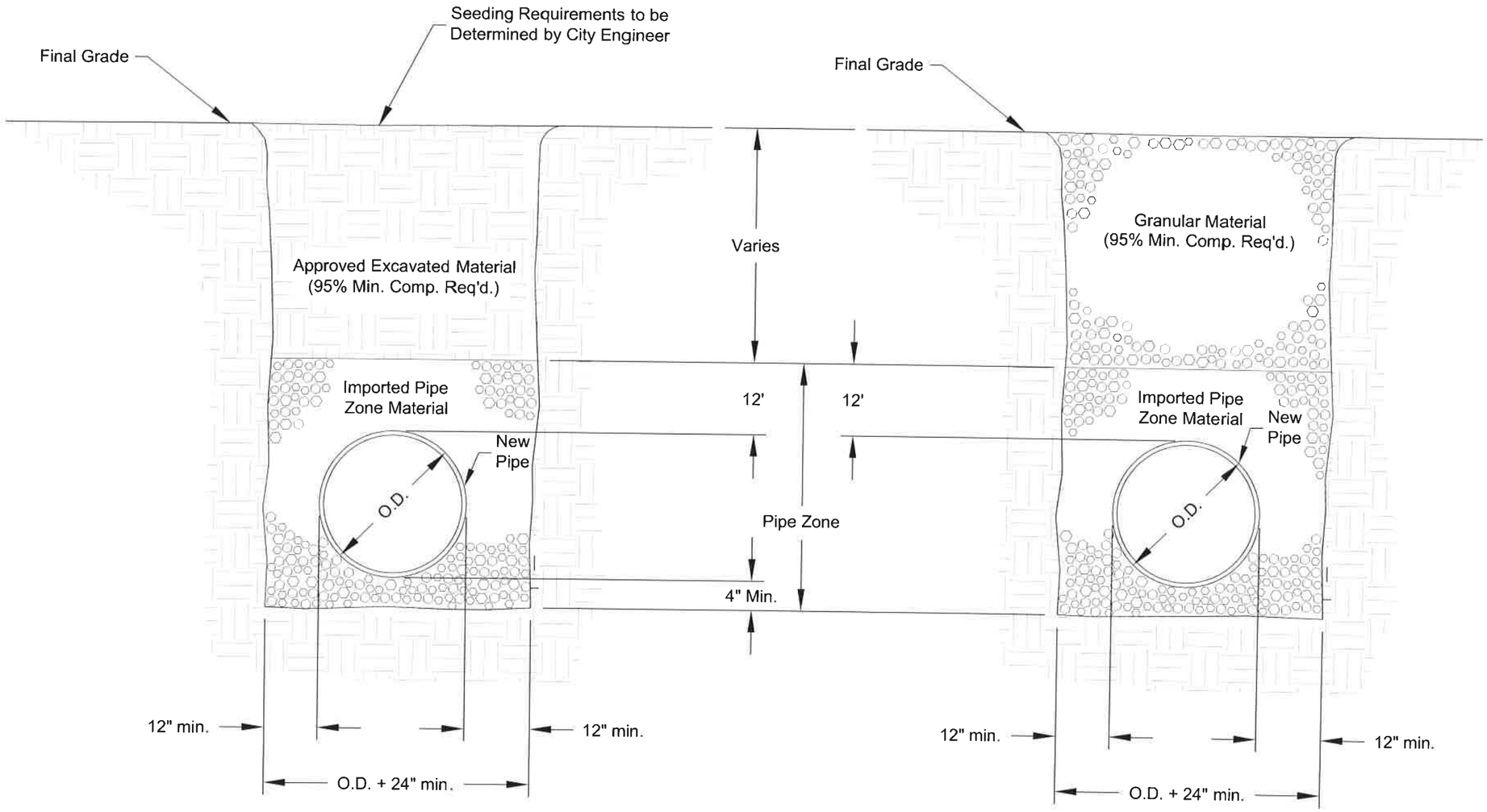

BACKFILL CLASS C
TYPICAL SECTION

BACKFILL CLASS D
TYPICAL SECTION

NOTES:

1. Class 'C' Backfill shall be used in areas where asphalt pavement, concrete curb, sidewalk, driveway, or gravel surfacing is not anticipated and where topsoil is not required.

2. Class 'D' Backfill is for areas where asphalt pavement, concrete, curb, sidewalk, or gravel surfacing is existing or anticipated.

3. Contractor shall comply with the most current OSHA requirements for excavations.

4. Backfill shall comply with the requirements of the City's Standard Construction Specifications.

REVISIONS	
DATE	DESCRIPTION

SIGNED AND DATED

PROFESSIONAL ENGINEER REGISTERED 8832 STATE OF IDAHO KEVIN LILLY 5-8-14

DRAFTED BY: K.Kipp/C.Edwards
CHECKED BY: K.Lilly
DRAWING SCALE: NTS
DATE: 3-5-2014

BACKFILL CLASS C & D

CITY OF MOSCOW
ENGINEERING DEPARTMENT

DRAWING NUMBER: 33b

TO: Mayor and City Council
City of Moscow, Idaho

Date: 11/15/22

This proposal is submitted as an offer by the undersigned to enter into contract with the City of Moscow, Idaho as represented by the City Council, herein referred to as the 'CITY' for ALMON ASBURY ALLEY PAVING PROJECT, (hereinafter "Project") specified herein and which construction documents are on file with the City Division, Haddock Building, 504 South Washington Street, Moscow, Idaho, and which are a condition hereof with the same force and effect as though they were attached hereto. The offer is conditioned on the following declarations as to the facts, intention and understanding of the undersigned and the agreement of the CITY to the terms and prices herein submitted.

1. All Project specifications and drawings examined by the undersigned and their terms and conditions are hereby agreed to.

2. The undersigned certifies that he/she has received or made himself/herself aware of any and all existing site conditions that may affect the proposed work.

3. It is understood that the contract drawings may be supplemented by additional drawings and specifications in explanation and elaboration of the contract drawings and it is agreed that such supplemental drawings, when not in conflict with those referred to in paragraph 1 above, will have the same force and effect as if attached hereto and that when received they will be considered a part of the contract.

4. The undersigned will furnish separate performance and payment bonds in the full amount of the contract price.

5. The cash, certified check, bid bond, or cashier's check accompanying this proposal shall be forfeited to the City of Moscow to the extent of 5% of the amount bid if the undersigned shall fail or refuse to execute the contract, furnish performance and payment bonds, and insurance certificate as required by the specifications within the time limit therein after notification that the said proposal is accepted, all in accordance with the provisions of this proposal and the specifications.

6. The undersigned further agrees that the CITY shall have the right to accept or reject any bid item deemed to be in the best interest of the CITY.

7. The undersigned agrees to order all necessary equipment and materials within a period of three (3) days after Notice to Proceed has been issued by the City Engineer.

8. The undersigned, as a bidder, acknowledges that Addenda Number 1 through 1 have been delivered to him/her and have been examined as part of the contract documents.

9. The undersigned agrees to complete all work embraced in the contract within the time limitations set forth in paragraph IB-13 of the Instruction to Bidders.

10. The undersigned holds Idaho State Public Works Contractor's License Number 10880-unlimited-1-2-3

11. The undersigned proposes to use the following subcontractors in the performance of meeting the contract requirements. Information herein must comply with Idaho Code Section 67-2310 and IB-16:

Subcontractors	Trade Specialty	Idaho Public Works License No.	$ Amount
a. Curtis Concrete	Concrete	012865-A-4	2,500
b.			
c.			
d.			
e.			

12. The undersigned proposes to furnish labor, materials, equipment and services of all kinds required for ALMON ASBURY ALLEY PAVING PROJECT, as described in the specifications, including all appurtenant work, all as required by the specifications and this proposal for the prices in accordance with the completed schedule contract prices as followed in the Bid Schedules.

BASE BID SCHEDULE – Almon Asbury Alley Paving Project

Item		Base Bid			
Bid Item No.	Description	Item Quantity	Units	Unit Price	Total Value of Item ($)
1	***Earthwork***				
SP1.1	Remove and Dispose of Bituminous Surface	523	SY	20-	10,460.00
SP1.2	Remove and Dispose of Concrete Driveway Approach	21	SY	50-	1,050.00
SP1.3	Remove and Dispose of Manhole	3	EA	3,500-	10,500.00
SP1.4	Excavation (plan quantity)	260	CY	46-	11,960.00
2	***Sewer***				
SP2.1	Sanitary Sewer Manhole (4' Diameter)	4	EA	6,200-	24,800.00
SP2.2	8-Inch PVC Sanitary Sewer Pipe (Class D Backfill)	1237	LF	195-	241,215.00
SP2.3	Existing Sanitary Service Connection	39	EA	1,100-	42,900.00
SP2.4	Sanitary Sewer Bypass	1	LS	32,000-	32,000.00
3	***Storm***				
SP3.1	Catch Basin	2	EA	3,200-	6,400.00
SP3.2a	8-Inch Storm Sewer Pipe (Class D Backfill)	357	LF	130-	46,410.00
SP3.2b	8-Inch C900 Storm Sewer Pipe (Class D Backfill)	75	LF	155-	11,625.00
SP3.3	Existing Storm Service Connection	2	EA	1,000-	2,000.00
SP3.4	Storm Sewer Manhole w/ Cast-In-Place Base (4' Diameter)	1	EA	6,500-	6,500.00
4	***Concrete***				
SP4.1	Reinforced Driveway Approach	21	SY	190-	3,990.00
5	***Roadway***				
SP5.1	1/2" Superpave HMA Pavement	310	TON	215-	66,650.00
SP5.2	3/4" Crushed Rock Base	465	TON	45-	20,925.00
SP5.3	1-1/4" Crushed Rock Base	50	TON	45-	2,250.00
SP5.4	Subgrade Separation Geotextile	1392	SY	3	4,176.00
SP5.5	Soft Spot Repair	50	SY	40-	2,000.00
6	***BMPs***				
SP6.1	Inlet Protection	6	EA	100-	600.00
SP6.2	Stabilized Construction Entrance	3	EA	3,200-	9,600.00
7	***Traffic***				
SP7.1	Traffic Control	1	LS	38,000-	38,000.00
8	***MISC***				
SP8.1	Mobilization	1	LS	60,000-	60,000.00

Total Base Bid 656,011 00

Total (written in words):

Six hundred fifty six thousand eleven & 00/100

Motley - Motley Inc.
Firm Name of Bidder

Signature of Bidder

V.P.
Official Title

6901 SR 270 Pullman, WA. 99163
Bidders Mailing Address

10880 - unlimited - 1-2-3
Public Works License No.

WASH.
State of Incorporation if Incorporated

SEAL (if incorporated)

Dated at Pullman

This 15 day of Nov., 2022

3. DRAWINGS, SPECIFICATIONS AND PROPOSAL, SPECIAL PROVISIONS:

Amend IB-13 PERFORMANCE PERIOD to read:

IB-13. PERFORMANCE PERIOD

A. This work shall not begin prior to May 22nd, 2023 and shall be substantially completed by August 4th, 2023.

4. DRAWINGS, SPECIFICATIONS AND PROPOSAL, SPECIAL PROVISIONS:

Amend the first paragraph of **The Invitation to Bid** to read:

The City of Moscow, Idaho is accepting sealed bids to be submitted to the business office of The Community Planning & Design Engineering Division at 504 South Washington Street, Moscow, Idaho 83843, and clearly marked "**Bid Enclosed – Almon Asbury Alley Paving Project**" until **2:00 p.m.**, prevailing local time, **Tuesday, November 15, 2022**, for the following project:

SUBMITTED BY:

PROFESSIONAL ENGINEER
LICENSED
15137
5/24/22
STATE OF IDAHO
ROBERT H. BUVEL, III

Receipt of **ADDENDUM NO. 1** must be acknowledged. This document must be signed and attached to the bid to acknowledge its receipt:

MOTLEY-MOTLEY INC.
Firm Name of Bidder

Signature of Bidder

V.P.
Title

11/14/22
Date

BID OR PROPOSAL BOND

KNOW ALL BY THESE PRESENTS, That we, Motley-Motley, Inc.

of 6901 State Route 270, Pullman, WA 99163 (hereinafter called the Principal),

as Principal, and Travelers Casualty and Surety Company of America

(hereinafter called the Surety), as Surety, are held and firmly bound unto City of Moscow

504 South Washington Street, Moscow, ID 83843

(hereinafter called the Obligee) in the penal sum of Five Percent of Amount Bid

Dollars ($ 5%)

for the payment of which the Principal and the Surety bind themselves, their heirs, executors, administrators, successors and assigns, jointly and severally, firmly by these presents.

SIGNED and SEALED this 9th day of November, 2022.

THE CONDITION OF THIS OBLIGATION IS SUCH, That, whereas the Principal has submitted or is about to submit a proposal to the Obligee on a contract for Almon Asbury Alley Paving Project

NOW, THEREFORE, if the said contract be timely awarded to the Principal and the Principal shall, within such time as may be specified, enter into the contract in writing, and give bond, if bond be required, with surety acceptable to the Obligee for the faithful performance of the said contract, then this obligation shall be void; otherwise to remain in full force and effect.

Motley-Motley, Inc.
Principal

By
Frank J. Motley President

Travelers Casualty and Surety Company of America

By
Jamie Armfield Attorney-in-Fact

TRAVELERS	Travelers Casualty and Surety Company of America Travelers Casualty and Surety Company St. Paul Fire and Marine Insurance Company

POWER OF ATTORNEY

KNOW ALL MEN BY THESE PRESENTS: That Travelers Casualty and Surety Company of America, Travelers Casualty and Surety Company, and St. Paul Fire and Marine Insurance Company are corporations duly organized under the laws of the State of Connecticut (herein collectively called the "Companies"), and that the Companies do hereby make, constitute and appoint **Jamie Armfield** of **SEATTLE**, **Washington**, their true and lawful Attorney(s)-in-Fact to sign, execute, seal and acknowledge any and all bonds, recognizances, conditional undertakings and other writings obligatory in the nature thereof on behalf of the Companies in their business of guaranteeing the fidelity of persons, guaranteeing the performance of contracts and executing or guaranteeing bonds and undertakings required or permitted in any actions or proceedings allowed by law.

IN WITNESS WHEREOF, the Companies have caused this instrument to be signed, and their corporate seals to be hereto affixed, this **21st** day of **April, 2021**.

TRAVELERS CASUALTY AND SURETY COMPANY OF AMERICA HARTFORD, CONN. | TRAVELERS CASUALTY AND SURETY COMPANY HARTFORD, CONN. | ST. PAUL FIRE AND MARINE INSURANCE COMPANY CORPORATE SEAL

State of Connecticut

By: _____
Robert L. Raney, Senior Vice President

City of Hartford ss.

On this the **21st** day of **April, 2021**, before me personally appeared **Robert L. Raney**, who acknowledged himself to be the Senior Vice President of each of the Companies, and that he, as such, being authorized so to do, executed the foregoing instrument for the purposes therein contained by signing on behalf of said Companies by himself as a duly authorized officer.

IN WITNESS WHEREOF, I hereunto set my hand and official seal.

My Commission expires the **30th** day of **June, 2026**

ANNA P. NOWIK NOTARY PUBLIC CONNECTICUT

_____
Anna P. Nowik, Notary Public

This Power of Attorney is granted under and by the authority of the following resolutions adopted by the Boards of Directors of each of the Companies, which resolutions are now in full force and effect, reading as follows:

RESOLVED, that the Chairman, the President, any Vice Chairman, any Executive Vice President, any Senior Vice President, any Vice President, any Second Vice President, the Treasurer, any Assistant Treasurer, the Corporate Secretary or any Assistant Secretary may appoint Attorneys-in-Fact and Agents to act for and on behalf of the Company and may give such appointee such authority as his or her certificate of authority may prescribe to sign with the Company's name and seal with the Company's seal bonds, recognizances, contracts of indemnity, and other writings obligatory in the nature of a bond, recognizance, or conditional undertaking, and any of said officers or the Board of Directors at any time may remove any such appointee and revoke the power given him or her; and it is

FURTHER RESOLVED, that the Chairman, the President, any Vice Chairman, any Executive Vice President, any Senior Vice President or any Vice President may delegate all or any part of the foregoing authority to one or more officers or employees of this Company, provided that each such delegation is in writing and a copy thereof is filed in the office of the Secretary; and it is

FURTHER RESOLVED, that any bond, recognizance, contract of indemnity, or writing obligatory in the nature of a bond, recognizance, or conditional undertaking shall be valid and binding upon the Company when (a) signed by the President, any Vice Chairman, any Executive Vice President, any Senior Vice President or any Vice President, any Second Vice President, the Treasurer, any Assistant Treasurer, the Corporate Secretary or any Assistant Secretary and duly attested and sealed with the Company's seal by a Secretary or Assistant Secretary; or (b) duly executed (under seal, if required) by one or more Attorneys-in-Fact and Agents pursuant to the power prescribed in his or her certificate or their certificates of authority or by one or more Company officers pursuant to a written delegation of authority; and it is

FURTHER RESOLVED, that the signature of each of the following officers: President, any Executive Vice President, any Senior Vice President, any Vice President, any Assistant Vice President, any Secretary, any Assistant Secretary, and the seal of the Company may be affixed by facsimile to any Power of Attorney or to any certificate relating thereto appointing Resident Vice Presidents, Resident Assistant Secretaries or Attorneys-in-Fact for purposes only of executing and attesting bonds and undertakings and other writings obligatory in the nature thereof, and any such Power of Attorney or certificate bearing such facsimile signature or facsimile seal shall be valid and binding upon the Company and any such power so executed and certified by such facsimile signature and facsimile seal shall be valid and binding on the Company in the future with respect to any bond or understanding to which it is attached.

I, **Kevin E. Hughes**, the undersigned, Assistant Secretary of each of the Companies, do hereby certify that the above and foregoing is a true and correct copy of the Power of Attorney executed by said Companies, which remains in full force and effect.

Dated this 9th day of November, 2022.

TRAVELERS CASUALTY AND SURETY COMPANY OF AMERICA HARTFORD, CONN. | TRAVELERS CASUALTY AND SURETY COMPANY HARTFORD, CONN. | ST. PAUL FIRE AND MARINE INSURANCE COMPANY CORPORATE SEAL

_____
Kevin E. Hughes, Assistant Secretary

To verify the authenticity of this Power of Attorney, please call us at 1-800-421-3880.
Please refer to the above-named Attorney(s)-in-Fact and the details of the bond to which this Power of Attorney is attached.

May 24, 2022
ADDENDUM NO. 1
City of Moscow Project: **ALMON ASBURY ALLEY PAVING PROJECT**
Project No. **104-020**

The following changes, additions, clarifications, and/or deletions are hereby made a part of Moscow's project **ALMON ASBURY ALLEY PAVING PROJECT**, as fully and completely as if the same were entirely set forth in the Plans, Specifications, and Contract Documents. This addendum, as set forth herein, shall become an integral part of any contract entered into by and between the Owner and the Contractor.

---

1. DRAWINGS, SPECIFICATIONS AND PROPOSAL, INVITATION TO BID:
   Amend **Base Bid Schedule**:

   Replace the current bid schedule on pages 4 of 97 and 5 of 97 with the base bid schedule attached to this addendum.

2. DRAWINGS, SPECIFICATIONS AND PROPOSAL, SPECIAL PROVISIONS:
   Insert the following after SP-3.3 EXISTING STORM SERVICE CONNECTION and before SP-4.1 REINFORCED CONCRETE APPROACH:

SP-3.4 STORM SEWER MANHOLE w/ CAST-IN-PLACE BASE (4' DIAMETER)

This work shall consist of, but not limited to, the installation of sanitary sewer manhole with a cast in place base per STD DWG #21. The installation shall be completed in accordance with the Project Plans, Engineering Specifications ES-17, ES-19, and ES-22, and the Standard Drawings..

This item includes everything required to complete this work including, but not limited to labor, materials and equipment.

Measurement and Payment:

Storm Sewer Manhole w/ Cast-In-Place Base (4' Diameter) shall be paid per each. Payment shall be shown on the Contractor's Proposal and shall include excavation, bedding, backfill, ring and cover and all materials, labor, equipment, and incidentals necessary to perform the work for:

SP-3.4 STORM SEWER MANHOLE w/ CAST-IN-PLACE BASE (4'DIAMETER)……EA

3. DRAWINGS, SPECIFICATIONS AND PROPOSAL, SPECIAL PROVISIONS:

Amend IB-13 PERFORMANCE PERIOD to read:

IB-13. PERFORMANCE PERIOD

A. This work shall not begin prior to May 22nd, 2023 and shall be substantially completed by August 4th, 2023.

4. DRAWINGS, SPECIFICATIONS AND PROPOSAL, SPECIAL PROVISIONS:

Amend the first paragraph of **The Invitation to Bid** to read:

The City of Moscow, Idaho is accepting sealed bids to be submitted to the business office of The Community Planning & Design Engineering Division at 504 South Washington Street, Moscow, Idaho 83843, and clearly marked "**Bid Enclosed – Almon Asbury Alley Paving Project**" until **2:00 p.m.**, prevailing local time, **Tuesday, November 15, 2022**, for the following project:

SUBMITTED BY:

PROFESSIONAL ENGINEER
LICENSED
15137
5/24/22
STATE OF IDAHO
ROBERT H. BUVEL, III

Receipt of **ADDENDUM NO. 1** must be acknowledged. This document must be signed and attached to the bid to acknowledge its receipt:

MOTLEY-MOTLEY INC.
Firm Name of Bidder

Signature of Bidder

V.P.
Title

11/14/22
Date

BASE BID SCHEDULE – Almon Asbury Alley Paving Project

Item		Base Bid			
Bid Item No.	Description	Item Quantity	Units	Unit Price	Total Value of Item ($)
1	***Earthwork***				
SP1.1	Remove and Dispose of Bituminous Surface	523	SY		
SP1.2	Remove and Dispose of Concrete Driveway Approach	21	SY		
SP1.3	Remove and Dispose of Manhole	3	EA		
SP1.4	Excavation (plan quantity)	260	CY		
2	***Sewer***				
SP2.1	Sanitary Sewer Manhole (4' Diameter)	4	EA		
SP2.2	8-Inch PVC Sanitary Sewer Pipe (Class D Backfill)	1237	LF		
SP2.3	Existing Sanitary Service Connection	39	EA		
SP2.4	Sanitary Sewer Bypass	1	LS		
3	***Storm***				
SP3.1	Catch Basin	2	EA		
SP3.2a	8-Inch Storm Sewer Pipe (Class D Backfill)	357	LF		
SP3.2b	8-Inch C900 Storm Sewer Pipe (Class D Backfill)	75	LF		
SP3.3	Existing Storm Service Connection	2	EA		
SP3.4	Storm Sewer Manhole w/ Cast-In-Place Base (4' Diameter)	1	EA		
4	***Concrete***				
SP4.1	Reinforced Driveway Approach	21	SY		
5	***Roadway***				
SP5.1	1/2" Superpave HMA Pavement	310	TON		
SP5.2	3/4" Crushed Rock Base	465	TON		
SP5.3	1-1/4" Crushed Rock Base	50	TON		
SP5.4	Subgrade Separation Geotextile	1392	SY		
SP5.5	Soft Spot Repair	50	SY		
6	***BMPs***				
SP6.1	Inlet Protection	6	EA		
SP6.2	Stabilized Construction Entrance	3	EA		
7	***Traffic***				
SP7.1	Traffic Control	1	LS		

8	***MISC***				
SP8.1	Mobilization	1	LS		

Total Base Bid _____

Total (written in words):

_____

_____
Firm Name of Bidder

_____
Signature of Bidder

_____
Official Title

_____
Bidders Mailing Address

_____
Public Works License No.

_____
State of Incorporation if Incorporated

SEAL (if incorporated)

Dated at _____

This _____ day of _____, 2022

Almon Asbury Alley Paving Project No. 104-020
Bids Opened 11/15/2022

				Engineers Estimate		Bid From: Motley-Motley **Low Bidder**		Bid From: Germer Construction		Bid From: M.L. Albright	
Item No.	**Item Description**	**Qty.**	**Unit**	**Unit Price**	**Amount**	**Price**	**Total**	**Price**	**Total**	**Price**	**Total**
	Earthwork										
1.1	Remove and Dispose of Bituminous Surface	523	SY	$11.00	$5,800.00	$20.00	$10,460.00	$13.60	$7,112.80	$7.50	$3,922.50
1.2	Remove and Dispose of Concrete Driveway Approach	21	SY	$15.00	$300.00	$50.00	$1,050.00	$85.00	$1,785.00	$19.50	$409.50
1.3	Remove and Dispose of Manhole	3	EA	$2,000.00	$6,000.00	$3,500.00	$10,500.00	$2,340.00	$7,020.00	$2,600.00	$7,800.00
1.4	Excavation (plan quantity)	260	CY	$20.00	$5,200.00	$46.00	$11,960.00	$24.00	$6,240.00	$29.00	$7,540.00
	Sewer										
2.1	Sanitary Sewer Manhole (4' Diameter)	4	EA	$5,000.00	$15,000.00	$6,200.00	$24,800.00	$7,670.00	$30,680.00	$9,400.00	$37,600.00
2.2	8-inch PVC Sanitary Sewer Pipe (Class D Backfill)	1237	LF	$150.00	$185,600.00	$195.00	$241,215.00	$235.00	$290,695.00	$246.25	$304,611.25
2.3	Existing Sanitary Service Connection	39	EA	$799.00	$31,200.00	$1,100.00	$42,900.00	$745.00	$29,055.00	$670.00	$26,130.00
2.4	Sanitary Sewer Bypass	1	LS	$20,000.00	$20,000.00	$32,000.00	$32,000.00	$45,700.00	$45,700.00	$28,000.00	$28,000.00
	Storm										
3.1	Catch Basin	2	EA	$1,500.00	$3,000.00	$3,200.00	$6,400.00	$2,710.00	$5,420.00	$2,200.00	$4,400.00
3.2a	8-inch Storm Sewer Pipe (Class D Backfill)	357	LF	$100.00	$35,700.00	$130.00	$46,410.00	$178.00	$63,546.00	$131.00	$46,767.00
3.2b	8-inch C900 Storm Sewer Pipe (Class D Backfill)	75	LF	$110.00	$8,300.00	$155.00	$11,625.00	$198.00	$14,850.00	$182.00	$13,650.00
3.3	Existing Storm Service Connection	2	EA	$1,000.00	$2,000.00	$1,000.00	$2,000.00	$800.00	$1,600.00	$1,500.00	$3,000.00
3.4	Storm Sewer Manhole w/ Cast-In-Place Base (4' Diameter)	1	-	-	-	$6,500.00	$6,500.00	$5,605.00	$5,605.00	$6,400.00	$6,400.00
	Concrete										
4.1	Reinforced Driveway Approach	21	SY	$100.00	$2,100.00	$190.00	$3,990.00	$203.00	$4,263.00	$215.00	$4,515.00
	Roadway										
5.1	1/2" Superpave HMA Pavement	310	TON	$200.00	$62,000.00	$215.00	$66,650.00	$165.00	$51,150.00	$170.00	$52,700.00
5.2	3/4" Crushed Rock Base	465	TON	$25.00	$7,500.00	$45.00	$20,925.00	$38.00	$17,670.00	$36.50	$16,972.50
5.3	1-1/4" Crushed Rock Base	50	TON	$25.00	$7,300.00	$45.00	$2,250.00	$40.00	$2,000.00	$50.00	$2,500.00
5.4	Subgrade Separation Geotextile	1392	SY	$5.00	$7,500.00	$3.00	$4,176.00	$2.90	$4,036.80	$5.50	$7,656.00
5.5	Soft Spot Repair	50	SY	$50.00	$3,000.00	$40.00	$2,000.00	$58.00	$2,900.00	$220.00	$11,000.00
	BMPs										
6.1	Inlet Protection	6	EA	$400.00	$2,400.00	$100.00	$600.00	$325.00	$1,950.00	$105.00	$630.00
6.2	Stabilized Construction Entrance	3	EA	$6,000.00	$18,000.00	$3,200.00	$9,600.00	$1,885.00	$5,655.00	$1.00	$3.00
	Traffic										
7.1	Traffic Control	1	LS	$24,000.00	$24,000.00	$38,000.00	$38,000.00	$27,060.00	$27,060.00	$30,000.00	$30,000.00
	MISC										
8.1	Mobilization	1	LS	$36,152.00	$36,200.00	$60,000.00	$60,000.00	$50,079.00	$50,079.00	$76,500.00	$76,500.00
				TOTAL	$488,100.00	**TOTAL**	$656,011.00	**TOTAL**	$676,072.60	**TOTAL**	$692,706.75
				10% Contingency	$48,810.00						
				Estimate Total	$536,910.00						

COMMITTEE STAFF REPORT

DATE: Monday, November 28, 2022

RESPONSIBLE STAFF

Bill Belknap, City Supervisor

ADDITIONAL PRESENTER(S)

OTHER RESOURCES

AGENDA ITEM TITLE

Updated Personnel Policies Adoption (ACTION ITEM) - Bill Belknap

DESCRIPTION

Over the last year, the City has been working to update and modernize the City's Personnel Policies to reflect current employment laws and regulations and benefit programs. The Council has reviewed and approved all of the substantive changes to the policies on a section-by-section basis. Staff has compiled the changes into a single document for the Council's review and approval by Resolution.

STAFF RECOMMENDATION

Recommend approval of the proposed Personnel Policies and the associated Resolution.

PROPOSED ACTIONS

PROPOSED ACTIONS: Recommend approval of the proposed Personnel Policies and the associated Resolution, or provide staff further direction.

FISCAL IMPACT

PERSONNEL IMPACT

ATTACHMENTS

1. Personnel Policies Draft

City of Moscow Personnel Policies

Effective: _____Pursuant to Resolution 2022-

DRAFT

TABLE OF CONTENTS

Chapter 1 – Code of Conduct 5
I. Workplace Expectations 5
II. Employee Conduct 6
III. Workplace Conduct 7
Chapter 2 – Compensation & Benefits 10
I. Salary Administration 10
II. Employee Classification 10
III. Compensation 11
IV. Health Benefits 12
V. Retirement Benefits 13
VI. Overtime 14
VII. Compensatory Time 15
VIII. Educational Assistance 16
Chapter 3 – Hiring 18
I. Equal Employment Opportunity 18
II. Americans With Disabilities Act 18
III. Veteran's Preference and Rights 18
IV. Nepotism/Hiring of Relative 19
V. Promotion & Transfer 20
VI. Re-Employment of Former Employees 21
Chapter 4 - Performance Evaluation 22
I. Introductory Period 22
II. Performance Appraisals 23
Chapter 5 - Legal Requirements 25
I. Unlawful Workplace Discrimination, Harassment and Retaliation 25
II. Drug-Free Workplace Policy 29
Chapter 6 - Discipline & Termination 36
I. Employee Discipline 36
II. Employee Grievance 38
III. Termination of Employment 39
IV. Name-Clearing Hearing 41

DRAFT

Chapter 7 - Hours of Work **43**
I. Hours of Work 43
II. Work Period 43
III. Attendance and Punctuality 44
IV. Rest and Meal Periods 45
V. On-Call and Call-Back 46
VI. Telecommuting 47
VII. Layoff and Recall 51
Chapter 8 – Leave **53**
I. Leaves of Absence 53
II. Leave Approval 53
III. Active-Duty Military Leave 54
IV. Inactive-Duty or Training Military Leave 55
V. Disability Leave 55
VI. Floating Holiday 55
VII. Holidays 55
VIII. Moscow Volunteer Fire Department Leave 56
IX. Paid Parental Leave 57
X. Bereavement 57
XI. Jury Duty 59
XII. Vacation 59
XIII. Sick Leave 61
XIV. Sick Leave Bank 62
XV. Workers Compensation 63
XVI. Compensation 64
XVII. Family and Medical Leave Act (FMLA) 64
XVIII. Fit for Duty 67
XIX. Return to Work – Light Duty 69
Chapter 9 - Records **70**
I. Payroll and Time Records 70
II. Personnel Files 70
III. Management of Information In Personnel Files 71

DRAFT

Chapter 10 - Operational Policies 73
I. Conflicts of Interest 73
II. Outside Employment 73
III. Business Travel 75
IV. Use of Communication Systems 75
V. Vehicle Use 77
VI. Social Media 80

DRAFT

Chapter 1 – Code of Conduct

I. Workplace Expectations

The City of Moscow strives to administer fair and effective personnel policies, to require all employees to follow a code of conduct as detailed in this personnel policy which support the City's best interests, and to provide equal employment opportunities to all persons in all aspects of the employer-employee relationship, including recruitment, hiring, training, promotion, compensation, discipline and termination.

A. The City's goals for employees include the following:

1. To provide equal employment opportunity and treatment regardless of race, color, religion, sex, national origin, disability, genetic information, age (40 or older), marital or familial status (including pregnancy), sexual orientation, gender, gender expression or identity, military status, or any basis prohibited by local, state, or federal law;

2. To promote a productive work environment and not to tolerate conduct by any employee which harasses, disrupts, or interferes with another's work performance or which creates an intimidating, offensive, or hostile work environment;

3. To provide compensation and benefits commensurate with the work performed;

4. To establish reasonable hours of work based on the City's service needs.

5. To monitor and comply with applicable federal, state, and local laws and regulations concerning employee safety;

6. To offer training opportunities and continuing education for those whose needs, capabilities, and job position warrant such training; and

7. To establish appropriate means for employees to discuss matters of interest or concern with their immediate supervisor or manager.

B. The City expects all employees:

1. To communicate and treat the public, customers, suppliers, and each other in a professional manner;

2. To perform assigned tasks in an efficient manner;

3. To comply with the hours of work scheduled for the employee as determined by the employee's department manager or supervisor;

4. To demonstrate a considerate, friendly, and constructive attitude toward fellow employees; and

5. To adhere to the policies adopted by the City.

C. The City retains the sole discretion to exercise all managerial functions, consistent with these policies, including but not limited to the following:

1. To dismiss, reassign, supervise, and discipline employees;

2. To determine and change shifts, to include the start and end of any shift;

3. To transfer employees within departments or into other departments and other classifications;

4. To determine and change the size and qualifications of the work force;

5. To determine and change methods by which its operations are to be carried out;

6. To assign duties to employees in accordance with the City's needs and requirements; and

7. To carry out all ordinary administrative and management functions.

II. Employee Conduct

A. General Expectations.

Employees of the City of Moscow are expected to conduct themselves in a manner which does not reflect adversely upon the City. Each employee must recognize that public employees are subject to additional public scrutiny in their public and personal lives because the public's business requires the utmost integrity and care. In order to accomplish the goals of the City as a public institution, each employee is expected to avoid personal behaviors which would bring unfavorable public impressions of the City, its officials, and employees.

B. In order to accomplish the goals of the City, each employee shall:

1. Be prompt and regular in attendance at work or other required City functions;

2. Comply with dress standards established in the department for which the employee works. Dress standards shall be set by the supervisor, but in the absence of any department dress standards, clothing shall be appropriate for the functions performed and shall include proper grooming and a professional appearance as a reflection of how employees view their work and how the public sees employees and the City as a whole;

DRAFT

3. Dedicate primary efforts to the City of Moscow employment with secondary employment subject to approval. Individual department rules may provide permissible examples of "moonlighting" wherein employees may hold additional positions;

4. Avoid nepotism in appointments and working relationships with other employees in the City. No employee shall engage in conduct which violates Idaho State nepotism laws (I.C. § 18-1359, and Title 74 of Idaho Code) or City of Moscow Policy. The City believes that employment opportunities should not be influenced by family relationships. Additionally, employment of immediate family members is not allowed where one family member would have authority to influence employment decisions regarding the other, or where there is potential work-related conflict of interest between them;

5. Not accept gifts or gratuities in any personal or professional capacity which could create the impression that the giver was seeking favor from the employee or official;

6. Not serve on any board or commission which regulates or otherwise affects the official duties or personal interests of said official or employee in a way that could create disadvantage for other members of the public or advantage for the employee;

7. Not release personnel information or any other public record without the express authority of the public official responsible for custody or release of the record or without an order from a court of competent jurisdiction;
   Not engage in conduct away from work which would reasonably be expected to reflect adversely upon the employee's position with the City of Moscow;

8. Not use substances, unlawful or otherwise, which will impair the employee's ability to function as a valued and competent member of the City of Moscow work force;

9. Not engage in conduct that would suspend any licenses required for the employee's ability to perform the employee's essential job functions; and

10. Not engage in workplace or public conduct otherwise detrimental to the accomplishment of the goals established by the City Council or the official or department for whom the employee works.

III. Workplace Conduct

Employees are expected to conduct themselves in the workplace in accordance with the following rules. These rules are not all-inclusive of conduct expected of City of Moscow employees and specific City Departments may have additional work place rules.

A. Each employee of the City shall:

1. Give best efforts to accomplish the work of the City of Moscow for public benefit in accordance with policies and procedures adopted by the City Council;

2. Adhere to any code of ethics in employee's profession and avoid conflicts of interest or using employee's public position for personal gain;

3. Follow all rules for care and use of public property to assure that the public investment in equipment is protected and that the safety of the public and other employees is maintained;

4. Abide by all departmental rules whether they be written or issued orally by their supervisor. No employee will be required to follow the directive of a supervisor which violates laws of any local jurisdiction, the state, or nation;

5. Abide by City of Moscow rules concerning the dissemination of information to the public from public records or about public matters. The decision to release information from public records or to disclose writings or other information in the hands of a public official belongs with the responsible official who has official custody of that record. Each employee shall maintain the confidential nature of records which are not open to public scrutiny in accordance with the direction of the responsible official. The City has a formal process by which all requests for public records must be submitted, which may change from time to time through City Council by Resolution;

6. Adhere to the defined work schedule and adhere to the procedures for requesting an exception from normal work schedules. Each employee will follow the rules regarding the reporting of work hours and the approval which must be given for pay record submittal. Failure to follow such rules may be grounds for delayed payment of wages, salaries, or reimbursements or for imposition of appropriate disciplinary penalties;

7. Follow rules regarding breaks and lunch periods, including provisions granting supervisors authority to adjust them. Timing of breaks or lunch periods may be changed to accommodate the completion of necessary work;

8. Follow all rules for reporting accidents on the job. Each employee will cooperate in the reporting and reconstruction of any job-related accident in order that workplace hazards can be eliminated and that proper consideration can be accorded to injured workers and the public;

9. Report any accidents observed to have happened on City property or involving City property or personnel. Each employee shall provide as much information as they can from the observations made in the course of activities associated with one's work. Such information should be reported to the employee's immediate supervisor as soon as physically possible and reasonable efforts should be made to assist those in need;

10. Follow all rules regarding safety in the workplace whether established formally by the department or by outside agencies having authority to regulate workplace safety. Employees are encouraged to suggest ways to make the workplace or work procedures safer;

DRAFT

11. Maintain a current driver's license when necessary in the conduct of work for the City. Each employee is obligated to report any state-imposed driving restrictions to their immediate supervisor and to notify their supervisor in the event that their driving abilities are impaired by other than state restrictions; and

12. Perform such obligations as are necessary to carry out the work of the City in an efficient and effective manner and with limited risk to the employee, the public and fellow employees.

B. The foregoing lists are not all-inclusive.

Violation of any of the rules set forth above, in addition to the ones imposed by the employee's supervisor or the employee's department, may be grounds for disciplinary action, including termination. The rules contained in the personnel policy manual are subject to change at any time at the discretion of the City Council upon approval by Resolution, and will be available through the intranet. Employees will be notified of the changes through email and will be required to review the changes and acknowledge their understanding of the changes. The changes approved by City Council are often effective immediately, but the effective date included in the Resolution will govern.

DRAFT

Chapter 2 – Compensation & Benefits

I. Salary Administration

A. Nondiscriminatory and Competitive

The City provides compensation that is nondiscriminatory and which strives to be competitive in relation to the local and regional job market, while taking into consideration the City's overall financial condition and the direction given by the Mayor and Council as they determine budget appropriations every year.

B. Review

Human Resources is responsible for the internal review of compensation and ensuring that each job is evaluated and assigned the appropriate job grade. This review should determine whether compensation accurately and fairly reflects each position's responsibilities and education, training, and licensing requirements.

C. Surveys

When considered appropriate, Human Resources will conduct and/or obtain compensation surveys to include other comparable employers with similar positions. These surveys and information will be used to set market values for each position in the City's pay structure.

D. Compensation Systems

The City of Moscow has two compensation systems the Step and Grade System (S & G) and the Actively Managed Performance System (AMPS). S & G applies to sworn law enforcement employees, AMPS applies to all other employees. Both systems are intended to compensate employees for their performance, positive contributions, knowledge and experience.

II. Employee Classification

For various reasons, employee status must be organized by classifications to administer employee policies, benefits, or otherwise address employment issues.

A. Employee Classification for Employment Status

1. All employees of the City, including part-time and temporary employees, are at-will employees, except appointed officials.

2. Appointed Officials: Officials appointed pursuant to Idaho Code § 50-204 and Moscow City Code Title 2, Chapter 3 may only be removed pursuant to Idaho Code § 50-206 and Moscow City Code Title 2, Chapter 3.

DRAFT

B. Employee Classification for Benefit Purposes

The classification of the position an employee holds with the City may affect the status of obligations or benefits associated with their employment. Primary classes of employees are:

1. Elected Officials

   Elected Officials are not considered regular employees. Elected Officials receive salaries pursuant to Moscow City Code Title 1, Chapter 8.

2. Full-Time Regular Employees

   Employees whose employment is sustained and continuing and whose typical work period consists of at least forty (40) hours per week are eligible for employee benefits provided by the City.

3. Part-Time Regular Employees

   a. Employees whose employment is sustained and continuing and whose typical work period consists of more than nineteen (19) but less than forty (40) hours per week may receive benefits to vary proportionately with the number of hours typically worked for a full-time regular employee. The number of hours worked may also affect the employee's obligation to participate in specific mandatory state benefit programs. Certain benefits may not be available because qualifying thresholds have not been reached.

   b. Employees whose employment is sustained and continuing and whose typical work period consists of nineteen (19) hours or less per week. These employees receive no benefits provided to regular employees.

4. Full- or Part-Time Temporary Employees

   Employees who work on an irregular, seasonal, or temporary basis are temporary. Temporary employees receive no benefits provided to regular employees, except those required by law or authorized by the City Council.

III. Compensation

A. Establishment of Employee Compensation

Employees are compensated subject to the City Council's decisions as annual budgets are approved and, as such, are subject to increase, reduction, or remain unchanged for any time period. Final decisions regarding compensation policy rest with the City Council.

B. Compliance with State and Federal Pay Regulations

The City will comply with all state and federal pay regulations governing compensation of its employees. Information contained within this policy is reflective of U.S. Department of Labor's administration of FLSA (https://www.dol.gov/agencies/whd/flsa).

C. Right to Change Compensation and Benefits

The City may change compensation for any reason deemed appropriate by the City Council. Compensation may also be adjusted based upon job performance and the availability of funds to maintain a solvent city budget. Hours worked may be reduced, or employees may be laid off as necessary to meet budgetary constraints or as work needs change.

IV. Health Benefits

The City will provide its employees with the opportunity to participate in health-related benefit programs, which includes medical, dental, and vision. The City also has various voluntary programs that may be available to employees, such as critical illness, accident, long term disability, supplemental life insurance, and hospital indemnity. The voluntary programs available may change based on demand and what is available from the City's providers. Information and explanations of the various benefit plans that employees are eligible to participate in will be furnished to all plan participants on a timely and continuing basis by Human Resources. The City reserves the right to modify, amend, or terminate its benefits at any time in accordance with all federal and state regulations.

A. Health Benefit Coverage by Employee Classification

1. Elected Officials

   City shall provide full coverage for the elected official and 50% of dependent coverage paid by the City of Moscow.

2. Full-Time Regular Employees

   City shall provide full coverage for the employee and 50% of dependent coverage paid by the City of Moscow.

3. Part-Time Regular Employees

   a. Part-time employees who consistently work more than thirty (30) hours per week shall be eligible to receive full coverage for the employee and 50% of dependent coverage paid by the City of Moscow.

   b. Part-time employees who work less than thirty (30) hours per week are not eligible to receive health benefits.

DRAFT

4. Full or Part-Time Temporary Employees

   Full or part-time temporary employees are not eligible to receive health benefits.

B. Enrollment

Insurance coverage generally becomes effective on the first day of the calendar month following the first date of work. Employees (and covered dependents) who would otherwise lose health coverage because of a "qualifying event" as defined by the benefit provider may be eligible to enroll in the City's benefits outside the open enrollment period. Qualifying events, also commonly called qualifying life events, are circumstances that can significantly impact your personal and financial situation and may include, but are not limited to, getting married, getting divorced, having a baby or adopting a child, the death of a spouse, termination of employment, and loss of dependent status, are eligible to continue coverage under terms established by federal law known as COBRA (Consolidated Omnibus Budget Reconciliation Act of 1985). Changes to dependent coverage may be made when a qualifying event such as those mentioned above, occurs. Changes to benefit elections may be made annually at open enrollment. Open enrollment occurs annually and Human Resources will notify employees of the open enrollment period. Employee will only be permitted to make changes during open enrollment, absent the occurrence of a "qualifying event".

V. Retirement Benefits

Employees become a PERSI member when they work in an eligible position with a PERSI employer. When an employee earns sixty (60) months of service credit, they will be vested to receive a lifetime benefit at retirement. The sixty (60) month vesting period (five (5) months for elected and some appointed officials) does not need to be with the same PERSI employer. Unless an employee leaves public employment altogether, changing jobs should not affect their PERSI membership.

A. Enrollment in the PERSI Base Plan is automatic.

Pursuant to Idaho law, employees automatically become a member of PERSI and eligible for the Base Plan if:

1. Employer belongs to PERSI; and

2. Employment is for 5 consecutive months or more; and

3. Employee normally works 20 hours or more per week; and

4. An elected or appointed official serving on a board, council, or commission who receives a salary or honorarium for services performed, even though you receive a nominal salary and do not normally work 20 hours or more per week.

B. Those NOT eligible to join PERSI include:

1. Independent contractors;

2. Employee is provided employment in a public program benefiting themselves;

3. Inmates of a state correctional institution;

4. Student at a state college or university, and employed at the same school where the employment depends on maintaining student status;

5. Employee is making contributions to the U.S. Civil Service Commission under the U.S. Civil Service System Retirement Act; and

6. Seasonal employees whose employment depends on weather and growing seasons with less than 8 months of service.

C. PERSI Contributions and Regulations

1. Employee contributions are made by the employee and employer contributions are made by the City through the payroll process on a percentage of salary determined by PERSI.

2. Regulations pertaining to PERSI are pursuant to Idaho Code Title 59, Chapter 13 and IDAPA 59.

3. Additional information may be obtained by visiting the official website: persi.idaho.gov

VI. Overtime

The City follows the federal overtime provisions contained in the Fair Labor Standards Act (FLSA). Unless exempt, employees covered by the Act must receive overtime pay for hours worked over 40 in a workweek at a rate not less than time and one-half their regular rates of pay. There is no limit in the Act on the number of hours employees aged 16 and older may work in any workweek. The Act does not require overtime pay for work on Saturdays, Sundays, holidays, or regular days of rest, unless overtime is worked on such days. All employees are classified as exempt (salaried) or non-exempt (hourly) for purposes of complying with FLSA.

A. Exempt and Non-Exempt Employees

1. Exempt Employees - Employees who are exempt from the overtime provisions of the FLSA. These employees are paid based on a salary commensurate with their job functions and meet the requirements of an exempt employee per the FLSA.

2. Non-Exempt Employees - Employees who are subject to the minimum wage and overtime pay provisions of the FLSA. These employees are paid based on an hourly rate based on the hours worked.

B. Overtime Eligibility

1. Overtime applies to only non-exempt employees and shall be defined as any time worked beyond the regular hours designated in the work period. A minimum of forty (40) hours per work period for non-public safety personnel and eighty (80) hours per pay period for sworn law enforcement/fire personnel before overtime is applied.

2. Overtime pay earned in a particular workweek must be paid on the regular payday for the pay period in which the wages were earned. The amount of overtime pay due to an employee is based on the employee's regular rate of pay and the number of hours worked in a work period as defined in this policy document.

3. It is the policy of the City to limit overtime work. When overtime is necessary and consistent with the protection of the lives and property of the citizens of Moscow and the efficient operation of the various Departments, such overtime may be authorized by the employee's supervisor, but shall be kept at a minimum. Prior authorization by the employee's supervisor is required before overtime can be incurred. Supervisors are responsible for ensuring that overtime hours are kept to a minimum. The supervisor has the discretion, in situations where an employee works more hours than their regular work schedule in any given day, to adjust the employee's hours for the rest of the work period to avoid overtime whenever possible.

4. Non-exempt, sworn law enforcement and fire protection personnel who are assigned to shifts, but use hours charged to sick leave, vacation leave, compensatory time or a City-designated holiday WILL be counted as hours worked for overtime purposes. For all other employees, holiday pay WILL NOT be counted when calculating the number of hours worked during a forty (40) hour pay period.

5. Employees entitled to overtime compensation will receive overtime pay at a rate of one and one-half times their regular rate of pay for each hour worked in excess of the defined work period. The City will allow the accumulation of compensatory time instead of overtime pay at a rate of one and one half (1½) hours for each hour worked in excess of the defined work period.

VII. Compensatory Time

A. Compensatory Time

1. Compensatory time are hours of leave that are earned in lieu of taking overtime pay. Compensatory time may be earned whenever required by a supervisor or when requested by an employee with a supervisor's approval. Compensatory time is earned at the rate of one and one-half (1½) hours of leave per hour of work performed that

would otherwise qualify for overtime pay. The City will allow the accumulation of compensatory time in lieu of overtime pay in an amount not to exceed eighty (80) hours at any time.

2. The use of compensatory time should be requested at a minimum of forty-eight (48) hours in advance and approved by the supervisor or manager. The minimum notice requirement may be altered on a case by case basis at the discretion of the supervisor or manager. The use of earned compensatory leave depends upon the department's ability to effectively operate during an employee's requested absence. Every effort will be made to permit an employee to use compensatory leave on the date requested unless doing so would unduly disrupt the operations of the department.

3. If repeated requests to use compensatory time are unable to be scheduled and reasonable opportunities to use such time are unavailing, an employee's accrued compensatory time will be paid via the payroll process. In the event the supervisor or employee feel repeated requests for time off have not been met or are not able to be accommodated, a request for such payout is to be directed to Human Resources for review.

4. Compensatory time earned in a pay period may not also be used in that same pay period. University Special Events overtime shall not be taken in compensatory time, pursuant to the City's Contract with the University of Idaho.

5. Earning and using compensatory time must be pre-approved by the immediate supervisor.

B. Compensatory Pay

1. When an employee selects compensatory time in lieu of pay, a later request to convert the compensatory time to pay will not be permitted, except in situations where the employee has requested to use compensatory time that was not approved and reasonable opportunities to use such time were not available.

2. Employees will be paid for all accrued compensatory time upon their termination of employment.

VIII. Educational Assistance

A. The City recognizes the need for employees to continually grow and enhance their skills and knowledge. Regular full-time employees with at least one (1) year of service may be eligible to be reimbursed for expenses relating to tuition for work-related classes. An employee who meets the eligibility criteria is not guaranteed educational assistance. Programs must be reviewed by the employee's supervisor and approved by the City Supervisor prior to registration.

B. A passing grade must be achieved to qualify for reimbursement. Transcripts and receipts must be submitted to Human Resources within sixty (60) days following the completion of the course to receive reimbursement. At the discretion of the City Supervisor, tuition may be paid by the City prior to taking the class.

1. Recognizing the constraints of budgetary resources, the number of employees approved for educational assistance shall be limited at the discretion of the City Supervisor.

2. Employees who are terminated during enrollment because of a reduction in force or job elimination will be reimbursed for the full amount of the costs of education incurred up to the date of termination.

3. Employees who, prior to completing the approved course, voluntarily leave the City or are terminated for reasons other than those listed above will not be reimbursed for the expenses associated with the course. If tuition was paid in advance by the City, reimbursement will be made to the City by deduction from the employee's final pay check, or if insufficient funds are available in the employee's last pay check, employee will be required to reimburse City for its contribution to the tuition paid.

4. Employees seeking reimbursement for educational expenses must agree in writing to repay the City in full for all tuition expenses reimbursed by the City if the employee leaves the City voluntarily or is terminated within one (1) year from the date of reimbursement. Reimbursement to the City will be made by deduction from the employee's final pay check, or if insufficient funds are available in the employee's last pay check, employee will be required to reimburse City for its contribution to the educational assistance expenses.

5. Employees are expected to schedule class attendance and the completion of study assignments outside of the employee's regular working hours. If it is necessary to schedule a class during normal working hours, the employee and their supervisor will mutually agree on a plan to make up the lost work time. Make-up time will not be counted for overtime purposes unless actual hours worked exceed forty (40) during the work week. It is expected that educational activities will not interfere with the employee's work, and unsatisfactory job performance during enrollment may result in forfeiture of educational assistance and termination of employment.

6. Records of all educational programs completed by each employee will be maintained by Human Resources.

7. In keeping with IRS guidelines any educational assistance amounts paid on the behalf of any employee greater than the currently adopted IRS amount will be subject to tax and will be reported as such on the employees W2.

DRAFT

Chapter 3 – Hiring

I. Equal Employment Opportunity

A. All selection of employees and all employment decisions, including classification, transfer, discipline, and discharge, will be made without regard to race, color, religion, sex, gender, sexual orientation, gender expression or identity, age, marital or familial status (including pregnancy), national origin, or non-job-related physical or mental disability, or any other characteristic protected by law. No job or class of jobs will be closed to any individual except where a mental or physical attribute, sex or age is a bona fide occupational qualification.

B. The City will also endeavor to make reasonable accommodations for its employees' religious needs and practices, including those related to appearance and observance of holidays. The law requires an employer to reasonably accommodate an employee's religious beliefs or practices, unless doing so would cause difficulty or expense for the employer. An employee should advise either the manager, supervisor, or Human Resources if they require accommodation for religious reasons.

C. Any concerns regarding hiring or other employment practices should be brought to Human Resources or City Supervisor's attention. Employees can raise concerns and make reports without fear of retaliation. Anyone found to be engaging in any unlawful discrimination will be subject to disciplinary action, up to and including termination of employment.

II. Americans With Disabilities Act

The law requires that the City provide reasonable accommodation to an employee with a disability, unless doing so would cause significant difficulty or expense for the employer. Americans with Disabilities Act of 1990, 42 USC 12101, et seq. A reasonable accommodation is any change in the workplace (or in the way things are usually done) to help a person with a disability apply for a job, perform the duties of a job, or enjoy the benefits and privileges of employment. The City will endeavor to make reasonable accommodations for qualified individuals with known disabilities unless doing so would result in an undue hardship. An employee should advise the manager, supervisor, or Human Resources if they require an accommodation to enable the employee to perform the job's essential tasks.

III. Veteran's Preference and Rights

A. The City will grant a preference to individuals eligible for preference pursuant to Idaho Code § 65-503. In the event of equal qualifications for an available position, a veteran or family member who qualifies for the preference will be selected.

B. The City will comply with the reemployment, leave of absence, and other provisions of the Uniformed Services Employment and Reemployment Rights Act, 38 USC. § 4301, et seq. and Idaho Code § 65-508.

IV. Nepotism/Hiring of Relative

A. No person will be employed by the City when the employment would result in a violation of provisions found in Idaho Code, including but not limited to I.C. Title 74, Chapter 4, Idaho Code §18-1359 and their successors. Any employment made in violation of these sections may be void.

B. The appointment or employment of the following persons is expressly prohibited:

1. No person related to the Mayor or a City Council member by blood or marriage within the second degree shall be appointed to any compensated office, position, employment or duty (I.C. § 18-1359(3)); and

2. No public servant, including Elected Officials and employees, shall appoint or vote for the appointment of any person related to them by blood or marriage within the second degree to any compensated office, position, employment or duty. This means no one related within the second degree to anyone involved in any way in the hiring process can be hired and no one related to an applicant within the second degree by affinity (blood) can take part in the hiring process (I.C. § 18-1359(1)(e)).

C. An employee whose relative is subsequently elected may be eligible to retain employee's position and receive general pay increases, step increases, cost of living increases, and/or other across the board increases in salary or merit increases, benefits and bonuses or promotions as allowed by relevant provisions of Idaho law, including I.C. § 18-1359(5).

D. A relative of an employee will be considered for employment by the City if the applicant possesses all the qualifications for employment. However, a relative will not be hired if the employment would:

1. Create either a direct or indirect supervisor/subordinate relationship with the relative; or

2. Create either an actual conflict of interest or the appearance of a conflict of interest as determined by Human Resources or when the conflict may involve Human Resources staff, as determined by the City Supervisor.

E. Employees who marry another employee or become members of the same household as another employee may continue employment as long as there is not a direct or indirect supervisor/subordinate relationship between the employees.

F. These criteria will also be considered when assigning, transferring, or promoting an employee.

G. For the purpose of this policy, the definitions that apply to this section are as follows:

DRAFT

1. *Child* – A biological, adopted, or foster child, a stepchild, a legal ward, or a child of a person standing "in loco parentis" by providing day-to-day care and/or financial support. For FMLA leave for adoption, foster care or a family member with a severe health condition, the child must either be under age eighteen (18), or age eighteen (18) or older and incapable of self-care because of mental or physical disability as defined by the ADA. For FMLA leave due to birth and care of a newborn child, the child must be under twelve (12) months of age.

2. *Domestic Partner* – As defined in Resolution 2007-31; Each are eighteen (18) years of age or older; share a close personal relationship and are each other's sole domestic partner; are responsible for each other's common welfare; are not legally married to anyone else nor has either had a domestic partner within thirty (30) days immediately prior to completing the application for enrollment to qualify as domestic partners; are not related by blood closer than would bar marriage in Idaho; share the same regular, and permanent residence and each intends to continue to do so indefinitely; jointly share financial responsibility for basic living expenses, including, but not limited to, the cost of food, shelter, and other costs such as medical expenses.

3. *Household* – The spouse and dependent children of the elected official or employee and/or persons whom the elected official or employee is legally obligated to support (I.C. § 74-403(7)). Reside in the same home and are responsible for each other's common welfare, share the same regular and permanent residence, and each intends to continue to do so indefinitely; jointly share financial responsibility for basic living expenses, including, but not limited to, the cost of food, shelter, and other costs such as medical expenses.

4. *Immediate Family Member* – A spouse, brother, sister, parents, children, stepchildren, father-in-law, mother-in-law, sister-in-law, brother-in-law, daughter-in-law, son-in-law, and any other member of the employee's household.

5. *Parent* – A biological, adoptive, step or foster parent, or another person who stood "in loco parentis" to the eligible employee when the employee was a child by providing day-to-day care and financial support. The term does not include parent-in-law.

6. *Relative* - Related to Elected official/employee by blood or marriage within the second degree (I.C. 18-1361A). A relative of the second degree includes an aunt, uncle, grandparent, grandchild, niece, nephew, and first cousin.

7. *Spouse* - A husband or wife as defined or recognized under State law for purposes of marriage in the State where the employee resides.

V. Promotion & Transfer

A. Qualified City employees may be given preference over outside applicants to fill vacancies in the workforce without following the notice and selection procedures customarily required for hiring new employees. The City of Moscow strives to provide training and

development for employees and to offer employees promotions to higher-level positions when appropriate and as the position and funding becomes available. Promotions are encouraged, and supervisors may first consider current employees with the necessary qualifications and skills to fill vacancies unless external recruitment is considered to be in the City's best interest.

B. The requirements for the new position determine an employee's basic eligibility for promotion or transfer. To be eligible for a promotion or transfer, employees must meet the new position requirements, have a satisfactory performance record, and have no adverse disciplinary actions during the same six-month period. Employees may not request transfers for positions that are not currently open. Promoted and transferred employees are subject to the provisions of the INTRODUCTORY PERIOD policy and are subject to all requirements of the new position.

VI. Re-Employment of Former Employees

Former employees who left the City in good standing may be considered for re-employment. Former employees who resigned without written notice or were dismissed for disciplinary reasons may not be considered for re-employment. A former employee who is re-employed is considered a new employee from the date of re-employment unless the break in service is less than thirty days, in which case the employee will retain accumulated seniority. The length of service for the purposes of benefits is governed by the terms of each benefit plan.

DRAFT

Chapter 4 - Performance Evaluation

I. Introductory Period

All new employees, and all present employees transferred or promoted to a new job, are to be carefully monitored and evaluated for an initial introductory period. After satisfactory completion of the introductory period, those employees will be evaluated as provided for in the PERFORMANCE APPRAISALS section.

A. Unless otherwise specified within the job offer letter or other documentation, the introductory period shall last six (6) months from the date of hire. The introductory period for police officers will last up to one (1) year. Supervisors should observe carefully the performance of each employee in a new job position. Where appropriate, weaknesses in performance, behavior, or conduct are to be brought to the employee's attention for correction prior to the end of the introductory period.

B. Supervisors will prepare a written evaluation of the employee's job performance at the end of the introductory period. The evaluation shall include a recommendation as to whether the employee should continue in the position or whether the introductory period should be extended as described below. Copies of the evaluation are to be forwarded to the department manager/supervisor and Human Resources for inclusion in the employee's personnel file.

C. Employees will be allowed to continue in their new positions if they are given both a satisfactory evaluation by the end of their introductory period, and their supervisor's endorsement to continue in the job.

D. Employees who do not receive a satisfactory evaluation and endorsement may have their introductory period extended by thirty (30) day increments to demonstrate their ability to do the job if the supervisor feels additional time is warranted in order to achieve acceptable job performance. The introductory period may also be extended by the number of work days missed because of an excused absence.

E. Supervisors may recommend the termination of an employee at any time during their introductory period. A recommendation for termination should be submitted in writing to Human Resources for review and should include an evaluation and a listing of actions taken to assist the employee. Employees will not be entitled to the appeal process during their introductory period.

F. Transferred or promoted employees who are unable to perform satisfactorily in their new jobs may be returned to their original jobs, if a vacancy exists, or may be terminated.

II. Performance Appraisals

A. Job performance of each employee should be evaluated regularly by the employee's supervisor. Supervisors should complete performance appraisals upon the following occasions:

1. At the conclusion of their introductory period; and

2. Annually prior to the start of the calendar year.

B. In addition to scheduled appraisals, supervisors should discuss with employees any performance issues that warrant attention as they arise and should keep records of any significant incidents, which includes actions taken by the supervisor to address the performance issues or matters of concern.

C. Performance Appraisal Guidelines:

1. In evaluating employees, supervisors should consider such factors as the experience and training provided to the employee, the job description, and the employee's attainment of previously set objectives and goals. Other factors that normally should be considered include, but are not limited to, knowledge of the job, quantity and quality of work, promptness in completing assignments, cooperation, initiative, reliability, attendance, judgment, conduct, acceptance of responsibility, and adherence to City policies and procedures.

2. In completing evaluations, supervisors should prepare a written appraisal of each employee's job performance. Such an appraisal should include the supervisor's comments and recommendations, an action plan for both the employee and supervisor, and agreed upon performance goals for the next evaluation period if appropriate.

3. The supervisor's manager should review each supervisor's written evaluation to help assure that the evaluation has been properly completed in as fair and objective a manner as possible prior to the supervisor discussing the evaluation with the employee.

4. The supervisor and employee should meet and discuss the evaluation, assess the employee's strengths and weaknesses in a constructive manner, and set objectives and goals for the period ahead. The employee should be given the opportunity to examine the evaluation and make written comments about any aspect of it. The employee and supervisor should then sign and date the evaluation.

5. Employees may add written comments to their performance appraisal and may request a review by their supervisors' manager or Human Resources.

6. Information derived from the performance appraisal may be considered when making decisions affecting an employee including, but not limited to, training needs and opportunities, pay, promotion, transfer, or continued employment.

DRAFT

7. The final evaluation should then be forwarded to Human Resources for review and inclusion in the employee's personnel file.

DRAFT

Chapter 5 - Legal Requirements

I. Unlawful Workplace Discrimination, Harassment and Retaliation

A. Overview.

The City strives to maintain a supportive and civil workplace – one in which employees treat each other with respect and dignity. In keeping with these values, the City promotes equal employment opportunities and prohibits and does not tolerate unlawful workplace discrimination, harassment or retaliation. The following defined terms are applicable to this section:

1. *Legally protected class* means a personal characteristic that is protected by law. Title VII of the US Civil Rights Act of 1964 includes the following protected classes, race, color, national origin, religion, sex (including pregnancy, sexual orientation and gender identity), age (40 and older), disability, or any other characteristic protected by law.

2. *Participation in the workplace* includes all aspects of being an employee at the City, including recruitment, hiring, job performance, performance reviews, training, development, promotion, demotion, transfer, compensation, benefits, educational assistance, layoff and recall, participation in social and recreational programs, termination and/or retirement.

B. Workplace Discrimination

1. Workplace discrimination is disparate treatment of an individual as a result of their membership in a legally protected class with respect to their participation in the workplace. Adverse employment actions usually involve decisions made by supervisors, managers, or Elected Officials that affect the workplace status and benefits of employees.

2. Illegal adverse employment actions may include, but are not limited to, not hiring a qualified applicant due to their age, not promoting an employee due to their religious beliefs, denying an employee a raise due to their race, disciplining an employee more harshly than others due to their sex, and terminating an employee due to their national origin.

C. Workplace Harassment

1. Workplace harassment is unwelcome conduct that is directed to anyone in the workplace that interferes with their participation in the workplace. The offensive conduct must be severe or recurring such that it creates a work environment that a reasonable person would consider intimidating, hostile or abusive.

DRAFT

2. Offensive conduct may include, but is not limited to, offensive jokes, slurs, epithets or name calling, physical assaults or threats, intimidation, ridicule or mockery, insults or put-downs, offensive objects or pictures.

D. Workplace Sexual Harassment

1. Sexual harassment is a specific type of workplace harassment. Since it is particularly destructive to the work environment it is more thoroughly addressed here. Sexual harassment occurs when one or more persons are subject to unwelcome sexual advances, request for sexual favors, or other verbal, non-verbal, visual or physical harassment of a sexual nature such that it creates a hostile or offensive work environment.

2. Sexual harassment includes sexually harassing others of the same and/or different gender, gender identity or gender expression. Sexual harassment is unlawful whether it involves co-workers, supervisors, managers, Elected Officials, or customers of the City. Sexual harassment may include, but is not limited to:

   a. Leering, making sexual gestures, or displaying derogatory and or sexually suggestive objects, pictures, cartoons, posters or drawings;

   b. Sexually degrading language, derogatory comments, epithets, slurs, sexually explicit jokes or comments;

   c. Verbal or non-verbal unwanted sexual advances or propositions;

   d. Threatening or making reprisals after a negative response to sexual advances;

   e. Offering employment benefits such as raises, promotions and job retention in exchange for sexual favors;

   f. Unwanted physical conduct such as touching, massaging, pinching, patting, hugging; and

   g. Physical interference with normal work or movement including impeding or blocking movement.

E. Hostile Work Environment

Pursuant to the Idaho Human Rights Act (IHRA), in order to show that a work environment is sufficiently hostile, a plaintiff must show the occurrence of numerous improper acts which establish a pattern of conduct sufficiently severe or pervasive to alter the conditions of employment. Patterson v. State Department of Health & Welfare, 151 Idaho 310 (2011).

DRAFT

The standard to prove a hostile environment under the Idaho Human Rights Act (IHRA) is that the environment is both subjectively and objectively perceived as hostile based on a totality of the circumstances.

F. Workplace Retaliation

Workplace retaliation is when an employee is punished or negatively treated because the employee engaged in legally protected activity, including initiating a complaint of discrimination or harassment, providing information or assisting in an investigation or refusing to follow orders that would result in discrimination or harassment. Retaliation can result from employment action taken by a supervisor, manager, Elected Official or from acts of other employees.

Examples of conduct that might be considered retaliation for engaging in protected activity include assigning the employee to less desirable tasks or shifts in the office, denying an employee a promotion or raise, socially isolating an employee, playing practical jokes on the employee, and allowing other employees to be critical of an employee for participating in a workplace investigation into alleged discrimination or harassment.

G. Reporting Process

1. The City encourages employees to report any perceived incident of harassment, discrimination or retaliation to which they have been subjected or have witnessed, regardless of the offender's identity or position. Employees, if comfortable doing so, may advise the offender that their behavior is unwelcome and request that it be discontinued immediately. This action alone may stop the behavior which is in process, and may thereby resolve the immediate situation. Of course, the employee may prefer to disengage from the situation and pursue the matter through the City's reporting procedure, and is encouraged to do so.

2. The following steps must be followed to report and for the City to then investigate incidents of unlawful discrimination, harassment, sexual harassment, retaliation, or the development of a hostile work environment.

    a. An employee who believes they have been unlawfully discriminated, harassed or retaliated against, or who observes or knows about behavior in the workplace that could be considered unlawful discrimination, harassment or retaliation, should report it to their supervisor, manager, Human Resources, City Supervisor, or City Attorney as soon as possible after the observed or experienced incident.

    b. The individual receiving the report must then forward it to Human Resources. If Human Resources is the subject of the complaint, the report must then be forwarded to the City Attorney.

    c. Once such a complaint has been made, the complaint cannot be withdrawn by the complainant without a determination that it was made erroneously.

d. Human Resources/City Attorney (whoever initially received the complaint) should promptly review the complaint and consult with the City Attorney (or the City Attorney should promptly review the complaint and consult with the City Supervisor).

e. In appropriate circumstances, the employee who is alleged to have committed the offense may be placed on paid or unpaid administrative leave pending the investigation into the allegations, such determination is made by the City Supervisor.

f. Human Resources, in consultation with the City Attorney (or City Attorney in consultation with the City Supervisor), will engage an appropriate person to investigate the complaint. The investigator should be a neutral party.

g. The investigator will interview the complainant, the employee alleged to have committed the offense(s), and any relevant witnesses.

h. At the conclusion of the investigation, the investigator will submit a report of the findings to Human Resources (or City Attorney), who will then route it as appropriate.

   i. Human Resources (or City Attorney) and/or the appropriate supervisors and legal counsel for the City will meet separately with both the complainant and the employee alleged to have committed the offense(s) to notify them in person of the findings of the investigation.

   ii. The complainant and the employee alleged to have committed the offense(s) may submit written statements to Human Resources (or City Attorney) and/or supervisors challenging the factual basis of the findings. Unless circumstances prevent, the statement must be submitted no later than 5 working days after the meeting in which the findings of the investigation are discussed.

i. After Human Resources (or City Attorney) and/or supervisors have met with both parties and reviewed the documentation, and after consultation with legal counsel for the City, a decision will be made as to what action, if any, should be taken by the City Supervisor.

j. At the conclusion of this complaint procedure:

   i. The accused will be informed as to the disciplinary action, if any is determined to be needed.
   ii. The complainant should be informed that appropriate action, if any, has been taken. Because disciplinary personnel matters are confidential, details of the specific discipline should not be shared with the complainant.

3. Any retaliation against an individual for reporting harassment, discrimination or hostile work environment or for participating in an investigation of a claim related to any of the such, is serious and, like the act of harassment, discrimination or hostile work environment itself, will be subject to an investigation and possible disciplinary action. Acts of retaliation should be reported promptly.

H. Disciplinary Action

If it is determined that unlawful discrimination, harassment or retaliation has occurred, an appropriate course of action will be taken by the City. The action will depend on the following factors:

1. The severity, frequency and pervasiveness of the conduct;

2. The conduct of the respective employees;

3. Prior complaints made against the employee alleged to have committed the offense; and

4. The quality of the evidence (first-hand knowledge, credible corroboration etc.).

If problematic conduct is revealed in the investigation, corrective action may be taken even if the investigation is inconclusive or if it is determined that there has been no unlawful discrimination, harassment or retaliation.

I. Confidentiality
Confidentiality will be maintained to the fullest extent possible in accordance with applicable federal, state and local law. However, a complete and thorough investigation of the allegations will require the investigator to inform witnesses of certain aspects of the complaint in order to obtain an accurate account of the actions of the parties involved. The City's insurer may also be engaged to assist in any or all phases of any proceeding or investigation.

II. Drug-Free Workplace Policy

A. Expectations

1. The City recognizes alcohol and drug abuse as potential health, safety and security problems. The City expects all employees to assist in maintaining a work environment free from the effects of alcohol, drugs or other intoxicating substances. Compliance with this substance abuse policy is made a condition of employment, and violations of the policy may lead to discipline and/or termination.

2. All employees are prohibited from engaging in the unlawful manufacture, possession, use, distribution or purchase of illicit drugs, alcohol or other intoxicants, as well as the

misuse of prescription drugs on City premises or at any time and any place during working hours. While we cannot control the behavior of employees off the premises on their own time, we certainly encourage employees to behave responsibly and appropriately at all times. All employees are required to report to their jobs in an appropriate mental and physical condition, ready to work.

3. Substance abuse is an illness that can be treated. Employees who have an alcohol or drug abuse problem are encouraged to seek appropriate professional assistance. Employees may inform their immediate supervisor, manager, or the Human Resources Office for assistance in seeking help, including possible coverage under the City's medical insurance plan to address substance abuse. When work performance is negatively impacted by an employee's substance use, the employee's admission to or use of a treatment or other program does not preclude appropriate disciplinary action by the City, which may include termination.

B. Reasonable Suspicion Test

1. Behavior exhibited by an employee that causes reasonable suspicion to believe an employee may be under the influence of alcohol, drugs or other intoxicating substances should be reported immediately to a supervisor. Supervisors should then immediately report to Human Resources or designee. Human Resources or designee, together with the supervisor, will determine whether the employee should be examined by a physician or clinic and whether or not the employee should be tested for drugs, alcohol, and/or any other intoxicating substances (reasonable suspicion test).

2. Employees believed to be under the influence of drugs, narcotics, alcohol, or any intoxicating substance will be required to leave the premises. Human Resources or supervisor will arrange safe transit for any employee who is required to leave. Employee will be required to utilize sick leave or vacation leave for this time away from work.

C. Drug Testing

1. Pre-employment: Only Police Officers and employees filling positions requiring a commercial driver's license and subject to Federal Department of Transportation regulations are required to complete pre-employment drug and alcohol tests.

2. Random: No drivers other than CDL holders will be randomly tested for drugs, alcohol, or other intoxicating substances.

3. Reasonable Suspicion: Drug and alcohol tests may be conducted on any employee where there is a reasonable suspicion that the employee is impaired by drugs, alcohol, or other intoxicating substances. The basis of suspicion indicating drug or alcohol impairment may be a specific contemporaneous event or conduct evidencing impairment observed over a period of time.

4. Post-Accident Testing:

   a. A driver who is involved in any accident must notify the City of the accident as quickly as possible and comply with the instructions given them relative to their taking drug and alcohol screening tests.

      i. When operating a City vehicle on public or private roadways or private property – a post-accident drug and alcohol test is required.

      ii. When operating a City vehicle on City property – the supervisor shall determine if a drug or alcohol test is required.

   b. When required, alcohol screening testing must be administered within two (2) hours of the accident and drug screening testing must be administered within thirty-two (32) hours of the accident. Any driver required to be tested under this section must remain readily available for such testing and such driver may not consume drugs, alcohol and/or an intoxicating substance within thirty-two (32) hours of the accident.

   c. A driver who is seriously injured and cannot provide a specimen for testing will be required to authorize the release of relevant hospital reports that would indicate the presence of drugs, alcohol, and/or other intoxicating substances in such driver's system at the time of the incident.

5. Refusal to Test:

   Federal regulations and standards established by the U.S. Department of Transportation and standards established by the U.S. Department of Transportation prohibit CDL license holders from refusing a test. The following are some examples of conduct that the regulations define as refusing a test:

   a. Failing to appear for any test after you were directed to do so by the City.

   b. Failing to remain at the testing site until the testing process is completed.

   c. Failing to provide a urine or breath sample.

   d. Failing to permit the observation or monitoring of your providing a urine specimen.

   e. Failing to provide a sufficient urine or breath sample (when it has been determined through the required medical evaluation that there was not adequate medical explanation for the failure).

   f. Failing to take a second test when directed to do so.

DRAFT

g. Failing to cooperate with any part of the testing process, including but not limited to:

   i. Refusing to empty your pockets

   ii. Behaving in a confrontational manner with the collector

h. Failing to wash your hands when directed to do so.

i. Failing to obtain a medical evaluation as part of a "shy bladder" or "shy lung" procedure.

j. Failing to sign Step 2 of the Alcohol Test Form.

k. Providing a urine specimen that is verified as adulterated or substituted.

l. Failing to follow the observer's instructions during a directly observed urine collection.

m. Possessing or wearing a prosthetic or other device that could be used to interfere with the collection process

n. Admitting to the collector or MRO that you adulterated or substituted a specimen.

6. Consequences of a Refusal to Test:

   A determination of refusal to test has the same consequences as those who receive a positive test. CDL employees who refuse to submit to a test will be subject to discipline, up to and including termination.

D. Counseling

1. Employees who are experiencing work-related or personal problems resulting from drug, narcotic, or alcohol abuse or dependency may request or be required to seek counseling help. City-sponsored or required counseling will be kept confidential and will not have any influence on performance appraisals. Job performance alone, not the fact that an employee seeks counseling, is to be the basis of all performance appraisals.

2. Any employee who is abusing drugs, alcohol, and/or other intoxicating substances may be granted a leave of absence to undertake rehabilitation treatment. The employee will not be permitted to return to work until certification is presented to Human Resources that the employee is capable of performing their job. Failure to cooperate with an agreed-upon treatment plan may result in discipline, up to and including termination. Participation in a treatment program does not insulate an employee from the imposition of discipline for violations of this or other City policies.

3. Employees who violate this policy will be subject to the Employee Discipline Policy.

E. Commercial Drivers Licenses

1. Employees whose jobs require a valid Commercial Driver's License (CDL) license must keep their license on their person at all times when working. Employees who are at work without their CDL license will be sent home and/or will be subject to disciplinary action.

2. Employees must notify their supervisor and Human Resources immediately if there has been any action taken against their license for any traffic violations (except parking), including but not limited to suspension, revocation, cancellations or if you are disqualified from CDL driving. The requirement to report is required no matter what type of vehicle you were driving when the action against the employee's license occurred. The U.S. Department of Transportation's Federal Motor Carrier Safety Administration passed The Omnibus Transportation Act, which was intended to create an alcohol and controlled substance free transportation industry. The controlled substance and alcohol testing that is conducted under this act is called Federal or DOT (Department of Transportation) testing. Where there are differences in the requirements under the Omnibus Transportation Act and this policy, the Act takes precedence.

3. Effective January 6, 2020 the U.S. Department of Transportation established the Federal Motor Carrier Safety Administration Clearinghouse. Clearinghouse rules and regulations apply to a variety of CDL drivers including municipal vehicle drivers. As the City of Moscow employee's municipal vehicle drivers, the City complies with all Clearinghouse regulations.

   https://clearinghouse.fmcsa.dot.gov/Resource/Index/Factsheet

4. This includes a requirement to conduct both electronic queries and traditional manual inquiries with previous employers to meet the three-year implementation timeframe (through January 6, 2023) as required by FMCSA's drug and alcohol use testing program, for checking CDL driver violation histories.

5. The following policy information regarding the use of controlled substances and alcohol, required tests, testing procedures, test results and their consequences, apply to CDL-covered employees performing safety-sensitive duties.

F. Employees Subject to Federal DOT Testing

The Federal DOT alcohol and controlled substance testing rules apply to every person who operates a commercial motor vehicle (CMV) in interstate or intrastate commerce. This includes individuals who only operate a CMV occasionally or in an emergency.

DRAFT

G. Definition of Safety Sensitive Functions

A CDL employee is performing a safety sensitive function at the following times:

1. All time on City property, public property, or other property waiting to be dispatched to drive;

2. All time inspecting, servicing or conditioning any CMV at any time;

3. All CMV driving time;

4. All time other than driving time in or upon any CMV;

5. All time loading or unloading a vehicle, supervising or assisting in the loading or unloading, attending a vehicle being loaded or unloaded, remaining in readiness to operate the vehicle, or in giving receipts for shipments loaded or unloaded;

6. All time spent performing driver requirements relating to accidents; and

7. All time repairing, obtaining assistance, or remaining in attendance upon a disabled vehicle.

H. Prohibited Conduct - CDL-Covered Employees May Not:

1. Use any illicit (illegal) controlled substance. *

2. Possess any illegal controlled substance while assigned to or performing safety-sensitive functions.

3. Use any legal prescription which is a controlled substance (or possess it while assigned to or performing safety-sensitive functions), unless taking it in accordance with the instructions of a licensed medical provider, and that medical provider has advised that it will not adversely affect your ability to safely operate a CMV.

4. Use or possess alcohol while assigned to or performing safety-sensitive functions. This includes anything that contains alcohol, such as mouthwash and cough medication.

5. Perform safety-sensitive functions within eight (8) hours after using alcohol.

6. Report for duty or remain on duty if:

   a. Under the influence or impaired by alcohol; or

   b. Have a blood alcohol concentration of .02 or greater

DRAFT

7. Refuse to submit to any test for alcohol or controlled substances (refusal also means adulterating or substituting a specimen).

*Medical marijuana, even if legally prescribed in a state, is an illegal drug under Idaho state and federal law. The use of medical marijuana is prohibited conduct for CDL-covered employees.

I. Consequences of Engaging in Prohibited Conduct:
Engaging in prohibited conduct has the same consequences as those for a positive test.

J. Prescription Medicine and Over-The-Counter (OTC) Drugs

These may affect a driver's fitness for duty or ability to perform duties safely. It is the CDL-covered employee's responsibility to know how the medications taken for health reasons affect the ability to perform the employee's job in a safe manner. Employees are encouraged to always ask their medical provider how any medication they are taking will affect their ability to operate a CMV safely.

DRAFT

Chapter 6 - Discipline & Termination

I. Employee Discipline

A. The Employee Discipline Policy provides the process and progressive measures to address employees' workplace actions and/or violation of the City's standards of conduct and job performance requirements as documented within the City of Moscow Personnel Policy Manual. These procedures are directory in nature and minor variations in the processes set forth herein will not affect the validity of any actions taken pursuant to this policy.

B. The following framework guides the progressive steps to be taken when an employee violates employment policies or fails to adequately perform their duties. Nothing contained herein is intended to limit the reasons for which the employee may be disciplined, up to and including termination of employment. In addition, nothing contained herein is intended to change the at-will nature of the employment for those employees identified as at-will in the City of Moscow Personnel Policies - Employee Classification Policy. Progressive steps may be implemented in order to encourage improved performance or attitude, but are not required. The City may take any of the prescribed steps, in any order, when a supervisor deems an action of the employee is serious enough to warrant a certain step.

1. Step 1: Counseling and Verbal Warning – intended to provide an opportunity for the immediate supervisor to bring attention to the existing performance or conduct issue. The supervisor will discuss the nature of the problem or the violation of City's policies with the employee. The supervisor will clearly describe performance and/or conduct expectations, support the supervisor will provide to assist the employee in improving their performance and/or conduct, and steps the employee must take to resolve the problem. This session is documented in the Verbal Warning Form and available from Human Resources.

2. Step 2: Written Warning – involves more formal documentation of the performance or conduct issues and consequences. At Step 2, the immediate supervisor and department manager or supervisor will meet with the employee to review the issue, and any prior relevant corrective action plans as appropriate. The immediate supervisor will outline the consequences for the employee's continued failure to meet performance or conduct expectations, as well as the support the supervisor will provide to assist the employee in successfully correcting the performance or conduct issue. The written warning may also include a statement indicating that the employee may be subject to additional discipline, up to and including termination, if immediate and sustained corrective action is not taken. This step is documented in the Written Warning Form available from Human Resources.

3. Step 3: Suspension and Final Written Warning – some performance, conduct or safety incidents are so problematic and harmful that the most effective action may be the temporary removal of the employee from the workplace. Suspensions that are recommended as part of the normal sequence of the progressive discipline policy and procedures are subject to approval from the immediate supervisor, department manager

or supervisor, Human Resources, and the City Supervisor. This step requires a memo documenting the specific performance or conduct issue(s), including documentation of all prior verbal and written disciplinary actions taken to address the performance issues. The memo and accompanying documentation shall be sent to Human Resources for review, followed by review and approval by the City Supervisor. Human Resources will provide the employee and supervisor with the written notice of suspension.

4. Step 4: Recommendation for Termination of Employment – the most serious step in the progressive discipline process is a recommendation to terminate employment. The City of Moscow will generally follow the progressive nature of this policy by first providing counseling, a written warning, issuing a final written warning, or suspending the employee from the workplace, before proceeding to a recommendation to terminate employment. In cases of serious misconduct or any time a supervisor determines it is necessary (including by example, but not limited to, a major breach of policy, safety violation, or violation of law), the City reserves the right to escalate disciplinary actions, up to and including immediate suspension and/or termination, depending on the circumstances of each situation and the nature of the offense. Recommendations to terminate employment must be approved by the immediate supervisor, department manager or supervisor, Human Resources, and City Supervisor. Notices of termination are prepared by Human Resources to provide for proper liability review.

C. Discipline and Termination Process

1. If an employee is not meeting City standards of conduct or performance, the employee's supervisor should take the following actions:

   a. Meet with the employee to discuss the matter.

   b. Inform the employee of the nature of the problem, facts which support the concern, support or coaching to be provided to the employee and the action the employee is expected to take to correct the issue.

   c. Complete a Verbal Warning Form, available from Human Resources, that includes the date the discussion is held, supervisor and employee names, issue with date of occurrence, and support the supervisor agrees to provide and corrective actions expected.

   d. Forward form to Human Resources for filing in personnel file.

2. If there is a second occurrence, the supervisor should meet again with the employee to provide further feedback taking the following actions:

   a. Meet with the employee to discuss the matter.

DRAFT

b. Inform the employee of the nature of the problem, facts which support the concern, support or coaching to be provided to the employee and the action the employee is expected to take to correct the issue.

c. Complete a Written Warning Form, available from Human Resources, to serve as the official written reprimand to include the following:

ii. Summary of instances or discussion held regarding the issue to date as outlined in the original Verbal Warning Form.

iii. Summary of current instance, expectations of employee moving forward, corrective action the employee is required to take, support and coaching City is committed to providing, and consequences for not meeting expectations.

d. Forward form to Human Resources for filing in personnel file.

D. If there are additional occurrences the supervisor or manager should confer with the City Supervisor and Human Resources to take one or more of the following action(s), depending on the situation and severity of the conduct:

1. Issue an additional written reprimand or warning; or

2. Suspend the employee with or without pay; or

3. Suspend the employee with or without pay indefinitely and recommend termination; or

4. Other such action as deemed appropriate.

E. Human Resources under usual circumstances should review and approve a recommendation for termination before any final action is taken. An employee who believes that discipline received is too severe or who disagrees with the reason(s) for the discipline, may utilize the grievance procedure outlined in the Employee Grievance Policy.

II. Employee Grievance

A. It is the policy of the City that current employees should have an opportunity to present their work-related complaints and to appeal employment related management decisions through a grievance procedure. The City will attempt to promptly resolve all grievances that are appropriate for processing under this policy. The grievance procedure is not available to an employee who is recommended for termination or to an employee selected for layoff. Employees are encouraged to talk to each other to resolve their problems. Other methods of resolution may include communicating with their direct supervisor in order for the supervisor to try to resolve the problem. Supervisors should try to resolve any grievance as quickly as possible. When they're unable to do so, they should refer to Human Resources and cooperate with all other procedures.

B. When employees have an issue with their direct supervisor, it is encouraged that they should first try to discuss the matter and resolve it between them. In that case, they're advised to request an informal meeting.

C. If the grievance relates to a supervisor behavior that can bring disciplinary action (e.g. sexual harassment or violence), employees should refer directly to Human Resources or the next level supervisor.

D. Human Resources will assist with the formal Grievance Procedure as follows:

1. Work with employee to fill out a Grievance Form;

2. Work with employee to ensure the matter is understood completely;

3. Communicate the issue as appropriate to the City Supervisor and the City Attorney;

4. Provide the employee who faces allegations with a copy of the grievance;

5. As appropriate, organize mediation procedures (e.g. arranging a formal meeting);

6. As appropriate, investigate the matter or engage the assistance of an investigator when needed;

7. Keep employees informed throughout the process;

8. Communicate the formal decision to all employees involved;

9. Take actions to ensure the formal decision is followed;

10. Process appeals by gathering more information and investigating further; and

11. Keep accurate records.

E. The grievance procedure may vary according to the nature of a grievance. For example, if an employee is found guilty of actions not allowed as highlighted in these policies, the City will engage in the disciplinary process.

III. Termination of Employment

A. Termination

1. The City may terminate employment because of an employee's resignation, discharge, or retirement; or a permanent reduction in the work force.

2. Employees shall give written notice of their intent to resign. Failure to give written notice will result in ineligibility for re-employment. It is suggested that supervisory and

DRAFT

managerial employees give four weeks' notice. All other employees should give at least two weeks' notice.

3. Employees who are absent from work for three consecutive days without being excused or giving proper notice will be considered as having voluntarily terminated their employment.

B. Voluntary Resignation

Employees who desire to end their employment with the City shall send notice of resignation to Human Resources to initiate employee exit process and open hiring for replacements as appropriate. Employees who voluntarily terminate their employment and leave in good standing may be eligible for future employment if recommended by their supervisor.

C. Involuntary Resignation

1. Supervisors shall send recommendations for termination to Human Resources, including all information and documentation as outlined in the Employee Discipline Policy, before any final action is taken.

2. As determined by Human Resources in consultation with the City Supervisor, City Attorney and related manager, administrative leave with or without pay may be extended to the affected employee in order to provide the necessary time and separation for review of the recommendation for termination.

3. Following proper review and/or investigation and consultation with ICRMP, a decision will be made to officially terminate the employee, or to take such other action as deemed appropriate.

4. The decision to terminate shall stand unless the employee shows by clear and convincing evidence that the decision to terminate is premised only upon inaccurate information or would constitute a violation of applicable law. In this instance, the Employee Grievance Policy would apply.

D. Compensation, Benefits and City Property upon Termination

Human Resources is responsible for securing the return of funds advanced and/or all City property in the possession of terminated employees. If the employee owes the City any monies or is responsible for any lost or damaged property, such accounts are to be settled by deduction from final pay. Human Resources will also notify terminating employees who are covered by the City's group health plan of their right to continue coverage under that plan, as required by law.

DRAFT

IV. Name-Clearing Hearing

A. Eligibility

1. All employees are at-will employees. At-will employees may experience adverse consequences such as unlawful discrimination or retaliation based on allegations of dishonesty, immorality or criminal misconduct. A public employee who is demoted with a reduction in pay or terminated from employment based on such allegations may be provided an opportunity to be heard, also known as a name-clearing hearing, when one is requested. Failure to pursue the opportunity to be heard at a name-clearing hearing procedure constitutes a waiver of this opportunity.

2. It is unlawful to discriminate or retaliate based on race, color, religion, sex, gender, sexual orientation, gender expression or identity, age, marital or familial status (including pregnancy), national origin, or non-job-related physical or mental disability, or any other characteristic protected by law when not a bona fide occupational qualification. The City does not condone discrimination on the basis of the foregoing. It is unlawful to retaliate against an employee for initiating a charge of discrimination or harassment, or for assisting in any way in an investigation of such charges.

3. Issues involving job performance or employee attitude, which do not include allegations of discrimination, retaliation, dishonesty, immorality, or criminal misconduct, are not the proper subject of a name-clearing hearing and will not be heard.

B. Name Clearing Process

1. Within fourteen (14) days of employee's termination or demotion, the employee may submit a written allegation of unlawful discrimination or retaliation, or the basis for entitlement to a name-clearing hearing, stating particularly the basis for the requested hearing. Written allegations that are untimely submitted or that fail to state a particular, legally recognized basis will not be granted an opportunity to be heard. An employee will be promptly notified if a requested hearing is denied.

2. An employee alleging unlawful discrimination or retaliation, and who is requesting a name–clearing hearing, will meet with the City Supervisor. The hearing will not exceed one (1) hour in duration.

3. Minutes of the hearing may be made and maintained as part of the personnel record.

4. The employee's supervisor may provide a brief written statement at least twenty-four (24) hours prior to the hearing in response to the charges. The City Supervisor may require the employee's supervisor to participate in the hearing.

5. The employee will be provided an opportunity to present evidence upon which the claims are based.

DRAFT

6. The City Supervisor may ask questions during this process.

7. The employee may question participants during this process.

8. The Idaho Rules of Evidence do not apply to this opportunity to be heard or name-clearing hearing.

9. After the hearing, the City Supervisor will consider the information submitted and any other pertinent information in the City's records. The City Supervisor will then issue a written decision concerning the employee's allegations and will include the reasons for the City Supervisor's determination.

DRAFT

Chapter 7 - Hours of Work

I. Hours of Work

A. The City shall establish the time and duration of working hours as required by the workload, customer service needs, the efficient management of personnel and departmental resources, and any applicable law.

B. Each supervisor determines the schedule of hours for all classifications of employees (exempt and non-exempt) with final determination by the Deputy City Supervisor or City Supervisor. Employees are to be informed of their daily schedule of hours of work, including meal and rest periods, and any changes deemed necessary or desirable by the City.

C. Supervisors may schedule overtime or extra shifts when, and to the extent, it is deemed necessary. Supervisors will assign overtime to non-exempt employees in a particular job for which overtime is required. Employees are not permitted to work overtime without the prior approval of their supervisor.

D. Employee attendance at lectures, meetings, and training programs, including travel time, will be considered hours of work if such attendance is requested or approved by their Supervisor.

E. At their discretion, supervisors may allow non-exempt employees to make-up lost time during a given workweek, if the make-up time does not result in placing the employee on overtime.

F. All non-exempt employees are required to complete an individual time record showing the daily hours worked.

II. Work Period

A. Per the Fair Labor Standards Act (FLSA), an employee's work period is a fixed and regularly recurring period of one hundred sixty-eight (168) hours during seven (7) consecutive twenty-four (24) hour periods. It need not coincide with the calendar week but may begin on any day and at any hour of the day. Different work periods may be established for different positions or groups of employees such as employees engaged in fire protection or law enforcement (FLSA, 29 U.S.C § 207(k)).

B. Work Periods for the City of Moscow are as follows:

1. Non-Exempt, Non-Law Enforcement, Non-Fire Personnel Work Period – Seven (7) Days

    a. Begins at midnight on Sunday of each week

b. Concludes at 11:59 p.m. of the succeeding Saturday

c. For the purposes of payroll processes, two work periods make up one pay period. Averaging of hours over two or more defined work periods is not permitted.

2. Sworn Law Enforcement Officers and Fire Personnel Work Period – Fourteen (14) Days

a. Begins at midnight on Sunday of the first week of the work period

b. Concludes at 11:59 p.m. on the concluding Saturday of the work period

3. Exempt Personnel

Not applicable under FLSA guidelines.

III. Attendance and Punctuality

A. The City requires all employees (exempt and non-exempt) to report for work punctually and to work all scheduled hours and any required overtime. Excessive tardiness and poor attendance disrupt work flow and customer service and will not be tolerated.

B. Supervisors will notify employees of their starting, ending, and break times. Employees are expected to be engaged in carrying out their duties during all scheduled work time and should be ready to begin working at their scheduled starting time.

C. Employees must notify their supervisor as far in advance as possible whenever they are unable to report for work, know they will be late, or must leave early. Such notification should include a reason for the absence or tardiness and an indication of when the employee can be expected to report for work. If the supervisor is unavailable, notification should be made to supervisor's supervisor.

D. Employees are to be compensated during authorized absences in accordance with City policies. Non-exempt employees (those employees subject to the minimum wage and overtime requirements of the Fair Labor Standards Act) will not receive compensation for time missed because of tardiness or early departure if the time missed exceeds ten minutes after starting time or before quitting time. Failure to properly notify the City of any absence may result in loss of compensation during the absence and may be grounds for disciplinary action, up to and including termination.

E. Employees who are delayed in reporting for work more than thirty minutes and who have not notified their supervisor of the expected tardiness may lose their opportunity to work the balance of the work day. In addition, employees who report for work without proper equipment or in improper attire may not be permitted to work. Employees who report for work in a condition considered not fit for work, whether for illness or any other reason, will not be allowed to work.

F. The City expects each employee to make reasonable efforts to report to work in inclement weather situations. If weather or traveling conditions delay or prevent an employee from reporting to work, they should notify their supervisor as soon as possible. If an employee is unable to report to work at all due to weather or traveling conditions, the employee will be expected to charge the absence to accrued vacation leave or compensation time.

G. Occasionally, severe weather conditions may necessitate closing some City offices. If office closure occurs, employees may have the opportunity to make up the missed time. Any missed time must be made up within the work period of the closure. Otherwise, missed time must be charged to accrued vacation or compensatory time. Missed time cannot be charged to sick leave unless there is a qualifying reason for the use of sick leave in accordance with this policy.

H. Employees will not be required or permitted to work any period of time before or after scheduled starting or quitting times for the purpose of making up time lost if the result of making up such time will put the employee in overtime status during the workweek.

I. Employees must report to their supervisor as soon as possible when late or absent, to explain the circumstances surrounding their tardiness or absence, and, when applicable, certify that they are fit to return to work. When appropriate, the supervisor should counsel the employee on the importance of good attendance and warn that excessive tardiness or absences will lead to discipline, up to and including termination.

J. Unauthorized or excessive absences or tardiness will result in disciplinary action, up to and including termination. An absence is considered to be unauthorized if the employee has not followed proper notification procedures or the absence has not been properly approved.

K. Employees who are absent from work for three consecutive days without giving proper notice to the City will be considered as having voluntarily quit and/or resigned. At that time, the City will formally note the termination and advise the employee of the action by certified mail to the employee's last known address.

IV. Rest and Meal Periods

Idaho law does not require employers to give breaks or meal periods. However, the City of Moscow is committed to providing a work environment that supports employees' best efforts. As such, rest and meal periods are provided for employees as follows:

A. Rest Periods

1. All employees are permitted a fifteen (15) minute paid rest break for each four-hour work period unless conditions do not allow. Breaks are not permitted at either the beginning or end of the workday to offset arrival and departure times. Employees who choose to remain at work during rest breaks are not entitled to leave before the scheduled quitting time and will not receive extra pay for the time worked. Employees

who voluntarily work through their rest breaks will not be paid additional compensation.

2. Time spent on rest breaks will be compensated as working time, and employees are not required to sign out and in on their time cards. However, employees are expected to be punctual in starting and ending their breaks.

B. Meal Periods

1. All employees who work eight or more hours in a day are required to take an unpaid meal break of thirty (30) to sixty (60) minutes depending on operating requirements. Part-time employees scheduled to work more than five consecutive hours during any workday will receive a meal break of the same duration as full-time employees in their department. Meal breaks are not counted toward hours worked.

2. Employees are to be completely relieved from duty during their meal break. If a non-exempt employee is required by their supervisor to perform any work duties while on their meal break period, the employee must be compensated for the time spent performing work duties. The time spent working during the meal break will be counted toward the total hours worked.

C. Enforcement

Supervisors are responsible for scheduling the time for employee rest and meal periods and should take into consideration the workload and the nature of the job performed. Supervisors may also schedule the place for rest breaks. Whenever necessary, the frequency, time, and place of meal and rest periods may be changed.

V. On-Call and Call-Back

A. Applicability

1. The City of Moscow provides critical services to its residents. As such, employees may be required to be available and to work outside their regular schedule. The purpose of this policy is to provide a consistent method throughout all City departments to compensate employees for On-Call shifts and Call-Back responses. Specifically, this policy sets forth status and pay guidance for non-exempt regular employees.

   a. Temporary employees may not take On-Call shifts and do not qualify for On-Call, or Call-Back compensation.

   b. Exempt employees are paid a salary that reflects the full responsibility of the position, including being On-Call or being called back to work, and are not eligible to receive On-Call or Call-Back pay.

2. Compensatory time may be earned for both On-Call and Call-Back compensation. As outlined in the Compensatory Time section of these Personnel Policies, compensatory

time is limited to 80 hours at any given time. The use of earned compensatory leave depends upon the department's ability to operate effectively during a requested absence.

B. On-Call Status

1. On-Call shift hours usually coincide with regular shift hours. Any employee may be assigned to an On-Call status, which requires the employee to be accessible, available, and able to report for duty if called. Such shifts may vary in beginning and ending times from department to department or division to division and are subject to change by an administrative decision as dictated by workload needs.

2. Supervisors are responsible for maintaining a roster of all qualified employees for On-Call, determining the need for availability, assigning employees to On-Call status, and maintaining an equitable rotation schedule. On-Call shifts are to be scheduled in 24-hour increments.

C. On-Call Compensation

On-Call compensation is calculated at two (2) hours of pay at time and one-half (1½) the regular hourly pay rate per On-Call shift; Call-Back compensation may be taken as compensatory time.

D. Call-Back Status

When a non-exempt employee is called back to work from On-Call status or otherwise at a time not previously scheduled, response time for On-Call personnel should average thirty (30) minutes but is managed operationally by each department/division.

E. Call-Back Compensation

A minimum of two (2) hours pay at one and one-half (1½) time the regular hourly pay rate, even if the time spent back on the job is less than two (2) hours. Hours worked that exceed two (2) hours are also paid at one and one-half (1½) time the regular hourly pay rate as actual hours worked. Drive time to and from the worksite is considered hours worked for Call-Back compensation. Call-Back compensation may be taken as compensatory time.

VI. Telecommuting

A. Overview

1. Telecommuting allows employees to work at home, on the road, or in a satellite location for all or part of their work period. The City of Moscow considers telecommuting a viable, flexible work option when both the employee and the job are suited to such an arrangement. Telecommuting may be appropriate for some employees and positions but not for others. Telecommuting is not an entitlement, it is not a City-

DRAFT

wide benefit, and it in no way changes the terms and conditions of employment with the City of Moscow.

2. Telecommuting can be informal, such as working from home for a short-term project or on the road during business travel, or a formal, set schedule of working away from the office as described below. Either an employee or a supervisor can suggest telecommuting as a possible work arrangement.

3. Any telecommuting arrangement made will be on a trial basis to be determined by the supervisor with the approval of the City Supervisor. Any arrangement may be discontinued at the sole discretion of the City. Every effort will be made to provide 2 weeks' notice of such change to provide time to address issues that may arise from the termination of a telecommuting arrangement. There may be instances, however, when no notice is possible.

B. Eligibility

1. Individuals requesting formal telecommuting arrangements must be employed with the City of Moscow for a minimum of twelve (12) months of continuous, regular employment and must have a satisfactory performance record, unless in cases of extenuating circumstances. Before entering into any telecommuting agreement, the employee and supervisor will evaluate the suitability of such an arrangement, reviewing the following areas:

   a. Job responsibilities. The employee and supervisor will discuss the job responsibilities and determine if the job is appropriate for a telecommuting arrangement.

   b. Performance measurement. The employee and supervisor will discuss the feasibility of developing a comprehensive work plan with consistent and measurable progress points.

   c. Employee suitability. The employee and supervisor will assess the employee's needs and work habits, compared to traits customarily recognized as appropriate for successful telecommuting arrangements.

   d. Equipment needs, workspace design considerations, and scheduling issues. The employee and supervisor will review the physical workspace needs and the appropriate location for the telework.

   e. Tax and other legal implications. The employee must determine any tax or legal impact under IRS, state and local government laws, and restrictions of working out of a home-based office. Responsibility for fulfilling all obligations in this area rests solely with the employee.

2. Should the employee and supervisor agree that a telecommuting arrangement may work, a draft Telecommuting Work Arrangement Form is required for review by the Deputy City Supervisor (or City Supervisor) of the operational group. If approved by the Deputy City Supervisor, the proposal is then forwarded to the City Supervisor. If the City Supervisor approves the proposal, a trial period is determined, and the arrangement may proceed.

3. Evaluation of employee performance during the trial period will include regular interaction by phone and e-mail between the employee and the supervisor, and weekly face-to-face meetings to discuss work progress and problems. At the end of the trial period, the employee and supervisor must complete an evaluation of the arrangement. Should it be determined that the needs of the employee and City are being met, any recommendations for modifications, and a request to continue the arrangement, must be submitted to the City Supervisor for approval. Evaluation of employee performance beyond the trial period will be consistent with employees working in-office in both content and frequency. Such assessment will focus on work output and completion of objectives as well as time-based performance.

4. An appropriate level of communication between the employee and supervisor is required as part of the discussion process and development of the telecommuting arrangement request. The supervisor and employee will communicate at a level consistent with peer employees working at the office or in a manner and frequency that is appropriate for the job and the individuals involved.

C. Equipment

1. On a case-by-case basis, the City of Moscow will determine, with information supplied by the employee and the supervisor, the appropriate equipment needs (including hardware, software, modems, phone and data lines, and other office equipment) for each telecommuting arrangement. The Human Resource and Information System Departments will serve as additional resources in this matter.

2. Equipment supplied by the City will be maintained by the City. Equipment supplied by the employee, if deemed appropriate by the City, will be maintained by the employee. The City of Moscow accepts no responsibility for damage or repairs to employee-owned equipment. The City of Moscow reserves the right to determine appropriate equipment, subject to change at any time.

3. Equipment supplied by the City is to be used for business purposes only. The employee must sign an inventory of all the City of Moscow property received and agree to take appropriate action to protect the items from damage or theft. Upon termination of employment, all City property will be returned to the City, unless other arrangements are made.

4. The City of Moscow will supply the employee with appropriate office supplies (pens, paper, etc.) as deemed necessary.

5. The employee will establish an appropriate work environment for work purposes at their home. The City of Moscow will not be responsible for costs associated with the setup of the employee's home office, such as remodeling, furniture or lighting, or repairs or modifications to the home office space.

D. Safety

1. Employees will maintain their home workspace in a safe manner, free from safety hazards. Employees must abide by the City of Moscow Employee Safety Policy. Each employee must agree to maintain their home workspace in keeping with the safety requirements outlined in the Telecommuting Arrangement Request Proposal. Injuries sustained by the employee in a home office location in conjunction with their regular work duties are to be immediately reported to the employee's supervisor and Human Resources. The City has no responsibility or liability for any injuries sustained by visitors to the employee's home worksite.

2. Telecommuting is not a replacement for appropriate child care. Although an individual employee's schedule may be modified to accommodate childcare needs, the focus of the arrangement must remain on job performance and meeting business demands. Prospective employees are encouraged to discuss expectations of telecommuting with family members before entering a trial period.

E. Security

Consistent with the City's expectations of information security for employees working at the office, telecommuting employees are expected to ensure the protection of sensitive information accessible from their home office. Steps include the use of locked file cabinets and desks, regular password maintenance, and any other measures appropriate for the job and the environment.

F. Time Worked

Telecommuting employees who are not exempt from the Fair Labor Standards Act's overtime requirements are required to accurately record all hours worked using the City of Moscow's time-keeping system. Hours worked in excess of those scheduled per day, and per workweek requires the advance approval of the employee's supervisor. Failure to comply with this requirement may result in the immediate termination of the telecommuting agreement.

G. Informal Arrangements

1. An employee's supervisor may approve temporary telecommuting arrangements for circumstances such as inclement weather, special projects, or business travel. These arrangements are approved on an as-needed basis only, with no expectation of ongoing continuance.

2. Other informal, short-term arrangements may be made for employees on family or medical leave to the extent practical for the employee and the City and with the consent of the employee's health care provider, if appropriate.

3. All informal telecommuting arrangements are made on a case-by-case basis, focusing first on the business needs of the City. Informal arrangements that are temporary and short term in nature do not require telecommuting arrangement approval.

VII. Layoff and Recall

The City will, through the exercise of prudent management and budgetary practices, attempt to avoid layoffs and will consider all reasonable alternatives to layoff before any final decisions regarding layoffs are made. If there is to be a reduction of employment because of significant adverse economic or other conditions, layoffs and recall from layoffs will be conducted as consistently as practicable and as set forth below.

A. Layoff

1. In response to a request by the City Supervisor, manager(s) will identify and recommend departmental positions to be considered for layoff (based upon the needs of the departments and of the City as a whole). In the event that layoffs are expected, the City Supervisor will communicate such information to the Mayor, Council, and staff in a timely manner.

2. Communication regarding layoffs may occur in an Executive Session held pursuant to Idaho law. The City Supervisor will recommend a layoff plan to the Council based upon input from City staff and after consultation with the Mayor. The Council will make the final determination of the specific employment positions to be subject to the layoff.

3. In general, City employees are to be considered and selected for layoff in the following order of priority (unless smooth functioning of the City would be unduly compromised):

   a. Temporary and part-time employees should be laid off first (except where such employees are needed to continue important City functions/positions on a "bare-bones" basis).

   b. Next, new employees in their INTRODUCTORY PERIOD should be considered for layoff.

   c. Finally, full-time employees will be identified for layoff based on the positions' contribution and performance, as assessed by their manager and the City Supervisor (in consultation with the Mayor). In order to retain employees considered to be best suited to perform the remaining work, the City Supervisor (in consultation with the

respective managers) may reassign individuals. If contribution and performance are equal between or among employees considered for layoff, length of service should be considered.

4. Employees selected for layoff will be given the notice required by law and as much as is reasonable under the circumstances (as determined by the City Supervisor, in consultation with the Mayor). Employees will be informed of the reason for the layoff and of the estimated length of the layoff by the City Supervisor. Employees selected for layoff cannot use the City's grievance procedure.

5. Previously accrued vacation and compensatory time will be maintained for employees laid off. During the layoff period, no additional leave will accrue. Retirements benefits are maintained by the State of Idaho through the PERSI system.

B. Recall

1. The names of employees who are laid off will be maintained on a recall list for one (1) year or until the Council determines the layoff is permanent, whichever occurs first. Removal from the recall list terminates all recall opportunities the employee may have. While on the recall list, employees should report to Human Resources if they become unavailable for recall. Employees who fail to keep a current home address on record with Human Resources will lose recall opportunities.

2. Employees will be recalled according to the City's need and the employee's classification and ability to do the job. Notice of recall will be sent by certified mail (return receipt requested to Human Resources), to the current home address (as furnished by the employee). Unless an employee responds to the recall notice within seven (7) working days following receipt of the recall notice or its attempted delivery, the employee's name will be removed from the recall list and the employee will cease to have recall opportunities with the City. Neither failure to be recalled nor failure to respond to a recall notice prohibit a former employee from re-applying for employment with the City.

3. Employees laid off for more than thirty (30) days, and who are recalled within one (1) year from the date of layoff, credit for retirement benefits, vacation or sick leave hours, will not be accrued during a layoff of thirty (30) days or more if an employee returns to work following recall.

4. Following recall, the returning employee may use any vacation or days of paid absence that were accumulated but not used when the employee was laid off.

5. Vacation pay equal to the number of days accrued, minus the number of days taken, will be paid to the employee at the time of layoff if the layoff is expected to exceed thirty (30) days.

DRAFT

Chapter 8 – Leave

I. Leaves of Absence

The City may grant employees leaves of absence under certain circumstances. These leave types include unforeseen circumstances, military obligations, bereavement, holidays, vacation, and sick leave. Leaves of absence included below are structured to eliminate the need for any employee to enter into leave without pay status. Leave without pay (LWOP) is a temporary non-pay status and absence from work and is not allowed at the City of Moscow as benefit payments become affected. The following Federal exceptions do apply:

A. The Family and Medical Leave Act of 1993 (FMLA), as amended, provides covered employees with an entitlement to a total of up to twelve (12) weeks of unpaid leave (LWOP) during any twelve (12) month period for certain family and medical needs. (See 5 CFR part 630, subpart L.) The City will comply with the provisions of the FMLA. The City of Moscow FMLA Policy outlines the FMLA's requirements, including the rights and obligations of employees, eligibility and notification requirements, and the City's obligations.

B. The Uniformed Services Employment and Reemployment Rights Act of 1994, as amended, provides employees with an entitlement to LWOP when employment with an employer is interrupted by a period of service in the uniformed service. (See 5 CFR 353.106.)

C. Executive Order 5396, July 17, 1930, provides that disabled veterans are entitled to LWOP for necessary medical treatment.

D. Employees may not be in pay status while receiving workers' compensation payments from the Department of Labor.

II. Leave Approval

A. Leave hours begin accruing on the date of hire and can be used in accordance with the provisions contained herein with supervisory approval. Leave anticipated at hire will be addressed in hiring process.

B. Requests for a routine leave of absence, as outlined in these policies are to be requested or scheduled in advance by the employee in consultation with their supervisor. Unless otherwise noted, all leave approvals must be made by the employee's direct supervisor.

C. Extended leaves of absence or any extension of a previously requested and approved leave should be submitted in writing to the employee's supervisor as soon as is practical before the leave requested. The supervisor will forward the request to the group's Deputy City Supervisor, Human Resources and the City Supervisor for review. These leave types may include:

1. Disability

DRAFT

2. Workers Compensation Related

3. Sick Leave Bank

4. Family Medical Leave Act (FMLA)

D. All employees on approved leave are expected to report any change of status in their need for leave or their intention to return to work to their supervisor, who will keep the group's Deputy City Supervisor, City Supervisor and Human Resources informed.

E. Employees returning from any leave of absence will be reinstated to their same job or an equivalent job with equivalent status and pay, as required by law. If an employee fails to return to work at the conclusion of an approved leave of absence, including any extension of the leave, the employee will be considered to have voluntarily terminated employment.

F. The granting and duration of each leave of absence and the compensation received by the employee, if any, during the leave of absence will be determined by the City in conjunction with applicable federal and state law.

III. Active-Duty Military Leave

A. Active-Duty Military Leave is granted if an employee is absent to serve in the United States' uniformed services for a period of up to five years (not including specific involuntary extensions of service). A leave without pay of absence will be granted to an employee to participate in ordered and authorized field training in accordance with Idaho Code §§ 46-407 and 46-409, and the Uniformed Services Employment and Reemployment Rights Act (USERRA). The City will re-employ returning service members in the job that they would have maintained, if still qualified to perform the duties of the position, or will re-employ the returning service member to a position of like seniority, status and pay, had they not been absent for uniformed service who perform and return from service in the Armed Forces, the Military Reserves, the National Guard, or certain Public Health Service positions. Returning service members will retain certain rights with respect to reinstatement, seniority, layoffs, and compensation.

B. If the employee's military leave is for thirty (30) days or less, the City will continue health benefits as if the employee is actively working. If the employee's military leave is for a period of thirty-one (31) days or more, the City will terminate paid status benefits, but will provide COBRA-like benefits, cost to be paid by the employee, for up to twenty-four (24) months as required by USERRA (subject to change based on USERRA law).

C. Employees returning from a military leave must also comply with all of the reinstatement requirements specified by federal law. If the same job or one of equivalent status and pay is not available due to a reduction in force, the employee will be treated in the same manner as though employee were not on leave at the time of the reduction in force.

IV. Inactive-Duty or Training Military Leave

Any regular full-time or part-time employee serving in the United States uniformed services is entitled to time off at full pay for certain types of inactive duty in the National Guard or as a Reserve of the Armed Forces as provided in this policy. This leave category is provided to cover the hours of leave necessary to cover the period of inactive duty, training, and necessary travel (the equivalent of up to approximately three (3) forty (40) hour workweeks). Employees have three options for managing their military time and pay as follows:

A. During this period of leave, City employees may be paid their regular pay rate, including all benefits to maintain in-service pay status (prorated for regular part-time employees by the number of hours in the employee's regular schedule). In exchange, compensation the employee receives from active or inactive duty is paid over to the City of Moscow up to, but not to exceed, the net pay distributed to the employee.

B. An employee may be eligible for leave without pay, as long as the employee has a combination of hours worked, vacation used, or compensatory time is taken, which equals twenty (20) hours or more in any week. This instance also requires verification from payroll that all employee obligations for payroll deductions and expenses can be met.

C. An employee may take vacation leave to meet inactive-duty or training obligations and may retain both City paid wages as well as military paid wages.

V. Disability Leave

Employees who are unable to work because of a disability may be granted a disability leave of absence. FMLA may be triggered by use of disability leave. FMLA leave covers disabilities caused by pregnancy, childbirth, or other related medical conditions. FMLA also covers injury, alcoholism and/or drug dependence, mental illness, or prolonged physical illness. Sick leave rules also apply to FMLA leave.

VI. Floating Holiday

A. Eight hours of personal time each calendar year may be taken as a paid day off. Floating holidays may not be carried over to the next calendar year.

B. Requests for the use of an employee's Floating Holiday are to be made in writing to the responsible supervisor. Efforts will be made to accommodate the preference of the employee in Floating Holiday scheduling, but first priority will be the orderly functioning of affected departments. Floating Holiday's may not be used until they are earned. Floating Holidays may be taken in eight-hour increments only.

VII. Holidays

A. The City observes certain days each year as holidays. Holidays begin at midnight and end at 11:59 p.m. the following day. The City observes holidays that occur on a Saturday or Sunday on either the preceding Friday or following Monday. Holidays observed by the

City include the following (other holidays may be declared by the Governor, Mayor and City Council):

New Year's Day
(January 1)

Idaho Human Rights Day
(3rd Monday of January)

President's Day
(3rd Monday of February)

Memorial Day
(last Monday of May)

Juneteenth
(June 19)

Independence Day
(July 4)

Labor Day
(1st Monday of September)

Veteran's Day
(November 11)

Thanksgiving Day
(4th Thursday of November)

The day following Thanksgiving
(substitute for Indigenous People's/Columbus Day)

Christmas Day
(December 25)

B. Holidays are paid per employee types as follows:

1. Regular full-time employees are eligible to receive their regular pay rate for each observed holiday.

2. Regular part-time employees who work thirty (30) or more hours per week are eligible to receive holiday pay on a pro-rata basis and only for their regularly scheduled number of hours up to 8 hours.

3. Temporary employees and employees on leaves of absence or on layoff are not eligible to receive holiday pay.

C. To receive holiday pay, an eligible employee must be at work, or on an approved absence, on the workdays both immediately preceding and immediately following the day on which the holiday is observed. An approved absence is a day of paid vacation or other paid leave. If an employee is absent on one or both of these days because of an illness or injury, the City reserves the right to verify the reason for the absence before approving holiday pay.

D. Non-exempt employees who work on a City-designated holiday may choose compensatory time off or pay at the rate of one and one-half times the amount of time worked.

VIII. Moscow Volunteer Fire Department Leave

City of Moscow employees are, at the discretion of their supervisor, granted time off with pay during regular work hours while serving as a volunteer with the Moscow Volunteer Fire Department for active call outs. Employees must be in good standing with their supervisor and department. Overtime is not permitted to accommodate for volunteer hours provided during regular work hours.

IX. Paid Parental Leave

A. This leave is separate and in addition to other leave policies. Eligible employees are able to receive up to four weeks (160 hours) of paid parental leave to be used within the first six (6) months of the birth, adoption, or regular full-time custody of a child not previously under an employee's care, paid on the employee's regular payroll dates.

B. Paid Parental Leave is intended to provide employees the time and financial support to adjust to the addition of a new family member following the birth, adoption, or placement of a child for activities related to the physical and mental wellbeing and care of the child and parents or caregiver.

C. If both parents are City employees that meet the eligibility criteria, each parent is eligible to receive the four-week paid parental leave benefit. An eligible parent is defined as a biological parent, same-sex spousal equivalent, domestic partner, new adoptive parent, or caregiver assuming significant parental and financial responsibility for a child. An individual who adopts a spouse or partner's child(ren) is not eligible for this benefit.

D. Eligibility

1. City employees regularly working thirty (30) or more hours per week who have been employed for the previous twelve (12) consecutive months and have worked for at least one thousand two hundred fifty (1,250) hours during the prior twelve (12) month period are eligible for Paid Parental Leave. Eligibility requirements must be met as of the last day worked prior to the start of the paid leave.

2. Part-time employees who work an average of thirty (30) hours per week will receive Paid Parental Leave on a prorated basis to be calculated by dividing the average hours worked per work period over the prior twelve months by 40 (i.e. if an employee averaged 35 hours per work period over the prior year, they would receive 140 hours of parental leave ((35/40)*160=140).

3. Temporary employees are ineligible for Paid Parental Leave. This benefit is not available to employees who do not intend to remain in the City's employ or employees who are in unpaid status. The amount of leave permitted with this benefit will be deducted from the employee's FMLA entitlement.

X. Bereavement

A. Up to three (3) days of paid bereavement leave is available in the event of the death of an employee's immediate family member or a person living in the same household. Bereavement leave may be extended for an additional five (5) working days by deduction from the employee's sick leave accrual. The compensable days must fall within the regularly scheduled workweek and must be approved in advance by the employee's supervisor and department manager.

B. For the purpose of this policy, the definitions that apply to this section are as follows:

1. Child – A biological, adopted, or foster child, a stepchild, a legal ward, or a child of a person standing "in loco parentis" by providing day-to-day care and/or financial support. For FMLA leave for adoption, foster care or a family member with a severe health condition, the child must either be under age eighteen (18), or age eighteen (18) or older and incapable of self-care because of mental or physical disability as defined by the ADA. For FMLA leave due to birth and care of a newborn child, the child must be under twelve (12) months of age.

2. Domestic Partner – As defined in Resolution 2007-31; Each are eighteen (18) years of age or older; share a close personal relationship and are each other's sole domestic partner; are responsible for each other's common welfare; are not legally married to anyone else nor has either had a domestic partner within thirty (30) days immediately prior to completing the application for enrollment to qualify as domestic partners; are not related by blood closer than would bar marriage in Idaho; share the same regular, and permanent residence and each intends to continue to do so indefinitely; jointly share financial responsibility for basic living expenses, including, but not limited to, the cost of food, shelter, and other costs such as medical expenses.

3. Household – The spouse and dependent children of the elected official or employee and/or persons whom the elected official or employee is legally obligated to support (I.C. § 74-403(7)). Reside in the same home and are responsible for each other's common welfare, share the same regular and permanent residence, and each intends to continue to do so indefinitely; jointly share financial responsibility for basic living expenses, including, but not limited to, the cost of food, shelter, and other costs such as medical expenses.

4. Immediate Family Member – A spouse, brother, sister, parents, children, stepchildren, father-in-law, mother-in-law, sister-in-law, brother-in-law, daughter-in-law, son-in-law, and any other member of the employee's household.

5. Parent – A biological, adoptive, step or foster parent, or another person who stood "in loco parentis" to the eligible employee when the employee was a child by providing day-to-day care and financial support. The term does not include parent-in-law.

6. Relative - Related to Elected official/employee by blood or marriage within the second degree (I.C. 18-1361A). A relative of the second degree includes an aunt, uncle, grandparent, grandchild, niece, nephew, and first cousin.

7. Spouse - A husband or wife as defined or recognized under State law for purposes of marriage in the State where the employee resides.

DRAFT

XI. Jury Duty

A paid leave of absence will be granted to employees who serve on jury duty. Employees will be paid their regular pay rate, including all benefits in order to maintain in-service pay status. In exchange, the employee's compensation from jury duty is paid over to the City of Moscow up to, but not to exceed, the net pay distributed to the employee. An employee whose public service duty is completed before the midpoint of their typical working day is expected to return to their work location at the City. As an alternative, employees may take vacation leave to meet jury duty or witness obligations and may retain both City paid wages as well as court compensation.

XII. Vacation

A. Full-time, regular employees are eligible to accrue vacation leave based on length of service. The City Supervisor may determine the vacation accrual rates for new employees. Part-time employees who work an average of thirty (30) hours per week accrue vacation hours on a prorated basis. Temporary employees are ineligible for vacation accrual.

B. Full-time, regular employees accrue vacation at the following rates, exempt employees may qualify for a different accrual schedule:

	Non-Exempt Employees	FLSA Exempt Employees
Year 1 through 4	8 hrs/month (3.69/pay period)	12 hrs/month (5.54/pay period)
Year 5 through 8	10 hrs/month (4.62/pay period)	14 hrs/month (6.46/pay period)
Year 9 through 12	12 hrs/month (5.54/pay period)	16 hrs/month (7.38/pay period)
Year 13 through 16	14 hrs/month (6.46/pay period)	18 hrs/month (8.31/pay period)
Year 17 through 20	16 hrs/month (7.38/pay period)	18 hrs/month (8.31/pay period)
Year 21 +	18 hrs/month (8.31/pay period)	18 hrs/month (8.31/pay period)

C. The maximum accumulation at the end of the calendar year is two hundred forty (240) hours. An employee may request an additional forty (40) hours to be rolled over at the end of the year. All requests are subject to approval by employee's supervisor and the City Supervisor and may only be approved where it is determined that work demands, staffing levels or other conditions prohibited the employee from reasonably utilizing their vacation time accrual.

D. Requests for vacation leave are to be made in writing to the responsible supervisor. Efforts will be made to accommodate the employee's preference in vacation scheduling, but the first priority will be the orderly functioning of the affected departments. Vacation leave may not be used until it is earned or in any amount greater than the number of vacation leave hours accrued.

E. If a paid holiday falls within an employee's vacation period, time for the holiday will not be charged to the employee's vacation credit. If an employee qualifies for sick leave during their vacation period, such time will not be charged to the employee's vacation credit.

DRAFT

F. Upon termination of employment, employees shall be paid for all unused vacation accrued. Employees who leave in good standing may be eligible by approval of the City Supervisor to take vacation to extend their in-pay status beyond their final day in office. The extension of in-pay status does not provide for the accrual of sick leave or vacation hours. The employee would be responsible for the employer's contribution for the employee's continued medical benefits.

DRAFT

XIII. Sick Leave

A. The City recognizes that there are times when employees themselves or their dependents have health problems that require time away from work. Sick leave is provided for the following circumstances.
   1. Personal illness or injury including work-related injuries, pregnancy and birth of a child, etc.;
   2. Care for children, spouse or other members of immediate family when they have a health condition that requires supervision/ treatment;
   3. Medical, dental or optical appointments for self or dependents, if arranged in advance with the appropriate supervisor;
   4. Extended Bereavement Leave.

B. Regular, full-time employees accrue three point six-nine (3.69) hours of sick leave per pay period of continuous service. Regular part-time employees who work an average of thirty (30) hours per week accrue sick leave hours on a prorated basis. Sick leave accrues only when an employee's status is active, i.e., working or taking paid time off. The maximum accumulation of sick leave is nine hundred sixty (960) hours. Once maximum accumulation is reached, no additional hours are accumulated until the employee's balance falls below nine hundred sixty (960) hours.

C. In the event sick leave is needed, the appropriate supervisor must be notified initially; daily contact must be made after that unless otherwise arranged. A signed physician's release may be required for leaves of absences of three (3) days or more, or at the discretion of the supervisor depending on the reoccurring nature of sick leave requests.

D. A supervisor may request a signed physician's release at any time when an employee is suspected of abusing sick leave. Absences that are designated as FMLA absences must be converted to a leave of absence if employment rights are to be maintained under the FMLA. Employees returning from sick leave may be asked to provide certification of their ability to perform their job's essential functions.

E. Sick leave may not be used until it is earned or in any amount greater than the number of sick leave hours accrued. Any misuse of sick leave will be considered cause for discipline, which may include termination of employment.

F. In the event that an employee is unable to work due to a work-related injury and is collecting compensation payments appropriately through the State Insurance Fund (SIF) with an open worker's compensation claim, the employee may submit the SIF compensation payment to the City in exchange for additional sick leave hours in the amount commensurate with the compensation payments received.

G. When an employee leaves City employment in good standing 15% of the value of sick leave hours accumulated will be contributed to the employee's VEBA account. Sick leave payout is forfeited when an employee leaves City employment due to termination.

DRAFT

XIV. Sick Leave Bank

A. The purpose of the Sick Leave Bank is to provide a means of obtaining additional sick leave days to avoid loss of compensation and to remain in pay status due to a significant or catastrophic illness or injury. Catastrophic injury or illness is defined as a life-threatening condition or combination of conditions affecting the mental or physical health of the employee. The catastrophic illness or injury must require the services of a health provider. The sick leave bank is available to eligible, voluntarily participating employees who have legitimately exhausted all of their accumulated sick and vacation leave. The sick leave bank will not be made available in cases of suspected sick leave abuse.

B. Human Resources shall be responsible for managing and administering the Sick Leave Bank to include the procedural establishment, solicitation of contributions, processing of applications, and records management.

C. All regular full-time City of Moscow employees who have a sick leave balance of forty (40) or more hours at the time of the initial contribution of eight (8) hours of sick leave shall be eligible to participate in the Sick Leave Bank. Initial contributions are deducted from the sick leave days available to the contributing employee. Once hours are contributed to the Sick Leave Bank, they may not be reclaimed by the employee. Only employees who are active members of the Sick Leave Bank shall be eligible to draw on the Sick Leave Bank.

D. Newly hired employees shall be eligible to participate in the Sick Leave Bank the month following the successful completion of their introductory period and after their initial contribution has been made. Once employees elect to participate in the Sick Leave Bank, membership is established for the duration of their employment with the City of Moscow.

E. A participant granted leave of absence shall retain their status upon returning to regular duties.

F. Criteria for Sick Leave Bank usage is as follows:

   1. Catastrophic accident by the employee requiring absences from work.

   2. Catastrophic illness of the employee.

   3. Extended hospitalization of the employee.

G. Appropriateness of previously used employee earned sick leave will be considered. No requestor may borrow more than twenty (20) days of sick leave at any one time. Requests are limited to two (2) per incident.

H. An employee may apply for Sick Leave Bank hours only after exhausting all accumulated paid leave time. This time includes all earned vacation, sick leave, floating holiday and

compensatory time. The employee must apply for approval as outlined in the application and approval process. Once approved, the employee may draw on sick leave hours granted.

I. To be considered for Sick Leave Bank hours, an application, signed by the employee's supervisor(s), must be submitted to Human Resources for approval by the City Supervisor. Applications for Sick Leave Bank assistance must be in writing and accompanied with appropriate documentation outlined in the application. Progress reports may be required as a condition of receiving sick leave hours from the Sick Leave Bank.

J. If the City of Moscow discontinues the Sick Leave Bank - employees who are members in good standing will be credited 8 hours of sick leave to their accounts.

XV. Workers Compensation

The City holds a Workers Compensation Policy under the Idaho State Insurance Fund. This policy covers all employees regardless of employee classification.

A. Employee Reporting

All employees are required to report any accident or incident resulting in an injury or illness, even if an employee only received first-aid treatment, to their supervisor immediately. In addition, a First Report of Injury form (FROI) must be completed for all injuries whether or not medical treatment was sought. The FROI is used to provide the needed information to the Idaho State Insurance Fund should a claim need to be filed and provides information to determine how, where, and when the accident occurred, any direct or underlying causes including unsafe behaviors and conditions and corrective actions to be taken.

B. Medical Treatment

1. In the event that an employee is injured while at work the supervisor will evaluate and ask the injured employee whether they would like to seek medical treatment.

2. In emergency situations and if the employee appears to be in a condition where they should not be moved, call 911 immediately.

3. In the event that the employee injury requires treatment outside of regular work hours:

   a. Emergency Situation – The employee shall seek treatment with the Emergency Room, if applicable.

      i. Contact the supervisor to report the treatment

      ii. If unable to contact the supervisor, email or call and leave a message with Human Resources and then follow up with the supervisor the next work day

b. If the injured employee chooses to not to seek medical care, an Accident Investigation Report will be completed.

XVI. Compensation

1. Employees with an active Workers Compensation case stemming from an on the job injury that does not allow them to work are to use sick leave hours for any time away from work related to the injury.

2. Should the Idaho State Insurance Fund provide compensation dollars for time off work employees may:

   a. Keep the SIF compensation payments and continue to use sick leave. Of note – if the employee runs out of sick leave to use while unable to work, they employee will be responsible for all benefit premium payments while not in pay status.

   b. Remit the SIF compensation payment to the City for conversion to sick leave hours. Of note - this method provides additional sick leave hours to be used to keep employee in pay status.

3. An employee who depletes their sick leave due and is not receiving or has yet to receive SIF compensation dollars for time off work is eligible for sick leave bank hours and will not be required to use other leave types for that medically necessary time off due to the original work-related injury.

XVII. Family and Medical Leave Act (FMLA)

The Family and Medical Leave Act (FMLA) entitles eligible employees of covered employers to take unpaid, job-protected leave for specified family and medical reasons. The FMLA applies to the City of Moscow, a government entity. The following provides general information about, when employees are eligible and entitled to take FMLA leave, and what rules apply when employees take FMLA leave. Where there are differences in the requirements under the Family Medical Leave Act and this policy, the Act takes precedence.

A. Eligible Employees

1. Only eligible employees are entitled to take FMLA leave. An eligible employee is one who:

   a. Works for a covered employer;

   b. Has worked for the employer for at least 12 months;

   c. Has at least 1,250 hours of service for the employer during the 12-month period immediately preceding the leave; and

d. Works at a location where the employer has at least fifty (50) employees within seventy-five (75) miles.

2. The twelve (12) months of employment do not have to be consecutive. That means any time previously worked for the same employer (including seasonal work) could, in most cases, be used to meet the 12-month requirement. If the employee has a break in service that lasted seven (7) years or more, the time worked prior to the break will not count unless the break is due to service covered by the Uniformed Services Employment and Reemployment Rights Act (USERRA), or there is a written agreement, including a collective bargaining agreement, outlining the employer's intention to rehire the employee after the break in service. See "FMLA Special Rules for Returning Reservists".

B. Leave Entitlement

1. Eligible employees may take up to twelve (12) workweeks of leave in a 12-month period for one or more of the following reasons:

   a. The birth of a child or placement of a child with the employee for adoption or foster care;

   b. To care for a spouse, child, or parent who has a serious health condition;

   c. For a serious health condition that makes the employee unable to perform the essential functions of their job; or

   d. For any qualifying exigency arising out of the fact that a spouse, son, daughter, or parent is a covered military member on covered active duty or call to covered active duty status.

2. An eligible employee may also take up to twenty-six (26) workweeks of leave during a "single 12-month period" to care for a covered servicemember with a serious injury or illness, when the employee is the spouse, son, daughter, parent, or next of kin of the servicemember. The "single 12-month period" for military caregiver leave is different from the 12-month period used for other FMLA leave reasons. See U.S. Department of Labor Fact Sheets 28F: Qualifying Reasons under the FMLA and 28M: The Military Family Leave Provisions under the FMLA.

3. Under some circumstances, employees may take FMLA leave on an intermittent or reduced schedule basis. That means an employee may take leave in separate blocks of time or by reducing the time employee works each day or week for a single qualifying reason. When leave is needed for planned medical treatment, the employee must make a reasonable effort to schedule treatment so as not to unduly disrupt the employer's operations. If FMLA leave is for the birth, adoption, or foster placement of a child, use of intermittent or reduced schedule leave requires the employer's approval.

4. Under certain conditions, employees may choose, or employers may require employees, to "substitute" (run concurrently) accrued paid leave, such as sick or vacation leave, to cover some or all of the FMLA leave period. An employee's ability to substitute accrued paid leave is determined by the terms and conditions of the employer's normal leave policy.

C. Notice

1. Employees must comply with their employer's usual and customary requirements for requesting leave and provide enough information for their employer to reasonably determine whether the FMLA may apply to the leave request. Employees generally must request leave 30 days in advance when the need for leave is foreseeable. If 30 days advance notice is not possible because the situation has changed or the employee does not know exactly when leave will be required, employees must provide notice as soon as possible and practicable under the circumstances.

2. When an employee seeks leave for a FMLA-qualifying reason for the first time, the employee need not expressly assert FMLA rights or even mention the FMLA. If an employee later requests additional leave for the same qualifying condition, the employee must specifically reference either the qualifying reason for leave or the need for FMLA leave. See U.S. Department of Labor Fact Sheet 28E: Employee Notice Requirements under the FMLA.

3. Covered employers must:

   a. Post a notice explaining rights and responsibilities under the FMLA;

   b. Include information about the FMLA in their employee handbooks or provide information to new employees upon hire;

   c. When an employee requests FMLA leave or the employer acquires knowledge that leave may be for a FMLA-qualifying reason, provide the employee with notice concerning their eligibility for FMLA leave and employees rights and responsibilities under the FMLA; and

   d. Notify employees whether leave is designated as FMLA leave and the amount of leave that will be deducted from the employee's FMLA entitlement.

4. See U.S. Department of Labor Fact Sheet 28D: Employer Notice Requirements under the FMLA.

D. Certification

When an employee requests FMLA leave due to their own serious health condition or a covered family member's serious health condition, the employer may require certification in support of the leave from a health care provider. An employer may also require second

or third medical opinions (at the employer's expense) and periodic recertification of a serious health condition. See U.S. Department of Labor Fact Sheet 28G: Certification of a Serious Health Condition under the FMLA. For information on certification requirements for military family leave, See U.S. Department of Labor Fact Sheet 28M(c): Qualifying Exigency Leave under the FMLA; Fact Sheet 28M(a): Military Caregiver Leave for a Current Servicemember under the FMLA; and Fact Sheet 28M(b): Military Caregiver Leave for a Veteran under the FMLA.

E. Job Restoration and Health Benefits

Upon return from FMLA leave, an employee must be restored to their original job or to an equivalent job with equivalent pay, benefits, and other terms and conditions of employment. An employee's use of FMLA leave cannot be counted against the employee under a "no-fault" attendance policy. Employers are also required to continue group health insurance coverage for an employee on FMLA leave under the same terms and conditions as if the employee had not taken leave. See U.S. Department of Labor Fact Sheet 28A: Employee Protections under the Family and Medical Leave Act.

F. Other Provisions

Salaried executive, administrative, and professional employees of covered employers who meet the Fair Labor Standards Act (FLSA) criteria for exemption from minimum wage and overtime under the FLSA regulations, 29 CFR Part 541, do not lose their FLSA-exempt status by using any unpaid FMLA leave. This special exception to the "salary basis" requirements for FLSA's exemption extends only to an eligible employee's use of FMLA leave.

G. Enforcement

It is unlawful for any employer to interfere with, restrain, or deny the exercise of or the attempt to exercise any right provided by the FMLA. It is also unlawful for an employer to discharge or discriminate against any individual for opposing any practice, or because of involvement in any proceeding, related to the FMLA. See U.S. Department of Labor Fact Sheet 77B: Protections for Individuals under the FMLA. The Wage and Hour Division is responsible for administering and enforcing the FMLA for most employees. If you believe that your rights under the FMLA have been violated, you may file a complaint with the Wage and Hour Division or file a private lawsuit against your employer in court.

For additional information, visit the Wage and Hour Division Website: http://www.wagehour.dol.gov and /or call the toll-free information and helpline, available 8 a.m. to 5 p.m. in your time zone, 1-866-4-USWAGE (1-866-487-9243).

XVIII. Fit for Duty

A. Applicants to whom a conditional offer of employment has been extended and current employees may be required to undergo medical tests, procedures, or examinations

whenever there is a question of the employees' ability to perform their job responsibilities in a safe, secure, productive, and effective manner.

B. Successful applicants for employment may be required as a condition of employment to pass a medical examination to establish their fitness to perform the jobs for which they have applied without endangering the health and safety of themselves or others. If the manager determines that an examination is appropriate to a particular position, all applicants for the job to whom a conditional offer of employment has been made are to be examined.

C. Employees may be required to have a medical examination on other occasions when the examination is job-related and consistent with business necessity. For example, a medical examination may be required when an employee is exposed to toxic or unhealthy conditions, requests an accommodation for a disability, or has a questionable ability to perform their duties on the job for which they are being considered.

D. Medical examinations required by the City will be paid for at City expense and must be performed by a physician or licensed medical facility designated or approved by the City. Medical examinations paid for by the City are the property of the City, and the examination records are to be treated as confidential and held in separate medical files.

E. However, records of specific examinations, and if required by law or regulation, will be made available to the employee, persons designated and authorized by the employee, public agencies, relevant insurance companies, and/or the employee's doctor.

F. Employees who need to use prescribed drugs or narcotics while at work must report this necessity to their supervisor if the use of such prescribed drugs might reasonably be expected to impair their ability to perform the job safely and effectively. Depending on the circumstances, employees may be reassigned, forbidden to perform certain tasks, or even prohibited from working if they are judged by their supervisor unable to perform their job safely and properly while taking prescribed drugs.

G. The City reserves the right to require acceptable confirmation of the nature and extent of any illness that requires an employee to be absent from scheduled work. Employees returning from a disability leave of absence caused by health problems may be required to provide a doctor's certification of their ability to perform their regular work satisfactorily without endangering themselves, the public or their fellow employees. The City reserves the right to require a second and, if necessary, third medical opinion regarding an employee's absence because of illness or injury. Any required second or third opinions will be paid for by the City.

H. Employees who become ill on the job or suffer any injury, either of which is related to work, no matter how minor, must report to their supervisors, who will arrange referral for examination and treatment, as circumstances require and who will record the incident. Time spent by an employee in obtaining this medical attention will be considered hours worked for pay purposes. The cost of medical treatment sought will initially be covered by

the employee's insurance and may later be reimbursed to the employee pending worker's compensation claim (if appropriate) or by the City at request of the employee.

I. An injured employee's supervisor, manager, or medical personnel are authorized to direct the employee to be transported to a medical facility for treatment. Human Resources is responsible for developing and directing programs concerning employee health and safety.

XIX. Return to Work – Light Duty

The City may allow employees who have been seriously injured or who are seriously ill and cannot return to full duty due to physical limitations to return to a temporary light duty assignment at the City's discretion. Upon release to full duty, employees are not eligible for a temporary light duty assignment.

A. The City may allow an employee to return to a temporary light duty assignment for a period of time not to exceed thirty (30) calendar days following the first day of the temporary light duty assignment. At the end of the thirty (30) day period the temporary light duty assignment will end. The employee may request and the City may allow a new temporary light duty assignment not to exceed thirty (30) calendar days. Any additional temporary light duty assignment will not necessarily involve the same tasks and duties as a prior temporary light duty assignment.

B. To consider a request for a temporary light duty assignment, there must be a legitimate temporary light duty assignment available in the employee's department or in another department within the City. Temporary light duty assignments will be coordinated by the supervisor and Human Resources.

C. The affected employee must be qualified to perform the essential functions of the temporary light duty assignment.

D. The employee's health care provider must release the employee with all restrictions noted to perform the temporary light duty assignment.

E. In cases where a temporary light duty assignment is not available, the employee may remain on Workers Compensation if the injury or illness was classified as an on-the-job accident or illness and has been processed through the City's Worker's Compensation insurance. During such time the employee may also use accrued leave or request a medical leave of absence. Leave(s) must be coordinated through Human Resources.

F. When a temporary light duty assignment is not available and the employee has not been released to full duty due to physical limitations, and the employee has exhausted all paid or unpaid leave, the employee's employment with the City may be terminated.

DRAFT

Chapter 9 - Records

I. Payroll and Time Records

A. Employees are paid every two weeks throughout the year. All paychecks are distributed by direct deposit with paystubs issued on every payday. Paychecks compensate employees for work performed in the pay period preceding the week in which the check is issued.

B. Each non-exempt employee is responsible to accurately record time that they have worked following the procedures established by the Finance Department - Payroll Office. Each report of non-exempt employees must be signed manually or electronically by both the Supervisor and the employee. It must contain a certification that it is a true and correct record of the employee's actual time worked and benefits used for the time period covered. Any changes to the time record made by a Supervisor or the Payroll Office to correct mistakes must be acknowledged by the employee. Exempt employees may be required to document time worked or benefits used for accountability purposes.

C. Employees may not falsify their timesheet or alter another employee's timesheet in any way. Employees must not under or over report hours worked by themselves or other employees, or conceal any falsification of time records, even if instructed to do so by a supervisor, manager, an Elected Official, or another person. If instructed to do so, the employee must immediately report it to the City Attorney.

D. Every effort will be made to ensure that employees are paid correctly. Occasionally, however, inadvertent mistakes occur. Each employee must monitor the accuracy of compensation received and review their paper or electronic paycheck stub when received to make sure it is correct. The information shown on the employee's paycheck stub is provided for information only. Actual practices regarding the issuance of paychecks and allocation of employee benefits must be consistent with the City's official policy. In the event of disagreement between the computer-generated paycheck stub and official policy, as interpreted by the City Council, the policy will prevail. Employees are obligated to call the City's attention by notifying payroll to any such errors, whether to the employee's advantage or disadvantage. When mistakes are made and are called to the City's attention, the City will correct the error as soon as possible.

II. Personnel Files

A. Personnel Records

1. The official employee records for the City will be kept in the Human Resource Office.

2. The personnel files should contain records related to employee performance, employee status, and other relevant materials related to the employee's service with the City.

3. The employee’s supervisors and the employee them self may contribute materials to the personnel files deemed relevant to the employee's performance.

DRAFT

B. Access to Personnel Files

1. Only the employee's supervisors, attorneys for the City, Human Resources staff, and the employee are authorized to view materials in a personnel file. Access of others to such files will be allowed only when authorized after consultation with legal counsel for the City or upon receiving written consent by the employee.

2. Information regarding personnel matters will only be provided to outside parties with a release from the employee, when deemed necessary by legal counsel for the City, or pursuant to a Court order or a proper subpoena.

3. The City reserves the right to disclose the contents of personnel files to outside state or federal agencies, its insurance carrier or its carrier's agents for risk management purposes, or when necessary to defend itself against allegations of unlawful conduct.

4. Copies of materials in an employee's personnel file are available to that employee without charge, subject to exceptions provided by statutes.

C. Employee Responsibility

1. Employees have a responsibility to make sure their personnel records are up to date and should notify Human Resources in writing as soon as possible of any changes in at least the following areas:

   a. Name

   b. Current address

   c. Social Security Number or other tax identification number

   d. Marital status

   e. Number of withholding allowances (dependents)

2. This information is required for the City to properly process and report W4 and W2 information as required by the Internal Revenue Service.

III. Management of Information In Personnel Files

Each employee may contest the contents of their personnel file at any time, by filing a written objection and explanation that will be included in the file along with the objectionable material. It is the sole judgment of the City Supervisor or designee, after consultation with Human Resources and City Attorney, to determine if any material may be removed from a personnel file. In general, there is a presumption that materials are to remain in personnel files accompanied by the employee's written objection and explanation

DRAFT

to provide a complete employment history. Any such approved removal of information will be documented in writing and maintained in the employee's personnel file.

DRAFT

Chapter 10 - Operational Policies

I. Conflicts of Interest

The City prohibits its employees from engaging in any activity, practice, or conduct which conflicts with, or appears to conflict with, the interests of the City. Since it is impossible to describe all of the situations which may cause or give the appearance of a conflict of interest, the prohibitions which may cause or give the appearance of a conflict of interest, include but are not limited to the following examples.

A. Employees are expected to represent the City in a positive and ethical manner and have an obligation both to avoid conflicts of interest and to refer questions and concerns about potential conflicts to their supervisor or manager.

B. Employees are not to engage in, directly or indirectly either on or off the job, any conduct which is disloyal, disruptive, or damaging to the City.

C. Employees and their immediate family are not to accept gifts, (except those of nominal value), or any special discounts or loans from any person or firm doing, or seeking to do, business with the City.

D. Employees are not to give, offer, or promise, directly or indirectly, anything of value to any representative of a customer, of a potential customer, or of a financial institution in connection with any transaction or business that the City may have with that customer, potential customer, or financial institution.

E. While actively employed, employees shall not:

1. Hold any City of Moscow elective office. (Employees may run for any City of Moscow elective office; but, must resign their City position if elected and prior to being sworn into such elective office.)

2. Engage in any campaigning or circulating political petitions while on the job;

3. Use any City funds, resources, time supplies or equipment for political purposes;

4. Participate in any political activity while wearing any uniform or part of any uniform associating them with their City employment.

II. Outside Employment

A. The City may allow its employees to engage in outside work or hold other jobs, subject to certain restrictions as outlined below.

B. The City requires that employee's activities and conduct away from the job must not conflict with or compromise the City's interests, or adversely affect job performance and

the ability to fulfill the employee's responsibilities to the City. This requirement, for example, prohibits employees from performing any services for customers on non-working time that are normally performed by City personnel. This prohibition also extends to the unauthorized use of any City tools or equipment. In addition, employees are not to solicit or conduct any outside business during paid working time.

C. Full-time employees are not encouraged to engage in outside employment or other work activity, but may be permitted to do so if granted permission. Employees are cautioned to consider carefully the demands that additional work activity will create before requesting permission to seek or accept outside employment. Outside employment will not be considered an excuse for poor job performance, absenteeism, tardiness, leaving early, refusal to travel, or refusal to work overtime or different hours. If outside work activity does cause or contribute to job-related problems, it must be discontinued; and, if necessary, normal disciplinary procedures will be followed to respond to the specific problems.

D. All employees, including part-time employees, must obtain prior approval from their manager before any outside employment or other work activity is undertaken. Failure to do this may result in disciplinary action. To request approval, complete the Outside Employment Form, available from Human Resources.

E. The request should state any pertinent information about the outside employer, the nature of the job, and the hours of employment. The manager should then either approve or disapprove the request and forward to Human Resources for inclusion in the employee's personnel file.

F. This form must be reviewed and approved by the employee's supervisor, deputy city supervisor, and Human Resources. Decisions of approval or disapproval, at all levels, are final.

G. The following factors are examples of when an Outside work requests may not be approved:

   1. May reduce the employee's efficiency in working for the City.

   2. Involve working for an organization that does business with the City, such as contractors and suppliers.

   3. May create a potential for CONFLICT OF INTEREST.

H. Employees who have accepted outside employment are not eligible for paid sick leave if the absence is used to work on the outside job or is the result of an injury sustained on the outside job. Fraudulent use of sick leave or personal absences will result in disciplinary action.

I. Any employee who is injured or becomes ill while working on any outside job must report the injury or illness to their supervisor.

DRAFT

III. Business Travel

Business travel must be approved in advance and should be engaged in and reimbursed according to the guidelines below.

A. Employees holding jobs that require some travel are expected to travel as a condition of employment. For all other jobs, travel is considered only an incidental function of the position, but may be required.

B. Supervisors must approve any employee travel in advance.

C. The City may issue guidelines specifying or restricting travel booking requirements. Under normal circumstances, employees should use the most expedient mode of transportation available, book the least expensive fares, and stay in and eat at moderately priced establishments.

D. Employees should provide their supervisor with a copy of their itinerary before leaving on business travel.

E. Employee expenses for approved travel will be paid or reimbursed when properly documented by the employee and approved by the supervisor. Employees who know or anticipate that they will have a special request for travel expense reimbursement should seek approval for the expense from their supervisor before the expense is incurred. Any travel expenses deemed unreasonable relative to the circumstances will not be paid or reimbursed and are the employee's personal responsibility.

F. Employees may obtain a cash advance for travel expenses in accordance with the adopted per diem schedule by submitting a written request to their supervisor. When city employees receive an advance for per diem, they are not required to keep receipts of their use of the per diem.

G. Meal expense amounts paid by credit card shall comply with the approved per diem rate of the travel location.

H. Time spent by non-exempt employees in traveling away from home on City business during normal working hours is considered hours worked for pay purposes.

I. Employees traveling on City business are representatives of the City and are expected to maintain a high level of professionalism and follow all of the City's policies and rules.

IV. Use of Communication Systems

Communications systems necessary to promote the efficient conduct of its business will be provided.

A. The City Communications System includes but is not limited to the following: mail; electronic mail; courier services; facsimiles; computers; computer networks; on-line services; computer files; intercom systems; video equipment; recording devices and recordings; pagers; two-way radio equipment; phones; and cellular phones.

B. Supervisors are responsible for instructing employees on the proper use of The City Communications Systems used by the organization for both internal and external business communications.

C. No employee shall have any expectation of privacy in any message, file, image, or other form of data created, sent, received, accessed, or in the City's Custody or control, by use of the City's Communication System, which includes GPS data. All City equipment used for communication, including the messages transmitted or stored, and the location of where the messages are transmitted, are the sole property of the City. Supervisors and/or managers may access and monitor employee use of the City Communication Systems and files, as considered appropriate. Some City issued systems and devices have the ability to include GPS tracking data. The employee has no expectation of privacy as it relates to the GPS data stored on any City issued system or device when such device is used for work or personal reasons.

D. Authorized personal use of the City Communication System includes uses made by City employees where such use:

1. Does not adversely affect the performance of the City Communication Systems;

2. Creates no significant additional cost to the City, however, personal long-distance calls and personal use of City-issued cellular phones are prohibited;

3. Is of reasonable duration and frequency, and whenever possible, made during employee's personal time (such as breaks or the time before and after a shift);

4. Has little impact on the employee's or other employees' productivity or ability to perform their assigned duties.

E. While at work, employees are to exercise discretion in using City Communication Systems or personal devices such as cellular phones. Excessive personal use of any communication systems or personal devices during the work day interferes with employee's productivity and can be distracting to others; therefore, excessive personal use (regardless of the system used) during an employee's workday is prohibited.

F. Users of the City Communication Systems shall obey all pertinent federal, state, county, and local laws and ordinances.

G. While at work, public safety employees (police and fire) are expected to operate vehicles and other equipment in a safe manner and shall not utilize any device in a manner that interferes with the safe operation of the vehicle/equipment. Public safety employees shall

not operate any non-City issued Communication System devices while operating a vehicle/equipment.

H. While at work, non-public safety employees shall not operate any device while driving a motor vehicle or operating equipment. Non-public safety employees who receive a cell phone call or text message while driving a motor vehicle or operating equipment are required to stop the vehicle/equipment in a safe location so that communication occurs while the vehicle/equipment is stopped. The use of hands-free technology and the use of vehicle installed two-way radio equipment is acceptable as long as it does not interfere with the safe operation of the vehicle/equipment. This section shall not apply to employees who are passengers in a motor vehicle.

I. Improper use of City Communication Systems equipment will result in discipline, up to and including termination. Improper use for the purposes of this policy includes, but is not limited to: playing computer games, sending any harassing, offensive, demeaning, insulting, intimidating, or sexually suggestive written, recorded, or electronically transmitted messages, materials, or data.

V. Vehicle Use

This Policy applies to all employees and City volunteers (those that volunteer on a regular basis, not one-time volunteers) who operate vehicles on City business. Activities of these employee drivers will be reviewed by supervisors to ensure full implementation and compliance of this Policy.

A. Employees operating City-owned or leased motor vehicles shall always drive safely, legally and courteously, remembering that they are directly responsible for maintaining both City-owned property and the public trust.

B. Employees are expected to operate vehicles safely. It is the policy of the City to provide a safe working environment that protects City employees and citizens from injury and property loss. The City considers the use of vehicles part of the working environment and is committed to safe responsible employee driving behavior that reduces the risk of personal injury and property loss.

C. Some City vehicles may be equipped with GPS capabilities where at any given time the vehicle may transmit and the City may utilize the GPS information to identify where the vehicle is located or historical information as to where the vehicle has been. Employee has no expectation of privacy as it relates to the use of the City vehicle and as it relates to the electronic information the vehicle may store or transmit. The City has the discretion to utilize this information for any use it determines appropriate.

D. Authorized Use

1. Employees must be authorized by their supervisor to operate a City vehicle.

2. Vehicles owned or leased by the City are to be used for the approved functions of the City. Personal use, use by a person not employed by the City, or any other type of use must be authorized.

3. The City Street/Vehicle Maintenance Manager is entrusted with the care and keeping of the vehicles and may assign that responsibility to an employee.

4. Some employees may be assigned the use of a City vehicle that is driven home. Such personal use, if allowed, may be a taxable benefit.

5. Vehicles over 26,000 gross vehicle weight, buses, and vans over fifteen (15) passengers require a commercial driver's license (CDL). Members of the Moscow Volunteer Fire Department are exempt from the CDL requirement per Idaho Code § 49-302(3).

E. Employees who drive their personal vehicles on City business are subject to the requirements of this Policy including:

1. Maintaining auto liability insurance with minimum state limits.

2. Maintain their vehicle in a safe operating condition when driven on City business.

F. Assigned or Permitted Drivers

1. Each employee assigned to a City vehicle or employees who operate a City vehicle or personal vehicle while conducting City business is required to have a valid driver's license. Should an employee's driver's license expire, be revoked or suspended, the employee shall immediately notify their supervisor. During the entire time of the revocation or suspension, the employee's City vehicle-use privileges will be suspended. Under no circumstances will such an employee operate a City vehicle until the employee's driver's license has been fully restored and validated.

2. Each employee assigned or permitted to operate a City vehicle shall be responsible for the proper and safe operation of the vehicle.

G. To evaluate employees as drivers, management may:

1. Review past driving performance and work experience through reference checks with previous employers;

2. Review the employee's driver's license record (DLR);

3. Ensure the employee has a valid driver's license; and

4. Ensure that the employee is qualified to operate the type of vehicle they will drive.

H. Seatbelt Use - Except as specifically authorized herein, all drivers and passengers are required to utilize seatbelts as mandated by law. Exception: City sworn law enforcement officers may dispense with wearing safety restraints in specific tactical situations or when it reasonably appears that, due to unusual circumstances, wearing a seatbelt would hinder rather than increase safety. Idaho Code § 49-673(2)(b).

I. Mobile Communication Device, Cell Phone and Computer Use - Except as specifically authorized herein, the driver of a City vehicle, or any other vehicle being used for City business, is prohibited from using a mobile communication device, cell phone or computer of any type while the vehicle is in motion. Drivers must be safely parked before using phone or mobile computer equipment. For purposes of this section of this Policy, a mobile communication device is defined as "a text messaging device or a wireless, two-way communication device designed to receive and transmit voice or text communication". This section of this Policy does not apply to City work-related two-way radios. Exception: Moscow Volunteer Fire Department Command Staff may use mobile communication devices in specific tactical situations. City sworn law enforcement officers may use mobile communication devices in specific tactical situations or as otherwise authorized by the Chief of Police.

J. Smoking Prohibited in Vehicles - Smoking is expressly prohibited in all City vehicles.

K. Impaired Driving - No driver shall operate a City or a personal vehicle while on City business when their ability to do so is impaired or influenced by: alcohol, illegal drugs or other illegal or intoxicating substances, prescribed or over-the-counter medication, or illness, fatigue or injury. The employee driver is obligated to report to their supervisor any reason that may affect their ability to drive safely.

L. Proof of Insurance - Employee drivers must make sure that the current insurance card is kept in the vehicle at all times.

M. Accident Reporting

1. In the event of an accident, the driver shall, when possible, first check on the safety and welfare of all persons involved and seek immediate medical attention (should it be required for themselves or others).

2. 2. Drivers shall always report any incident that involves a City vehicle or an instance when driving a personal vehicle while conducting City business to the police. This will help ensure that the employee and the City are protected from unwarranted claims. No driver or passenger should discuss fault with or sign anything from anyone except for a police officer, a representative from the City's insurer, or an authorized representative of the City.

3. Vehicles should be left at the scene of the accident until police arrive. If there is an immediate danger or hazard, the vehicle should be moved to a safe location out of the way of traffic.

4. Drivers and/or the Drivers emergency contact, shall notify their supervisor as soon as possible of the accident and report on the required City form the extent of the injuries and property damage involved notifying the City Clerk in order to complete the applicable and required forms within five (5) working days, unless additional time is required due to the extent of the employee's injuries and inability to complete the required forms within five (5) working days. The supervisor may need to assist with completing the required forms.

5. Drivers should refer to the Drug and Alcohol Testing Policy as in the event of an accident drug and alcohol testing may be required.

6. Drivers shall cooperate fully with the City and the claims department of the City's insurer during the handling of the claim.

N. Traffic Violations - All fines and other criminal penalties resulting from violations of the law by the driver are the personal responsibility of the driver of any City vehicle. These costs are not reimbursable by the City and must be paid promptly by the driver.

O. Vehicle Registration, Maintenance and Repair

1. If the City vehicle needs repairs, the vehicle should be scheduled for repair.

2. Maintenance of the vehicle registration, license plates and inspections are the responsibility of the Street/Vehicle Maintenance Manager.

VI. Social Media

A. The City of Moscow's use of social networking is for the primary function of communicating and delivering information directly to the public about government matters.

B. Personal social media accounts should not be utilized for City business and is not approved to be utilized for City business. To the extent an employee, elected official, commission member, or anyone appointed to conduct City business utilizes a personal account for City business, they are responsible for maintaining those records and providing those records for public record requests or potential lawsuits or litigation.

C. In terms of personal use, it is not the intent of the City to restrict an employees', agents' or officers' First Amendment rights, but rather to ensure that Content posted by employees, agents or officers clearly reflect that those comments are personal and not being made on behalf of the City unless authorized by the City.