Moscow City Council

Regular Meeting
~Agenda~

www.ci.moscow.id.us

Laurie M. Hopkins
City Clerk

208.883.7015

Monday **February 6, 2023**	**7:00 PM**	**Council Chambers** **206 E. Third St.**

The Moscow Mayor, City Council and Staff welcome you to tonight's meeting. This meeting is open to the public. We appreciate and encourage public participation. For regular agenda items, an opportunity for public comment is sometimes provided after the staff report. However, the formality of procedures varies with the purpose and subject of the agenda item; therefore, the Mayor may exercise discretion in deciding when to allow public comment during the course of the proceedings and limitations may be placed on the time allowed for comments. Citizens wishing to comment on business that is not on the agenda will be provided the opportunity to do so during the public comment item on the agenda. If you plan to address the Council, you will find a list of "Tips for Addressing the Council" in the door pocket outside the City Council Chambers. Please note that Moscow City Council meetings are televised, videotaped and/or recorded. Links to view the City Council meeting live can be found on the City website, YouTube, Facebook and Spectrum Cable 1301. Thank you for your interest in City government.

PLEDGE OF ALLEGIANCE

CONSENT AGENDA

1. All Consent Items (ACTION ITEM)

A. Approval of Moscow City Council January 17, 2023 Minutes - Laurie M. Hopkins

B. Approval of Memorandum of Understanding between the City of Moscow and the Idaho Transportation Department to establish a Car Seat Inspection Station - Capt. Roger Lanier / Officer Eric Warner

The City of Moscow is entering into a Memorandum of Understanding (MOU) with the Idaho Transportation Department (ITD), Office of Highway Safety, Car Seat Program. The purpose of this MOU is to establish a car seat inspection station where parents and caregivers can learn how to keep children safe while training in passenger vehicles by using appropriate car seats, booster seats or seat belts correctly. This is accomplished through one-to-one instruction provided by nationally certified Child Passenger Safety technicians. This was reviewed by the Administrative Committee on January 23, 2023 and recommended for approval.

ACTION: Approve of the Memorandum of Understanding between the City of Moscow and Idaho Transportation Department.

C. Proposed Lot Division generally located southwest of the West Palouse River Drive Ball Fields Property and southwest of the University of Idaho Arboretum – Aimee Hennrich

The applicant, BBC LLC, is requesting a lot division to create four lots of approximately 23,075 sf (.53 acres), 46,362 sf (1.06 acres), 72,306 sf (1.66 acres), and 457,537 sf (10.50 acres) in size from an existing parcel of 599,277 sf (13.76 acres) in size. The property is generally located southwest of the West Palouse River Drive Ball Fields Property and southwest of the University of Idaho Arboretum and was annexed and rezoned in 2022 to the Residential Office (RO) and Medium Density Residential (R-3) Zoning Districts. The 10.50-acre portion of the subject property that is Zoned R-3 is where the Edington Estates PUD and Preliminary Plat was approved in 2022.

Edington Estates will still need to receive final plat and PUD approval before the subdivision is finalized. The intention of the proposed lot division is to separate the Residential Office (RO) Zoned portion from the Medium Density (R-3) Zoned portion of the property, and also divide the RO area into three (3) lots. All proposed lots meet the minimum lot area and frontage requirements of their respective zoning designations. This item was reviewed and recommended for approval by the Public Works and Finance Committee on January 23, 2023.

ACTION: Approve the lot division request with no conditions.

D. Proposed Lot Line Adjustment of Lots 4, 5, and 7, Block 2, of Anderson 7th Addition – Aimee Hennrich

The applicant, Jim Swift, is requesting a lot line adjustment between three properties legally described as Lots 4, 5, and 7, Block 2, of Anderson 7th Addition. The proposed lot line adjustment would increase Lot 4 from 9,975 sf to 11,400 sf, Lot 5 from 9,975 sf to 11,400 sf, and decrease Lot 7 from 26,565 sf to 23,715 sf. The subject lots are currently vacant land and were previously platted within the Anderson 7th Addition Subdivision. One of the original conditions of approval of the Anderson 7th Addition was that, "Lot 7, Block 2 shall be converted to a flag lot with the flagpole portion providing direct access to Sunnyside Avenue and no vehicular access shall be permitted from Palouse River Drive". On September 6, 2022 City Council approved a request from the applicant to amend this condition of approval to state that, "Vehicular access to Lot 7, Block 2 shall only be permitted from Palouse River Drive for a commercial use upon the property". Since a commercial use is anticipated for Lot 7, Block 2, the applicant is proposing to eliminate the flagpole portion of the lot since access to Sunnyside Avenue is no longer needed. The subject lots are currently zoned Multiple Family Residential (R-4). In the R-4 Zone, the minimum lot size is 5,000 sf and the minimum lot width is 50 feet. All proposed lots meet the minimum lot size and width requirements of the R-4 Zone. This item was reviewed and recommended for approval by the Public Works and Finance Committee on January 23, 2023.

ACTION: Approve the lot line adjustment request.

E. Personal Delivery Devices License Agreement-Starship Technologies - Cody Riddle

Starship Technologies is seeking a non-exclusive license agreement to operate personal delivery devices in the public right-of-way. This was reviewed by the Administrative Committee on January 23, 2023 and recommended for approval.

ACTION: Approve the proposed license agreement.

F. Lilly Street Reconstruction 'A' St. to Third St. Rebid - Bid Results & Contract Award - Scott Bontrager

The Lilly Street Reconstruction project includes the reconstruction of Lilly Street ('A' St to Third St) and First Street (Lieuallen St to Lilly St). The base bid consists of the full replacement of Lilly Street underground utilities, curb and sidewalk, and full-depth roadway replacement. Also included in the base bid is the realignment and daylighting of Hogg Creek and an extension of the existing pathway system along First Street. The Add Alternate bid consists of the reconstruction of First Street pavement, curb, sidewalk, and the installation of a new water main. The City published an advertisement for bids on December 3, 2022, and the Engineer's Estimate for construction is $1,805,308.40 for Base Bid and $153,093.00 for the Add Alternate.

Bids were opened on January 10, 2023, at which three (3) bids were received. The Base Bids ranged from $1,892,320.25 to $1,969,698.95 and Add Alternate bids ranged from $166,354.66 to $179,609.00. Of those, the lowest responsive bid received was submitted by Big Sky Corporation with a Base Bid of $1,871,406.50 and an Add Alternate bid of $174,237.00. A bid analysis is included in the Committee packet. The Moscow Urban Renewal Agency (MURA) had previously committed $200,000 in project funding in accordance with the Agency's Capital Improvement

Plan. Staff has also requested MURA provide an additional $200,000 to help with cost escalations since the original funding was committed to the project. This was reviewed by the Public Works/Finance Committee on January 23, 2023, and recommended for approval.

ACTION: Accept the low bid from Big Sky Corporation, award the contract for the base bid in the amount of $1,871,406.50 as well as the bid alternate in the amount of $174,237.00 contingent upon the MURA providing an additional $200,000, and authorize staff approval of construction change orders in an amount not to exceed 10% of the contract amount.

G. Approval to update authorized signers on the City of Moscow Wells Fargo, Zions and US Bank Accounts - Sarah Banks

The Finance Department is updating authorized signers on The City of Moscow Wells Fargo, Zions and US Bank accounts. We are removing previous City Supervisor Gary Riedner, previous Mayor William Lambert, and previous Treasury Management Coordinator Julie Fry. We are adding City Supervisor Willard Belknap, Mayor Art Bettge, and Assistant Finance Director Renee Tack.

ACTION: Approve updating the authorized signers on the City of Moscow Wells Fargo, Zions and US Bank accounts.

REGULAR AGENDA

2. Mayors Appointments (ACTION ITEM)

3. Public Comment and Mayor's Response Period (limit 15 minutes)

4. Citizen Commission Report - Moscow Arts Commission - Megan Cherry / Lauren McCleary

5. Proposed Lot Division and Lot Line Adjustment at 412 and 418 Southview Ave (ACTION ITEM) – Aimee Hennrich

The applicant, Ryan Itani, is requesting a lot division to create three lots of approximately 7,292 sf, 7,695 sf, and 7,975 sf in size from two existing parcels of 11,028 sf and 11,977 sf in size. The properties are addressed as 412 and 418 Southview Ave. The intention of the lot division is to create one additional single-family lot. The subject properties are located within the Moderate Density, Single Family Residential (R-2) Zoning District which requires a minimum lot size of 7,000 square feet. All proposed lots meet the minimum lot area requirements of the R-2 Zone. This item was reviewed by the Public Works and Finance Committee and recommended for approval on January 23, 2023.

PROPOSED ACTIONS: Approve the lot division and lot line adjustment request with no conditions; or approve the lot division and lot line adjustment request with conditions; or deny the lot division and lot line adjustment request; or provide staff further direction.

6. Public Hearing - Fee Resolution Amendment to include fees for Personal Delivery Devices (ACTION ITEM) – Cody Riddle

On August 1, 2022, the City Council adopted Resolution 2022-23, establishing fees for services to take effect on October 1, 2022 (Fee Resolution). Since that time, staff has developed an agreement for licensing the operation of personal delivery devices in the City right-of-way. As there is staff time to administer this license, a new fee of $250.00 is proposed. Per Idaho Code 63-1311A, amendment of the Fee Resolution to include a new fee requires a public hearing. Staff has noticed the hearing per Idaho Code and the draft resolution is presented to the City Council for review. The new fee is listed as Item J, located on page 17 of the attached resolution. It is identified as "Personal Delivery Devices Annual License Fee". This is the only change proposed to the existing fee structure.

PROPOSED ACTIONS: Conduct a public hearing to consider the FY2023 Fee Resolution

amendment and approve the additional licensing fee for personal delivery devices; or provide staff further direction.

7. **2022 Citizen Survey Report Presentation (ACTION ITEM) - Bill Belknap**

   2022 marks the tenth comprehensive Citizen Survey conducted by the City of Moscow. Surveys have been conducted biennially since 2002 with the exception of 2020 due to the COVID-19 pandemic. These regular assessments serve as a benchmark of community perceptions and provide an evaluation of the municipal services delivered by the City of Moscow as measured by its residents. The results of each survey are used as a resource to assist in strategic planning efforts and resource allocation by City leaders by providing a means to measure citizen satisfaction with the City government and the services provided. Staff will provide an overview of the survey and the results for the Council's consideration.

   PROPOSED ACTIONS: Accept the 2022 Citizen Survey report; or take other action as deemed appropriate.

8. **Legislative Travel and Meetings Budget Discussion (ACTION ITEM) - Bill Belknap**

   Within the City's Legislative Fund budget, there is funding allocated for Council members' travel to various educational meetings and conferences. Prior to the 2021 fiscal year, the City budgeted $16,000 annually for those expenses. During the COVID-19 pandemic, there was a significant reduction in travel expenses and the budgeted amount was reduced to $10,000 annually, which was what was budgeted for the FY2023 fiscal year. Post-pandemic, Council member travel and overall travel expenses and hotel rates have increased and are likely to exceed the $10,000 budgeted amount. In addition, two Council members have expressed a desire to attend the National League of Cities Congressional City Conference that will be held in March of this year. Within FY2023, the Council has $20,000 budgeted for non-prioritized projects that could be utilized to fund the additional travel expenses. Staff would recommend an allocation of $10,000 of the non-prioritized project line item for these additional travel expenses.

   PROPOSED ACTIONS: Approve allocation of $10,000 from Legislative Non-Prioritized Projects line item 101-010-670-16 for Council travel expenses; or take other action as deemed appropriate.

REPORTS

City Council

Mayor

ADJOURN TO EXECUTIVE SESSION PER IDAHO CODE 74-206 (1)(F) - THE MEETING WILL NOT RECONVENE.

NOTICE: It is the policy of the City of Moscow that all City-sponsored public meetings and events are accessible to all people. If you need assistance in participating in this meeting or event due to a disability under the ADA, please contact the City's ADA Coordinator by phone at (208) 883-7600, TDD (208) 883-7019, or by email at adacoordinator@ci.moscow.id.us at least 48 hours prior to the scheduled meeting or event to request an accommodation. The City of Moscow is committed to ensuring that all reasonable accommodation requests are fulfilled.

Moscow City Council

Regular Meeting
~Minutes~

www.ci.moscow.id.us

Laurie M. Hopkins
City Clerk

208.883.7015

Tuesday **January 17, 2023**	**7:00 PM**	**Council Chambers** **206 E. Third St.**

The meeting was called to order at 7:00 p.m.
PRESENT: Mayor Art Bettge, Sandra Kelly, Maureen Laflin, Hailey Lewis, Julia Parker, Gina Taruscio
STAFF: Bill Belknap, Mia Bautista, Cody Riddle, Tyler Palmer, Cody Riddle, Nate Suhr, Mike Ray, Alisa Anderson, Amanda Argona, David Schott, Laurie M. Hopkins

PLEDGE OF ALLEGIANCE
Council Member Davis led the Pledge of Allegiance.

CONSENT AGENDA

1. **All Consent Items (ACTION ITEM)**

   A. **Approval of Moscow City Council January 3, 2023 Minutes - Laurie M. Hopkins**

   B. **Approval of Disbursement Report December 2022 - Sarah Banks**
   Staff presented the December 2022 Accounts Payable Report to the Public Works / Finance Committee on January 9th, 2023. The Committee received the report and approved the disbursements as presented.
   ACTION: Accept the Disbursements Report for the month of December 2022.

   C. **Approval of the First Quarter Financial Report October 1, 2022 to December 31, 2022 for FY2023 - Sarah Banks**
   Staff presented the financial report for the first quarter of Fiscal Year 2023 (October 1, 2022 to December 31, 2022) to the Public Works/Finance Committee on January 9th, 2023. The Committee received the report.
   ACTION: Accept the FY2023 First Quarter Report.

   D. **Idaho Commission on the Arts Grant Application: Public Programs in the Arts - Megan Cherry**
   The Arts Department seeks approval to apply for an annual grant administered by the Idaho Commission on the Arts (ICA). The Public Programs in the Arts (PPA) grant program is intended to provide general operating support for arts organizations in Idaho. These funds will represent off-setting revenue in the production of Arts Department events including Entertainment in the Park and Artwalk. If the application is successful, funds are typically available at the end of the City of Moscow's FY2023, and would be deferred for use in FY2024. This was reviewed by the Administrative Committee on January 9, 2023 and recommended for approval.
   ACTION: Approve the Public Programs in the Arts (PPA) grant application for the current cycle.

DRAFT

E. 2023 Whitcom Emergency Dispatch Services Agreement - James Fry

The City currently contracts with Whitcom for emergency dispatch services. The most recent agreement executed on March 31, 2021, was for two years including the 2021 and 2022 calendar years, and expired on December 31st of last year. On December 19th, 2022, the City received a proposed agreement from Whitcom for the 2023 calendar year. Historically, the cost for dispatch services for the City of Moscow had been calculated to be 21.25% of the annual Whitcom budget based upon call volumes and other considerations, which totaled $607,213.25 for the 2021 calendar year and $712,911.00 for the 2022 calendar year. Over the last year, the Whitcom Finance Committee has been revisiting the cost allocation model and anticipates proposing an updated cost allocation for 2024 and beyond. In the interim, Whitcom is proposing to continue with the prior percentage allocation for the 2023 calendar year which will total $803,263. At the time of the FY2023 budget development, Whitcom had not finalized its annual budget, and as a result, Staff was required to estimate an anticipated future contract amount of $791,500 for FY2023. The updated agreement will result in a slight budget overrun of $11,763 in line item 101-075-642-91 which can be absorbed within the general fund expenses. This was reviewed by the Public Works/Finance Committee on January 9, 2023 and recommended for approval.

ACTION: Approve the proposed emergency dispatch services agreement with Whitcom.

F. Winterfest Alcohol Use Request in Entertainment District - Amanda Argona

The Moscow Chamber of Commerce + Visitor Center is hosting its annual Moscow Winterfest on Saturday, February 4th, from 12 pm to 4 pm on Main Street between 3rd and 6th Streets. The annual event is stylized as an 80s themed apres ski block party. The applicant anticipates 9 (nine) licensed beer and/or wine vendors and ten (10) non-alcoholic and/or food vendors. Proposed activities include corn hole, snowball bullseye toss, snowman building contest, Simon Says with skis, oversized Yahtzee and Connect Four, lip-sync battle, and photo booth. Warming fires may be provided at the event at the determination of the Moscow Volunteer Fire Department. The event has been reviewed by staff and approved as of December 14, 2022. Following standard operating procedures for events with alcohol that are within the Entertainment District boundaries, Moscow Winterfest is requesting a temporary suspension of the open container law by resolution. Per Moscow City Code, Title 10, Chapter 1, Section 1-12; a draft resolution has been prepared for Council's consideration. This was reviewed by the Administrative Committee on January 9, 2023 and recommended for approval.

ACTION: Approve the resolution allowing for the temporary suspension of the open container law within the event footprint of the Entertainment District for Moscow Winterfest for the duration of the event.

Taruscio moved and Laflin seconded to approve the consent agenda as presented. Roll Call Vote: Ayes: Unanimous. Nays: None. Abstentions: None. Motion carried.

REGULAR AGENDA

2. Mayors Appointments (ACTION ITEM)

Mayor Bettge presented to the City Council for consideration the appointment of Sue Scott to the Planning and Zoning Commission. Kelly moved and Taruscio seconded approval of the appointment. Roll Call Vote: Ayes: Unanimous. Nays: None. Abstentions: None. Motion carried. Sue Scott said she has been on P&Z previously as well as being a council member. She has been in Moscow for 40 years.

3. Public Comment and Mayor's Response Period (limit 15 minutes)

Sue Scott (Moscow) after losing her driver’s license, she ran into an issue proving her residence as her spouse was the only person on her utility bills. She suggested adding an announcement in the water billing newsletter to have account holders add all tenants to the utility account.

DRAFT

4. Citizen Commission Report - Historic Preservation Commission - Mike Ray / Nels Reese

Ray introduced Nels Reese, the chair of the HPC. New historic street signs have been installed in the Fort Russell District. Public buildings and homes from the 1930's have been added to the Fort Russell District. A handout was created to encourage home owners to consider alterations according to the year of their home. An informational sign was installed at the library. The next informational sign the Commission would like to create is for Friendship Square. The Commission has been awarding Orchids for more than twenty years and have awarded more than 100 awards during that time.

5. Appeal of Daycare License (ACTION ITEM) - Cody Riddle / Jubilee School Montessori

Malia Mason, representing The Jubilee School Montessori, is appealing Staff's denial of a childcare license for a facility located at 1410 S. Blaine Street, in the Eastside Marketplace. A review of the application materials confirmed the request did not meet the requirement to provide an outdoor play area adjacent to the facility. After hearing the appeal, Council has the discretion to uphold the denial, or may direct Staff to issue the license upon a finding of good cause.

PROPOSED ACTIONS: Consider merits of the appeal and uphold denial of the license; or upon a finding of good cause, direct the City Clerk to issue a daycare facility license to Jubilee Montessori School; or take other such action deemed appropriate.

Riddle introduced the item as written above. There are areas that could be used for an outdoor space. Both options are not adjacent to the daycare but the Council has the discretion to issue or uphold the denial. The strict code interpretation is “adjacent” and a previous exception was made in order to cross the roadway. There is a school and a childcare facility already in the mall.

Melina Mason, Director of the Jubilee school, expanded the school to include daycare. She requesting a waiver as Moscow doesn't recognize three-year-olds as school age children. The three-year-olds are only at the facility for 3.5 hours, give or take some time for drop off and pickup. That time is spent learning which includes control of movement so they are not sitting at a desk the entire 3.5 hours, but the time does not include outside time that would need a playground. In answer to Council questions, Mason explained she recently found that adding the younger children requires a Conditional Use Permit and staff suggested requesting this waiver prior to CUP application. She has requested a quote for fire sprinkler requirements and would need approval from the mall owner in order to install.

Lewis pointed out by definition the addition of three-year-olds would fall into the daycare definition. She confirmed the waiver is being required because they would not use a playground. Lewis also confirmed fundamentally the program itself functions not as a daycare and only as a school.

Mason answered Laflin’s question that both organizations that use the two playgrounds have offered use of the playgrounds to the Montessori school and that the playground in the back would be more convenient. She is Montessori trained and is the director. Her employee is being trained. There is no before or after school care.

Parker felt if three-year-olds are being taken care of, it is still a daycare whether education is provided or not. All of the places are providing some sort of education. Parker said they spent a long time on the daycare code and should adhere to it. Kelly commented Montessori schools have a long history of curriculum and what they do and act as a school. Council has leeway to grant a waiver. They are fulfilling the needs, have the curriculum, teaching it this way, and felt in this instance a waiver is appropriate. Taruscio heard both sides of the argument and felt torn. There is a strong demand for child care but felt there is a structured education.

Riddle responded to Davis that a CUP is a separate application with Planning and Zoning Commission (P&Z) and because Council would have already made a decision on the outdoor space, it would be

removed from the application and wouldn't be reviewed by P&Z. Belknap said the view it as a license for a daycare facility and if grant appeal, you are giving a waiver from the outdoor play area.

Parker and Kelly discussed a hypothetical example. Kelly felt it is determined by the situation and Council has discretion. Parker felt curriculum and no outdoor area is a choice. Lewis said curriculum isn't defined in the state code. She is nervous as to what precedent a waiver would make. She felt it still needed to be treated like a daycare and keep an outdoor space no matter the curriculum. Kelly pointed out there is a playground available, assigned to another daycare but they have been given permission to use it. Mason responded yes, it is available but not adjacent.

Belknap said the rear play area is considered adjacent but needs to be fenced. The code has no playground requirement for schools, only daycares. He explained the process is if an applicant cannot meet the basic licensure requirements for a daycare, it would come to the council first, before going through the land use proceedings. If the Council wants to require the applicant to meet the city's requirements, then the appeal would be denied and all requirements would need to be met. The zoning code requires the fence. If the Council granted the appeal with a condition to install the fence within one year of the granting of the appeal, it would be reviewed at the time of the license renewal.

Parker suggested not approving the waiver and work to put in a fence to come into compliance. Kelly said she advocated for the daycare rules. However, sometimes it needs to be looked at case by case and what they are providing.

Lewis moved to approve the waiver with the condition of one year to meet the requirement of fencing the outdoor space. Laflin seconded. Roll Call Vote: Ayes: Two (Lewis, Laflin). Nays: Four (4). Abstentions: None. Motion failed.

Parker moved to uphold the denial of the license. Taruscio seconded. Roll Call Vote: Ayes: Three (Lewis, Parker, Taruscio). Nays: Three (Kelly, Laflin, Davis). Abstentions: None. The Mayor voted nay to break the tie. Motion failed.

Davis said he recognizes the effort and work put into updating the day care code. He also understands there is a need for review and see past stringent requirements when needed.

The Council members discussed wording for a motion and the finding of good cause for the appeal, including curriculum, fencing and lack of necessity for a playground.

Taruscio moved to grant the appeal and direct the City Clerk to issue a daycare facility license to Jubilee Montessori School because of the unique operating characteristics of the Montessori school. Kelly seconded. Roll Call Vote: Ayes: Four (Kelly, Laflin, Taruscio, Davis). Nays: Two (Parker, Lewis). Abstentions: None. Motion carried.

6. Consideration of the Moscow Area Mountain Bike Association License Agreement for the Moscow Mountain Property Trail Proposal (ACTION ITEM) - David Schott

Moscow Area Mountain Bike Association (MAMBA) has reached out to the City of Moscow with a trail proposal for the City's Moscow Mountain Property, located on top of Moscow Mountain near the intersection of Moscow Mountain Road and Rock Creek Road. The proposal includes the construction of a trail system on the Moscow Mountain Property to connect with other existing trails in the surrounding area. Currently, the property is undeveloped and is not managed for recreational purposes. There are currently no future plans for this property. MAMBA intends to apply for an Idaho Department of Parks and Recreation Mountain Bike License Plate Grant, which is due on January 27, 2023. The

preliminary estimate provided by MAMBA for trail construction is $10,000. MAMBA has requested financial participation by the City for matching funds to show community support for the project to the Idaho Department of Parks and Recreation in the amount of $5,000. This was reviewed by the Administrative Committee on January 9, 2023 and recommended for approval to the full Council.

PROPOSED ACTIONS: Approve the License Agreement for the proposed trail system on the Moscow Mountain Property and financially participate in the amount of $5,000 as matching funds for the Idaho Department of Parks and Recreation grant; or take other action as deemed appropriate.

Schott introduced the item as written above and provided highlights of the trail proposal. The trails will conform to the International Mountain Bicycling Association standards which are more sustainable, enjoyable and will use natural occurring features highlighting the unique topography of Moscow Mountain. Four trails are proposed with different features and distance. MAMBA will provide long-term maintenance of the trail.

Kelly said the Administrative Committee asked for it to be on regular agenda as it is an exciting project and helps with tourism. Lewis clarified the $5,000 is for materials because MAMBA has many volunteers willing to help in-kind. Lewis moved to approve the License Agreement for the proposed trail system on the Moscow Mountain Property and financially participate in the amount of $5,000 as matching funds for the Idaho Department of Parks and Recreation grant. Taruscio seconded.

Taruscio commended the volunteers and project. Roll Call Vote: Ayes: Unanimous. Nays: None. Abstentions: None. Motion carried.

7. Lola Clyde Park - Land Water Conservation Fund Grant Request (ACTION ITEM) - Alisa Anderson / David Schott / Nate Suhr

City Staff is seeking approval to submit a federal funding request to the Idaho Department of Parks and Recreations (IDPR) for consideration under the Land and Water Conservation Fund (LWCF) for Lola Clyde Park. The project elements will include roadway frontage improvements, parking, and an internal pathway system within the lower area of the park. If approved by IDPR and the Land and Water Conservation Board, the request will then be submitted to the National Park Service for further consideration. This item was reviewed by the Public Works/Finance Committee on January 9, 2023, and recommended for approval.

PROPOSED ACTIONS: Approve the submittal of a grant request for Lola Clyde Park to the Idaho Department of Parks and Recreation under the Land and Water Conservation Fund in an amount not to exceed $750,000 in federal grant funds, or take other action deemed appropriate.

Anderson introduced the item by a brief history of the Land and Water Conservation Fund and requirements projects must address. The original concept design process started in 2015 and has included projects that meet the eligibility requirements and are approved by the IDPR staff are then moved forward to the State LWCF Advisory Board for a formal presentation scheduled for February 28 or March 1, 2023. If approved by the LWCF Advisory Board the funding request is then submitted to the National Park Services for review. If awarded, notification would be received in late 2023 and an award agreement and funding would not be received until mid-2024. After award the City would be given two years to design and complete the project anticipated to be FY25-26. This aligns with the capital improvement plan.

Suhr described the project saying improvements are proposed on both Polk Street and Rodeo Drive. Improvements would include curb and gutter, sidewalks, pedestrian ramps, and parking stalls. A sidewalk on Rodeo Drive will connect to Palouse Clearwater Environmental Institute. Polk Street is designed to have a winding pathway and an in/out parking lot. An in-kind match of $347,400 and capital contribution of $450,000 allows a grant request application of $750,000. During construction of the parking and sidewalk on Rodeo, access would be hindered but it is anticipated to do half street paving in order to keep the south side of the roadway open. Outreach and communication with PCEI will be necessary.

Anderson added the City will also submit an Idaho Department of Commerce application for a restroom similar to the one being installed at Indian Hills Park. The restroom would be installed before the sidewalk improvements.

Kelly moved to approve the submittal of a grant request for Lola Clyde Park to the Idaho Department of Parks and Recreation under the Land and Water Conservation Fund in an amount not to exceed $750,000 in federal grant funds Laflin seconded. Roll Call Vote: Ayes: Unanimous. Nays: None. Abstentions: None. Motion carried.

8. Sanitation Report - Tim Davis / Tyler Palmer

Palmer explained the City contracts with Latah Sanitation, Inc. (LSI), dba Inland North Waste, for solid waste collection, roll-off and compactor services, operation of the solid waste processing facility (SWPF), composting facility, recycling collection and operation of the City owned recycling center. In addition to solid waste collection services, services provided at the solid waste processing facility include the Transfer Station, where the collected municipal solid waste (MSW) is transferred from collection trucks to larger trailers before being long hauled for ultimate disposal. The processing facility also accepts items such as demolition and construction debris. It has a composting facility where biosolids from the City Water Reclamation Facility are delivered and a household hazardous waste (HHW) facility where the public can drop off unwanted or unused chemicals and pesticides. In FY2022, there was 23,355 tons of MSW shipped, 5866 tons NMSW landfilled locally, approximately 4300 tons biosolids composted, 5016 tons yard waste composted and 2826 tons of recyclables processed. The City separately contracts with Finley Buttes Partnership, a subsidiary of Waste Connections, for transportation and disposal of all municipal solid waste accepted at the SWPF. Once the waste is loaded on transport trailers, it is trucked to Finley Buttes Landfill, located in Boardman, Oregon. Palmer provided a brief history of the export of municipal solid waste and the change to federal regulations since the early 1990's. After the decision was made back in the early 1990's to export the MSW, the City took the lead and has separate contracts for disposal with Latah County and the cities of Bovill, Deary, Genesee, Juliaetta, Kendrick, Potlatch, Troy and Elk River. These municipalities have their own collection agreements separate from Moscow, but once the waste is collected, it is delivered to the SWPF for disposal where it then falls under the City disposal agreement.

The Sanitation Utility attempts to conduct a Rate Study every 5 years, with the most recent Sanitation Rate Study adopted by Council in early 2022. Within the financial forecast of the rate study, collection and solid waste processing facility are expected to be self-sufficient. These principles are designed to produce rates that proportionately recover costs from each customer class by setting the appropriate level of revenue to be collected from ratepayers and establishing a rate structure to collect those revenues. The three key analyses completed as a part of the rate study process are 1.) Revenue Requirement. This analysis identifies the total revenue requirement to fully fund the collection and solid waste processing facility functions on a standalone basis. 2.) Cost of Service. This analysis equitably distributes costs to customer classes based on their proportional demand and use of the system. 3.) Rate Design. This analysis includes the development of rate structures that generate sufficient revenue to meet each function's revenue requirement forecast.

The volatility of recycling markets caused by China Sword and more recently, the general downturn to the economy, triggered the City to re-evaluate future recycling facility investments. As a result, no future annual transfers to the capital reserve are anticipated. The capital reserve is approximately $6.4 million. With adequate capital reserve funding in place for the very near future and no future anticipated transfers to the fund, $1.7 million of the capital reserve is anticipated to be transferred to the landfill closure/post

closure fund in the current fiscal year to conduct a landfill closure plan (as required by the Franchise Agreement) for the existing and future NMSW landfill cells at the SWPF. The City also has landfill closure cost liabilities for current and future NMSW landfill cells. Landfill cell closure is being conducted by LSI and paid for by the City as cells reach capacity. LSI is then compensated along the way for applying necessary cover to the landfill and not carrying that liability until the end of the contract or life of the entire landfill. The City paid LSI $172,257.50 in FY22 for final closure on an asbestos cell and $126,000 for partial closure of a NMSW landfill cell in FY23. Closure consists of 12" to 18" of compacted soil cover with 6" additional inches of vegetative material (top soil) and planting of certain vegetation. The remaining reserve fund continues to be available for potential Recycle Center upgrades and unanticipated major repairs, such as the truck scale failure and replacement at Moscow Recycling in March of 2021, in the amount of $79,794.

In 2017, China Sword essentially banned the import of recyclables and added 0.5% contamination rate. The U.S. had lack of infrastructure to handle the excess materials and market prices plummeted and much of the recycling material was landfilled. When the commodities dropped in 2019, Moscow and LSI came to an agreement to establish a10-year floating average which meant both entities would share in risk and reward. If the 10-year average price was higher than the current year average, the City would pay LSI 50% market difference. If the current year average price was higher than the 10-year average, LSI would pay the City 50% market difference. In 2019 the City made a retroactive payment to LSI in the amount of $98,643.84. In 2020, the City made a payment to LSI for $76,840.18. In 2021, LSI made a payment to the City for $1,651.41. In 2022 a payment was owed to the City by LSI for $29,873.99 but has been deferred for a year.

The contract with LSI was amended in 2020. Amendments included: City agreed to compensate LSI additional $40,000 annually for extra alley helper route; tires and household hazardous waste disposal costs outstripped LSI's compensation so the City assumed tire and HHW disposal costs resulting in $20,000 annual savings to LSI; City offered to pay the shipping costs to a material recovery facility for single stream recycling processing located in Eugene Oregon that offered no processing fees with the processing savings resulting in $31,000 savings to LSI in 2022.

The 2013 Franchise Agreement amendment included a CPI increase to LSI from 85% to 100%. It was expected that this increase would be in lieu of any future fuel relief. In June 2022, LSI requested a 20.18% across the board increase and later revised the request to 22.85%. In August 2022, LSI revised the prior requests for across the board increases to 12.23%. These requests were in addition the 5.25% CPI increase that they were due contractually in October.

The City Council recently approved a fuel relief request from Finley Buttes Partnership due to unanticipated and significant increases in fuel costs over past year. The fuel model developed used common industry standards that provides reimbursement for excessive fuel cost increases and credits for fuel cost reductions. The City offered LSI the same fuel relief based on their actual fuel usage to carry out City of Moscow tasks, but the offer was rejected. LSI has yet to provide City fuel usage information and staff is unable to estimate any amount of fuel relief as a result.

The City has reached an agreement in principle for additional compensation to LSI for dumpster costs that have outstripped the CPI in a meeting held on October 6, 2022. LSI has yet to provide the City of Moscow any dumpster cost increase information. Staff is unable to estimate any amount of dumpster cost increases as a result. The City also reached an agreement in principle to provide additional compensation to LSI for

the costs of roll carts. The annual CPI adjustments were never applied to the roll cart costs in the past but will be incorporated to the Franchise Agreement amendment currently under way. LSI has been out of 65-gallon recycling roll carts since this past summer and has recently run out of 95-gallon recycling carts. LSI has not provided a time line to order and receive additional recycling roll carts. Staff said it is difficult to quantify actual staffing costs beyond the CPI because as a private business the City can't dictate what the salaries are, how many people are hired, etc. To help alleviate some of the costs, staff provided information on how to become a CDL training facility as CDL training costs have increased. Where LSI received a 5.25% CPI increase, water only saw an increase of 5%, sewer a 2.25%, and storm no increase.

Preliminary results from the citizen survey, all the utilities had a rating above the 20-year average with the exception of LSI. Staff is concerned and will work with LSI on solutions. Things they have worked on to improve are services to the downtown corridor, branch clearing for trucks, and communication regarding alley mis-stops.

In answer to questions from Council members, the uptick of requests for price increases were seen when China Sword happened in 2018-19. Staff is working on making recycling more available to apartments and working with the property management companies. The city needs to make sure the customers, have good service. There is room for increasing communication and collaboration within the software system.

REPORTS

City Council

Human Rights Commission – Lewis said the Latah County Human Rights breakfast will take place in the middle school at 9:30 a.m.

Mayor

No report.

ADJOURN

It was moved, seconded and mutually agreed upon to adjourn at 9:24 p.m.

_____

Arthur D. Bettge, Mayor

ATTEST:

_____

Laurie M. Hopkins, City Clerk

DRAFT

CITY COUNCIL STAFF REPORT

DATE: Monday, February 6, 2023

AGENDA ITEM TITLE

Approval of Memorandum of Understanding between the City of Moscow and the Idaho Transportation Department to establish a Car Seat Inspection Station - Capt. Roger Lanier / Officer Eric Warner

RESPONSIBLE STAFF	REVIEWED BY
James Fry, Police Chief	This was reviewed by the Administrative Committee on January 23, 2023 and recommended for approval.
ADDITIONAL PRESENTER(S)	**OTHER RESOURCES**

DESCRIPTION

The City of Moscow is entering into a Memorandum of Understanding (MOU) with the Idaho Transportation Department (ITD), Office of Highway Safety, Car Seat Program. The purpose of this MOU is to establish a car seat inspection station where parents and caregivers can learn how to keep children safe while training in passenger vehicles by using appropriate car seats, booster seats or seat belts correctly. This is accomplished through one-to-one instruction provided by nationally certified Child Passenger Safety technicians.

STAFF RECOMMENDATION

Approve of the Memorandum of Understanding between the City of Moscow and Idaho Transportation Department.

PROPOSED ACTIONS

ACTION: Approve of the Memorandum of Understanding between the City of Moscow and Idaho Transportation Department.

FISCAL IMPACT

In the past, Moscow Police applied for and managed the Car Seat Safety Grant. With this updated partnership, the department will save staff hours by continuing to provide excellent customer service to the citizenry without the laborious management of the grant. In addition, the Moscow Police Department will provide storage and support for car seat partners by hosting training sessions for area technicians in our training room; coordinating Idaho Transportation Department's attendance at the Newbill Safety Fair; and storing, transporting, and/or making the car seat trailer available for partners.

PERSONNEL IMPACT

Please see fiscal impact.

ATTACHMENTS

1. ITD Car Seat MOU 2023

IDAHO TRANSPORTATION DEPARTMENT
P.O. Box 7129 • Boise, ID 83707-1129
(208) 334-8000 • itd.idaho.gov

MEMORANDUM OF UNDERSTANDING
Between
THE IDAHO TRANSPORTATION DEPARTMENT ("ITD")
And
City of Moscow

PURPOSE:

To establish a partnership between the Idaho Transportation Department and the City of Moscow for the purpose of operating as a permanent Car Seat Inspection Station for the Idaho Child Passenger Safety Program.

AUTHORITY:

Per Idaho Code, Sections 67-2326 through 67-2333, ITD and the City of Moscow will cooperate to best serve the citizens of Idaho.

RESPONSIBILITIES AND PROCEDURES:

Per the National Highway Traffic Safety Administration ("NHTSA"), a Child Passenger Safety ("CPS") inspection station is a designated place where parents and caregivers can learn how to keep children safe while traveling in passenger vehicles by using the appropriate car seat, booster seat, or seat belt correctly. This is done through one-on-one instruction provided by nationally certified CPS technicians regarding the proper use and installation of car seats.

A Car Seat Inspection Station may assist parents and caregivers with:

- Selecting and using the correct car seat/booster seat for the age/size of their child;
- Installing the car seat or booster seat correctly in the vehicle;
- Harnessing the child in the car seat or booster seat correctly;
- Understanding when to transition child passengers to the next type of car seat as they grow; and
- Obtaining information and experience through guided instruction that will lead to self-sufficiency and confidence with keeping children safe in the future.

ITD agrees as follows:

- To provide educational resources and support to the City of Moscow for as long as it is a Car Seat Inspection Station;
- To provide the City of Moscow with an iPad (if needed) for use with the National Digital Check Form ("NDCF") on car seat checks;
- To supply the City of Moscow with car seats/booster seats to provide to families on a needs-basis; and
- To assist the City of Moscow in finding technicians to support seat check events hosted by the

City of Moscow;

The City of Moscow agrees as follows:

- To distribute car seats to families on a needs-basis;
- To report back to ITD the following information on a quarterly basis:
  - Number of seats checked;
  - Number/types of car seats distributed; and
  - Educational resources provided to caregivers.
- To use the iPad (if accepted) ONLY for the NDCF and to report to ITD any loss or damage to the device immediately. The City of Moscow may be liable for the replacement cost of the device.
- To promote the program on the City of Moscow's website and/or in other resources and to identify the City of Moscow's technician(s).
- Conduct no less than one community seat check event each year.

LIMITATIONS:

Nothing in this Memorandum of Understanding ("MOU") between ITD and the City of Moscow shall be construed as limiting or expanding the statutory or regulatory responsibilities of any involved individual in performing functions granted to them by law; or as requiring either entity to expend any sum in excess of its respective appropriation. Each and every provision of this MOU is subject to the laws and regulations of the state of Idaho and of the United States.

Nothing in this MOU shall be construed as expanding the liability of either party. In the event of a liability claim, each party shall defend their own interests. Neither party shall be required to provide indemnification of the other party.

EFFECTIVE DATE:

This MOU shall become effective upon signature of the Director of ITD <u>or delegate</u> and the signing authority of the City of Moscow, whichever is most recent.

METHOD OF TERMINATION:

This MOU shall remain in force unless formally terminated by either party after thirty (30) days written notice to the other party or the Car Seat Inspection Station is no longer active.

AMENDMENTS:

Amendments to this MOU shall become effective upon mutual agreement and written approval by the Director of ITD <u>or delegate</u> and the signing authority of the City of Moscow.

SIGNATURES:

IDAHO TRANSPORTATION DEPARTMENT

By: _____ Date: _____

Director or delegate

CITY OF MOSCOW (NAME OF AGENCY)

By: _____ Date: _____

Title: _____

CITY COUNCIL STAFF REPORT

DATE: Monday, February 6, 2023

AGENDA ITEM TITLE

Proposed Lot Division generally located southwest of the West Palouse River Drive Ball Fields Property and southwest of the University of Idaho Arboretum – Aimee Hennrich

RESPONSIBLE STAFF	REVIEWED BY
Aimee Hennrich, Planner I	Public Works and Finance
ADDITIONAL PRESENTER(S)	**OTHER RESOURCES**

DESCRIPTION

The applicant, BBC LLC, is requesting a lot division to create four lots of approximately 23,075 sf (.53 acres), 46,362 sf (1.06 acres), 72,306 sf (1.66 acres), and 457,537 sf (10.50 acres) in size from an existing parcel of 599,277 sf (13.76 acres) in size. The property is generally located southwest of the West Palouse River Drive Ball Fields Property and southwest of the University of Idaho Arboretum and was annexed and rezoned in 2022 to the Residential Office (RO) and Medium Density Residential (R-3) Zoning Districts. The 10.50-acre portion of the subject property that is Zoned R-3 is where the Edington Estates PUD and Preliminary Plat was approved in 2022. Edington Estates will still need to receive final plat and PUD approval before the subdivision will be finalized. The intention of the proposed lot division is to separate the Residential Office (RO) Zoned portion from the Medium Density (R-3) Zoned portion of the property, and also divide the RO area into three (3) lots. All proposed lots meet the minimum lot area and frontage requirements of their respective zoning designations. This item was reviewed and recommended for approval by the Public Works and Finance Committee on January 23, 2023.

STAFF RECOMMENDATION

Approve the lot division request with no conditions.

PROPOSED ACTIONS

ACTION: Approve the lot division request with no conditions.

FISCAL IMPACT

PERSONNEL IMPACT

ATTACHMENTS

1. Application Materials.1
2. NPM LUP2022-0035 - Edington Estates LD - PWF 01-23-23

405 SE Brelsford DR, Ste C
Pullman, WA, 99163
509-339-6187

December 16, 2022

Mayor Art Bettge & City Council
206 E. 3rd Street
Moscow, ID 83843

Dear Mayor Bettge & City Council,

On behalf of BBC LLC, I would like to request the Lot Division of the recently annexed Edington Estates and Edington Residential Office property to create three individual Residential Office lots along Augustine Avenue, as well as create the parcel that is the Edington Estates Planned Unit Development. The intention of the lot division is to support the residential development in the area and separate the Residential Office zoned properties from the Residential zoned Planned Unit Development properties.

Included in the application packet you will find the required Site Plan, Lot Division Plat, and Legal Description of the property. Please feel free to reach out to myself or BBC LLC if you have any questions or concerns regarding the property or the project.

Thank you,

Scott Sumner
Principal
SynTier Engineering

Received 12-16-2022

THAT PORTION OF A PARCEL OF LAND DESCRIBED IN WARRANTY DEED RECORDED AS INSTRUMENT NO. 620198, RECORDS OF LATAH COUNTY, SITUATE IN GOVERNMENT LOTS 1 AND 2, AND THE EAST HALF OF THE NORTHWEST QUARTER OF SECTION 19, TOWNSHIP 39 NORTH, RANGE 5 WEST, BOISE MERIDIAN, LATAH COUNTY, STATE OF IDAHO, MORE PARTICULARLY DESCRIBED AS FOLLOWS:

COMMENCING AT THE NORTHWEST CORNER OF SAID SECTION 19, SAID POINT BEING SOUTH 87°09'26" WEST A DISTANCE OF 2700.96 FEET FROM THE NORTH QUARTER CORNER OF SAID SECTION 19;

THENCE ALONG THE WEST LINE OF SAID SECTION 19 SOUTH 00°04'50" EAST A DISTANCE OF 532.48 FEET TO THE **POINT OF BEGINNING**:

THENCE ALONG THE WESTERLY RIGHT OF WAY LINE OF AUGUSTINE AVENUE SOUTH 38°33'29" EAST A DISTANCE OF 145.44 FEET;

THENCE CONTINUING ALONG THE WESTERLY RIGHT OF WAY LINE OF AUGUSTINE AVENUE SOUTH 42°59'48" EAST A DISTANCE OF 536.43 FEET TO THE END OF SAID RIGHT OF WAY LINE;

THENCE SOUTH 42°59'48" EAST A DISTANCE OF 154.47 FEET;

THENCE SOUTH 21°01'42" EAST A DISTANCE OF 349.08 FEET;

THENCE SOUTH 31°02'30" WEST A DISTANCE OF 467.38 FEET;

THENCE SOUTH 89°53'16" WEST A DISTANCE OF 444.18 FEET TO A POINT ON THE WEST LINE OF SAID SECTION 19;

THENCE ALONG SAID WEST LINE NORTH 00°04'50" WEST A DISTANCE OF 1346.20 FEET TO THE POINT OF BEGINNING.

CONTAINING: 599,277 SQUARE FEET OR 13.76 ACRES OF LAND, MORE OR LESS.

PREPARED BY SYNTIER ENGINEERING.

Received 12-16-2022

EDINGTON COMMERCIAL LOT DIVISION

NORTHWEST QUARTER OF THE NORTHWEST QUARTER OF SECTION 19, TOWNSHIP 39 NORTH, RANGE 5 WEST, B.M. LATAH COUNTY, STATE OF IDAHO

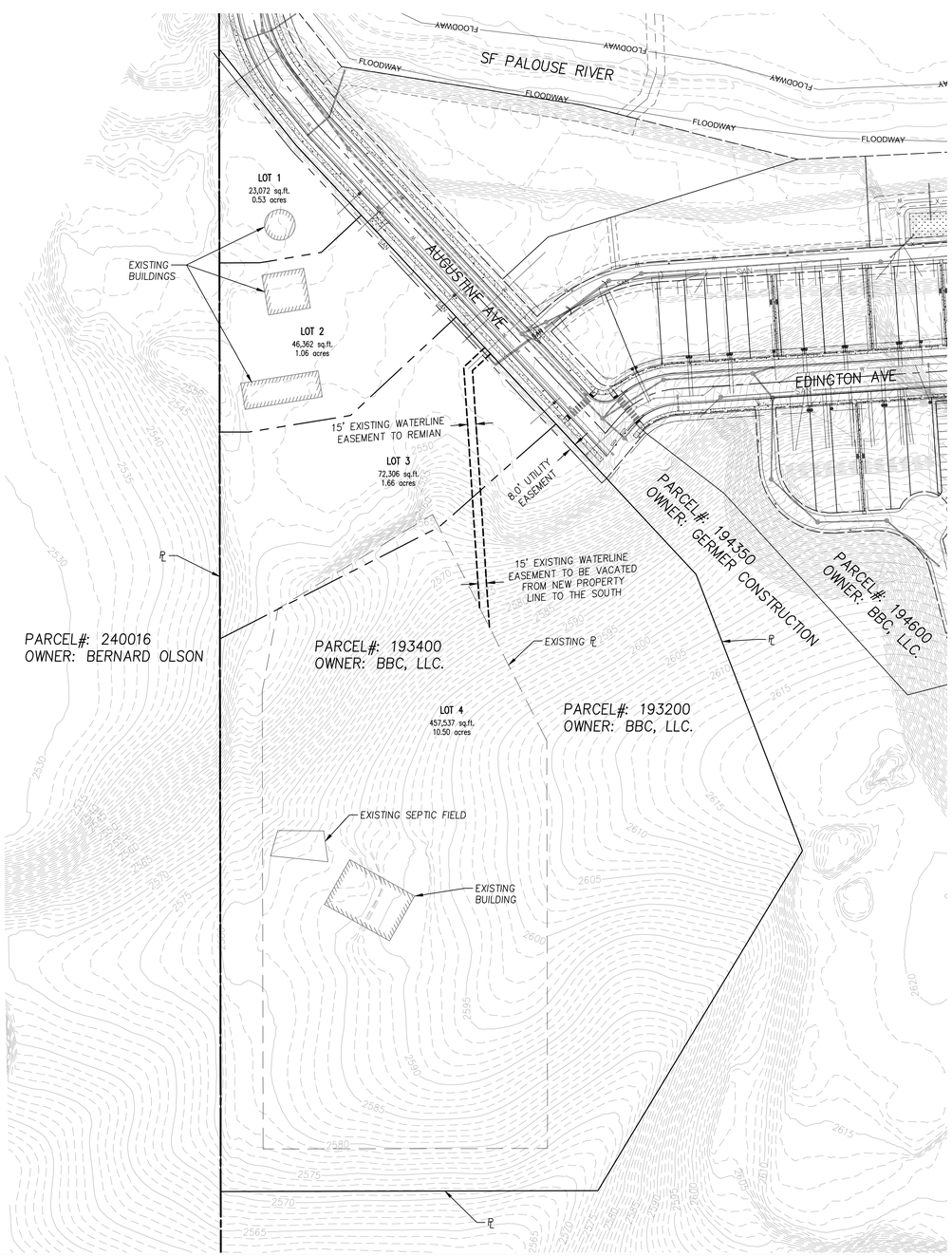

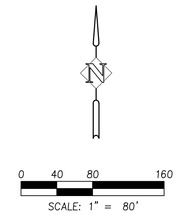

OWNER

BBC LLC
ATTN: RICH BEEBE
4930 LENVILLE RD.
MOSCOW, ID 83843

LAND AREAS

GROSS LAND: 13.76 ACRES
NET LOTS: 13.76 ACRES

SITE ADDRESS

AUGUSTINE AVENUE
MOSCOW, ID 83843

LAND USE

AG FORESTRY

LAND SURVEYOR

SYNTIER ENGINEERING, INC
JASON VON LINDERN, PLS

ENGINEER

SYNTIER ENGINEERING, INC
ATTN: SCOTT SUMNER, P.E.
405 SE BRELSFORD DRIVE, STE C
PULLMAN, WA 99163
TEL: 509.339.6187
CELL: 208.596.7912
EMAIL: SCOTT@SYNTIERENGR.COM

FLOOD PLAIN DESIGNATION

AREA WITHIN LATAH COUNTY FEMA BOUNDARY
FLOOD ZONE C
PANEL NUMBER 160086 0330 D
PANEL 330 OF 475

SITE IMPROVEMENT NOTES:

- CURB, DRIVEWAYS, AND MARKING AREAS WILL BE CONSTRUCTED AT TIME OF DEVELOPMENT.
- STUBS TO EACH PROPERTY FOR SITE UTILITIES WILL BE INSTALLED WITH EDINGTON ADDITION.
- LOT 4 HAS AN APPROVED PRELIMINARY PLAT, SHOWING UTILITY CONNECTION AND ACCESS.

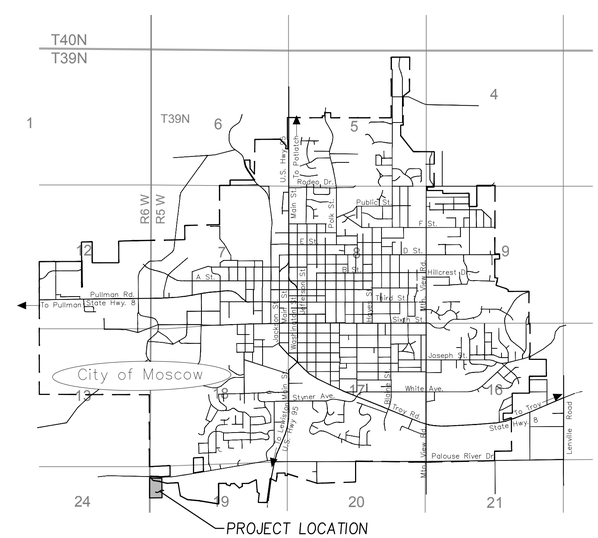

VICINITY MAP

FOR REVIEW ONLY
NOT FOR CONSTRUCTION

SITE PLAN
EDINGTON COMMERCIAL LOT DIVISION
MOSCOW, ID

SYNTIER Engineering, Inc.
405 SE Brelsford Drive, Suite C Pullman, WA 99163
www.SynTierEngr.com 509.339.6187

PROFESSIONAL ENGINEER LICENSED STATE OF IDAHO SCOTT A SUMNER
PRELIMINARY

DESIGNED:	SAS
DRAWN:	SAS
CHECKED:	SAS
DATE:	DEC 13, 2022

NO.	DESCRIPTION
	REVISIONS

SHEET NO.
C1.0
1 OF 1
JOB NO.
BBC-03

P:\BBC-03 (MB Rezone & Shortplat)\BBC03-DWGS\Sheets\ BBC03-C1.0-COVERSHEET.dwg

Received 12-16-2022

EDINGTON ESTATES RO LOT DIVISION

NORTHWEST QUARTER OF SECTION 19, TOWNSHIP 39 NORTH, RANGE 5 WEST, BOISE MERIDIAN
LATAH COUNTY, IDAHO

DEDICATION:

KNOW ALL MEN BY THESE PRESENTS: THAT BBC, LLC., AN IDAHO LIMITED LIABILITY COMPANY, OWNER IN FEE SIMPLE, HAVE WITH THEIR FREE CONSENT AND IN ACCORDANCE WITH THEIR DESIRES CAUSED THE LAND HEREIN DESCRIBED TO BE SUBDIVIDED AND PLATTED AS EDINGTON ESTATES RO LOT DIVISION AND DESCRIBED AS FOLLOWS:

THAT PORTION OF A PARCEL OF LAND DESCRIBED IN WARRANTY DEED RECORDED AS INSTRUMENT NO. 620198, RECORDS OF LATAH COUNTY, SITUATE IN GOVERNMENT LOTS 1 AND 2, AND THE EAST HALF OF THE NORTHWEST QUARTER OF SECTION 19, TOWNSHIP 39 NORTH, RANGE 5 WEST, BOISE MERIDIAN, LATAH COUNTY, STATE OF IDAHO, MORE PARTICULARLY DESCRIBED AS FOLLOWS:

COMMENCING AT THE NORTHWEST CORNER OF SAID SECTION 19, SAID POINT BEING SOUTH 87°09'26" WEST A DISTANCE OF 2700.96 FEET FROM THE NORTH QUARTER CORNER OF SAID SECTION 19, THENCE ALONG THE WEST LINE OF SAID SECTION 19 SOUTH 00°04'50" EAST A DISTANCE OF 532.48 FEET TO THE **POINT OF BEGINNING:**

THENCE ALONG THE WESTERLY RIGHT OF WAY LINE OF AUGUSTINE AVENUE SOUTH 38°33'29" EAST A DISTANCE OF 145.44 FEET;

THENCE CONTINUING ALONG THE WESTERLY RIGHT OF WAY LINE OF AUGUSTINE AVENUE SOUTH 42°59'48" EAST A DISTANCE OF 536.43 FEET TO THE END OF SAID RIGHT OF WAY LINE;

THENCE SOUTH 42°59'48" EAST A DISTANCE OF 154.47 FEET;

THENCE SOUTH 21°01'42" EAST A DISTANCE OF 349.08 FEET;

THENCE SOUTH 31°02'30" WEST A DISTANCE OF 467.38 FEET;

THENCE SOUTH 89°53'16" WEST A DISTANCE OF 444.18 FEET TO A POINT ON THE WEST LINE OF SAID SECTION 19;

THENCE ALONG SAID WEST LINE NORTH 00°04'50" WEST A DISTANCE OF 1346.20 FEET TO THE **POINT OF BEGINNING.**

CONTAINING: 599,277 SQUARE FEET OR 13.76 ACRES OF LAND, MORE OR LESS.

IN WITNESS WHEREOF WE HAVE SET OUR HANDS THIS ___ DAY OF _____, 2023.

BY: _____
ANDREW CRAPUCHETTES, GOVERNOR OF BBC, LLC

ACKNOWLEDGMENTS:

STATE OF IDAHO)
) S.S.
COUNTY OF LATAH)

ON THIS _____DAY OF _____, 2023, BEFORE THE UNDERSIGNED, A NOTARY PUBLIC IN AND FOR THE AFORESAID STATE, PERSONALLY APPEARED BEFORE ME ANDREW CRAPUCHETTES, GOVERNOR OF BBC, LLC, AN IDAHO LIMITED LIABILITY PARTNERSHIP, THE COMPANY THAT EXECUTED THE WITHIN AND FOREGOING INSTRUMENT; WHO ACKNOWLEDGED SAID EXECUTION TO BE THE FREE AND VOLUNTARY ACT OF SAID COMPANY FOR THE PURPOSES MENTIONED THEREIN AND STATED ON OATH THAT HE IS AUTHORIZED TO EXECUTE SAID INSTRUMENT AND THE SEAL AFFIXED (IF ANY) IS THE COMPANY SEAL OF SAID COMPANY.

_____
SIGNED NOTARY PUBLIC IN AND FOR THE STATE OF

_____
PRINTED NOTARY PUBLIC IN AND FOR THE STATE OF

MY COMMISSION EXPIRES _____

COUNTY RECORDER CERTIFICATE:

STATE OF IDAHO, COUNTY OF LATAH
RECORDED AT THE REQUEST OF _____
AT _____M. THIS _____ DAY OF _____
_____
RECORDER TONYA DODGE
DEPUTY _____

APPROVALS

EXAMINED AND APPROVED BY THE LATAH COUNTY SURVEYOR THIS _____ DAY OF _____, 2023.

_____
LATAH COUNTY SURVEYOR

I HEREBY CERTIFY THAT TAXES AND ASSESSMENTS ON PROPERTY SHOWN HEREON HAVE BEEN PAID FOR ____ AND PRECEDING YEARS AS OF THIS ___ DAY OF _____, 2023.

_____
LATAH COUNTY TREASURER

OWNER'S CONTACT INFORMATION

NAME: ANDREW CRAPUCHETTES
ADDRESS: 4930 LENVILLE RD.
MOSCOW, ID 83843

SURVEYOR'S CONTACT INFORMATION

NAME: JASON VONLINDERN, PLS
ADDRESS: 405 SE BRELSFORD DRIVE, SUITE C
PULLMAN, WA 99163
EMAIL: WWW.SYNTIERENGR.COM
PHONE: 509.339.6187

SURVEYOR'S CERTIFICATE:

I, JASON MICHAEL VONLINDERN, PLS 19293, HEREBY CERTIFY THAT THE ABOVE PLATTED AND DESCRIBED PROPERTY REPRESENTS A SURVEY BY ME OR UNDER MY SUPERVISION IN ACCORDANCE WITH THE LAWS OF THE STATE OF IDAHO, AND THAT THE STREETS, LOTS, DISTANCES, AND MONUMENTS HAVE BEEN MEASURED AND LOCATED AS SHOWN THEREON. WITNESS MY HAND AND SEAL THIS THE ____ DAY OF _____, 2023.

_____
JASON MICHAEL VONLINDERN, PLS 19293 DATE

PROFESSIONAL LAND SURVEYOR
LICENSED
19293
STATE OF IDAHO
JASON VONLINDERN

PRELIMINARY

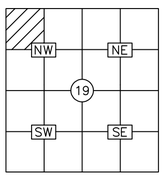

S.19, T.39N., R.5W.

	By	Date
Surveyed	SYN	03/2022
Drawn	SAS	12/2022
Checked	JMV	12/2022
Approved		
Accepted		

Scale:
Date: Nov. 29, 22
Drawing Name BBC03-SP.DWG
Sheet 1 of 4

SYNTIER Engineering, Inc.
405 SE Brelsford Drive, Suite C
Pullman, WA 99163
www.SynTierEngr.com 509.339.6187

For:
BBC LLC

EDINGTON ESTATES RO LOT DIVISION
NORTHWEST QUARTER OF SECTION 19,
TOWNSHIP 39 NORTH, RANGE 5 WEST, BOISE MERIDIAN
MOSCOW, IDAHO

Received 12-16-2022

EDINGTON ESTATES RO LOT DIVISION

NORTHWEST QUARTER OF SECTION 19, TOWNSHIP 39 NORTH, RANGE 5 WEST, BOISE MERIDIAN
LATAH COUNTY, IDAHO

OFFICIAL DOCUMENTS:

R1 WARRANTY DEED INSTRUMENT NUMBER 616561, GRANTOR: A&E, LLC., GRANTEE: BBC, LLC., 07/14/2021
R2 UNITED STATE GOVERNMENT LAND OFFICE PLAT OF TOWNSHIP 39 NORTH, RANGE 5 WEST, B.M., ACCEPTED:12/14/1871, SURVEYOR: MELDRUM
R3A CPFR INSTRUMENT NO. 288896 QUARTER CORNER, SECTIONS 18/19, AUG 1977, SURVEYOR: SMITH
R3B CPFR INSTRUMENT NO. 396329 COMMON CORNER, SECTIONS 13, 19, 18, 24, MAY 1993, SURVEYOR: TAGGART
R3C CPFR INSTRUMENT NO. 401996 QUARTER CORNER, SECTIONS 25/30, JAN 1994, SURVEYOR: HODGE
R3D CPFR INSTRUMENT NO. 428387 COMMON CORNER, SECTIONS 24, 19, 25, 30, JUL 1997, SURVEYOR: HODGE
R3E CPFR INSTRUMENT NO. 617935 QUARTER CORNER, SECTIONS 24, 19, AUG 2021, SURVEYOR: VONLINDERN
R4 SURVEY FOR: DEVELOPERS OF THE PALOUSE, INSTRUMENT NO. 524459, 8/21/2008, SURVEYOR: HODGE
R5 SURVEY FOR: SHERM CLYDE/CITY OF MOSCOW, INSTRUMENT NO. 453080, 10/05/2000, SURVEYOR: HODGE
R6 WARRANTY DEED INSTRUMENT NO. 610270, GRANTOR: LEADORE LAND PARTNERS, LLP., GRANTEE: A&E, LLC., 11/16/2020
R7 SURVEY FOR BBC, LLC, INSTRUMENT NO. 617995, SEPT. 2021, SURVEYOR: VONLINDERN
R8 SURVEY FOR SHERMAN CLYDE, INSTRUMENT NO. 429121, AUG. 1997, SURVEYOR: HODGE
R9 WARRANTY DEED INSTRUMENT NUMBER 620198, GRANTOR: CLYDE, TIMOTHY & LISA H, GRANTEE: BBC, LLC., 12/21/2021
R10 EDINGTON ADDITION, INSTRUMENT NUMBER 627104, DEC. 2022, SURVEYOR: VONLINDERN

CORNER NOTES:

F1 FOUND 3" ALUMINUM CAP IN CONCRETE COLLAR MARKED "13, 24, 18, 19", ±1.5' BELOW GRADE, PER R3B
F2 FOUND 3-1/2" ALUMINUM CAP MARKED "T39N R5W 18|19 LS 2058" IN A MONUMENT CASE PER R3A
F3 FOUND 3-1/2" BRASS CAP MARKED "T39N R5W BM 1/4 19|30 1994 PE/LS 3003", PER R3C
F4 FOUND QUARTZ STONE AND REFERENCES PER R3D, PROTRUDING ±0.2' ABOVE GRADE
F5 FOUND 3" ALUMINUM CAP MARKED "T39N R5W BM 1/4 19|24 2021 LS 19293, PER R3E
F6 FOUND 5/8" REBAR WITH YELLOW PLASTIC CAP MARKED "VONLINDERN PLS 19293"
F7 FOUND 5/8" REBAR, NO CAP
F8 FOUND 5/8" REBAR WITH YELLOW PLASTIC CAP MARKED "HODGE 3003"
F9 FOUND 5/8" REBAR WITH YELLOW PLASTIC CAP MARKED "HODGE 3003"
F10 FOUND 5/8" REBAR WITH YELLOW PLASTIC CAP MARKED "HODGE 3003"
F11 FOUND 5/8" REBAR WITH YELLOW PLASTIC CAP MARKED "HODGE 3003"
F12 FOUND 5/8" REBAR WITH YELLOW PLASTIC CAP MARKED "HODGE 3003"
F13 FOUND 5/8" REBAR WITH YELLOW PLASTIC CAP MARKED "HODGE 3003"

SURVEYORS NARRATIVE:

1. WE ACCEPTED THE MONUMENTS F1-F4 AS THE SECTION CORNERS CONTROLLING THE WEST HALF OF SECTION 19.
2. WE HELD FOUND MONUMENTS FROM R7 TO DEVELOP THE BOUNDARY OF THE SUBJECT PARCEL.

BASIS OF BEARING:

THE BEARING OF SOUTH 00°04'50" EAST 5273.00 FEET WAS ASSUMED ALONG THE WEST LINE OF SECTION 19, TOWNSHIP 39 NORTH, RANGE 5 WEST, BOISE MERIDIAN, BETWEEN CORNERS F1 AND F4, PER GNSS OBSERVATIONS USING IDAHO STATE PLANE WEST ZONE, SCALED TO GROUND.

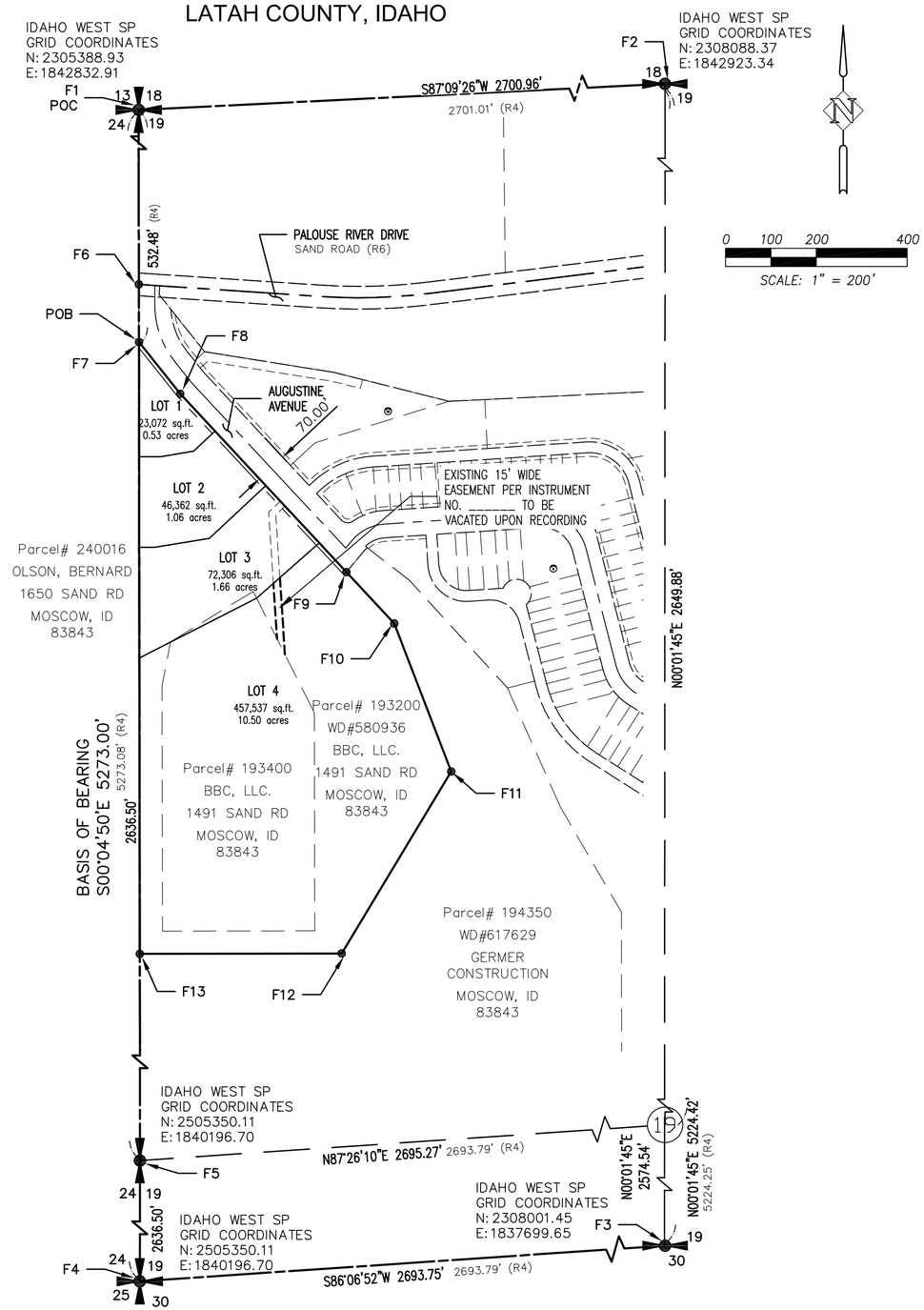

LEGEND:

PLAT BOUNDARY LINE
SECTION LINE
1/4 SECTION LINE
PROPOSED CENTERLINE
PROPOSED RIGHT OF WAY LINE
PROPOSED LOT LINE
PROPOSED EASEMENT LINE
EXISTING CENTERLINE
EXISTING RIGHT OF WAY LINE
EXISTING LOT LINE
EXISTING EASEMENT LINE
EXISTING EASEMENT LINE TO BE VACATED BY AND UPON THE RECORDING OF THIS PLAT
SECTION CORNER AS NOTED
1/4 SECTION CORNER AS NOTED
19 CENTER OF SECTION
F1 FOUND MONUMENT SEE CORNER NOTES
SET 5/8" REBAR WITH OPC MARKED "VONLINDERN, PLS 19293"
SET 5/8" REBAR WITH YPC MARKED "VONLINDERN, PLS 19293" IN CITY OF MOSCOW MONUMENT CASE
(R1) RECORD INFORMATION SEE OFFICIAL DOCUMENTS
POB POINT OF BEGINNING
POC POINT OF COMMENCEMENT

PROFESSIONAL LAND SURVEYOR LICENSED STATE OF IDAHO JASON VONLINDERN
PRELIMINARY

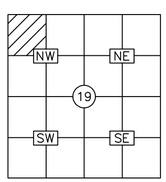

S.19, T.39N., R.5W.

	By	Date
Surveyed	SYN	03/2022
Drawn	SAS	12/2022
Checked	JMV	12/2022
Approved		
Accepted		

Scale: 1" = 200'
Date: Nov. 29, 22
Drawing Name BBC03-SP.DWG
Sheet 2 of 4

SYNTIER Engineering, Inc.
405 SE Brelsford Drive, Suite C
Pullman, WA 99163
www.SynTierEngr.com 509.339.6187

For:
BBC LLC

EDINGTON ESTATES RO LOT DIVISION
NORTHWEST QUARTER OF SECTION 19,
TOWNSHIP 39 NORTH, RANGE 5 WEST, BOISE MERIDIAN
MOSCOW, IDAHO

Received 12-16-2022

EDINGTON ESTATES RO LOT DIVISION

NORTHWEST QUARTER OF SECTION 19, TOWNSHIP 39 NORTH, RANGE 5 WEST, BOISE MERIDIAN
LATAH COUNTY, IDAHO

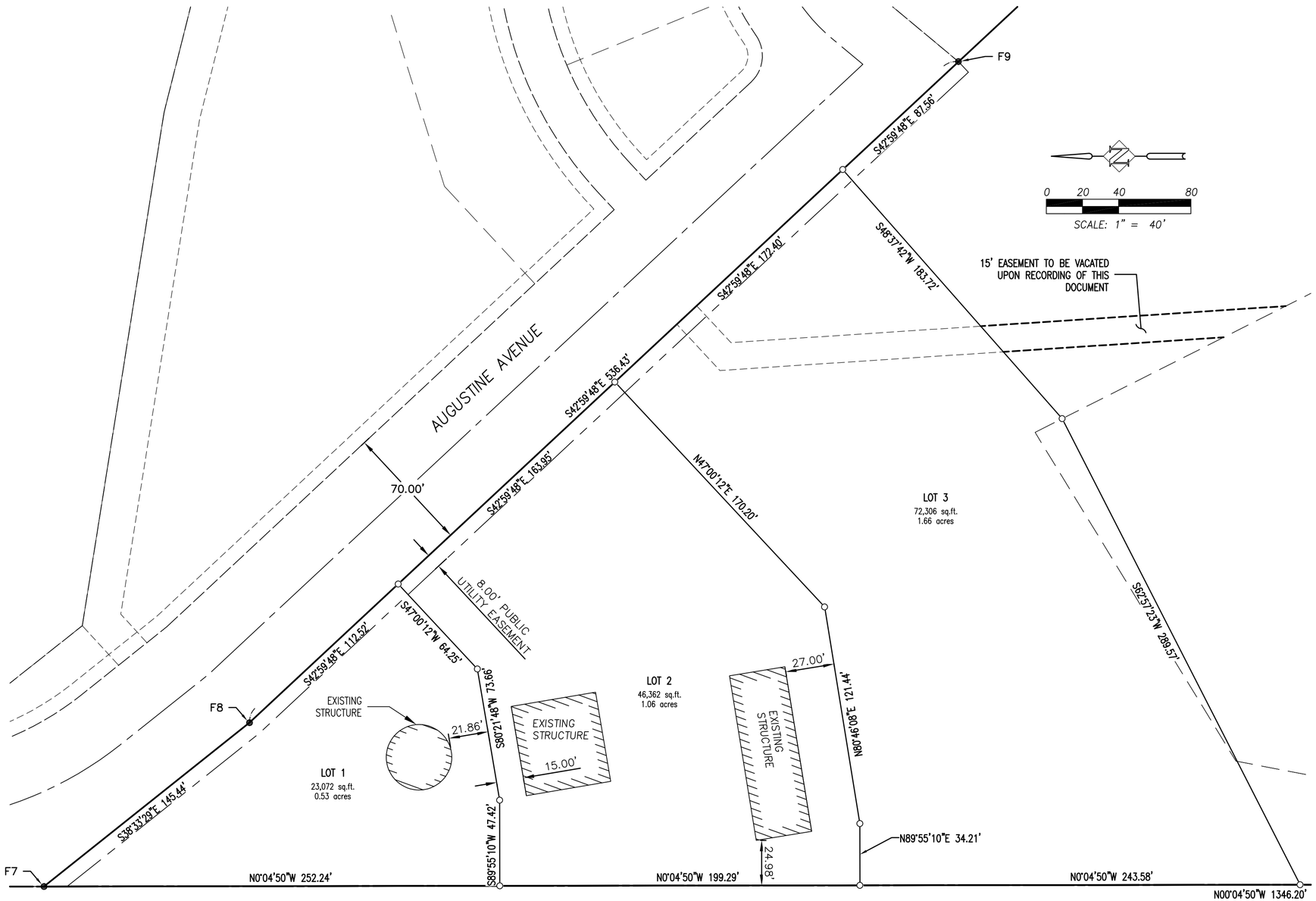

LEGEND:

- PLAT BOUNDARY LINE
- SECTION LINE
- 1/4 SECTION LINE
- PROPOSED LOT LINE
- PROPOSED EASEMENT LINE
- EXISTING CENTERLINE
- EXISTING RIGHT OF WAY LINE
- EXISTING LOT LINE
- EXISTING EASEMENT LINE
- EXISTING EASEMENT LINE TO BE VACATED BY AND UPON THE RECORDING OF THIS PLAT
- SECTION CORNER AS NOTED
- 1/4 SECTION CORNER AS NOTED
- (19) CENTER OF SECTION
- F1 FOUND MONUMENT SEE CORNER NOTES
- ○ SET 5/8" REBAR WITH OPC MARKED "VONLINDERN, PLS 19293"
- (R1) RECORD INFORMATION SEE OFFICIAL DOCUMENTS
- POB POINT OF BEGINNING
- POC POINT OF COMMENCEMENT

PROFESSIONAL LAND SURVEYOR LICENSED STATE OF IDAHO JASON VONLINDERN

PRELIMINARY

	By	Date
Surveyed	SYN	03/2022
Drawn	SAS	12/2022
Checked	JMV	12/2022
Approved		
Accepted		

Scale: 1" = 40'
Date: Nov. 29, 22
Drawing Name BBC03-SP.DWG
Sheet 3 of 4

SYNTIER Engineering, Inc.
405 SE Brelsford Drive, Suite C
Pullman, WA 99163
www.SynTierEngr.com 509.339.6187

For:
BBC LLC

EDINGTON ESTATES RO LOT DIVISION
NORTHWEST QUARTER OF SECTION 19,
TOWNSHIP 39 NORTH, RANGE 5 WEST, BOISE MERIDIAN
MOSCOW, IDAHO

Received 12-16-2022

EDINGTON ESTATES RO LOT DIVISION

NORTHWEST QUARTER OF SECTION 19, TOWNSHIP 39 NORTH, RANGE 5 WEST, BOISE MERIDIAN
LATAH COUNTY, IDAHO

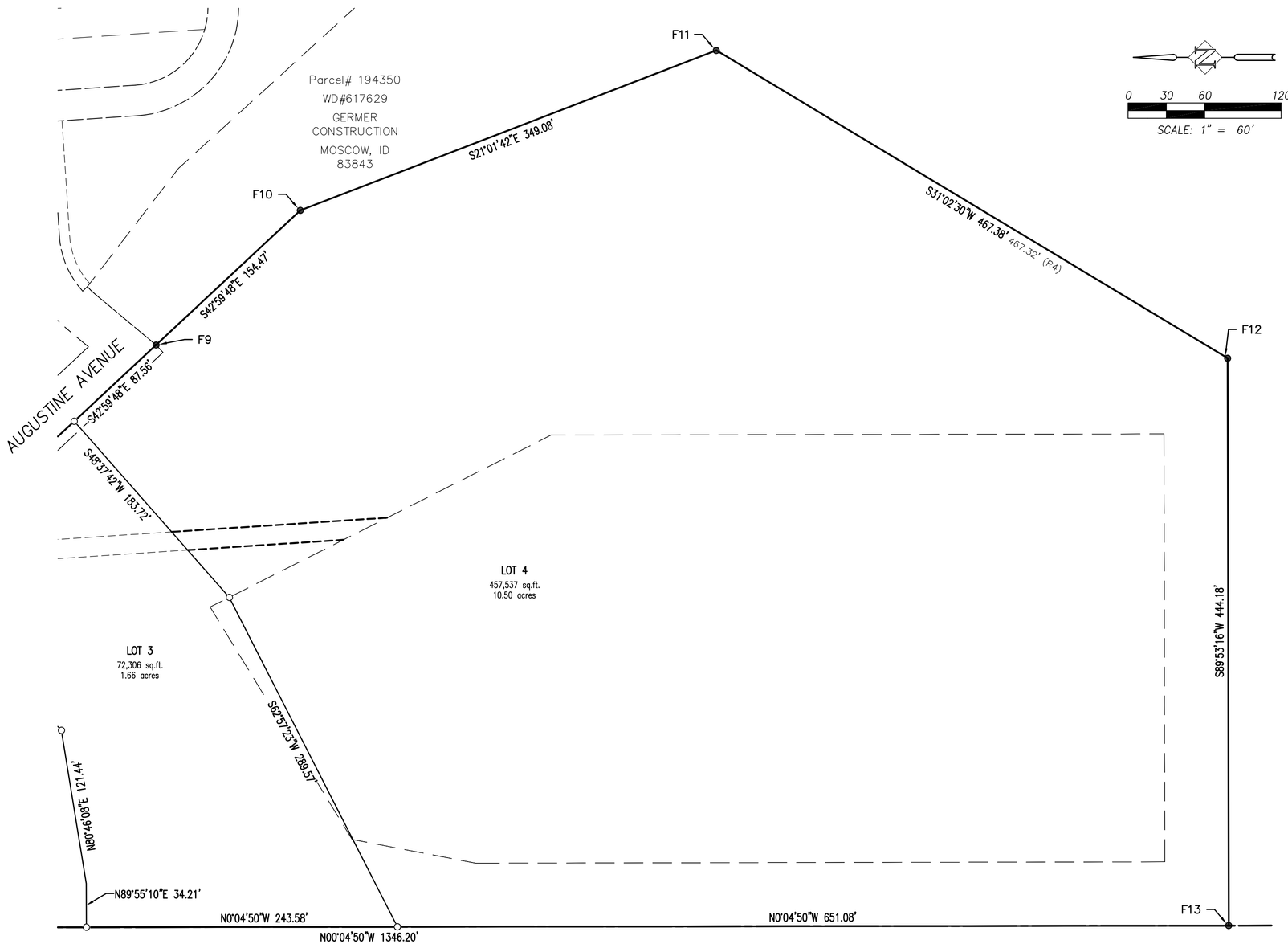

LEGEND:

- PLAT BOUNDARY LINE
- SECTION LINE
- 1/4 SECTION LINE
- PROPOSED LOT LINE
- PROPOSED EASEMENT LINE
- EXISTING CENTERLINE
- EXISTING RIGHT OF WAY LINE
- EXISTING LOT LINE
- EXISTING EASEMENT LINE
- EXISTING EASEMENT LINE TO BE VACATED BY AND UPON THE RECORDING OF THIS PLAT
- SECTION CORNER AS NOTED
- 1/4 SECTION CORNER AS NOTED
- (19) CENTER OF SECTION
- F1 FOUND MONUMENT SEE CORNER NOTES
- SET 5/8" REBAR WITH OPC MARKED "VONLINDERN, PLS 19293"
- (R1) RECORD INFORMATION SEE OFFICIAL DOCUMENTS
- POB POINT OF BEGINNING
- POC POINT OF COMMENCEMENT

PROFESSIONAL LAND SURVEYOR LICENSED STATE OF IDAHO JASON VONLINDERN 19293

PRELIMINARY

	By	Date
Surveyed	SYN	03/2022
Drawn	SAS	12/2022
Checked	JMV	12/2022
Approved		
Accepted		

Scale: 1" = 60'
Date: Nov. 29, 22
Drawing Name BBC03-SP.DWG
Sheet 4 of 4

SYNTIER Engineering, Inc.
405 SE Brelsford Drive, Suite C
Pullman, WA 99163
www.SynTierEngr.com 509.339.6187

For:
BBC LLC

EDINGTON ESTATES RO LOT DIVISION
NORTHWEST QUARTER OF SECTION 19,
TOWNSHIP 39 NORTH, RANGE 5 WEST, BOISE MERIDIAN
MOSCOW, IDAHO

Received 12-16-2022

LOT 1

THAT PORTION OF A PARCEL OF LAND DESCRIBED IN WARRANTY DEED RECORDED AS INSTRUMENT NO. 620198, RECORDS OF LATAH COUNTY, SITUATE IN GOVERNMENT LOTS 1 AND 2, AND THE EAST HALF OF THE NORTHWEST QUARTER OF SECTION 19, TOWNSHIP 39 NORTH, RANGE 5 WEST, BOISE MERIDIAN, LATAH COUNTY, STATE OF IDAHO, MORE PARTICULARLY DESCRIBED AS FOLLOWS:

COMMENCING AT THE NORTHWEST CORNER OF SAID SECTION 19, SAID POINT BEING SOUTH 87°09'26" WEST A DISTANCE OF 2700.96 FEET FROM THE NORTH QUARTER CORNER OF SAID SECTION 19;

THENCE ALONG THE WEST LINE OF SAID SECTION 19 SOUTH 00°04'50" EAST A DISTANCE OF 532.48 FEET TO THE **POINT OF BEGINNING**:

THENCE ALONG THE WESTERLY RIGHT OF WAY LINE OF AUGUSTINE AVENUE SOUTH 38°33'29" EAST A DISTANCE OF 145.44 FEET;

THENCE CONTINUING ALONG THE WESTERLY RIGHT OF WAY LINE SOUTH 42°59'48" EAST A DISTANCE OF 112.52 FEET;

THENCE LEAVING SAID WESTERLY RIGHT OF WAY LINE SOUTH 47°00'12" WEST A DISTANCE OF 64.25 FEET;

THENCE SOUTH 80°21'48" WEST A DISTANCE OF 73.66 FEET;

THENCE SOUTH 89°55'10" WEST A DISTANCE OF 47.42 FEET TO A POINT ON THE WEST LINE OF SAID SECTION 19;

THENCE ALONG SAID WEST LINE NORTH 00°04'50" WEST A DISTANCE OF 252.24 FEET TO THE **POINT OF BEGINNING**.

CONTAINING: 23,072 SQUARE FEET OR 0.53 ACRES OF LAND, MORE OR LESS.

PREPARED BY SYNTIER ENGINEERING.

Received 12-16-2022

LOT 2

THAT PORTION OF A PARCEL OF LAND DESCRIBED IN WARRANTY DEED RECORDED AS INSTRUMENT NO. 620198, RECORDS OF LATAH COUNTY, SITUATE IN GOVERNMENT LOTS 1 AND 2, AND THE EAST HALF OF THE NORTHWEST QUARTER OF SECTION 19, TOWNSHIP 39 NORTH, RANGE 5 WEST, BOISE MERIDIAN, LATAH COUNTY, STATE OF IDAHO, MORE PARTICULARLY DESCRIBED AS FOLLOWS:

COMMENCING AT THE NORTHWEST CORNER OF SAID SECTION 19, SAID POINT BEING SOUTH 87°09'26" WEST A DISTANCE OF 2700.96 FEET FROM THE NORTH QUARTER CORNER OF SAID SECTION 19;

THENCE ALONG THE WEST LINE OF SAID SECTION 19 SOUTH 00°04'50" EAST A DISTANCE OF 532.48 FEET TO A POINT ON THE WESTERLY LINE OF AUGUSTINE AVENUE;

THENCE ALONG SAID WESTERLY RIGHT OF WAY LINE SOUTH 38°33'29" EAST A DISTANCE OF 145.44 FEET;

THENCE CONTINUING ALONG SAID WESTERLY RIGHT OF WAY LINE SOUTH 42°59'48" EAST A DISTANCE OF 112.52 FEET TO THE **POINT OF BEGINNING**:

THENCE CONTINUING ALONG SAID WESTERLY RIGHT OF WAY LINE SOUTH 42°59'48" EAST A DISTANCE OF 163.95 FEET;

THENCE LEAVING SAID RIGHT OF WAY LINE SOUTH 47°00'12" WEST A DISTANCE OF 170.20 FEET;

THENCE SOUTH 80°46'08" WEST A DISTANCE OF 121.44 FEET;

THENCE SOUTH 89°55'10" WEST A DISTANCE OF 34.21 FEET TO A POINT ON THE WEST LINE OF SAID SECTION 19;

THENCE ALONG SAID WEST LINE NORTH 00°04'50" WEST A DISTANCE OF 199.29 FEET

THENCE LEAVING SAID WEST LINE NORTH 89°55'10" EAST A DISTANCE OF 47.42 FEET TO A POINT ON THE WEST LINE OF SAID SECTION 19;

THENCE NORTH 80°21'48" EAST A DISTANCE OF 73.66 FEET;

THENCE NORTH 47°00'12" EAST A DISTANCE OF 64.25 FEET TO THE **POINT OF BEGINNING**.

CONTAINING: 46,362 SQUARE FEET OR 1.06 ACRES OF LAND, MORE OR LESS.

PREPARED BY SYNTIER ENGINEERING.

Received 12-16-2022

LOT 3

THAT PORTION OF A PARCEL OF LAND DESCRIBED IN WARRANTY DEED RECORDED AS INSTRUMENT NO. 620198, RECORDS OF LATAH COUNTY, SITUATE IN GOVERNMENT LOTS 1 AND 2, AND THE EAST HALF OF THE NORTHWEST QUARTER OF SECTION 19, TOWNSHIP 39 NORTH, RANGE 5 WEST, BOISE MERIDIAN, LATAH COUNTY, STATE OF IDAHO, MORE PARTICULARLY DESCRIBED AS FOLLOWS:

COMMENCING AT THE NORTHWEST CORNER OF SAID SECTION 19, SAID POINT BEING SOUTH 87°09'26" WEST A DISTANCE OF 2700.96 FEET FROM THE NORTH QUARTER CORNER OF SAID SECTION 19;

THENCE ALONG THE WEST LINE OF SAID SECTION 19 SOUTH 00°04'50" EAST A DISTANCE OF 532.48 FEET TO A POINT ON THE WESTERLY RIGHT OF WAY LINE OF AUGUSTINE AVENUE;

THENCE ALONG SAID WESTERLY RIGHT OF WAY LINE SOUTH 38°33'29" EAST A DISTANCE OF 145.44 FEET;

THENCE CONTINUING ALONG SAID WESTERLY RIGHT OF WAY LINE SOUTH 42°59'48" EAST A DISTANCE OF 267.47 FEET TO THE **POINT OF BEGINNING**:

THENCE CONTINUING ALONG SAID WESTERLY RIGHT OF WAY LINE SOUTH 42°59'48" EAST A DISTANCE OF 172.40 FEET;

THENCE LEAVING SAID WESTERLY RIGHT OF WAY LINE SOUTH 48°37'42" WEST A DISTANCE OF 183.72 FEET;

THENCE SOUTH 62°57'23" WEST A DISTANCE OF 289.57 FEET TO A POINT ON THE WEST LINE OF SAID SECTION 19;

THENCE ALONG SAID WEST LINE NORTH 00°04'50" WEST A DISTANCE OF 243.58 FEET;

THENCE LEAVING SAID WEST LINE NORTH 89°55'10" EAST A DISTANCE OF 34.21 FEET

THENCE NORTH 80°46'08" EAST A DISTANCE OF 121.44 FEET;

THENCE NORTH 47°00'12" EAST A DISTANCE OF 170.20 FEET TO THE **POINT OF BEGINNING**.

CONTAINING: 72,306 SQUARE FEET OR 1.66 ACRES OF LAND, MORE OR LESS.

PREPARED BY SYNTIER ENGINEERING.

Received 12-16-2022

LOT 4

THAT PORTION OF A PARCEL OF LAND DESCRIBED IN WARRANTY DEED RECORDED AS INSTRUMENT NO. 620198, RECORDS OF LATAH COUNTY, SITUATE IN GOVERNMENT LOTS 1 AND 2, AND THE EAST HALF OF THE NORTHWEST QUARTER OF SECTION 19, TOWNSHIP 39 NORTH, RANGE 5 WEST, BOISE MERIDIAN, LATAH COUNTY, STATE OF IDAHO, MORE PARTICULARLY DESCRIBED AS FOLLOWS:

COMMENCING AT THE NORTHWEST CORNER OF SAID SECTION 19, SAID POINT BEING SOUTH 87°09'26" WEST A DISTANCE OF 2700.96 FEET FROM THE NORTH QUARTER CORNER OF SAID SECTION 19;

THENCE ALONG THE WEST LINE OF SAID SECTION 19 SOUTH 00°04'50" EAST A DISTANCE OF 532.48 FEET TO A POINT ON THE WESTERLY RIGHT OF WAY LINE OF AUGUSTINE AVENUE;

THENCE ALONG SAID WESTERLY RIGHT OF WAY LINE SOUTH 38°33'29" EAST A DISTANCE OF 145.44 FEET;

THENCE CONTINUING ALONG SAID WESTERLY RIGHT OF WAY LINE SOUTH 42°59'48" EAST A DISTANCE OF 448.87 FEET TO THE **POINT OF BEGINNING**:

THENCE CONTINUING ALONG SAID WESTERLY RIGHT OF WAY LINE OF AUGUSTINE AVENUE SOUTH 42°59'48" EAST A DISTANCE OF 87.56 FEET TO THE END OF SAID RIGHT OF WAY LINE;

THENCE SOUTH 42°59'48" EAST A DISTANCE OF 154.47 FEET;

THENCE SOUTH 21°01'42" EAST A DISTANCE OF 349.08 FEET;

THENCE SOUTH 31°02'30" WEST A DISTANCE OF 467.38 FEET;

THENCE SOUTH 89°53'16" WEST A DISTANCE OF 444.18 FEET TO A POINT ON THE WEST LINE OF SAID SECTION 19;

THENCE ALONG SAID WEST LINE NORTH 00°04'50" WEST A DISTANCE OF 651.08 FEET;

THENCE LEAVING SAID WEST LINE NORTH 62°57'23" EAST A DISTANCE OF 289.57 FEET;

THENCE NORTH 48°37'42" EAST A DISTANCE OF 183.72 FEET TO THE **POINT OF BEGINNING**.

CONTAINING: 457,537 SQUARE FEET OR 10.50 ACRES OF LAND, MORE OR LESS.

PREPARED BY SYNTIER ENGINEERING.

Received 12-16-2022

NOTICE OF PUBLIC MEETING

Proposed Lot Division of a 13.75-Acre Parcel Generally Located Southwest of the West Palouse River Drive Ball Fields Property and Southwest of the University of Idaho Arboretum within the City of Moscow as Shown on the Vicinity Map Below. Permit Application LUP2022-0035

A public meeting before the Public Works/Finance Committee of the City Council will be conducted during which the following proposal will be considered:

> Proposed lot division create four lots of approximately 23,072 sf (.53 acres), 46,362 sf (1.06 acres), 72,306 sf (1.66 acres), and 457,537 sf (10.50 acres) in size from an existing parcel 599,277 sf (13.76 acres) in size. The property is southwest of the west Palouse River Drive ball fields property and southwest of the University of Idaho Arboretum, as shown on the vicinity map below. The intention of the lot division is to separate the Residential Office Zoned portion from the R-3 Zoned portion of the property.

MEETING DATE: Monday, January 23, 2023

LOCATION OF MEETING: Council Chambers, Second Floor, Moscow City Hall 206 East Third Street, Moscow, Idaho

MEETING TIME: 4:00 p.m.

Note: Meeting start time is not necessarily indicative of the start time for the proposal advertised in this notice. Multiple hearings and/or agenda items may make it difficult to determine the start time, which could occur late in the meeting.

The file containing information on this matter is available for public review at the Community Development Department located in the Haddock Building at 504 S Washington Street, Moscow, Idaho. Call 883-7035 for a meeting agenda and further information about the matter. You may obtain further information about the public hearing process and procedures on the City Website at: https://www.ci.moscow.id.us/593/Public-Hearing-Notices

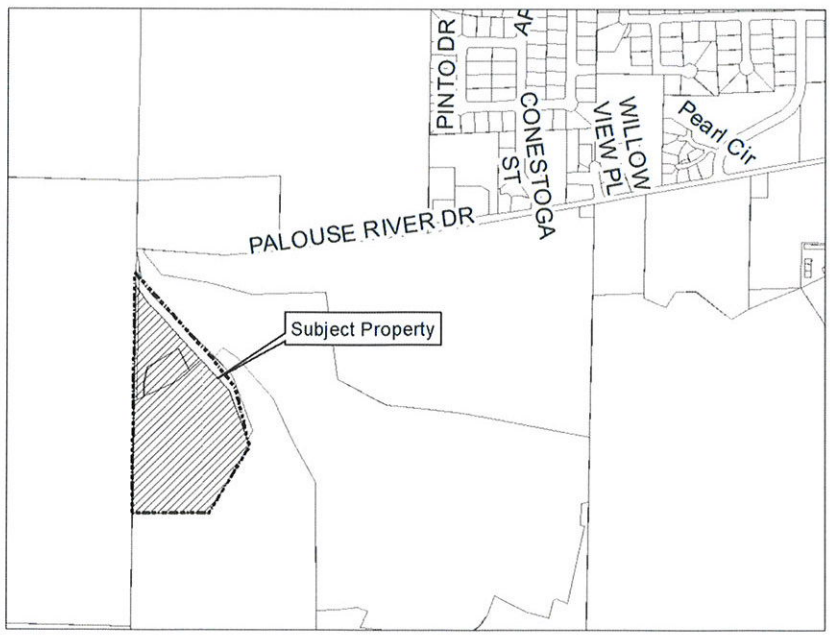

Laurie M. Hopkins
Moscow City Clerk

Jennifer Fleischman
Deputy City Clerk

Publish: January 7, 2023

COMMITTEE STAFF REPORT

DATE: Monday, February 6, 2023

RESPONSIBLE STAFF

Aimee Hennrich, Planner I

ADDITIONAL PRESENTER(S)

OTHER RESOURCES

AGENDA ITEM TITLE

Proposed Lot Line Adjustment of Lots 4, 5, and 7, Block 2, of Anderson 7th Addition – Aimee Hennrich

DESCRIPTION

The applicant, Jim Swift, is requesting a lot line adjustment between three properties legally described as Lots 4, 5, and 7, Block 2, of Anderson 7th Addition. The proposed lot line adjustment would increase Lot 4 from 9,975 sf to 11,400 sf, Lot 5 from 9,975 sf to 11,400 sf, and decrease Lot 7 from 26,565 sf to 23,715 sf. The subject lots are currently vacant land and were previously platted within the Anderson 7th Addition Subdivision. One of the original conditions of approval of the Anderson 7th Addition was that, "Lot 7, Block 2 shall be converted to a flag lot with the flagpole portion providing direct access to Sunnyside Avenue and no vehicular access shall be permitted from Palouse River Drive". On September 6, 2022 City Council approved a request from the applicant to amend this condition of approval to state that, "Vehicular access to Lot 7, Block 2 shall only be permitted from Palouse River Drive for a commercial use upon the property". Since a commercial use is anticipated for Lot 7, Block 2, the applicant is proposing to eliminate the flagpole portion of the lot since access to Sunnyside Avenue is no longer needed. The subject lots are currently zoned Multiple Family Residential (R-4). In the R-4 Zone, the minimum lot size is 5,000 sf and the minimum lot width is 50 feet. All proposed lots meet the minimum lot size and width requirements of the R-4 Zone. This item was reviewed and recommended for approval by the Public Works and Finance Committee on January 23, 2023.

STAFF RECOMMENDATION

Approve the lot line adjustment with no conditions.

PROPOSED ACTIONS

ACTION: Approve the lot line adjustment request.

FISCAL IMPACT

PERSONNEL IMPACT

ATTACHMENTS

1. Anderson Lot 7 Rezone Cover Letter Revised 1-17-23
2. 4393 Parcel A
3. 4393 Parcel B
4. 4393 Parcel C
5. Survey

December 19, 2022

Mayor Bettge and Moscow City Council
City Hall
Moscow, Idaho

Re: Anderson 7th Addition Block 2 Lots 4, 5, and 7 Lot Line Adjustment

Dear Mayor Bettge and City Council

The Anderson 7th Addition owner, Jim Swift is requesting a lot line adjustment to Block 2 Lots 4, 5, and 7. The proposed adjustment would remove Lot 7's flag pole connection to Sunnyside Ave and quit claim equal share of the pole portion to lots 4 and 5. Please see attached proposed record of survey for clarification.

The propose adjusted lot sizes would be:

1. Lot 4 – 11,400 SF
2. Lot 5 – 11,400 SF
3. Lot 7 – 23,715 SF

Enclosed are:

1. Existing Plat
2. Proposed Record of Survey
3. Proposed Legal Descriptions

Please do not hesitate to contact me if you have any questions regarding this lot line adjustment request

Sincerely,

Scott Becker, PE
Principal
Hodge & Associates, Inc.

405 South Washington Street
PO Box 8728
Moscow, ID 83843
Tel: (208) 882-3520
Fax: (208) 882-2622
E-mail: hodge@moscow.com
SCOTT BECKER, PE PRINCIPAL

1/6/2023

Legal Description by Hodge & Associates for: Jim Swift
Final Parcel A

A parcel of land, being a portion of Block 2 of Anderson 7th Addition: A Replat of Portions of Lot 25, Block 4; & Block 5 of Anderson 1st Addition to the City of Moscow, Instrument #622223, Latah County Records, located in the Southwest Quarter of the Southeast Quarter of Section 18, Township 39 North, Range 5 West, Boise Meridian, Latah County, Idaho, described as follows:

Lot 4 of Block 2 of Anderson 7th Addition: A Replat of Portions of Lot 25, Block 4; & Block 5 of Anderson 1st Addition to the City of Moscow.

> **Together With:**
> A parcel of land, being a portion of Lot 7 of Block 2 of Anderson 7th Addition: A Replat of Portions of Lot 25, Block 4; & Block 5 of Anderson 1st Addition to the City of Moscow, Instrument #622223, Latah County Records, located in the Southwest Quarter of the Southeast Quarter of Section 18, Township 39 North, Range 5 West, Boise Meridian, Latah County, Idaho, described as follows:
>
> **Beginning** at the northwest corner of Lot 4 of Block 2 of Anderson 7th Addition, on the southeast right-of-way line of Sunnyside Avenue;
> Thence along the west line of said Lot 4, S28º06’26”E, 142.50 feet to the southwest corner thereof;
> Thence S61º53’34”W, 10.00 feet;
> Thence N28º06’26”W, 142.50 feet to a point on the north line of Lot 7 of Block 2 of Anderson 7th Addition and on the southeast right-of-way line of Sunnyside Avenue;
> Thence along said north line and along said southeast right-of-way, N61º53’34”E, 10.00 feet to the **Point of Beginning**.

Parcel contains 11,400 square feet, more or less.

Subject to: a 5.00 foot wide utility easement, per Anderson 1st Addition to the City of Moscow, Instrument #404026, Latah County Records.

DRAFT

1/6/2023

Legal Description by Hodge & Associates for: Jim Swift
Final Parcel B

A parcel of land, being a portion of Block 2 of Anderson 7th Addition: A Replat of Portions of Lot 25, Block 4; & Block 5 of Anderson 1st Addition to the City of Moscow, Instrument #622223, Latah County Records, located in the Southwest Quarter of the Southeast Quarter of Section 18 and the Northwest Quarter of the Northeast Quarter of Section 19, Township 39 North, Range 5 West, Boise Meridian, Latah County, Idaho, described as follows:

Lot 5 of Block 2 of Anderson 7th Addition: A Replat of Portions of Lot 25, Block 4; & Block 5 of Anderson 1st Addition to the City of Moscow.

Together With:
A parcel of land, being a portion of Lot 7 of Block 2 of Anderson 7th Addition: A Replat of Portions of Lot 25, Block 4; & Block 5 of Anderson 1st Addition to the City of Moscow, Instrument #622223, Latah County Records, located in the Southwest Quarter of the Southeast Quarter of Section 18 and the Northwest Quarter of the Northeast Quarter of Section 19, Township 39 North, Range 5 West, Boise Meridian, Latah County, Idaho, described as follows:

Beginning at the northeast corner of Lot 5 of Block 2 of Anderson 7th Addition, on the southeast right-of-way line of Sunnyside Avenue;
Thence along said southeast right-of-way line and along the north line of Lot 7 of said Block 2, N61°53'34”E, 10.00 feet;
Thence leaving said southeast right-of-way line and said north line, S28º06’26”E, 142.50 feet;
Thence S61º53’34”W, 10.00 feet to the southeast corner of Lot 5 of Block 2 of Anderson 7th Addition;
Thence along the east line thereof, N28º06’26”W, 142.50 feet to the **Point of Beginning**.

Parcel contains 11,400 square feet, more or less.

Subject to: a 5.00 foot wide utility easement, per Anderson 1st Addition to the City of Moscow, Instrument #404026, Latah County Records.

DRAFT

\Legal Description

1/6/2023

Legal Description by Hodge & Associates for: Jim Swift
Final Parcel C

A parcel of land, being a portion of Lot 7 of Block 2 of Anderson 7th Addition: A Replat of Portions of Lot 25, Block 4; & Block 5 of Anderson 1st Addition to the City of Moscow, Instrument #622223, Latah County Records, located in the Southwest Quarter of the Southeast Quarter of Section 18 and the Northwest Quarter of the Northeast Quarter of Section 19, Township 39 North, Range 5 West, Boise Meridian, Latah County, Idaho, described as follows:

Lot 7 of Block 2 of Anderson 7th Addition: A Replat of Portions of Lot 25, Block 4; & Block 5 of Anderson 1st Addition to the City of Moscow.

Excepting Therefrom:
A parcel of land, being a portion of Lot 7 of Block 2 of Anderson 7th Addition: A Replat of Portions of Lot 25, Block 4; & Block 5 of Anderson 1st Addition to the City of Moscow, Instrument #622223, Latah County Records, located in the Southwest Quarter of the Southeast Quarter of Section 18, Township 39 North, Range 5 West, Boise Meridian, Latah County, Idaho, described as follows:

Beginning at the northwest corner of Lot 4 of Block 2 of Anderson 7th Addition, on the southeast right-of-way line of Sunnyside Avenue;
Thence along the west line of said Lot 4, S28º06’26”E, 142.50 feet to the southwest corner thereof;
Thence S61º53’34”W, 10.00 feet;
Thence N28º06’26”W, 142.50 feet to a point on the north line of Lot 7 of Block 2 of Anderson 7th Addition and on the southeast right-of-way line of Sunnyside Avenue;
Thence along said north line and along said southeast right-of-way, N61º53’34”E, 10.00 feet to the **Point of Beginning.**

Also Excepting Therefrom:
A parcel of land, being a portion of Lot 7 of Block 2 of Anderson 7th Addition: A Replat of Portions of Lot 25, Block 4; & Block 5 of Anderson 1st Addition to the City of Moscow, Instrument #622223, Latah County Records, located in the Southwest Quarter of the Southeast Quarter of Section 18 and the Northwest Quarter of the Northeast Quarter of Section 19, Township 39 North, Range 5 West, Boise Meridian, Latah County, Idaho, described as follows:

Beginning at the northeast corner of Lot 5 of Block 2 of Anderson 7th Addition, on the southeast right-of-way line of Sunnyside Avenue;
Thence along said southeast right-of-way line and along the north line of Lot 7 of said Block 2, N61°53'34”E, 10.00 feet;
Thence leaving said southeast right-of-way line and said north line, S28º06’26”E, 142.50 feet;
Thence S61º53’34”W, 10.00 feet to the southeast corner of Lot 5 of Block 2 of Anderson 7th Addition;
Thence along the east line thereof, N28º06’26”W, 142.50 feet to the **Point of Beginning**.

\Legal Description

DRAFT

Parcel contains 23,715 square feet, more or less.

Subject to: a 5.00 foot wide utility easement, per Anderson 1st Addition to the City of Moscow, Instrument #404026, Latah County Records.

DRAFT

\Legal Description

Sections 18 & 19, T39N, R5W, BM

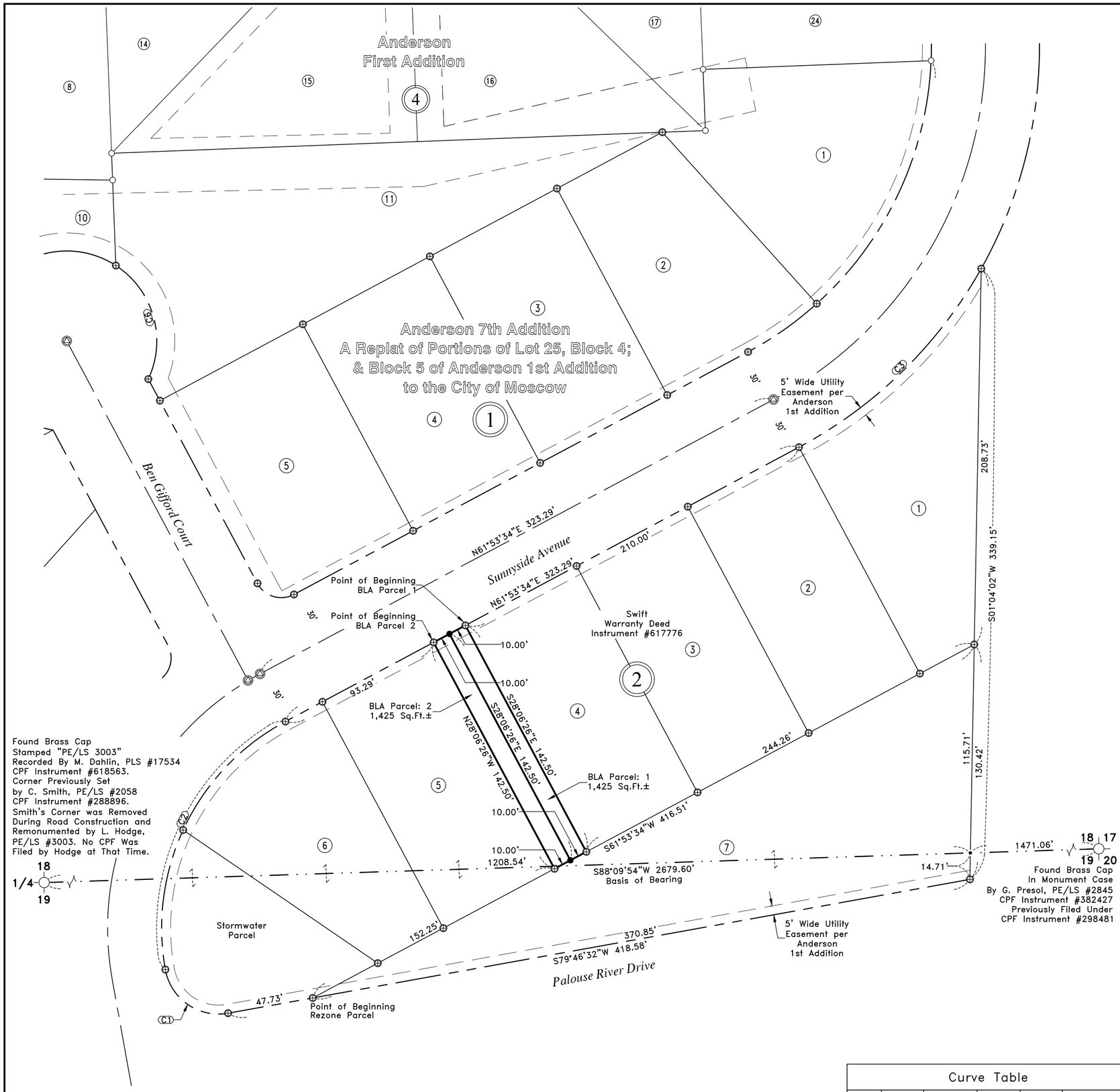

Basis of Bearings

The Basis of Bearings for this survey is identical to the Idaho Coordinate System, West Zone, NAD 83 as shown between the found southeast corner of Section 18 and the found southwest corner of the Southeast Quarter of Section 18, said bearing being S88°09'54"W.

Survey References:

1. Anderson 1st Addition to the City of Moscow, Instrument #404026, by G. Stone, PLS #4346.
2. Warranty Deed, Instrument #617776, L.L.F. Inc to James B Swift.
3. Anderson 7th Addition: A Replat of Portions of Lot 25, Block 4; & Block 5 of Anderson 1st Addition to the City of Moscow, Instrument #622223, by M. Dahlin, PLS #17534.

Surveyor's Certificate

I, Michael E. Dahlin, PLS #17534, State of Idaho, do hereby certify that the survey represented by this map was performed by me or under my supervision in accordance with the laws of the State of Idaho and at the request of Jim Swift in September 2022.

Surveyor Narrative

1. The purpose of this survey was to accommodate Boundary Line Adjustments (BLAs) involving Lots 4, 5 and 7 of Block 2 of Anderson 7th Addition. Wherein the "flag" section of said Lot 7 would be split in two with the east half then being parceled with said Lot 4 and the west half being parceled with said Lot 5.
2. The south line of the Southeast Quarter of Section 18, Township 39 North, Range 5 West, Boise Meridian, was located to establish the Basis of Bearings and primary boundary control. Block 2 of Anderson 7th Addition was rotated to project basis and located accordingly.
2. See Anderson 7th Addition, Instrument #622223 for survey record data and original parcel boundary resolution. Measured dimensions shown on this survey match all corresponding record dimensions from said Plat.

Legend

- Found Monument as Described
- Set 5/8" Diameter Rebar w/Aluminum Cap Stamped "PLS 17534"
- Found Aluminum Cap Stamped "PLS 17534" Per Anderson 7th Addition/Replat
- Found City of Moscow Standard Centerline Monument Stamped "PLS 17534" per Anderson 7th Addition
- Found 5/8" Diameter Rebar w/Plastic Cap Stamped "Hodge 3003"
- Calculated Position
- (1) Block Number
- (1) Lot Number
- (C1) Curve Data – See Curve Table
- BLA Boundary Line Adjustment
- Boundary Line Adjustment Parcel Boundary Line
- Existing Lot Line
- Section Line
- Right-of-Way
- Easement

SCALE: 1"=40'

FEET 40 30 20 10 0 20 40

NO._____
AT THE REQUEST OF:

_____
DATE & HOUR:

_____ M.
TONYA DODGE
LATAH COUNTY RECORDER

FEE $_____ BY_____

Curve Table					
Curve	Length	Delta	Radius	Chord	Chrd Brng
C1	47.12'	90°00'00"	30.00'	42.43'	N55°13'28"W
C2	163.63'	72°07'02"	130.00'	153.04'	N25°50'03"E
C3	143.63'	32°35'01"	252.56'	141.70'	N45°36'03"E
C6	71.54'	81°58'39"	50.00'	65.59'	N15°57'58"W

Hodge & Associates, Inc.
Engineers • Planners • Surveyors
P.O. Box 8728
1455 S. Washington Street
Moscow, Idaho 83843
(208) 882-3520
RIM ROCK CONSULTING, INC.
Land Surveying
Site Planning
Mapping
139 West 3rd Street #102 Moscow, Idaho 83843 208.883.5339 mmcole@rimrockconsulting.net

PRELIMINARY NOT FOR RECORDING

PROFESSIONAL LAND SURVEYOR LICENSED 17534 STATE OF IDAHO MICHAEL E. DAHLIN

Record of Survey for:
Jim Swift
Latah County, Idaho

Drafted by:	SW
Checked by:	MED
File Name:	4393 BLA.dwg
Tab:	Layout
Plot Style	OCE.ctb
Project:	4373-08-22
Date:	12/12/22

1 of 1

Received 12-20-2022

Sections 18 & 19, T39N, R5W, BM

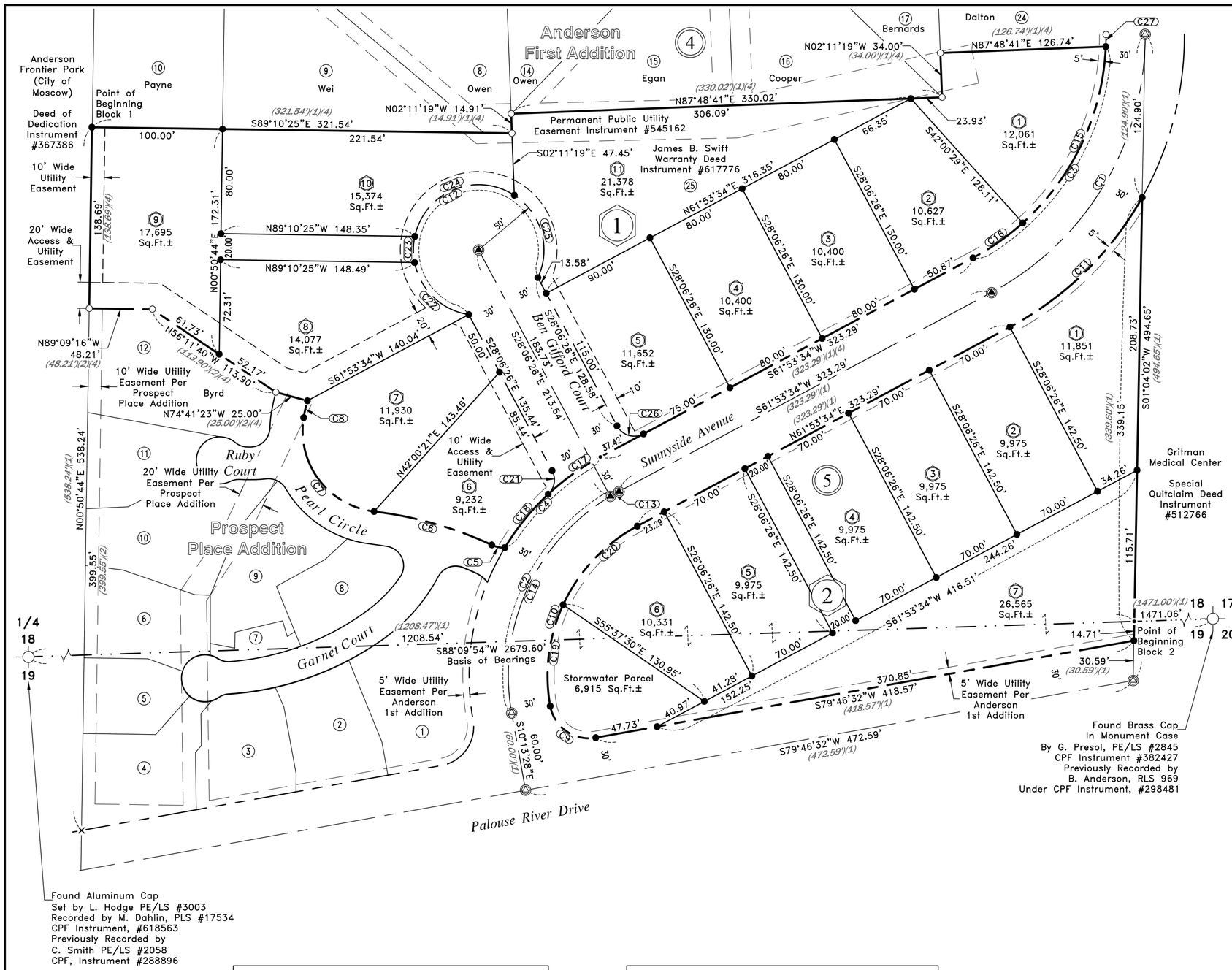

Survey References:

1. Anderson 1st Addition to the City of Moscow, Instrument #404026, by G. Stone, PLS #4346.
2. Prospect Place Addition to the City of Moscow, Instrument #580048, by M. Roudebush, PLS #16744.
3. Permanent Public Utility Easement, Instrument #545162.
4. Warranty Deed, Instrument #617776, L.L.F. Inc to James B. Swift.

Basis of Bearings

The Basis of Bearings for this survey is identical to the Idaho Coordinate System, West Zone, NAD 83 as shown between the found southeast corner of Section 18 and the found southwest corner of the Southeast Quarter of Section 18, said bearing being S88°09'54"W.

Surveyor Narrative

1. The purpose of this survey was to locate, monument and map the boundaries of the parcel of land described in Warranty Deed, Instrument #617776, being a portion of Lot 25 of Block 4 and the entirety of Block 5 of Anderson 1st Addition to the City of Moscow, and to replat said parcel, as shown hereon.
2. The south line of the Southeast Quarter of Section 18 was located to establish the Basis of Bearings and primary boundary control. The parcel of land described in Warranty Deed, Instrument #617776 was rotated to project basis and located accordingly.

Legend

- Found Monument as Described
- Set 5/8" Diameter Rebar w/Aluminum Cap Stamped "PLS 17534"
- Set City of Moscow Standard Centerline Monument Stamped "PLS 17534"
- Found 5/8" Diameter Rebar Stamped "Hodge 3003"
- Found Centerline Monument
- Found Scribe in Concrete
- Calculated Position
- Replat Block Number
- Replat Lot Number
- Anderson 1st Addition Block Number
- Other Subdivision Lot Number
- (100') Record Data – See Survey References
- Replat Boundary Line
- Replat Lot line
- Other Lot line
- Section Line
- Centerline
- Right-of-Way
- Easement – This Replatting
- Existing Easement

SCALE: 1"=60'

FEET 60 45 30 15 0 30 60

Curve Table

Curve	Length	Delta	Radius	Chord	Chrd Brng
C1	241.66'	62°12'44"	222.56'	229.96'	S30°47'12"W
C2	201.39'	72°07'02"	160.00'	188.36'	S25°50'03"W
C3	199.85'	59°27'52"	192.56'	191.00'	N32°09'37"E
C4	102.32'	30°51'19"	190.00'	101.09'	S46°27'54"W
C5	10.22'	23°25'00"	25.00'	10.15'	N76°53'24"W
C6	94.02'	17°56'33"	300.22'	93.63'	N74°09'18"W
C7	100.37'	92°30'16"	62.17'	89.82'	N36°52'27"W
C8	13.19'	5°56'04"	127.32'	13.18'	N12°20'35"E
C9	47.12'	90°00'00"	30.00'	42.43'	N55°13'28"W
C10	163.63'	72°07'02"	130.00'	153.04'	N25°50'03"E
C11	143.63'	32°35'01"	252.56'	141.70'	N45°36'03"E
C12	249.81'	286°15'37"	50.00'	60.00'	N61°53'34"E
C13	7.58'	2°42'50"	160.00'	7.58'	S60°32'09"W
C14	193.81'	69°24'12"	160.00'	182.18'	S24°28'38"W

Measurements shown here for curves 1 through 11 match the measurements of these same curves as shown on the documents of record.

Curve Table

Curve	Length	Delta	Radius	Chord	Chrd Brng
C15	153.13'	45°33'49"	192.56'	149.13'	S25°12'36"W
C16	46.72'	13°54'03"	192.56'	46.60'	S54°56'32"W
C17	49.28'	14°51'44"	190.00'	49.15'	S54°27'42"W
C18	53.04'	15°59'36"	190.00'	52.86'	S39°02'02"W
C19	79.36'	34°58'42"	130.00'	78.14'	N07°15'52"E
C20	84.27'	37°08'20"	130.00'	82.80'	N43°19'23"E
C21	19.67'	75°08'16"	15.00'	18.29'	N09°27'42"E
C22	61.22'	70°09'24"	50.00'	57.47'	N46°09'33"W
C23	20.14'	23°04'28"	50.00'	20.00'	N00°27'23"E
C24	96.91'	111°03'06"	50.00'	82.44'	N67°31'10"E
C25	71.54'	81°58'39"	50.00'	65.59'	S15°57'58"E
C26	23.56'	90°00'00"	15.00'	21.21'	S73°06'26"E
C27	9.24'	2°45'01"	192.56'	9.24'	N01°03'11"E

NO._____
AT THE REQUEST OF:

_____
DATE & HOUR:

_____ M.
TONYA DODGE
LATAH COUNTY RECORDER

FEE $_____ BY_____

Hodge & Associates, Inc.
Professional Land Surveyors
P.O. Box 8728
1335 S. Washington Street
Moscow, Idaho 83843
(208) 882-3520
RIM ROCK CONSULTING, INC.
Land Surveying
Site Development
Mapping
193 West 3rd Street 97102 Moscow, Idaho 83843 208.883.5339 rimrock@moscowconsulting.net

PRELIMINARY
NOT FOR RECORDING

PROFESSIONAL LAND SURVEYOR
LICENSED
17534
STATE OF IDAHO
MICHAEL E. DAHLIN

Anderson 7th Addition
A Replat of Portions of Lot 25, Block 4; & Block 5
of Anderson 1st Addition to the City of Moscow
Latah County, Idaho

Drafted by:	SW
Checked by:	MED
File Name:	4393 Plat.dwg
Tab:	Layout
Plot Style	Primary.ctb
Project:	4393-02-21
Date:	2/2/22

1 of 2

Received 12-20-2022

Sections 18 & 19, T39N, R5W, BM

LEGAL DESCRIPTION

A parcel of land, being a portion of Lot 25 of Block 4 of Anderson 1st Addition to the City of Moscow, located in the Southwest Quarter of the Southeast Quarter of Section 18, Township 39 North, Range 5 West, Boise Meridian, Latah County, Idaho, described as follows:

Beginning at the northwest corner of Lot 25, Block 4 of Anderson 1st Addition to the City of Moscow, Instrument #404026, Latah County Records;
Thence along the north boundary of said Lot 25, the following five courses:
S89°10'25"E, 321.54 feet;
Thence N02°11'19"W, 14.91 feet;
Thence N87°48'41"E, 330.02 feet;
Thence N02°11'19"W, 34.00 feet;
Thence N87°48'41"E, 126.74 feet, to a point on the northwest right-of-way line of Sunnyside Avenue;
Thence along said northwest right-of-way line the following three courses;
199.85 feet along a non-tangent curve to the right, said curve having a Delta = 59°27'52",
Radius = 192.56 feet, Chord = 191.00 feet and a Chord Bearing = S32°09'37"W;
Thence S61°53'34"W, 323.29 feet;
Thence 102.32 feet along a curve to the left, said curve having a Delta = 30°51'19",
Radius = 190.00 feet, Chord = 101.09 feet and a Chord Bearing = S46°27'54"W to the northeast corner of Prospect Place Addition to the City of Moscow, Instrument #580048, Latah County Records;
Thence leaving said northwest right-of-way line, along the north boundary of said Prospect Place Addition the following seven courses:
10.22 feet along a non-tangent curve to the right, said curve having a Delta = 23°25'00",
Radius = 25.00 feet, Chord = 10.15 feet and a Chord Bearing = N76°53'24"W;
Thence 94.02 feet along a non-tangent curve to the left, said curve having a Delta = 17°56'33",
Radius = 300.22 feet, Chord = 93.63 feet and a Chord Bearing = N74°09'18"W;
Thence 100.37 feet along a curve to the right, said curve having a Delta = 92°30'16",
Radius = 62.17 feet, Chord = 89.82 feet and a Chord Bearing = N36°52'27"W;
Thence 13.19 feet along a non-tangent curve to the right, said curve having a Delta = 5°56'04",
Radius = 127.32 feet, Chord = 13.18 feet and a Chord Bearing = N12°20'35"E;
Thence N74°41'23"W, 25.00 feet;
Thence N56°11'40"W, 113.90 feet;
Thence N89°09'16"W, 48.21 feet to the northwest corner of said Prospect Place Addition to the City of Moscow and the west line of Lot 25, Block 4 of Anderson 1st Addition to the City of Moscow;
Thence N00°50'44"E, 138.69 feet to the **Point of Beginning**.

Parcel contains 3.70 acres, more or less.

Together With:
A parcel of land, being Block 5 of Anderson 1st Addition to the City of Moscow, located in the Southwest Quarter of the Southeast Quarter of Section 18, and the Northwest Quarter of the Northeast Quarter of Section 19, Township 39 North, Range 5 West, Boise Meridian, Latah County, Idaho, described as follows:

Beginning at the southeast corner of Block 5 of Anderson 1st Addition to the City of Moscow on the north right-of-way line of Palouse River Drive;
Thence along said north right-of-way line, S79°46'32"W, 418.57 feet to a point on the southeast right-of-way line of Sunnyside Avenue;
Thence along said southeast right-of-way line the following four courses:
47.12 feet along a curve to the right, said curve having a Delta = 90°00'00",
Radius = 30.00 feet, Chord = 42.43 feet and Chord Bearing = N55°13'28"W;
Thence 163.63 feet along a curve to the right, said curve having a Delta = 72°07'02",
Radius = 130.00 feet, Chord = 153.04 feet and Chord Bearing = N25°50'03"E;
Thence N61°53'34"E, 323.29 feet;
Thence 143.63 feet along a curve to the left, said curve having a Delta = 32°35'01",
Radius = 252.56 feet, Chord = 141.70 feet and Chord Bearing = N45°36'03"E to the northeast corner of Block 5 of Anderson 1st Addition to the City of Moscow;
Thence leaving said southeast right-of-way line, S01°04'02"W, 339.15 feet to the **Point of Beginning**.

Parcel contains 2.19 acres, more or less.

Overall replatted area contains 5.89 acres, more or less.

DEDICATION

Know all persons by these presents, that I, James B. Swift, owner of the land and premises described above, have caused said land to be subdivided and platted as shown hereon as an addition to the City of Moscow, Latah County, Idaho, to be known as Anderson 7th Addition: A Replat of Portions of Lot 25, Block 4; & Block 5 of Anderson 1st Addition to the City of Moscow, Latah County, Idaho. The easements as shown on this plat are hereby reserved for public access and utility purposes as designated hereon and no permanent structures are to be erected within the lines of said easements. The owner certifies that all lots within this plat will be eligible to receive water service from an existing water system, be the water system municipal, a water district, a public utility subject to the regulation of the Idaho public utilities commission, or a mutual or nonprofit water company, and the existing water distribution system has agreed in writing to serve all of the lots in the subdivision (Section 50-1334, Idaho Code). The owner does herewith declare to offer for dedication to the public for public use the street right-of-ways and the Stormwater Parcel for stormwater detention.
In witness thereof, the undersigned has set his hand and seal.

James B. Swift _____ Date _____

ACKNOWLEDGMENT

State of_____

County of_____

On this_____day of_____2022, before me, the undersigned Notary Public in and for the State of Idaho, personally appeared James B. Swift, known or identified to me to be the person whose name is subscribed to the foregoing and acknowledged to me that he executed the same.

In witness whereof, I hereunto set my hand and official seal.

Notary Public,_____

Residing in_____

My Commission Expires_____

Megan Carpenter
NOTARY PUBLIC
Comm No. 58496
STATE OF IDAHO

APPROVALS

Moscow Planning and Zoning Commision
Approval of this plat by the City of Moscow certifies agreement to allow connection of the above described property to the municipal water system and satisfies Section 50-1334, Idaho Code. Examined and approved by action of the Moscow Planning and Zoning Commission at a regular meeting with a quorum present this_____day of_____, 2022.

Chairman, Planning and Zoning Commission

Moscow City Council
Examined and approved by action of the Moscow City Council at a regular meeting with a quorum present this_____day of_____2022.
Dedication of all public streets, easements, and parkland described on this plat is hereby accepted in accordance with Section 50-1313, Idaho Code.

Clerk _____ Mayor, City of Moscow _____

City Engineer, City of Moscow
Examined and approved by the City Engineer this_____day of_____2022.

City Engineer, City of Moscow

Latah County Surveyor
Examined and approved by the Latah County Surveyor this_____day of_____2022.

Latah County Surveyor

Latah County Treasurer
I hereby certify that taxes and assessments on property shown hereon have been paid for 2021 and preceding years as of this_____day of_____2022.

Latah County Treasurer

Public Health – Idaho North Central Health District
Sanitary restrictions as required by Idaho Code, Title 50, Chapter 13 have been satisfied. Sanitary restrictions may be reimposed, in accordance with Section 50-1326, Idaho Code, by the issuance of a certificate of disapproval.

Public Health – Idaho North Central District, Senior Environmental Health Specialist _____ Date _____

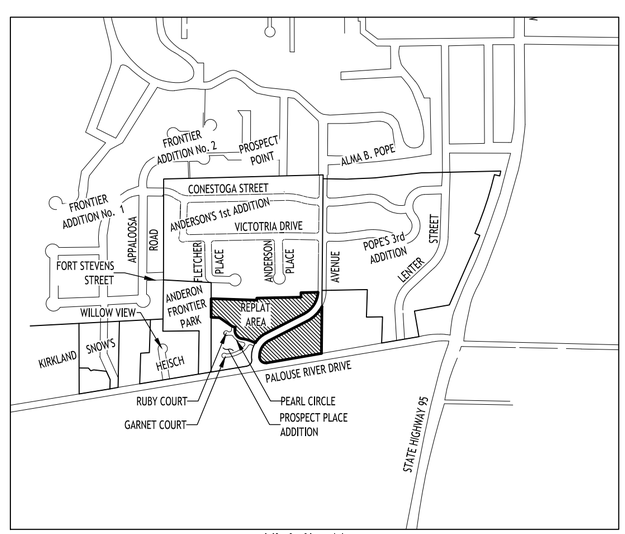

Vicinity Map

SURVEYOR'S CERTIFICATE

I, Michael E. Dahlin, P.L.S. #17534, State of Idaho, hereby certify that the above platted and described property represents a survey performed by me or under my supervision in accordance with the laws of the State of Idaho, and that the streets, lots, distances, and monuments have been measured and located as shown thereon.
The interior monuments will be set in accordance with Idaho Code 50-1303, on or before 12-01-2022, as referenced on the plat and approved by the City of Moscow.
Witness my hand and seal this_____day of_____2022.

PROFESSIONAL LAND SURVEYOR
LICENSED
17534
STATE OF IDAHO
MICHAEL E. DAHLIN

Michael E. Dahlin, PLS #17534

NO._____
AT THE REQUEST OF:

_____
DATE & HOUR:

_____M.
TONYA DODGE
LATAH COUNTY RECORDER

FEE $_____BY_____

Rim Rock Consulting, Inc.
Engineers • Planners • Surveyors
P.O. Box 8728
405 S. Washington Street
Moscow, Idaho 83843
(208) 882-3520
RIM ROCK CONSULTING, INC.
Land Surveying
Civil Engineering
Mapping
135 West 2nd Street #102 Moscow, Idaho 83843 208.883.5339 rimrock@rimrockconsulting.net

PRELIMINARY
NOT FOR RECORDING

Anderson 7th Addition
A Replat of Portions of Lot 25, Block 4; & Block 5
of Anderson 1st Addition to the City of Moscow
Latah County, Idaho

Drafted by:	SW
Checked by:	MED
File Name:	4393 Plat.dwg
Tab:	Sign
Plot Style	Primary.ctb
Project:	4393-02-21
Date:	2/2/22

2 of 2

Received 12-20-2022

CITY COUNCIL STAFF REPORT

DATE: Monday, February 6, 2023

AGENDA ITEM TITLE

Personal Delivery Devices License Agreement-Starship Technologies - Cody Riddle

RESPONSIBLE STAFF	REVIEWED BY
Cody Riddle, Deputy City Supervisor - Community Development	This was reviewed by the Administrative Committee on January 23, 2023 and recommended for approval.
ADDITIONAL PRESENTER(S)	**OTHER RESOURCES**

DESCRIPTION

Starship Technologies is seeking approval of a non-exclusive license agreement to operate personal delivery devices in the public right-of-way. These devices (delivery robots) will operate primarily on public sidewalks to deliver food and beverages from various establishments. The devices have been operating for nearly a year on the University of Idaho campus. The company would like to expand their service area to reach additional businesses and residents on the perimeter of campus. If approved, the one-year agreement will allow a maximum of thirty (30) devices to operate within the right-of-way at any given time. The devices will continue to be stored and deployed from the Vandal Store on the University campus.

The City does not have the ability to prohibit the use of personal delivery devices. Idaho State Code 40-2305 authorizes their operation within the public right-of-way. The statute does allow local municipalities to adopt regulations to ensure their safe operation. The attached license agreement includes provisions to protect other uses of the right-of-way. These standards, combined with the provisions of State Law, will ensure a safe environment for all users of the right-of-way. A copy of the State Statute is attached for reference.

The agreement was reviewed by the Administrative Committee on January 23, 2023. The Committee recommended approval of the one-year agreement with two additional provisions. The devices shall not operate above four miles per hour, and are prohibited from delivering alcohol. The applicant is agreeable to the additional limitations, and they have been included in the attached, updated agreement.

STAFF RECOMMENDATION

Approval of the license agreement with Starship Technologies.

PROPOSED ACTIONS

ACTION: Approve the proposed license agreement.

FISCAL IMPACT

PERSONNEL IMPACT

ATTACHMENTS

1. Section 40-2305 – Idaho State Code
2. Moscow,ID_IncidentManagement
3. PDD License Agreement _Final Draft 1-27-23

Idaho Statutes

Idaho Statutes are updated to the web July 1 following the legislative session.

TITLE 40
HIGHWAYS AND BRIDGES
CHAPTER 23
MISCELLANEOUS PROVISIONS

40-2305. PERSONAL DELIVERY DEVICES. (1) Notwithstanding any provision of law to the contrary, a personal delivery device as defined in section 49-117, Idaho Code, is authorized to operate on sidewalks, crosswalks, and the sides or berms of highways; provided, however, that this section does not restrict a county, municipality, or highway district from otherwise adopting regulations for the safe operation of personal delivery devices consistent with this section.

(2) All personal delivery devices shall obey all traffic and pedestrian control devices and signs.

(3) A personal delivery device operating on sidewalks and crosswalks has all the rights and duties applicable to a pedestrian under the same circumstances, except that the personal delivery device shall not unreasonably interfere with pedestrians or traffic and shall yield the right-of-way to pedestrians on sidewalks and crosswalks.

(4) All personal delivery devices shall include a plate or marker that identifies the name and contact information of the operator of the personal delivery device and a unique identifying device number.

(5) All personal delivery devices shall be equipped with a braking system that, when active or engaged, enables the personal delivery device to come to a controlled stop.

(6) No personal delivery device shall transport hazardous materials or hazardous wastes that are regulated pursuant to the hazardous materials transportation act, 49 U.S.C. 5101-5128, and require placarding pursuant to subpart F of 49 CFR 172.

(7) No personal delivery device shall be operated on a public highway in the state, except on the side or berm of the road or to the extent necessary to cross a crosswalk.

(8) No personal delivery device shall operate on a sidewalk or crosswalk unless the personal delivery device operator is controlling or monitoring the navigation and operation of the personal delivery device.

History:

[40-2305, added 2017, ch. 147, sec. 4, p. 364; am. 2022, ch. 98, sec. 1, p. 340.]

How current is this law?

Search the Idaho Statutes and Constitution

STARSHIP

INCIDENT MANAGEMENT

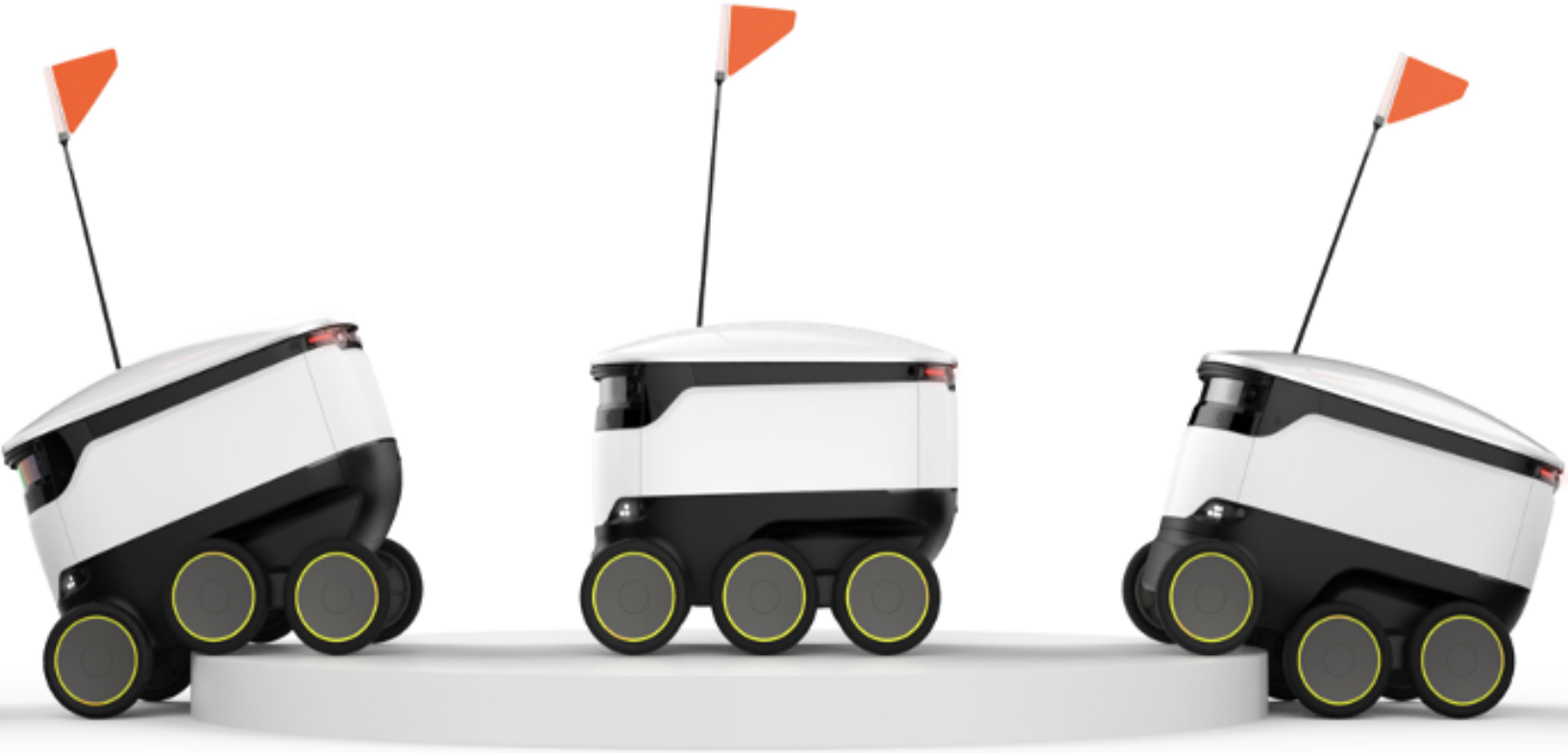

Starship - General Safety Policy

At Starship, we believe that Safety and Risk Management is the foundation of our engineering, operations, and service. We take pride in being the first of its kind autonomous robot delivery service and continue to work hard on our Safety and Risk Management implementation to lead the industry by our high standards.

By embracing safety and risk management principles, we ensure not only our continued business success, but also our progress in realizing our vision of last mile delivery. We are committed to improving our safety performance as a company and building our corporate culture with our mission being safety centric and understanding the risks it presents.

As such, we will operate in accordance with these principles:

- Foster a safety culture throughout Starship and continue to improve our safety standards while incorporating them in our everyday activities and decisions.
- Clearly assign safety and risk management responsibilities to all levels and carefully oversee them to ensure we meet and exceed the standards we set forth.
- Train our people to cultivate safety and risk management within their day-to-day.
- Promote a positive, transparent reporting culture through "no-blame" policies.
- Resource our activities with competent and skilled safety and risk management professionals to execute our strategies.
- Establish a safety and risk management review board with representation from all departments and establish realistic safety and risk management targets.
- Proactively identify hazards in the environments we operate and establish protective and reactive measures to mitigate risks.
- Continue to identify and improve our safety risk indicators and ensure we achieve our safety targets.

We have developed technology and use procedures to ensure redundancy. As we scale up, we look forward to partnering with local authorities, service providers, the international community and other stakeholders to enhance the industry baseline for a higher safety implementation.

Starship's vision is that “through the seamless movement of things we can offer people the future of convenience for their everyday needs, delivered to their homes with a little bit of robot magic”. We will continue to set standards as an international contributor to safety as our industry expands.

This document contains information that is confidential and legally privileged. This information is only for the use of the individual or entity to which it was intended.

Reporting an Incident - Local Law Enforcement (Moscow, Idaho)

1. Law enforcement is called due to an incident with the robot/personal delivery device (PDD).
2. Law enforcement documents incident.
3. Law enforcement reaches out to the following local contacts (in order of availability), if necessary, and emails safety@starship.co, below. Law enforcement can also provide the safety@starship.co email to the claimant for direct contact.
    a. **Option 1**: Andrew Tucker, *Operations Site Lead*: (208)997-1123
    b. **Option 2**: Chip Comery, *Area Operations Lead*: (419)320-0694
    c. **Option 3**: *US Hotline*: (628)400-6200
    d. **Option 4:** Wajahat Beg, *Director of Operational Risk and Safety Management*: (650)695-2058
4. Investigation and Communication with External Parties
    a. Starship will be in communications with the claimant and/or their representative.
    b. The Starship safety and risk management (SORM) team will lead the investigation of the Incident and communication with parties involved.
5. Reporting to insurers
    a. The SORM team, with input from the Legal, Government Affairs and Marketing team, will coordinate any necessary reporting to insurers.

Vandalism of PDDs - Local Law Enforcement or University Enforcement (Moscow, Idaho)

1. Reporting to police: Starship will file an incident report with the relevant campus or municipal police department when we reasonably believe that:
    a. a third party maliciously damaged or stolen a PDD or other Starship property, and
    b. our damages will exceed $200.
    c. any fraud worth mentioning has taken place against Starship Technologies.
2. Starship will provide an estimate of the damage, including labor as well as an estimate of the replacement cost of the robot, if necessary on the incident report.
3. Starship will contact the insurance and have the insurance company also conduct an investigation to settle the matter.

This document contains information that is confidential and legally privileged. This information is only for the use of the individual or entity to which it was intended.

Frequently Asked Questions:

1. **What do Starship's PDDs deliver?**
   Starship's PDDs are presently engaged in the following applications: (1) restaurant delivery, (2) grocery and retail delivery, (3) parcel delivery, and (4) industrial-campus delivery. The nature of our partner's business will dictate the usage of the PDDs.
2. **How do customers obtain delivery services from a PDD?**
   The process is very simple. Customers use Starship's mobile app to order their items from participating businesses and select the time and destination for the delivery. The customer is then notified through the mobile app when their goods are ready for delivery, and can track the movement of the PDD through the mobile app. Once the PDD arrives at its destination, the customer is notified. The customer can then retrieve their goods by unlocking the lid of the PDD by pressing the unique 'unlock' button on the Starship mobile app.
3. **How do PDDs operate?**
   PDDs are low mass (approx. 75 lbs. without cargo), low speed (4 mph) devices that travel on sidewalks, using proprietary mapping, navigation and sophisticated obstacle avoidance technology. PDDs are equipped with cameras, a sensor suite, radar, time-of-flight capabilities, and are constantly monitored by a remote operator. PDDs are capable of identifying objects in their vicinity and making the necessary course corrections to avoid them. When an object is adjacent to the PDD, but not in front of it, the PDD reduces its speed. When an object is in front of the PDD, the PDD will come to a complete stop.
4. **How does Starship approach governments for authorization to operate?**
   Starship only operates in a jurisdiction once it has obtained permission from the appropriate governmental authorities. As part of this approach, Starship has worked to obtain national legislative or regulatory permissions (Denmark, Finland, Estonia); state level laws or approvals (25 U.S. states, Hamburg); county-level or municipal permits (U.K., U.S.).
5. **How does Starship protect customer information and the privacy of the general public?**
   Starship never shares customer information and does not store such information on its PDDs. For more information, Starship's privacy policy can be found at https://www.starship.xyz/data-privacy/.
6. **How do PDDs safeguard and serve individuals with physical or visual disabilities?**
   Accessibility has been a central focus of Starship's since its founding. The company is committed to accessibility as it relates to both operations and service. If a PDD encounters an individual in a wheelchair, the wheelchair is identified using both sonic sensors and computer imaging. For individuals with visual disabilities, the PDDs are programmed to identify and avoid pedestrians. As previously mentioned, the PDD will stop if an object appears in front of it and slow down if an object is alongside it. Additionally, Starship's app is fully compliant with the Web Content Accessibility Guidelines ("WCAG").

This document contains information that is confidential and legally privileged. This information is only for the use of the individual or entity to which it was intended.

CITY OF MOSCOW
LICENSING AGREEMENT
FOR THE RIGHT OF WAY OCCUPANCY PERMIT
FOR STARSHIP TECHNOLOGIES

THIS LICENSING AGREEMENT FOR THE RIGHT OF WAY OCCUPANCY PERMIT (hereinafter "Agreement") shall become effective _____, 2023, between the City of Moscow, a municipal corporation of the State of Idaho, 206 East Third Street, Moscow, Idaho, 83843 (hereinafter "CITY"), and Starship Technologies, Inc. whose business address is 535 Mission Street, Floor 19, San Francisco, California 94105, a U.S. company with headquarters in San Francisco, California (hereinafter "Permit Holder").

Preamble

WHEREAS, the purpose of the Permit is to provide Permit Holder with the non-exclusive authority to operate personal delivery devices (PDDs) on certain public sidewalks in the **City of Moscow** ("CITY") and transitorily on public spaces interconnected to sidewalks; and

WHEREAS, CITY has authority over public sidewalks and public spaces interconnected to sidewalks (individually and collectively, "Right of Way"); and

WHEREAS, Idaho Code §49-117(8) defines a "personal delivery device" (hereinafter "PDD") as "an electrically powered device that is operated on sidewalks, crosswalks, and the sides or berms of highways and is intended primarily to transport property; weighs less than five hundred fifty (550) pounds, excluding cargo; operates at a maximum speed of ten (10) miles per hour when on sidewalks; and is equipped with technology to allow for operation of the device with or without the active control or monitoring of a natural person."; and

WHEREAS, Idaho Code §40-2305(1), authorizes a municipality to adopt regulations for the safe operation of PDD's consistent with Title 40, Chapter 23, Section 40-2305 of the Idaho Code; and

WHEREAS, Idaho Code §40-2305(2), requires all PDD's to "obey all traffic and pedestrian control devices and signs"; and

WHEREAS, Idaho Code §40-2305(3), requires a PDD to not "unreasonably interfere with pedestrians or traffic and shall yield the right-of-way to pedestrians on sidewalks and crosswalks."; and

WHEREAS, Idaho Code §40-2305(4), requires all PDD's to have "a plate or marker that identifies the name and contact information of the operator of the personal delivery device and a unique identifying device number."; and

WHEREAS, Idaho Code §40-2305(5), requires all PDD's to be "equipped with a braking system that, when active or engaged, enables the personal delivery device to come to a controlled stop."; and

WHEREAS, Idaho Code §40-2305(6), prohibits all PDD's from transporting "hazardous materials or hazardous wastes that are regulated pursuant to the hazardous materials transportation act, 49 U.S.C. 5101-5128, and require placarding pursuant to subpart F of 49 CFR 172."; and

WHEREAS, Idaho Code §40-2305(7), prohibits all PDD's from operating on a public highway in the state, except on the side or berm of the road or to the extent necessary to cross a crosswalk."; and

WHEREAS, Idaho Code §40-2305(8), prohibits PDD's from operating "on a sidewalk or crosswalk unless the personal delivery device operator is controlling or monitoring the navigation and operation of the personal delivery device."; and

WHEREAS, Permit Holder seeks a permit to operate PDDs to deliver food, groceries, and packages within the City; and

WHEREAS, CITY is willing to authorize use of PDDs, subject to the Terms and Conditions contained herein, and the PDD Permit issued concurrently herewith;

NOW, THEREFORE, based upon the above recitals, which are incorporated into this Agreement, Permit Holder hereby agrees to the following Terms and Conditions of the Permit as follows:

Article I Responsibilities of Permit Holder.

A. Use of Public Space.

Permit Holder shall pay a non-refundable annual license fee as required by CITY, pursuant to a fee set by City Council through a Resolution, for permission to use CITY'S Right of Way as detailed herein.

Pursuant to the Permit, and subject to these Terms and Conditions, Permit Holder is authorized to operate PDDs on sidewalks (and public spaces interconnected to sidewalks), with the limited exception that PDDs are not permitted within the Downtown area during Special Events. CITY shall provide Permit Holder written notice of the dates and times of the Special Events, and the specific area where the PDD's will be prohibited from operating during the Special Event.

B. Compliance with Laws and Terms of Agreement.

Permit Holder shall comply with all applicable federal, state, and local laws, rules, regulations, and this Agreement, and shall obtain all applicable licenses required

for Permit Holder's business operation in CITY and use of the Right of Way. Violation of any terms of this Agreement or of the law is grounds for immediate termination of this Agreement and require immediate removal of deployed devices.

C. Rules and Requirements of Permitted Operations.

Permit Holder may operate PDDs within city limits so long as its PDDs comply with the speed and weight limitations, as described herein, and meet all of the following requirements:

1. No more than thirty (30) PDDs shall be operated simultaneously on the Right of Way; Permit Holder may request permission from CITY to simultaneously operate additional PDDs, said request shall be made in writing to CITY and CITY will approve the request and modify the permit to reflect the additional approved number of PDDs, as long as Permit Holder is not in violation of this Agreement;

2. Each PDD shall be operated in accordance with all laws, ordinances, resolutions, rules, regulations, and this Agreement governing the Right of Way within which the PDD is operated;

3. Each PDD shall be monitored by one or more PDD operator(s) at all times. A "PDD operator" means an employee or agent of the Permit Holder who has the capability to remotely control or monitor the navigation and operation of the PDD. Permit Holder shall maintain a 24-hour hotline to field complaints and requests for immediate removal of devices;

4. Each PDD shall be operated in a safe and non-hazardous manner so as ~~not to~~not to endanger pedestrians, bicyclists, other lawful users of public space, or property. PDDs shall not constitute an impediment to pedestrians with disabilities or mobility restrictions. PDDs shall be maintained, cleaned and repaired to function in a safe manner in accordance with specific manufacturer and customary industry standards. Permit Holder shall exercise its own due diligence in reviewing the safety of CITY's public right of ways to determine its sufficiency for the PDDs;

5. PDDs shall not exceed four~~ten~~ (4~~10~~) miles per hour;

6. Each PDD must yield the right-of-way to all lawful users of the public space, including pedestrians, bicyclists and vehicles;

7. Each PDD must be equipped with all of the following:

i. A marker that clearly identifies the name of Permit Holder, along with the Permit Holder's address and telephone number, as well as a unique identification number for the device;

ii. A system that alerts the PDD operator if a technology failure or loss of communication occurs, and when such an alert is given that:

a. The operator is to assume direct control of the PDDs; and

b. If the operator is unable to assume control of the device, they must cause the PDD to safely come to an off-roadway stop, and remove the PDD from CITY right of way;

iii. A braking system that enables the PDD to come to a controlled stop; and

iv. If the PDD is being operated between sunset and sunrise, a light on both the front and rear of the device is required to be installed that is visible on all sides of the PDD in clear weather from a distance of at least five hundred (500) feet to the front and rear of the PDD when directly in front of low beams of headlights on a motor vehicle.

8. A PDD on public space shall be maintained in good working order, including the following:

i. Any vandalized or otherwise damaged PDD shall be promptly removed from operations, and shall remain out of service until the underlying vandalism or damage has been corrected;

ii. The exterior of the PDD shall be reasonably clean and free of dents, blemishes, and discoloration; and

iii. In the case of a technology failure or other circumstance that causes the PDD to come to a stop in a location other than property owned by the Permit Holder, the Permit Holder shall remove the PDD within twenty-four (24) hours of notice.

9. PDD's are prohibited from being stored and/or parked in CITY rights of way or on CITY property.

10. PDD's are prohibited from being used to deliver alcohol.

D. Reporting to CITY.

1. Permit Holder shall submit a quarterly report to the CITY, upon commencement date of PDD operations. The quarterly report will include the following Public Benefit Measures:

   i. Total number of miles traveled per day, per PDD, number of PDDs deployed, times of deployment and deliveries made by the PDDs within the boundaries of city limits;

   ii. Total number of partnerships that the Permit Holder has entered into with City of Moscow businesses; and

   iii. Estimated reductions in CO_2 emissions in the CITY: a calculation based on personal trips and deliveries that would have been made by traditional combustion engines but were instead made by Permit Holder's PDDs.

2. Incident Reporting

   i. For any alleged incidents involving injury or damage caused by PDDs to an individual, animal or personal/public property about which the Permit Holder is made aware, Permit Holder will promptly conduct an internal investigation via the Permit Holder's Safety team. Upon the conclusion of such investigation, the Permit Holder will promptly provide to CITY a copy of the investigative report and findings, to include details of the location, date and time of the incident, injuries sustained, damage and approximate cost for repair/reimbursement and other relevant data regarding the incident.

   ii. For any alleged departure from city limits or entering the prohibited designated area during Special Events, Permit Holder shall promptly provide to CITY details including the location, date and time and other relevant data regarding the incident.

E. Customer Service.

Permit Holder shall provide a customer service representative from 8 a.m. to 5 p.m. Pacific Time (business hours), seven (7) days per week, fifty-two (52) weeks per year (excluding Federal and locally recognized holidays), at no cost to CITY, for purposes of CITY to communicate with Permit Holder regarding any PDD issues. During non-business hours, Permit Holder's customer service representatives shall maintain a voicemail system and respond to inquiries from CITY within twenty-four (24) hours of request. Permit Holder's customer service representatives shall be competent and knowledgeable about the program in CITY and able to answer questions and provide information including, but not limited to, PDD operations. Permit Holder shall ensure that CITY has current

information on the phone number for the service. The phone number shall be prominently displayed on the PDD.

F. Indemnification.

The following obligations are in addition to those imposed by applicable provisions of CITY's rules and regulations.

Permit Holder agrees to and shall defend (with independent counsel approved by CITY), indemnify and hold harmless CITY, its officers, officials, employees, agents, and volunteers (collectively, "Indemnified Parties") from and against any and all third party claims, demands, actions, losses, damages, injuries, and liability (including all attorney's fees and other litigation expenses) arising out of Permit Holder's (and its officers, officials, employees, agents, consultants, contractors, subcontractors) performance, non-performance, breach, or default under the terms of the PDD Permit, PDD operations, use of the Right of Way, any release or discharge or threatened release or discharge of any Hazardous Material (defined below) caused or allowed by Permit Holder, or from any activity, work, or thing done, permitted, or suffered by Permit Holder in or about the Service Area, which includes all of city limits (collectively, "Permit Holder Actions"). This indemnification obligation shall not apply to demands, actions, losses, damages, injuries, and liability arising out of CITY's sole or active negligence or willful misconduct.

In addition to Permit Holder's obligation to indemnify CITY, Permit Holder specifically acknowledges and agrees that it has an immediate and independent obligation to defend CITY from any claim that actually falls within this indemnity provision even if such allegation is or may be groundless, fraudulent or false, which obligation arises at the time such claim is tendered to Permit Holder by CITY and continues at all times thereafter.

This indemnification obligation shall include, without limitation, attorneys', experts' and consultants' fees and costs, investigation and remediation costs and all other reasonable costs and expenses incurred by the Indemnified Parties.

"Hazardous Materials" means any material that has been designated as hazardous under 49 U.S.C. Sec. 5103.

G. Insurance.

Permit Holder's insurance carrier is required to maintain an A.M. Best rating of not less than "A:VII". Permit Holder shall, at its own expense, procure and maintain in full force at all times during the term hereof the following insurance:

1. Commercial General Liability Coverage. Permit Holder shall maintain commercial general liability insurance written on an occurrence basis, on a

form that provides coverage at least as broad as form ISO CG 00 01, covering the insured with a duty to defend against claims of bodily injury, personal injury and property damage arising out of Permit Holder's activities, assumed liabilities, or use of any CITY property (including, without limitation, sidewalks, crosswalks, public thoroughfares, and rights-of-way) (the "City Property"), including contractual liability coverage for the performance by Permit Holder of the indemnity agreements set forth herein, and coverage for damage to the City Property (including all improvements in Permit Holder's care, custody, or control), for limits of no less than One Million Dollars ($1,000,000) for each occurrence and Two Million Dollars ($2,000,000) annual aggregate limit for bodily injury, personal injury, and One Million Dollars ($1,000,000) annual aggregate for property damage liability.

2. Automobile Liability Insurance. Permit Holder shall maintain automobile liability insurance covering all vehicles used in the performance hereof providing a One Million Dollar ($1,000,000) combined single limit per occurrence for bodily injury, personal injury, and property damage. Coverage shall be applicable to all owned, hired, or non-owned vehicles on the City Property.

3. Compliance with State Workers' Compensation Requirements. Permit Holder covenants that it will insure itself against liability for Workers' Compensation pursuant to the laws of the Commonwealth of Idaho. Permit Holder shall, at all times, upon demand of the CITY, furnish proof that Workers' Compensation Insurance is being maintained by it in force and effect in accordance with the applicable law. The insurer shall also agree to waive all rights of subrogation against the CITY, its officers, officials, employees, agents, and volunteers for losses arising from work performed by Permit Holder for the CITY. Permit Holder shall increase coverage limits upon written demand of the CITY provided that said increases are reasonable and justifiable by CITY.

4. Damage to Permit Holder Property. Permit Holder hereby waives any recovery of damages against CITY (including its employees, officers, directors, agents, or representatives) for loss or damage to any structures, tenant improvements and betterments, fixtures, equipment, and any other personal property, except to the extent arising out of CITY's sole or active negligence or willful misconduct.

5. Other insurance provisions. The policies are to contain, or be endorsed to contain, the following provisions:

i. Additional Insured. CITY, its officers, agents, employees, and volunteers are to be covered as an additional insured with respect to liability arising out of activities performed by or on behalf of Permit Holder and operations of Permit Holder, premises owned, occupied, or used by Permit Holder. The coverage shall contain no special limitations on the scope or protection afforded to CITY, its officers, officials, employees, agents, or volunteers. Except for worker's compensation insurance, the policies mentioned in this subsection shall name CITY as an additional insured and provide for thirty (30) days prior notice to the City of any cancellation or change in coverage. Permit Holder shall also provide timely and prompt notice to CITY if Permit Holder receives any notice of cancellation or nonrenewal from its insurer;

ii. Primary Coverage. Permit Holder's insurance coverage shall be primary insurance with respect to CITY, its officers, officials, employees, agents, and volunteers. Any insurance, risk pooling arrangement, or self-insurance maintained by CITY, its officers, officials, employees, agents, or volunteers shall be in excess of Permit Holder's insurance and shall not contribute with it;

iii. Reporting Provisions. Any failure to comply with the reporting provisions of the policy shall not affect the coverage provided to CITY, its officers, officials, employees, agents, or volunteers; and

iv. Verification of Coverage. Prior to the commencement date of the PDD Permit, Permit Holder shall deliver to CITY certificates of insurance and additional insured policy endorsements from insurers in a form satisfactory to CITY, evidencing the coverages required hereunder.

H. Consideration.

Permit Holder agrees to pay the annual permit fee, which said fee is set by a Fee Resolution passed by the City Council every year.

Article II Reservations of Authority by CITY.

A. Termination.

Notwithstanding anything in these Terms and Conditions to the contrary, CITY may at its sole option freely revoke and terminate the PDD Permit at any time without cause or liability, and without any obligation to pay any consideration to Permit Holder, if CITY determines termination of this Permit is in the best interests of CITY; provided, however, that before any revocation or termination

is effective, Permit Holder is given seventy-two (72) hours to cure the basis for the revocation or termination, if possible. Upon any such termination or revocation, these Terms and Conditions shall automatically terminate, the PDD Permit shall automatically be revoked, and Permit Holder shall immediately stop PDD operations on CITY'S Right of Way.

Notwithstanding the above, Permit Holder shall not be relieved of liability to CITY for damages sustained by CITY by virtue of any breach of this Agreement by Permit Holder or for claims filed during the time period where this Agreement was effective. This provision shall survive the termination of this Agreement and shall not relieve Permit Holder of its liability to CITY for damages, indemnification and insurance coverage as detailed in Article I, Sections F and G above.

B. Relocation or Removal.

If the Permit, or any portion thereof, is found to be in conflict with (a) existing or proposed activities or uses, or (b) with facilities or improvements owned, maintained, or operated by CITY (whether any instances under (a) or (b) known or unknown as of the Date of Permit), then, upon written request of CITY, Permit Holder shall remove and/or relocate the PDD operations in such a way as to eliminate the conflict.

An authorized agent of CITY, may relocate or impound a PDD under circumstances where crowd control or public safety is an immediate concern. A fee of twenty-five ($25) dollars per device will be charged for each day of impoundment. PDDs will be disposed of at CITY's discretion after thirty (30) days of storage. If Permit Holder fails to pay the impound fee for the PDDs, CITY may suspend Permit Holder's Permit until the impound fee has been paid in full.

Article III Effective Date, Term of Permit, and Modifications.

The Permit shall be effective from the date specified on the official Permit and shall remain in effect for one (1) year.

Any modification of the Permit or these Terms and Conditions shall be valid only if approved in writing by CITY.

Article IV Notice and Communications.

Permit Holder acknowledges that all communications and notices required hereunder or by the Permit shall be in writing and mailed postage prepaid by certified or registered first class United States mail, return receipt requested, or by personal delivery to CITY'S address as shown below, or such other places as CITY may, from time to time, designate to Permit Holder in writing.

To City:

City of Moscow
Attention: City Clerk
206 E. Third Street
PO Box 9203
Moscow, ID 83843

To Permit Holder:

Starship Technologies, Inc.
Mr. Ryan Tuohy
Chief Commercial Officer
535 Mission Street, Floor 19
San Francisco, CA 94105
415-637-5304 (cell)
ryan.tuohy@starship.co

Article V General Provisions

A. Independent Contractor

In all matters pertaining to this Agreement, Permit Holder shall be acting as an independent entity, and neither Permit Holder nor any officer, employee or agent of Permit Holder will be deemed an employee of CITY. Permit Holder has no authority or responsibility to exercise any rights or power vested in CITY. The selection and designation of the personnel of CITY in the performance of this Agreement shall be made by CITY.

B. No Joint Venture.

Nothing herein contained shall be in any way construed as expressing or implying that the Parties hereto have joined together in any joint venture or liability company or in a any manner have agreed to or are contemplating the sharing of profits or losses among themselves in relation to any matter relating to this Agreement.

C. Assignment.

It is expressly agreed and understood by the Parties hereto, that Permit Holder shall not have the right to assign, transfer, hypothecate or sell any of its rights under this Agreement except upon the prior express written consent of CITY, provided however that either party may assign this Agreement (i) to any parent, subsidiary or affiliate, or (ii) to a successor to all or substantially all of its business assets or voting securities, whether by sale, merger, or otherwise.

D. Discrimination Prohibited.

DRAFT

In performing the Services appurtenant to a PDD program, Permit Holder shall not unlawfully discriminate in violation of any Federal, State or local law, rule or regulation against any person on the basis of race, color, religion, gender, pregnancy, national origin, ancestry, age, familial status, veteran status, disability, sexual orientation, and/or gender expression/identity, or any other basis prohibited by Federal, State or local law. Permit Holder shall not discriminate against any employee or applicant for employment. Permit Holder's action under this Section shall include, but not be limited to, the following: employment, upgrading, demotion or transfer, recruitment or recruitment advertising, layoff or termination, rates of pay or other forms of compensation and selection for training. Permit Holder agrees to post in conspicuous places, available to employees and other applicants for employment, notices setting forth the provisions of this non-discrimination Section.

E. Public Information.

Pursuant to Idaho Code Section 74-124, *et seq*., information or documents received from Permit Holder may be open to public inspection and copying unless exempt from disclosure. Permit Holder shall clearly designate individual documents as "exempt" on each page of such documents and shall indicate the basis for such exemption. CITY will not accept the marking of an entire document as exempt. In addition, CITY will not accept a legend or statement on one (1) page that all, or substantially all, of the document is exempt from disclosure. Permit Holder shall indemnify and defend the CITY against all liability, claims, damages, losses, expenses, actions, attorney fees and suits whatsoever for honoring such a designation or for Permit Holder's failure to designate individual documents as exempt. Permit Holder's failure to designate as exempt any document or portion of a document that is released by CITY, shall constitute a complete waiver of any and all claims for damages caused by any such release.

F. Changes

CITY may from time to time enact changes to the PDD permit requirements and fees. Such changes shall be incorporated in written amendments to this Agreement and shall be approved by both Parties. If Permit Holder does not accept the PDD permit requirements and fee revisions, that may be grounds for termination of the Permit and this Agreement.

G. Construction and Severability

If any part of this Agreement is held to be invalid or unenforceable, such holding will not affect the validity or enforceability of any other part of this Agreement so long as the remainder of the Agreement is reasonably capable of completion.

H. Advice of Attorney

Each Party warrants and represents that in executing this Agreement, it has received independent legal advice from its attorneys or the opportunity to seek such advice.

I. Entire Agreement

This Agreement contains the entire agreement of the Parties and supersedes any and all other agreements or understandings, oral or written, whether previous to the execution hereof or contemporaneous herewith.

J. Jurisdiction, Venue, and Non-Waiver

It is agreed that this Agreement shall be construed under and governed by the laws of the State of Idaho. In the event of litigation concerning it, it is agreed that proper venue shall be the District Court of the Second Judicial District of the State of Idaho, in and for the County of Latah. Failure of CITY to not exercise any of its rights under this Agreement, or breach thereof, shall not be deemed to be a waiver of such right or a waiver of any subsequent breach. Should any litigation be commenced between the Parties hereto concerning this Agreement, the prevailing Party shall be entitled, in addition to any other relief as may be granted, to court costs and attorneys' fees as determined by a Court.

K. Approval Required

This Agreement shall not become effective or binding until approved by the City of Moscow.

L. Authority to Execute.

The persons executing this Agreement on behalf of their respective Parties, represent and warrant that they have the authority to do so under law and from their respective Parties.

DRAFT

STARSHIP TECHNOLOGIES, INC.		**CITY OF MOSCOW, IDAHO**
Name:	Ryan Tuohy	Arthur D. Bettge
Signature:	_____	_____
Title:	Chief Commercial Officer	Mayor
Date:	_____	_____
		ATTEST:

_____
Laurie M. Hopkins, City Clerk

Approved as to form

_____
Mia Bautista, City Attorney

ACKNOWLEDGMENT

STATE OF)
) ss.
County of _____)

On the _____ day of _____, 2023, before me, the undersigned Notary Public, personally appeared Ryan Tuohy, known to me to be the person whose name is subscribed to the foregoing instrument, and acknowledged to me that he executed the same.

IN WITNESS WHEREOF, I have set my hand and seal the day and year as above written.

_____
Notary Public for
Residing at _____
Commission Expires: _____

DRAFT

CITY COUNCIL STAFF REPORT

DATE: Monday, February 6, 2023

AGENDA ITEM TITLE

Lilly Street Reconstruction 'A' St. to Third St. Rebid - Bid Results & Contract Award - Scott Bontrager

RESPONSIBLE STAFF	REVIEWED BY
Scott Bontrager, City Engineer	This was reviewed by the Public Works/Finance Committee on January 23, 2023, and recommended for approval.

ADDITIONAL PRESENTER(S)	OTHER RESOURCES

DESCRIPTION

The Lilly Street Reconstruction project includes the reconstruction of Lilly Street ('A' St to Third St) and First Street (Lieuallen St to Lilly St). The base bid consists of the full replacement of Lilly Street underground utilities, curb and sidewalk, and full-depth roadway replacement. Also included in the base bid is the realignment and daylighting of Hogg Creek and an extension of the existing pathway system along First Street. The Add Alternate bid consists of the reconstruction of First Street pavement, curb, sidewalk, and the installation of a new water main. The City published an advertisement for bids on December 3, 2022, and the Engineer's Estimate for construction is $1,805,308.40 for Base Bid and $153,093.00 for the Add Alternate.

Bids were opened on January 10, 2023, at which three (3) bids were received. The Base Bids ranged from $1,892,320.25 to $1,969,698.95 and Add Alternate bids ranged from $166,354.66 to $179,609.00. Of those, the lowest responsive bid received was submitted by Big Sky Corporation with a Base Bid of $1,871,406.50 and an Add Alternate bid of $174,237.00. A bid analysis is included in the Committee packet. The Moscow Urban Renewal Agency (MURA) had previously committed $200,000 in project funding in accordance with the Agency's Capital Improvement Plan. Staff has also requested MURA for an additional $200,000 to help with cost escalations since the original funding was committed to the project. This was reviewed by the Public Works/Finance Committee on January 23, 2023, and recommended for approval.

STAFF RECOMMENDATION

Accept the low bid from Big Sky Corporation, award the contract for the base bid in the amount of $1,871,406.50 as well as the bid alternate in the amount of $174,237.00 contingent upon the MURA providing additional $200,000 funds, and authorize staff approval of construction change orders in an amount not to exceed 10% of the contract amount.

PROPOSED ACTIONS

ACTION: Accept the low bid from Big Sky Corporation, award the contract for the base bid in the amount of $1,871,406.50 as well as the bid alternate in the amount of $174,237.00 contingent upon the MURA providing an additional $200,000, and authorize staff approval of construction change orders in an amount not to exceed 10% of the contract amount.

FISCAL IMPACT

Funds for the Lilly Street Reconstruction project would be expended from the Sewer Main Program 330-230-770-45, Water Improvements 320-220-770-73, Streets Roadway Improvement Program 350-150-770-83, and the Stormwater Conveyance Improvements 335-235-770-56. The Moscow Urban Renewal Agency would also be contributing the previously committed $200,000 to the project plus a staff request for an additional $200,000 to cover cost escalations seen since project conception.

PERSONNEL IMPACT

City staff will administer construction contract and inspection.

ATTACHMENTS

1. Lilly Street Reconstruction Rebid - Welch-Comer Bid Analysis
2. Lilly Street Reconstruction 'A' St to Third St Rebid - Construction Agreement _final with attachments

WELCH-COMER
ENGINEERS | SURVEYORS

www.welchcomer.com

O: 208-664-9382
F: 208-664-5946

330 E. Lakeside Avenue, Suite 101
Coeur d'Alene, ID 83814

January 13, 2023

Mr. Scott Bontrager, P.E.
City of Moscow
504 S Washington Street
Moscow, ID 83843

Re: Lilly Street Reconstruction 'A' Street to Third Street Rebid

Dear Mr. Bontrager:

Attached please find the bid summary, bid tabulation and review checklist for the bid which was received at your office for the Lilly Street Reconstruction 'A' Street to Third Street Rebid Project. We have reviewed the bid packages received and they appear to be responsive.

Welch Comer & Associates recommends awarding the Base Bid, in the amount of $1,871,406.50 and Add Alternate 1, in the amount of $174,237.00, for a total award of $2,045,643.50, to the low bidder, Big Sky ID Corp. Should the Council concur with our recommendation, please sign **but do not date**, the attached Notice of Award (attached) and return to our office for immediate processing.

Should you have any questions, please contact our office.

Sincerely,

Matthew Gillis, P.E.
Vice President

Enclosures

MG/lmt

CITY OF MOSCOW
LILLY STREET RECONSTRUCTION 'A' ST. TO THIRD ST.
BID SUMMARY*
Bid Opening 1/10/2023 at 2:15 p.m.

CONTRACTOR	BASE BID	ADD ALT 1	TOTAL
BIG SKY CORP	$ 1,871,406.50	$ 174,237.00	$ 2,045,643.50
LARIVIERE, INC.	$ 1,892,320.25	$ 179,609.00	$ 2,071,929.25
GERMER CONSTRUCTION	$ 1,969,698.95	$ 166,354.66	$ 2,136,053.61

* PLEASE NOTE THAT THIS IS FOR INFORMATION USE ONLY. THE OWNER RESERVES THE RIGHT TO REJECT ANY AND ALL BIDS PURSUANT TO INSTRUCTIONS TO BIDDERS OF THE CONTRACT DOCUMENTS.

CITY OF MOSCOW
LILLY STREET RECONSTRUCTION 'A' ST. TO THIRD ST.
BID TABULATION
Bid Opening 1/10/2023 at 2:15 p.m.

				BIG SKY CORP		LARIVIERE, INC.		GERMER CONSTRUCTION	
Pay Item	Description	Pay Unit	Estimated Quantity	Unit Price	Total Amount	Unit Price	Total Amount	Unit Price	Total Amount
201.4.1.B.1	CLEARING AND GRUBBING	LS	1	$ 1,147.00	$ 1,147.00	$ 10,217.00	$ 10,217.00	$ 9,485.00	$ 9,485.00
201.4.1.C.1	REMOVAL OF OBSTRUCTIONS	LS	1	$ 261.00	$ 261.00	$ 8,796.00	$ 8,796.00	$ 15,000.00	$ 15,000.00
201.4.1.D.1	REMOVAL OF BITUMINOUS SURF	SY	3390	$ 3.00	$ 10,170.00	$ 5.50	$ 18,645.00	$ 5.00	$ 16,950.00
201.4.1.D.2	REMOVAL OF CONC SIDEWALK	SY	860	$ 12.00	$ 10,320.00	$ 13.00	$ 11,180.00	$ 3.25	$ 2,795.00
201.4.1.D.3	REMOVAL OF DRIVEWAY	SY	94	$ 20.00	$ 1,880.00	$ 12.00	$ 1,128.00	$ 32.00	$ 3,008.00
201.4.1.E.1	REMOVAL OF CURB	LF	1530	$ 5.00	$ 7,650.00	$ 8.50	$ 13,005.00	$ 8.00	$ 12,240.00
201.4.1.F.1	REMOVAL OF HYDRANT	EA	1	$ 912.00	$ 912.00	$ 744.00	$ 744.00	$ 1,190.00	$ 1,190.00
201.4.1.F.2	REMOVAL OF EXISTING SIGNS	EA	3	$ 116.00	$ 348.00	$ 418.00	$ 1,254.00	$ 300.00	$ 900.00
201.4.1.F.3	REMOVAL OF CATCH BASIN	EA	6	$ 356.00	$ 2,136.00	$ 566.00	$ 3,396.00	$ 950.00	$ 5,700.00
201.4.1.F.4	REMOVAL OF WATER VAULT	EA	1	$ 866.00	$ 866.00	$ 1,394.00	$ 1,394.00	$ 800.00	$ 800.00
201.4.1.F.5	REMOVAL OF BOX CULVERT	EA	1	$ 8,592.00	$ 8,592.00	$ 21,343.00	$ 21,343.00	$ 13,025.00	$ 13,025.00
201.4.1.F.6	REMOVAL AND REINSTALLATION OF BOLLARDS	EA	2	$ 868.00	$ 1,736.00	$ 859.00	$ 1,718.00	$ 595.00	$ 1,190.00
202.4.1.A.1	EXCAVATION	CY	600	$ 26.00	$ 15,600.00	$ 24.00	$ 14,400.00	$ 16.00	$ 9,600.00
202.4.9.A.1	LANDSCAPE BOULDER	EA	5	$ 131.00	$ 655.00	$ 102.00	$ 510.00	$ 250.00	$ 1,250.00
401.4.1.A.1	WATER MAIN PIPE, 8" C900 DR18	LF	525	$ 187.00	$ 98,175.00	$ 102.00	$ 53,550.00	$ 185.50	$ 97,387.50
402.4.1.A.1	MANUAL AIR RELEASE STATION	EA	2	$ 3,455.00	$ 6,910.00	$ 6,270.00	$ 12,540.00	$ 4,005.00	$ 8,010.00
403.4.1.A.1	HYDRANT	EA	2	$ 9,980.00	$ 19,960.00	$ 7,635.00	$ 15,270.00	$ 8,795.00	$ 17,590.00
404.4.1.A.1	WATER SERVICE CONNECTION, 1"	EA	20	$ 5,275.00	$ 105,500.00	$ 2,748.00	$ 54,960.00	$ 4,115.00	$ 82,300.00
405.4.1.A.1	POTABLE WATERLINE CASING - 2", TYPE SCHEDULE 80	LF	170	$ 12.00	$ 2,040.00	$ 15.00	$ 2,550.00	$ 12.65	$ 2,150.50
405.4.1.A.2	POTABLE WATERLINE CASING - 8", TYPE C900 DR25	LF	120	$ 62.00	$ 7,440.00	$ 43.00	$ 5,160.00	$ 75.35	$ 9,042.00
405.4.1.A.3	POTABLE WATERLINE CASING - 16", TYPE C900 DR25	LF	60	$ 235.00	$ 14,100.00	$ 131.00	$ 7,860.00	$ 189.00	$ 11,340.00
405.4.1.A.4	POTABLE WATERLINE CASING - 16", TYPE STEEL	LF	20	$ 299.00	$ 5,980.00	$ 78.00	$ 1,560.00	$ 218.00	$ 4,360.00
501.4.1.B.1	GRAVITY SEWER PIPE SIZE - 8" TYPE ASTM D3034	LF	790	$ 120.00	$ 94,800.00	$ 76.00	$ 60,040.00	$ 165.00	$ 130,350.00
502.4.1.A.1	SANITARY SEWER MANHOLE - 48" STANDARD	EA	5	$ 5,246.00	$ 26,230.00	$ 4,540.00	$ 22,700.00	$ 7,670.00	$ 38,350.00
502.4.1.A.2	SANITARY SEWER MANHOLE - DOGHOUSE	EA	2	$ 8,758.00	$ 17,516.00	$ 9,890.00	$ 19,780.00	$ 6,030.00	$ 12,060.00
504.4.1.B.1	SEWER SERVICE LINE - 4"	EA	14	$ 2,526.00	$ 35,364.00	$ 1,833.00	$ 25,662.00	$ 2,425.00	$ 33,950.00
507.4.1.H.1	REMOVE MANHOLE	EA	6	$ 2,334.00	$ 14,004.00	$ 977.00	$ 5,862.00	$ 2,900.00	$ 17,400.00
601.4.1.A.5	10" STORM PIPE PVC ASTM D3034	LF	15	$ 171.00	$ 2,565.00	$ 50.00	$ 750.00	$ 300.00	$ 4,500.00
601.4.1.B.5	12" STORM PIPE PVC ASTM D3034	LF	148	$ 93.00	$ 13,764.00	$ 62.00	$ 9,176.00	$ 133.00	$ 19,684.00
601.4.1.A.15	54" CULVERT CORRUGATED ALUMINIZED STEEL	LF	220	$ 299.00	$ 65,780.00	$ 334.00	$ 73,480.00	$ 270.00	$ 59,400.00
601.4.1.B.5	12" C900 STORM PIPE	LF	80	$ 157.00	$ 12,560.00	$ 80.00	$ 6,400.00	$ 212.00	$ 16,960.00
602.4.1.F.1	CATCH BASIN	EA	8	$ 2,399.00	$ 19,192.00	$ 2,651.00	$ 21,208.00	$ 2,670.00	$ 21,360.00
704.4.1.B.1	BOX CULVERT	LF	66	$ 2,131.00	$ 140,646.00	$ 2,647.00	$ 174,702.00	$ 2,200.00	$ 145,200.00
704.4.1.D.1	CONCRETE BOX CULVERT ELBOW	EA	1	$ 63,787.00	$ 63,787.00	$ 54,499.00	$ 54,499.00	$ 65,350.00	$ 65,350.00
704.4.1.D.2	PRECAST CONCRETE HEADWALL	EA	1	$ 16,477.00	$ 16,477.00	$ 14,269.00	$ 14,269.00	$ 29,665.00	$ 29,665.00
705.4.1.A.1	PORTLAND CEMENT CONCRETE PAVEMENT, CLASS 4000A	SY	64	$ 294.00	$ 18,816.00	$ 180.00	$ 11,520.00	$ 144.00	$ 9,216.00
706.4.1.A.3	VERTICAL CURB - TYPE A	LF	283	$ 46.00	$ 13,018.00	$ 58.00	$ 16,414.00	$ 40.40	$ 11,433.20
706.4.1.A.5	CURB & GUTTER - TYPE B	LF	1668	$ 34.00	$ 56,712.00	$ 30.00	$ 50,040.00	$ 34.55	$ 57,629.40
706.4.1.A.11	ROLLED CURB - TYPE C	LF	198	$ 47.00	$ 9,306.00	$ 44.00	$ 8,712.00	$ 44.00	$ 8,712.00
706.4.1.E.1	CONCRETE SIDEWALK, 5"	SY	1100	$ 103.00	$ 113,300.00	$ 66.00	$ 72,600.00	$ 73.50	$ 80,850.00
706.4.1.E.2	CONCRETE SIDEWALK, 6"	SY	110	$ 158.00	$ 17,380.00	$ 117.00	$ 12,870.00	$ 129.75	$ 14,272.50
706.4.1.F.1	CONCRETE DRIVEWAY APPROACH	SY	270	$ 124.00	$ 33,480.00	$ 149.00	$ 40,230.00	$ 98.35	$ 26,554.50

				BIG SKY CORP		LARIVIERE, INC.		GERMER CONSTRUCTION	
Pay Item	Description	Pay Unit	Estimated Quantity	Unit Price	Total Amount	Unit Price	Total Amount	Unit Price	Total Amount
706.4.1.H.1	PEDESTRIAN RAMP w/ DETECTABLE WARNING DOMES	SY	84	$ 261.00	$ 21,924.00	$ 210.00	$ 17,640.00	$ 590.00	$ 49,560.00
801.4.1.B.1	1" MINUS UNCRUSHED AGGREGATE	TON	32	$ 42.00	$ 1,344.00	$ 70.00	$ 2,240.00	$ 33.50	$ 1,072.00
802.4.1.B.1	CRUSHED AGGREGATE FOR BASE TYPE I	TON	1730	$ 38.00	$ 65,740.00	$ 31.00	$ 53,630.00	$ 33.50	$ 57,955.00
802.4.1.B.2	CRUSHED AGGREGATE FOR BASE, 1-1/4"(-)	TON	670	$ 33.00	$ 22,110.00	$ 31.00	$ 20,770.00	$ 33.50	$ 22,445.00
810.4.1.A.5	SUPERPAVE HMA, CLASS SP-3, 1/2" AGG	TON	660	$ 172.00	$ 113,520.00	$ 160.00	$ 105,600.00	$ 187.50	$ 123,750.00
901.4.1.C.1	PRESSURE IRRIGATION SYSTEM MODIFICATIONS	CA	15000	$ 1.00	$ 15,000.00	$ 1.00	$ 15,000.00	$ 1.00	$ 15,000.00
1001.4.2.B.1	STABILIZED CONSTRUCTION ENTRANCE	EA	1	$ 2,035.00	$ 2,035.00	$ 4,735.00	$ 4,735.00	$ 2,200.00	$ 2,200.00
1005.4.1.I.1	FIBER WATTLE	LF	100	$ 12.00	$ 1,200.00	$ 7.50	$ 750.00	$ 25.00	$ 2,500.00
1006.4.1.C.1	INLET PROTECTION	EA	28	$ 86.00	$ 2,408.00	$ 237.00	$ 6,636.00	$ 365.00	$ 10,220.00
1007.4.1.A.1	TOPSOIL	CY	40	$ 83.00	$ 3,320.00	$ 108.00	$ 4,320.00	$ 91.50	$ 3,660.00
1007.4.1.B.1	SEEDING	SF	6425	$ 0.30	$ 1,927.50	$ 0.25	$ 1,606.25	$ 1.21	$ 7,774.25
1007.4.1.C.1	SODDING	SY	100	$ 46.00	$ 4,600.00	$ 23.00	$ 2,300.00	$ 9.80	$ 980.00
1102.4.1.I.1	LIGHTED BOLLARDS	EA	6	$ 3,840.00	$ 23,040.00	$ 8,362.00	$ 50,172.00	$ 8,175.00	$ 49,050.00
1103.4.1.A.1	CONSTRUCTION TRAFFIC CONTROL	LS	1	$ 17,679.00	$ 17,679.00	$ 112,500.00	$ 112,500.00	$ 88,000.00	$ 88,000.00
2010.4.1.A.1	MOBILIZATION	LS	1	$ 181,000.00	$ 181,000.00	$ 245,675.00	$ 245,675.00	$ 95,322.00	$ 95,322.00
2050.4.1.C.1	SUBGRADE SEPARATION GEOTEXTILE	SY	3210	$ 3.00	$ 9,630.00	$ 2.50	$ 8,025.00	$ 2.96	$ 9,501.60
SP 1.4.1.A.1	CONSTRUCTION SURVEY	LS	1	$ 31,015.00	$ 31,015.00	$ 34,133.00	$ 34,133.00	$ 23,145.00	$ 23,145.00
SP 6.4.1.A.1	SWPPP MANAGEMENT	LS	1	$ 2,337.00	$ 2,337.00	$ 6,000.00	$ 6,000.00	$ 17,185.00	$ 17,185.00
SP 7.4.1.A.1	ORNAMENTAL FENCE	LF	364	$ 87.00	$ 31,668.00	$ 117.00	$ 42,588.00	$ 109.00	$ 39,676.00
ALTA SP-1	CHANNEL	LF	290	$ 103.00	$ 29,870.00	$ 112.00	$ 32,480.00	$ 76.50	$ 22,185.00
ALTA SP-2	CONCRETE BLOCK RETAINING WALL	SFF	2356	$ 52.00	$ 122,512.00	$ 49.00	$ 115,444.00	$ 58.50	$ 137,826.00
ALTA SP-3	REVEGETATION PLANTING	SF	4400	$ 3.00	$ 13,200.00	$ 4.00	$ 17,600.00	$ 4.00	$ 17,600.00
ALTA SP-4	REVEGETATION SEEDING AND MULCHING	SF	4390	$ 0.70	$ 3,073.00	$ 0.80	$ 3,512.00	$ 0.75	$ 3,292.50
ALTA SP-5	WATER MANAGEMENT	LS	1	$ 28,759.00	$ 28,759.00	$ 17,270.00	$ 17,270.00	$ 23,590.00	$ 23,590.00
ALTA SP-6	PROVIDE WATER	DAYS	60	$ 257.00	$ 15,420.00	$ 160.00	$ 9,600.00	$ 300.00	$ 18,000.00
					$ 1,871,406.50		**$ 1,892,320.25**		**$ 1,969,698.95**

	Add Alternate 1: First St.			BIG SKY CORP		LARIVIERE, INC.		GERMER CONSTRUCTION	
	Description	Pay Unit	Estimated Quantity	Unit Price	Total Amount	Unit Price	Total Amount	Unit Price	Total Amount
201.4.1.D.2	REMOVAL OF CONC SIDEWALK	SY	106	$ 14.00	$ 1,484.00	$ 12.00	$ 1,272.00	$ 14.00	$ 1,484.00
202.4.1.A.1	EXCAVATION	CY	470	$ 31.00	$ 14,570.00	$ 14.00	$ 6,580.00	$ 15.85	$ 7,449.50
401.4.1.A.1	WATER MAIN PIPE, 8" C900 DR18	LF	285	$ 96.00	$ 27,360.00	$ 69.00	$ 19,665.00	$ 105.00	$ 29,925.00
403.4.1.A.1	HYDRANT	EA	1	$ 10,821.00	$ 10,821.00	$ 8,100.00	$ 8,100.00	$ 10,625.00	$ 10,625.00
404.4.1.A.1	WATER SERVICE CONNECTION, 1"	EA	3	$ 5,540.00	$ 16,620.00	$ 2,440.00	$ 7,320.00	$ 4,115.00	$ 12,345.00
405.4.1.A.3	POTABLE WATERLINE CASING - 16", TYPE C900 DR25	LF	20	$ 203.00	$ 4,060.00	$ 131.00	$ 2,620.00	$ 189.00	$ 3,780.00
706.4.1.A.5	CURB & GUTTER - TYPE B	LF	269	$ 33.00	$ 8,877.00	$ 49.00	$ 13,181.00	$ 40.85	$ 10,988.65
706.4.1.E.1	CONCRETE SIDEWALK, 5"	SY	150	$ 66.00	$ 9,900.00	$ 117.00	$ 17,550.00	$ 77.75	$ 11,662.50
802.4.1.B.1	CRUSHED AGGREGATE FOR BASE TYPE I	TON	242	$ 55.00	$ 13,310.00	$ 27.00	$ 6,534.00	$ 33.50	$ 8,107.00
802.4.1.B.2	CRUSHED AGGREGATE FOR BASE, 1-1/4"(-)	TON	157	$ 40.00	$ 6,280.00	$ 31.00	$ 4,867.00	$ 33.50	$ 5,259.50
810.4.1.A.5	SUPERPAVE HMA, CLASS SP-3, 1/2" AGG	TON	157	$ 187.00	$ 29,359.00	$ 160.00	$ 25,120.00	$ 262.75	$ 41,251.75
1006.4.1.C.1	INLET PROTECTION	EA	1	$ 86.00	$ 86.00	$ 237.00	$ 237.00	$ 365.00	$ 365.00
2010.4.1.A.1	MOBILIZATION	LS	1	$ 19,450.00	$ 19,450.00	$ 36,730.00	$ 36,730.00	$ 7,500.00	$ 7,500.00
2050.4.1.C.1	SUBGRADE SEPARATION GEOTEXTILE	SY	756	$ 3.00	$ 2,268.00	$ 2.00	$ 1,512.00	$ 2.96	$ 2,237.76
SP 1.4.1.A.1	CONSTRUCTION SURVEY	LS	1	$ 6,203.00	$ 6,203.00	$ 20,712.00	$ 20,712.00	$ 2,200.00	$ 2,200.00
SP 4.4.1.A.1	RETAINING WALL - SMALL	SF	46	$ 37.00	$ 1,702.00	$ 100.00	$ 4,600.00	$ 126.50	$ 5,819.00
SP 4.4.1.A.2	REMOVE AND RESET RETAINING WALL	SF	51	$ 37.00	$ 1,887.00	$ 59.00	$ 3,009.00	$ 105.00	$ 5,355.00
					$ 174,237.00		**$ 179,609.00**		**$ 166,354.66**
					$ 2,045,643.50		**$ 2,071,929.25**		**$ 2,136,053.61**

BID REVIEW CHECKLIST
PRIOR TO RECOMMENDATION

OWNER: CITY OF MOSCOW

PROJECT: LILLY STREET RECONSTRUCTION 'A' ST. TO THIRD ST.

Open Date: January 10, 2023 at 2:15 p.m.

Bid Review Performed By: Lina Turner

CONTRACTOR	BIG SKY CORP	LARIVIERE, INC.	GERMER CONSTRUCTION
BID AMOUNT (Basis of Bid Award)	$ 2,045,643.50	$ 2,071,929.25	$ 2,136,053.61
PUBLIC WORKS LICENSE NO.	002207	PWC-C-17425	PWC-C-11359
License Limit (See List)	Unlimited	Unlimited	$5,000,000
License Confirmed with the License Board at www.dbs.idaho.gov	Yes	Yes	Yes
BID PACKAGE			
Are all forms filled out completely and correctly?	Yes	Yes	Yes
ALL ADDENDA ACKNOWLEDGED?	Yes	Yes	Yes
BID PROPOSAL FORM	Yes	Yes	Yes
BID SCHEDULE	Yes	Yes	Yes
FORM OF BID SECURITY	Bond	Bond	Bond
Surety Company Confirmed at www.fms.treas.gov/c570/index.html ?	Yes	Yes	Yes
LIST OF SUBCONTRACTORS	Yes	Yes	Yes
PLUMBING		Not Required	
HVAC/BOILER		Not Required	
ELECTRICAL	Shannon Industrial	Gropp LLC	Gropp Heating, Air & Electric LLC

NOTICE OF AWARD

Date of Issuance:			
Owner:	City of Moscow	Owner's Project No.:	
Engineer:	Welch Comer Engineers	Engineer's Project No.:	46016.01
Project:	Lilly Street Reconstruction 'A' Street to Third Street Rebid		
Contract Name:			
Bidder:	Big Sky ID Corp		
Bidder's Address:	10063 Navion Drive, Hayden, ID 83835		

You are notified that Owner has accepted your Bid dated **January 10, 2023,** for the above Contract, and that you are the Successful Bidder and are awarded a Contract for:

Base Bid: Reconstruction of Lilly Street, from State Highway 8 to "A" Street.

Add Alternate 1: Reconstruction of First Street, from Lieuallen Street to Lilly Street.

The Contract Price of the awarded Contract is **$2,045,643.50**. Contract Price is subject to adjustment based on the provisions of the Contract, including but not limited to those governing changes, Unit Price Work, and Work performed on a cost-plus-fee basis, as applicable.

One unexecuted counterpart of the Agreement accompanies this Notice of Award, and one copy of the Contract Documents has been transmitted or made available to Bidder electronically.

You must comply with the following conditions precedent within 15 days of the date of receipt of this Notice of Award:

1. Deliver to Owner one counterpart of the Agreement, signed by Bidder (as Contractor).
2. Deliver with the signed Agreement(s) the Contract security (such as required performance and payment bonds) and insurance documentation, as specified in the Instructions to Bidders and in the General Conditions, Articles 16 and 17.

Failure to comply with these conditions within the time specified will entitle Owner to consider you in default, annul this Notice of Award, and declare your Bid security forfeited.

Within 10 days after you comply with the above conditions, Owner will return to you one fully signed counterpart of the Agreement, together with any additional copies of the Contract Documents as indicated in Paragraph 2.02 of the General Conditions.

Owner: **City of Moscow**

By *(signature)*: _____

Name *(printed)*: _____

Title: _____

Copy: Engineer

Copyright© 2018 National Society of Professional Engineers, American Council of Engineering Companies, and American Society of Civil Engineers. All rights reserved.

CONSTRUCTION AGREEMENT
FOR LILLY STREET RECONSTRUCTION 'A' ST. TO THIRD ST. REBID
BETWEEN CITY OF MOSCOW, IDAHO
AND BIG SKY ID, CORP.

THIS CONSTRUCTION AGREEMENT FOR LILLY STREET RECONSTRUCTION 'A' ST. TO THIRD ST. REBID BETWEEN CITY OF MOSCOW, IDAHO, AND BIG SKY ID, CORP. (hereinafter "Agreement"), dated this ____ day of _____, 2023, by and between City of Moscow, Idaho, a municipal corporation of the State of Idaho, 206 East Third Street, Moscow, Idaho, 83843 (hereinafter "CITY"), and Big Sky ID, Corp. 10063 N Navion Drive, Hayden, ID 83835 (hereinafter "CONTRACTOR"):

W I T N E S S E T H:

WHEREAS, pursuant to the invitation of CITY, extended through an "Invitation to Bid" see Attachment 'A', CONTRACTOR submitted a Bid Proposal containing an offer invited by said invitation; and

WHEREAS, CITY has determined that said offer was the lowest responsive Bid Proposal; and

WHEREAS, CITY has accepted CONTRACTOR's Bid Proposal;

NOW THEREFORE, the Parties to this Agreement, in consideration of the mutual covenants and stipulations set out, agree as follows:

ARTICLE 1.
CONTRACT DOCUMENTS

The Contract Documents which comprise the entire Agreement between CITY and CONTRACTOR concerning the work to be performed, are this Agreement, pages one (1) through six (6), and the following:

1. Drawings, Specifications and Proposal, Attachment 'A' for: Lilly Street Reconstruction 'A' St. to Third St. Rebid**,** consisting of 335 pages;
2. Bid Proposal of CONTRACTOR, dated January 23, 2023, see Attachment 'B', consisting of 24 pages;
3. Performance and Payment Bonds and Insurance Certificates;
4. Addenda, if applicable, Attachment 'C', consisting of 33 pages; and
5. Change Orders, which may be delivered or issued after the effective date of this Agreement.

There are no Contract Documents other than those listed in Article 1. This Agreement may only be amended by change order as provided in the General Conditions of Attachment 'A'.

ARTICLE 2.
WORK

CONTRACTOR shall complete the entire work as specified, indicated and required under the Contract Documents, contained herein under Article 1. for CITY project (hereinafter "Project") titled:

"Lilly Street Reconstruction 'A' St. to Third St. Rebid"

ARTICLE 3.
CONTRACT TIME/SUBSTANTIAL COMPLETION

The work to be performed pursuant to this Agreement shall start no earlier than May 15, 2023 and shall be substantially complete on or before September 15, 2023. The work shall be completed within one hundred twenty (120) calendar days from the commencement of work, unless adjustment of the Agreement time is made in accordance with the provisions of the Contract Documents. CONTRACTOR shall begin work in conformance with the Contract Documents.

CONTRACTOR and CITY recognize that time is of the essence and that CITY will suffer financial loss if the Project is not completed within the time specified above, unless approved extensions thereof are permitted in accordance with Article 12 of the General Conditions. The Parties also recognize the delays, expense, and difficulties involved in proving, in a legal or arbitration proceeding, the actual loss suffered by CITY if the Project is not completed on time. Accordingly, instead of requiring any such proof, CITY and CONTRACTOR agree that as liquidated damages for delay (but not as a penalty), CONTRACTOR shall pay CITY Three Thousand Dollars ($3,000) for each day that expires after the time specified above for Substantial Completion until the Project is substantially complete. After Substantial Completion, if CONTRACTOR shall neglect, refuse, or fail to complete the remaining Project within the Time of Completion or by any proper extension thereof granted by CITY, CONTRACTOR shall pay CITY Three Thousand Dollars ($3,000) for each day that expires after the time specified above for completion, until the Project is completed and ready for final payment.

ARTICLE 4.
CONTRACT SUM

CITY shall pay CONTRACTOR for completion of the Work in accordance with the Contract Documents in current funds in the amount of Two Million Forty-Five Thousand Six Hundred Forty-Three Dollars and Fifty Cents ($2,045,643.50), as submitted by CONTRACTOR. In no event shall Contract amount exceed CONTRACTOR's bid amount of Two Million Forty-Five Thousand Six Hundred Forty-Three Dollars and Fifty Cents ($2,045,643.50), unless otherwise authorized by CITY by written agreement. Said Contract Sum shall be paid in accordance with the Contract Documents.

ARTICLE 5.
INDEPENDENT CONTRACTOR

The Parties warrant by their signatures that no employer-employee relationship is established between CONTRACTOR and CITY by the terms of this Agreement. It is understood by the Parties

hereto that CONTRACTOR is an independent contractor and, as such, neither CONTRACTOR nor CONTRACTOR's employees, agents, representatives or subcontractors, if any, are employees of CITY for purposes of tax, retirement system, or social security (FICA) withholding.

ARTICLE 6.
SCOPE OF SERVICES

CONTRACTOR shall perform all work required by the Contract Documents. All work shall be completed in accordance with the specifications and plans established for this Project.

ARTICLE 7.
HOLD HARMLESS/INDEMNIFICATION

In addition to other rights granted CITY by the Contract Documents, CONTRACTOR agrees to indemnify, defend, and hold harmless CITY, its officers, agents, employees, and engineers, from and against any and all losses, lawsuits, actions, claims, judgements for damages, or any injuries or damages received or sustained by any person, persons, or property, and losses, expenses, and other costs, including litigation costs and attorney's fees, arising out of, resulting from, or in connection with the acts and/or any performances, activities, errors or omissions by CONTRACTOR, CONTRACTOR's servants, agents, officers, employees, representatives, guests, business invitees or its subcontractors; or on account of or in consequence of any neglect in safeguarding the work; or through use of unacceptable materials in constructing the work; or because of any claims or amounts recovered from any infringements of patent, trademark or copyright; or from any claims or amounts arising out of or recovered under the Workmen's Compensation Act or any other law, ordinance, order, or decree.

ARTICLE 8.
CONFLICT OF INTEREST

CONTRACTOR covenants that it presently has no interest and will not acquire any interest, direct or indirect, in the Project, which would conflict in any manner or degree with the performance of CONTRACTOR's services hereunder. CONTRACTOR further covenants that, in performing this Agreement, CONTRACTOR will employ no person who has any such interest. Should any conflict of interest arise during the performance of this Agreement, CONTRACTOR shall immediately disclose such conflict to the CITY.

ARTICLE 9.
ENTIRE AGREEMENT, MODIFICATION AND ASSIGNABILITY

This Agreement and the exhibits hereto contain the entire Agreement between the Parties, and no statements, promises, or inducements made by either Party, or agents of either Party are valid or binding unless contained herein. This Agreement may not be enlarged, modified or altered except upon written agreement signed by the Parties hereto. CONTRACTOR may not subcontract or assign its rights (including the right to compensation) or duties arising hereunder, other than as provided within the Contract Documents, without the prior written consent and express authorization of CITY.

ARTICLE 10.
LICENSES AND ADHERENCE TO LAW REQUIRED

CONTRACTOR represents that he possesses the skill and experience necessary and all licenses required to perform the services under this Agreement. CONTRACTOR further agrees to comply with all applicable Federal, State and Local statutes and regulations in the performance of the services hereunder, and are hereby made a part of this Agreement and shall be adhered to at all times. Violation of any of these statutes or regulations by CONTRACTOR shall be deemed material and shall subject CONTRACTOR to termination of this Agreement for cause. No pleas of misunderstanding or ignorance on the part of CONTRACTOR will, in any way, serve to modify the provisions of this requirement. CONTRACTOR and its surety shall indemnify, defend and hold harmless CITY and its employees, agents, engineers and representatives against any claim or liability arising from or based on the violation of any such laws, codes, ordinances, or regulations, whether by CONTRACTOR, CONTRACTOR's employees, or its subcontractors.

Anti-Boycott Against Israel Act. CONTRACTOR certifies it is not currently engaged in, and will not for the duration of the Agreement engage in, a boycott of goods and services from Israel or territories under its control. Failure to comply with I.C. 67-2346 will result in this Agreement being void as against public policy.

ARTICLE 11.
EMPLOYMENT DISCRIMINATION

It is illegal under the U.S. Federal law to discriminate against an employee, either intentionally or through disparate impact, on account of race, color, gender, religion, sex (including pregnancy), national origin, physical or mental disability, age, marital or familial status, sexual orientation, and gender expression or identity. CONTRACTOR shall not discriminate against any employee or applicant for employment. CONTRACTOR's action under this Section shall include, but not be limited to, the following: employment, upgrading, demotion or transfer, recruitment or recruitment advertising, layoff or termination, rates of pay or other forms of compensation and selection for training, including apprenticeship. CONTRACTOR agrees to post in conspicuous places, available to employees and other applicants for employment, notices setting forth the provisions of this non-discrimination Section.

ARTICLE 12.
LEGAL FEES

In the event either Party incurs legal expenses to enforce the terms and conditions of this Agreement, the prevailing Party is entitled to recover attorney's fees and other costs and expenses, whether the same are incurred with or without a lawsuit.

ARTICLE 13.
JURISDICTION, VENUE AND NONWAIVER

It is agreed that this Agreement shall be construed under and governed by the laws of the State of Idaho. In the event of litigation concerning it, it is agreed that proper venue shall be the District Court of the Second Judicial District of the State of Idaho, in and for the County of Latah. Failure

of CITY to exercise any of the rights under this Agreement, or breach thereof, shall not be deemed to be a waiver of such right or a waiver of any subsequent breach.

ARTICLE 14.
SPECIAL WARRANTY

CONTRACTOR warrants that nothing of monetary value has been given, promised or implied as remuneration or inducement to enter into this Agreement. CONTRACTOR declares that no improper personal, political or social activities have been used or attempted in an effort to influence the outcome of the competition, discussion, or negotiation leading to the award of this Agreement. Any such activity by CONTRACTOR shall make this Agreement null and void. CONTRACTOR further warrants that all materials and goods supplied under this Agreement shall be of good merchantable quality and that all services will be performed in a good workmanlike manner. CONTRACTOR acknowledges that it will be liable for any breach of this warranty.

ARTICLE 15.
COMMUNICATIONS

Such communications as are required by this Agreement shall be satisfied by mailing or by personal delivery to the Parties at the following address:

CONTRACTOR:	CITY:
Big Sky ID, Corp. Jeremy Tripp 10063 N Navion Drive Hayden, ID 83835	City of Moscow Engineering Division 206 East Third Street Moscow, Idaho 83843

ARTICLE 16.
NON-APPROPRIATIONS

This Agreement is contingent upon CITY receiving the necessary funding to cover the obligations of CITY. In the event that such funding is not received or appropriated, then, and in that event, CITY's obligations under this Agreement shall cease and each Party shall be released from further performance under this Agreement without any liability to the other Party, and CONTRACTOR shall be entitled to receive just and equitable compensation for any work satisfactorily completed hereunder.

ARTICLE 17.
APPROVAL REQUIRED AND SEVERABILITY

This Agreement shall not become effective or binding until approved by CITY. If any part of this Agreement is held unenforceable, the remaining portions of the Agreement will, nevertheless, remain in full force and effect.

ARTICLE 18.
EXECUTION

IN WITNESS WHEREOF, said CONTRACTOR and CITY have caused this Agreement to be executed on the day and year first above written.

I, Jeremy Tripp, certify under penalty of perjury pursuant to the law of the State of Idaho, that I am an authorized agent to bind Big Sky ID, Corp. to this Agreement.

CONTRACTOR:

Big Sky ID, Corp.

_____

By: Jeremy Tripp

CITY:

City of Moscow, Idaho

_____

Arthur D. Bettge, Mayor

ATTEST:

_____

Laurie M. Hopkins, City Clerk

Approved as to Form:

_____

Mia Bautista, City Attorney

ACKNOWLEDGMENT

STATE OF _____)
) ss.
COUNTY OF _____)

On this _____ day of _____, 2023, before me, a Notary Public in and for said State, appeared Jeremy Tripp, known to me to be the person named above and acknowledged that they executed the foregoing document as the duly authorized representative for Big Sky ID, Corp..

_____
Notary Public for the State of _____
Residing at_____
My commission expires_____

COMMUNITY DEVELOPMENT ENGINEERING DIVISION

DRAWINGS, SPECIFICATIONS AND PROPOSAL FOR:

Lilly Street Reconstruction
'A' St. to Third St.

CITY OF MOSCOW PROJECT NO. 108-019
DESIGN ENGINEER PROJECT NO. 46016.01

CITY OF MOSCOW, IDAHO

Community Development
Engineering Division
504 S Washington Street
(208) 883-7034

Plans, Specifications and Proposal

For

Lilly Street Reconstruction 'A' St. to Third St. - Rebid

CITY OF MOSCOW PROJECT NO. 108-019

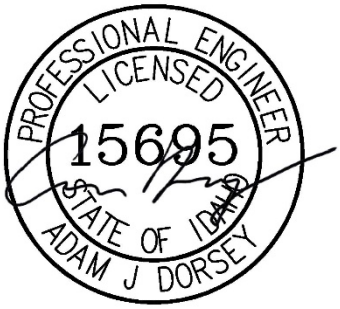

ADAM J. DORSEY, P.E.

WELCH-COMER
ENGINEERS | SURVEYORS

330 E. Lakeside Avenue, Suite 101

Coeur d'Alene, Idaho 83814
(208) 664-9382 • (208) 664-5946 Fax

TABLE OF CONTENTS

SECTION 1 ..... **8**
BIDDING INFORMATION AND DOCUMENTS **8**
INVITATION TO BID **9**
BID PROPOSAL **10**
CONSTRUCTION AGREEMENT **16**
INSTRUCTION TO BIDDERS **22**
IB-1. INTENT OF PLANS AND SPECIFICATIONS 22
IB-2. PLANS, SPECIFICATIONS, AND ADDITIONAL INFORMATION 22
IB-3. EXAMINATION OF PLANS, SPECIFICATIONS, AND SITE 22
IB-4. PREPARATION AND DELIVERY OF PROPOSAL 22
IB-5. PROPOSAL GUARANTY 23
IB-6. RETURN OF PROPOSAL GUARANTY 23
IB-7. QUALIFICATIONS OF BIDDER 23
IB-8. AWARD OF CONTRACT 24
IB-9. FAILURE TO EXECUTE CONTRACT 24
IB-10. NONDISCRIMINATION IN EMPLOYMENT 25
IB-11. WAGE RATES 25
IB-12. CONTRACTOR FOR PUBLIC WORKS TO PAY OR SECURE TAXES AGREEMENT 25
IB-13. PERFORMANCE PERIOD 26
IB-14. CONSIDERATION OF MULTIPLE DIVISIONS OF WORK 26
IB-15. ALTERNATES 26
IB-16. SUBCONTRACTORS TO BE LISTED ON BID 26
SECTION 2 ..... **28**
GENERAL CONDITIONS **29**
GC-1. COMPLIANCE 29
GC-2. DEFINITIONS 29
GC-3. PLANS AND SPECIFICATIONS AND ADDITIONAL DRAWINGS 30
GC-4. ALTERATION OR MODIFICATION OF CONTRACT DOCUMENTS 31
GC-5. INVESTIGATION BY BIDDERS 31
GC-6. NON-DISCRIMINATION 31
GC-7. INTERPRETATION OF THE SPECIFICATIONS 32
GC-8. CONTRACTS 32
GC-9. QUANTITIES FURNISHED BIDDERS 36
GC-10. MAJOR CHANGES 37
GC-11. EXTRA WORK 37
GC-12. MONTHLY PAYMENTS 38
GC-13. TIME OF COMPLETION/LIQUIDATED DAMAGES 39
GC-14. ABANDONMENT OF WORK 41
GC-15. AUTHORITY OF ENGINEER 41
GC-16. PERFORMANCE AND PAYMENT BONDS 42
GC-17. INSURANCE/CITY TO BE NAMED AS ADDITIONAL INSURED 43
GC-18. PATENT ROYALTIES AND PROCESS FEES 44
GC-19. CONTRACTOR RESPONSIBLE FOR WORK 44
GC-20. USE OF COMPLETED PORTION 45
GC-21. SIGNATURES 45
GC-22. ORDERS TO BEGIN WORK 46
GC-23. ORDER OF WORK 46
GC-24. EFFICIENCY OF OPERATION/LICENSING 46
GC-25. PROTECTION OF WORK AND PROPERTY 46
GC-26. RESPONSIBILITY FOR SAFETY 47
GC-27. GUARDS AND BARRICADES 48
GC-28. EXISTING TRAFFIC SIGNS AND FACILITIES 48
GC-29. MAINTAINING POSTAL SERVICE 48
GC-30. EMERGENCY WORK 49

GC-31. SUPERVISION OF WORK 49
GC-32. CORRECTION AND COMPLETION OF WORK 49
GC-33. SUBSTITUTES CLAUSE 50
GC-34. DETAILED BREAKDOWN OF CONTRACT PRICE 51
GC-35. CONTRACTOR'S RESPONSIBILITY FOR UTILITY PROPERTIES AND SERVICE 51
GC-36. STREET CLEANUP DURING CONSTRUCTION 52
GC-37. CLEANUP 52
GC-38. PROOF OF TAX PAYMENT 52
GC-39. HOLD HARMLESS REQUIREMENT 53
GC-40. JURISDICTION AND DISPUTE RESOLUTION 53
GC-41. PERMITS AND LICENSES 54
GC-42. ENVIRONMENTAL MATTERS 54
GC-43. NO THIRD-PARTY BENEFICIARIES 54
GC-44. COMPLIANCE WITH GRANT CONDITIONS 54
Section 3 ..... **111**
Amendments **111**
DIVISION 200 – EARTHWORK **111**
Section 201 – Clearing and Grubbing 111
Section 202 – Excavation & Embankment 113
DIVISION 300 – TRENCHING **113**
Section 305 – Pipe Bedding 113
Section 306 – Trench Backfill 114
SECTION 401 WATER PIPE AND FITTINGS **115**
PART 1 GENERAL 115
PART 2 MATERIALS 115
PART 3 WORKMANSHIP 117
SECTION 402 ..... **123**
HYDRAULIC VALVES 123
PART 1 GENERAL 123
PART 2 MATERIALS 123
PART 3 WORKMANSHIP 125
SECTION 403 ..... **127**
HYDRANTS 127
PART 2 MATERIALS 127
PART 3 WORKMANSHIP 127
SECTION 404 ..... **130**
WATER SERVICE LINE AND METERS 130
PART 2 MATERIALS 130
PART 3 WORKMANSHIP 132
SECTION 405 ..... **140**
NON-POTABLE WATER LINE SEPARATION 140
PART 3 WORKMANSHIP 140
ISPWC – DIVISION 400 ..... **142**
WATER – STANDARD DRAWINGS 142
REMOVE THE FOLLOWING ISPWC STANDARD DRAWINGS: 142
REPLACE THE FOLLOWING ISPWC STANDARD DRAWINGS: 142
ADD THE FOLLOWING CITY OF MOSCOW STANDARD DRAWINGS: 142
AMMEND THE FOLLOWING ISPWC STANDARD DRAWINGS: 142
AMMEND DIVISION 2000 – MISCELLANEOUS TO INCLUDE THE FOLLOWING SECTION **156**
SECTION 2060 156
LOCATING WIRE 156
PART 1 GENERAL 156
PART 2 MATERIALS 156
PART 3 WORKMANSHIP 157
ISPWC – 2000 ..... **161**
MISCELLANEOUS – STANDARD DRAWINGS 161
REMOVE THE FOLLOWING ISPWC STANDARD DRAWINGS: 161

REPLACE THE FOLLOWING ISPWC STANDARD DRAWINGS: 161
ADD THE FOLLOWING CITY OF MOSCOW STANDARD DRAWINGS: 161
SECTION 4 ..... **162**

SWPPP

APPENDICES:

APPENDIX 1: ALTA SCIENCE & ENGINEERING INC. SPECIAL PROVISIONS

APPENDIX 2: GEOPROFESSIONAL INNOVATION (GPI) GEOTECHNICAL REPORT

APPENDIX 3: MOSCOW STANDARD CONSTRUCTION DRAWINGS

SECTION 1

BIDDING INFORMATION AND DOCUMENTS

INVITATION TO BID
LILLY STREET RECONSTRUCTION 'A' ST. TO THIRD ST. - REBID

The City of Moscow, Idaho is accepting sealed bids to be submitted to the business office of The Community Development Engineering Division at 504 S. Washington Street, Moscow, Idaho 83843, and clearly marked **"Bid Enclosed - LILLY STREET RECONSTRUCTION 'A' ST. TO THIRD ST. - REBID"** until **2:00 p.m.,** prevailing local time, **Tuesday, January 10, 2023**, for the following project:

LILLY STREET RECONSTRUCTION 'A' ST. TO THIRD ST. - REBID

At 2:15 p.m., on the same day, all proposals will be publicly opened and read aloud at same location.

This project's base bid includes the reconstruction of Lilly Street, from State Highway 8 to

'A' Street. The reconstruction work includes full depth street pavement replacement, sidewalk replacement, waterline replacement, storm sewer replacement, and sanitary sewer replacement within the street. Pedestrian curb ramps at intersections will also be replaced as needed to be in compliance with ADA requirements. The base bid also includes the realignment of Hog Creek, including replacement of a box culvert under Lilly Street, block wingwalls, excavation of a new creek channel, block wall, precast elbow, twin 54" culverts and precast headwall.

This project's add alternate includes the reconstruction of First Street, from Lieuallen Street to Lilly Street. The reconstruction work includes full depth street pavement replacement, sidewalk replacement, installation of new waterline, and new stormwater facilities.

The Contract Documents may be examined at the following locations:

- City of Moscow, Haddock Building, 504 S. Washington Street, Moscow, ID 83843
- Welch Comer, 330 E. Lakeside Avenue, Suite 101, Coeur d'Alene, ID 83814

Complete digital PROJECT MANUAL, PROJECT PLANS, for the project, may be purchased at www.questcdn.com. You may download the digital plan documents for a **non-refundable $22.00** by inputting Quest project #8349066 on the website's Project Search page. Please contact QuestCDN.com at 952-233-1632 or info@questcdn.com for assistance in free membership registration, downloading, and working with digital project information.

IMPORTANT – All communication about this project, including addenda **will only be issued via QuestCDN, and only to those firms listed on the Plan Holder's List.**

A **Non-Mandatory Pre-Bid Conference** will be held at 3:30pm, prevailing local time, Wednesday, December 14th, 2022, at the City Hall Council Chambers, 206 East Third Street, Moscow, Idaho.

Any objections to the contents or terms of the Specifications shall be raised three (3) business days prior to bid opening or it shall be deemed to have been waived. The City reserves the right to reject any and all bids.

Please contact Adam Dorsey, PE at Welch Comer Engineers at 330 E. Lakeside Avenue, Suite 101, Coeur d'Alene, ID; Phone 208-664-9382; Email: adorsey@welchcomer.com if you have any questions.

BID PROPOSAL

TO: Mayor and City Council
City of Moscow, Idaho

Date: _____

This proposal is submitted as an offer by the undersigned to enter into contract with the City of Moscow, Idaho as represented by the City Council, hereinafter referred to as the 'CITY' for LILLY STREET RECONSTRUCTION 'A' ST. TO THIRD ST. - REBID, (hereinafter "Project"), specified herein and which construction documents are on file with the City Engineer, Haddock Building, 504 S. Washington Street, Moscow, Idaho, and which are a condition hereof with the same force and effect as though they were attached hereto. The offer is conditioned on the following declarations as to the facts, intention and understanding of the undersigned and the agreement of the CITY to the terms and prices herein submitted.

1. All Project specifications and drawings examined by the undersigned and their terms and conditions are hereby agreed to.

2. The undersigned certifies that he/she has received or made himself/herself aware of any and all existing site conditions that may affect the proposed work.

3. It is understood that the contract drawings may be supplemented by additional drawings and specifications in explanation and elaboration of the contract drawings, and it is agreed that such supplemental drawings, when not in conflict with those referred to in paragraph 1 above, will have the same force and effect as if attached hereto and that when received they will be considered a part of the contract.

4. The undersigned will furnish separate performance and payment bonds in the full amount of the contract price.

5. The cash, certified check, bid bond, or cashier's check accompanying this proposal shall be forfeited to the City of Moscow, Idaho to the extent of 5% of the amount bid if the undersigned shall fail or refuse to execute the contract, furnish performance and payment bonds, and insurance certificate as required by the specifications within the time limit therein after notification that the said proposal is accepted, all in accordance with the provisions of this proposal and the specifications.

6. The undersigned further agrees that CITY shall have the right to accept or reject any bid which rejection or acceptance is deemed to be in the best interest of CITY.

7. The undersigned agrees to order all necessary equipment and materials within a period of three (3) days after Notice to Proceed has been issued by the City Engineer.

8. The undersigned, as a bidder, acknowledges that Addenda Number _____ through _____ have been delivered to him/her and have been examined as part of the contract documents.

9. The undersigned agrees to complete all work embraced in the contract within the time limitations set forth in paragraph IB-13 of the Instruction to Bidders.

10. The undersigned holds Idaho Public Work's License Number _____.

11. The undersigned proposes to use the following sub-contractors in the performance of meeting the contract requirements. Information herein must comply with Idaho Code Section 67-2310 and IB-16:

Subcontractors	Trade Specialty	Idaho Public Works License No.	$ Amount
a.			
b.			
c.			
d.			
e.			

12. The undersigned proposes to furnish labor, materials, equipment, and services of all kinds required for LILLY STREET RECONSTRUCTION ‘A’ ST. TO THIRD ST. - REBID as described in the specifications, including all appurtenant work, all as required by the specifications and this proposal for the prices in accordance with the completed schedule contract prices as follows:

BASE BID

Bid Item No.	Description	Pay Unit	Est. Qty.	Unit Price	Total Value of Item ($)
201.4.1.B.1	CLEARING AND GRUBBING	LS	1	$	$
201.4.1.C.1	REMOVAL OF OBSTRUCTIONS	LS	1	$	$
201.4.1.D.1	REMOVAL OF BITUMINOUS SURF	SY	3390	$	$
201.4.1.D.2	REMOVAL OF CONC SIDEWALK	SY	860	$	$
201.4.1.D.3	REMOVAL OF DRIVEWAY	SY	94	$	$
201.4.1.E.1	REMOVAL OF CURB	LF	1530	$	$
201.4.1.F.1	REMOVAL OF HYDRANT	EA	1	$	$
201.4.1.F.2	REMOVAL OF EXISTING SIGNS	EA	3	$	$
201.4.1.F.3	REMOVAL OF CATCH BASIN	EA	6	$	$
201.4.1.F.4	REMOVAL OF WATER VAULT	EA	1	$	$
201.4.1.F.5	REMOVAL OF BOX CULVERT	EA	1	$	$
201.4.1.F.6	REMOVAL AND REINSTALLATION OF BOLLARDS	EA	2		
202.4.1.A.1	EXCAVATION	CY	600	$	$
401.4.1.A.1	WATER MAIN PIPE, 8" C900 DR18	LF	525	$	$
402.4.1.A.1	MANUAL AIR RELEASE STATION	EA	2	$	$
403.4.1.A.1	HYDRANT	EA	2	$	$
404.4.1.A.1	WATER SERVICE CONNECTION, 1"	EA	20	$	$
405.4.1.A.1	POTABLE WATERLINE CASING - 2", TYPE SCHEDULE 80	LF	170	$	$
405.4.1.A.2	POTABLE WATERLINE CASING - 8", TYPE C900 DR25	LF	120	$	$
405.4.1.A.3	POTABLE WATERLINE CASING - 16", TYPE C900 DR25	LF	60	$	$
405.4.1.A.4	POTABLE WATERLINE CASING - 20", TYPE STEEL	LF	20	$	$
501.4.1.B.1	GRAVITY SEWER PIPE SIZE 8" TYPE ASTM D3034	LF	790	$	$
502.4.1.A.1	SANITARY SEWER MANHOLE - 48" STANDARD	EA	5	$	$
502.4.1.A.2	SANITARY SEWER MANHOLE - DOGHOUSE	EA	2	$	$
504.4.1.B.1	SEWER SERVICE LINE - 4"	EA	14	$	$
507.4.1.H.1	REMOVE MANHOLE	EA	6	$	$
601.4.1.A.5	12" STORM PIPE PVC ASTM D3034	LF	148	$	$
601.4.1.A.15	54" CULVERT CORRUGATED ALUMINIZED STEEL	LF	220	$	$
601.4.1.B.5	12" C900 STORM PIPE	LF	80	$	$
602.4.1.F.1	CATCH BASIN	EA	8	$	$
704.4.1.B.1	BOX CULVERT	LF	66	$	$
704.4.1.D.1	PRECAST CONCRETE STORM STRUCTURE	EA	1	$	$
704.4.1.D.2	PRECAST CONCRETE HEADWALL	EA	1	$	$
705.4.1.A.1	PORTLAND CEMENT CONCRETE PAVEMENT, CLASS 4000A	SY	64	$	$
706.4.1.A.3	VERTICAL CURB - TYPE A	LF	283	$	$
706.4.1.A.5	CURB & GUTTER - TYPE B	LF	1668	$	$

Bid Item No.	Description	Pay Unit	Est. Qty.	Unit Price	Total Value of Item ($)
706.4.1.A.11	ROLLED CURB - TYPE C	LF	198	$	$
706.4.1.E.1	CONCRETE SIDEWALK, 5"	SY	1100	$	$
706.4.1.E.2	CONCRETE SIDEWALK, 6"	SY	110	$	$
706.4.1.F.1	CONCRETE DRIVEWAY APPROACH	SY	270	$	$
706.4.1.H.1	PEDESTRIAN RAMP w/ DETECTABLE WARNING DOMES	SY	84	$	$
801.4.1.B.1	1" MINUS UNCRUSHED AGGREGATE	TON	32	$	$
802.4.1.B.1	CRUSHED AGGREGATE FOR BASE TYPE I	TON	1730	$	$
802.4.1.B.2	CRUSHED AGGREGATE FOR BASE, 1-1/4"(-)	TON	670	$	$
810.4.1.A.5	SUPERPAVE HMA, CLASS SP-3, 1/2" AGG	TON	660	$	$
901.4.1.C.1	PRESSURE IRRIGATION SYSTEM MODIFICATIONS	CA	15000	$	$
1001.4.2.B.1	STABILIZED CONSTRUCTION ENTRANCE	EA	1	$	$
1005.4.1.I.1	FIBER WATTLE	LF	100	$	$
1006.4.1.C.1	INLET PROTECTION	EA	28	$	$
1007.4.1.A.1	TOPSOIL	CY	40	$	$
1007.4.1.B.1	SEEDING	SF	6425	$	$
1007.4.1.C.1	SODDING	SY	100	$	$
1102.4.1.I.1	LIGHTED BOLLARDS	EA	6	$	$
1103.4.1.A.1	CONSTRUCTION TRAFFIC CONTROL	LS	1	$	$
1105.4.1.A.2	PERMANENT SIGNING	LS	1	$	$
2010.4.1.A.1	MOBILIZATION	LS	3210	$	$
2050.4.1.C.1	SUBGRADE SEPARATION GEOTEXTILE	SY	1	$	$
SP 6.4.1.A.1	SWPPP MANAGEMENT	LS	1	$	$
SP 7.4.1.A.1	ORNAMENTAL FENCE	LF	364	$	$
ALTA SP-1	CHANNEL	LF	290	$	$
ALTA SP-2	CONCRETE BLOCK RETAINING WALL	SFF	2356	$	$
ALTA SP-3	REVEGETATION PLANTING	SF	4400	$	$
ALTA SP-4	REVEGETATION SEEDING AND MULCHING	SF	4390	$	$
ALTA SP-5	WATER MANAGEMENT	LS	1	$	$
ALTA SP-6	PROVIDE WATER	DAYS	60	$	$
				Total Base Bid	**$**

Total (written in words): _____

_____

ADD ALTERNATE 1: FIRST STREET

Bid Item No.	Description	Pay Unit	Est. Qty.	Unit Price	Total Value of Item ($)
201.4.1.D.2	REMOVAL OF CONC SIDEWALK	SY	106	$	$
202.4.1.A.1	EXCAVATION	CY	470	$	$
401.4.1.A.1	WATER MAIN PIPE, 8" C900 DR18	LF	285	$	$
403.4.1.A.1	HYDRANT	EA	1	$	$
404.4.1.A.1	WATER SERVICE CONNECTION, 1"	EA	3	$	$
405.4.1.A.3	POTABLE WATERLINE CASING - 16", TYPE C900 DR25	LF	20	$	$
706.4.1.A.5	CURB & GUTTER - TYPE B	LF	269	$	$
706.4.1.E.1	CONCRETE SIDEWALK, 5"	SY	150	$	$
802.4.1.B.1	CRUSHED AGGREGATE FOR BASE TYPE I	TON	242	$	$
802.4.1.B.2	CRUSHED AGGREGATE FOR BASE, 1-1/4"(-)	TON	157	$	$
810.4.1.A.5	SUPERPAVE HMA, CLASS SP-3, 1/2" AGG	TON	157	$	$
1006.4.1.C.1	INLET PROTECTION	EA	1	$	$
2010.4.1.A.1	MOBILIZATION	LS	1	$	$
2050.4.1.C.1	SUBGRADE SEPARATION GEOTEXTILE	SY	756	$	$
SP 1.4.1.A.1	CONSTRUCTION SURVEY	LS	1	$	$
SP 4.4.1.A.1	RETAINING WALL - SMALL	SF	46		
SP 4.4.1.A.2	REMOVE AND RESET RETAINING WALL	SF	51		
				Total Add Alternate 1	**$**

Total (written in words): _____

_____

_____
Firm Name of Bidder

_____
Signature of Bidder

_____
Official Title

_____
Bidders Mailing Address

_____
Public Works License No.

_____
State of Incorporation if Incorporated

SEAL (if incorporated)

Dated at _____

This ____ day of _____, 20___

CONSTRUCTION AGREEMENT

(DRAFT - DO NOT SUBMIT WITH BID)

THIS CONSTRUCTION AGREEMENT (hereinafter “Agreement”), dated this ____ day of _____, 20___, by and between the City of Moscow, Idaho, a municipal corporation of the State of Idaho, 206 East Third Street, Moscow, Idaho, 83843 (hereinafter, "CITY") and _____, (hereinafter, "CONTRACTOR"):

W I T N E S S E T H:

WHEREAS, pursuant to the invitation of CITY, extended through an Invitation to Bid, CONTRACTOR did, in accordance therewith, file with CITY a proposal containing an offer which was invited by said notice; and

WHEREAS, CITY has determined that said offer was the lowest responsive and best submitted:

NOW THEREFORE, the parties to this Agreement, in consideration of the mutual covenants and stipulations set out, agree as follows:

ARTICLE 1.
CONTRACT DOCUMENTS

The Contract Documents which comprise the entire agreement between the CITY and the CONTRACTOR concerning the work to be performed are this Contract, pages one (1) through _____, (_) and the following:

1. Invitation to Bid;
2. Project Specifications titled: LILLY STREET RECONSTRUCTION ‘A’ ST. TO THIRD ST. - REBID;
3. Bid/Proposal of the CONTRACTOR, dated _____, 20___, to be physically attached to this Agreement;
4. The Engineering Plans;
5. Performance and Payment Bonds and Insurance Certificates, to be physically attached to this Agreement;
6. Change Orders, which may be delivered or issued after the effective date of this Agreement;
7. Addenda issued prior to opening of bids, to be physically attached to this Agreement.

There are no Contract Documents other than those listed in Article 1. This Agreement may only be amended by change order as provided in the General Conditions.

ARTICLE 2.
WORK

The CONTRACTOR shall complete the entire work as specified, indicated and required under the Contract Documents.

ARTICLE 3.
AGREEMENT TIME/SUBSTANTIAL COMPLETION

The work to be performed pursuant to this Agreement shall start no earlier than May 15, 2023 and shall be substantially complete by August 25, 2023, unless adjustment of the Agreement time is made in accordance with the provisions of the Contract Documents.

ARTICLE 4.
AGREEMENT SUM

CITY shall pay CONTRACTOR for completion of the Work in accordance with the Contract Documents in current funds the amount of _____ _____ Dollars (_____). In no event shall Contract amount exceed Contractor's bid amount of _____ Dollars (_____) unless otherwise authorized by the City. Any such increase in work shall be compensated in accordance with unit pricing terms specified in bid documents. Said Agreement Sum shall be paid in accordance with the Contract Documents.

ARTICLE 5.
INDEPENDENT CONTRACTOR

The parties warrant by their signature that no employer-employee relationship is established between CONTRACTOR and CITY by the terms of this Agreement. It is understood by the parties hereto that CONTRACTOR is an independent contractor and as such neither it nor its employees, agents, representatives, or subcontractors, if any, are employees of CITY for purposes of tax, retirement system, or social security (FICA) withholding.

ARTICLE 6.
SCOPE OF SERVICES

CONTRACTOR shall perform all services required by the Contract Documents. All work shall be completed in accordance with the specifications and plans established for this Project.

ARTICLE 7.
HOLD HARMLESS/INDEMNIFICATION

In addition to other rights granted CITY by the Contract Documents, CONTRACTOR shall indemnify and save harmless the Engineer and the CITY, its officers and employees, from all suits, actions, or claims of any character brought because of any injuries or damages received or sustained by any person, persons, or property on account of the operations of CONTRACTOR or his/her subcontractors; or on account of or in consequence of any neglect in safeguarding the work; or through use of unacceptable materials in constructing the work; or because of any act or omission, neglect, or misconduct of CONTRACTOR or his/her subcontractors; or because of any claims or amounts recovered from any infringements of patent, trademark or copyright; or from any claims or amounts arising or recovered under the Workmen's Compensation Act or any other law, ordinance, order or decree.

ARTICLE 8.
CONFLICT OF INTEREST

CONTRACTOR covenants that it presently has no interest and will not acquire any interest, direct or indirect, in the project which would conflict in any manner or degree with the performance of its services hereunder. CONTRACTOR further covenants that, in performing this Agreement, it will employ no person who has any such interest. Should any conflict of interest arise during the performance of this Agreement, CONTRACTOR shall immediately disclose such conflict to the Project Engineer/Engineer and the CITY.

ARTICLE 9.
ENTIRE AGREEMENT, MODIFICATION AND ASSIGNABILITY

This Agreement and the exhibits hereto contain the entire agreement between the parties, and no statements, promises, or inducements made by either party, or agents of either party are valid or binding unless contained herein. This Agreement may not be enlarged, modified, or altered except upon written agreement signed by the parties hereto. CONTRACTOR may not subcontract or assign its rights (including the right to compensation) or duties arising hereunder other than as contemplated by the Contract Documents, without the prior written consent and express authorization of CITY.

ARTICLE 10.
ADHERENCE TO LAW REQUIRED

All applicable local, state and federal statutes and regulations are hereby made a part of this Agreement and shall be adhered to at all times. Violation of any of these statutes or regulations by CONTRACTOR shall be deemed material and shall subject CONTRACTOR to termination of this Agreement for cause. No pleas of misunderstanding or ignorance on the part of CONTRACTOR will in any way serve to modify the provisions of this requirement. CONTRACTOR and his/her surety shall indemnify and save harmless CITY and its employees, agents and representatives against any claim or liability arising from or based on the violation of

any such laws, codes, ordinances, or regulations, whether by himself/herself, his/her employees, or his/her subcontractors.

ARTICLE 11.
LEGAL FEES

In the event either party incurs legal expenses to enforce the terms and conditions of this Agreement, the prevailing party is entitled to recover reasonable attorney's fees and other costs and expenses, whether the same are incurred with or without suit.

ARTICLE 12.
JURISDICTION AND VENUE

It is agreed that this AGREEMENT shall be construed under and governed by the laws of the State of Idaho. In the event of litigation concerning it, it is agreed that proper venue shall be the District Court of the Second Judicial District of the State of Idaho, in and for the County of Latah.

ARTICLE 13.
SPECIAL WARRANTY

CONTRACTOR warrants that nothing of monetary value has been given, promised or implied as remuneration or inducement to enter into this Agreement. CONTRACTOR further declares that no improper personal, political, or social activities have been used or attempted in an effort to influence the outcome of the competition, discussion, or negotiation leading to the award of this Agreement. Any such activity by CONTRACTOR shall make this Agreement null and void.

ARTICLE 14
COMMUNICATIONS

Such communications as are required by this Agreement shall be satisfied by mailing or by personal delivery to the parties at the following address:

CONTRACTOR:

CITY:
City of Moscow
206 East Third Street
P O Box 9203
Moscow, Idaho, 83843

IN WITNESS WHEREOF, said CONTRACTOR and CITY have caused this Agreement to be executed on the day and year first above written.

Contractor:

City:

_____

by:

_____

Art Bettge, Mayor

ATTEST:

_____

City Clerk/Deputy City Clerk

Approved As To Form:

_____

Mia Bautista, City Attorney

ACKNOWLEDGMENT

On this _____ day of _____, 20___, before me, a Notary Public of the State of Idaho, personally appeared _____, in his/her official capacity as _____, known to me to be the person described in the above document and acknowledged to me he/she executed the same.

SEAL

Notary Public.

My Commission expires _____

INSTRUCTION TO BIDDERS

IB-1. INTENT OF PLANS AND SPECIFICATIONS

A. It is the intention of these specifications to provide for careful, thorough and workmanlike construction procedure in the installation of material and equipment and in the manufacture or delivery of such materials and equipment. The bidder to whom the contract is awarded shall furnish all the material, equipment and labor necessary to complete said contract in accordance with all of its terms and conditions. All contracts shall be awarded subject to those instructions to bidders.

B. The plans and specifications shall be considered and used together; anything appearing as a requirement of either shall be accepted as applicable to both even though not stated therein or shown. All specifications and notes appearing on the plans shall have the same force and effect as though they were repeated herein.

IB-2. PLANS, SPECIFICATIONS, AND ADDITIONAL INFORMATION

A. Plans and specifications are on file in the office of the City Engineer. Copies of same may be obtained electronically from www.questcdn.com for a non-refundable $22.00. Additional information relative to same may be obtained from the office of the City Engineer.

IB-3. EXAMINATION OF PLANS, SPECIFICATIONS, AND SITE

A. Bidders shall satisfy themselves by personal examination of the plans, specifications, and site of the proposed improvement, and by any other examinations and investigation which they may desire to make, as to the accuracy of the estimate of quantities, the nature of the soil, conditions of the project site, and difficulties to be encountered.

IB-4. PREPARATION AND DELIVERY OF PROPOSAL

A. Bids shall be prepared and submitted upon the "Proposal" form supplied by the City Engineer. Each and every blank provided for in the "Proposal" shall be filled in with ink or typing. Proposals, which are incomplete or submitted on an unauthorized form, may be rejected as informal.

B. After the date and hour set for the opening of the bids, no bidder may withdraw his/her proposal unless award of contract is delayed for a period exceeding the time limits described in IB-8, AWARD OF CONTRACT.

C. If discrepancies exist between the Unit Prices and the Total Price or Bid Total amount, the CITY will use the Unit Prices and calculate a corrected Bid Total.

D. The CITY reserves the right to reject any or all bids, any or all schedules or to accept the bid or schedule deemed to be in the best interest of the CITY.

IB-5. PROPOSAL GUARANTY

A. Each proposal must be accompanied by cash, a certified check, bid bond, or cashier's check in an amount not less than five percent (5%) of the total amount bid. This guaranty or "Good faith token" will be held until the successful bidder has, within ten (10) days from the date of notification of award of contract, executed the contract and furnished approved separate performance and payment bonds, each in an amount equal to one hundred percent (100%) of the amount of the contract. There shall also be submitted with the surety bonds, evidence of public liability insurance coverage in amounts not less than those specified in the general specifications included herein.

IB-6. RETURN OF PROPOSAL GUARANTY

A. Immediately after the bid prices have been compared, the Clerk will return the guaranties accompanying such proposals as in the CITY's judgment will not be considered in awarding the contract. All other proposal guaranties will be held until the contract and other legal requirements the successful bidder must execute, furnish and/or comply with, have been completed, after which they will be returned to the respective bidders whose proposals they accompany.

IB-7. QUALIFICATIONS OF BIDDER

A. The CITY desires that this Project shall be built by a contractor who is competent and adequately financed. The CITY may request the Bidder to submit a written statement to show experience in construction work of their character as an indication of qualification and business standing. If required, the Bidder may make his/her statement in such form as may seem appropriate; said statement shall be notarized.

B. This public works project is not financed in whole or in part by federal-aid funds. Bid proposals will be accepted from those contractors only (prime contractors, subcontractors and/or specialty contractors) who, prior to the bid opening, hold current licenses as public works contractors in the State of Idaho.

C. The prime contractor shall submit with his/her proposal a list of the subcontractors and their license numbers.

D. The successful bidder, in addition to listing the names and addresses of subcontractors in his/her bid, shall, within seven (7) days after opening of the bids, notify the Engineer in writing of the names of all major equipment and material suppliers proposed for the principal parts of the work, and for such others as the Engineer may direct, and shall not employ any subcontractors, (or purchase any equipment), to which the Engineer or CITY may within a reasonable time object to as incompetent or undesirable.

IB-8. AWARD OF CONTRACT

A. The contract will not be awarded until the CITY is satisfied the successful bidder is reasonably familiar with the class of work upon which he/she has submitted a proposal and has the necessary capital and tools to satisfactorily perform the same. The CITY may request, and the bidder must provide the CITY with a current balance sheet and a list of tools owned by the bidder.

B. Within thirty (30) days after the opening of the proposals the CITY will accept one of the proposals or reject all bids. The award will be made upon the basis of the proposal that, in the CITY's judgment, will serve the best interest of the CITY.

C. The contract will not be awarded until the bidder has obtained an appropriate Idaho Public Works License from the Idaho Public Works Contractors State License Board. Subcontractors are also subject to this requirement.

IB-9. FAILURE TO EXECUTE CONTRACT

A. In the event the successful bidder fails to furnish approved performance and payment bonds, execute the contract, and comply with all other pertinent legal requirements within ten (10) days after notification by the Engineer of the notice of intent to award the contract, the certified check, bank draft, money order of bid bond will be forfeited to the CITY as liquidated damages. The amount of any such damages will be five percent (5%) only of the total bid submitted. Any excess amount that may have been included

in the "good faith token" will be returned to the bidder. The next best proposal will then be considered the successful bid and, at the discretion of the CITY, be considered for award of the contract.

IB-10. NONDISCRIMINATION IN EMPLOYMENT

A. The Contractor will not discriminate against any employee or applicant for employment because of race, color, religion, sex, national origin, age, or disability. The Contractor will take action, if necessary, to ensure that applicants are employed, and treated during such employment, without regard to their race, color, religion, sex, national origin, age, or disability. Such action shall include, but not be limited to, the following: employment, upgrading, demotion, or transfer; rates of pay or other forms of compensation; and selection for training, including apprenticeship.

B. The Contractor shall comply with City Ordinance No. 2013-06 Gender Anti-Discrimination in Housing, Employment & Public Accommodations.

IB-11. WAGE RATES

A. Contractors are not required to pay prevailing wages on this Project. Prevailing wages no longer are required on Public Works projects in Idaho.

IB-12. CONTRACTOR FOR PUBLIC WORKS TO PAY OR SECURE TAXES AGREEMENT

A. The contractors, in consideration of securing the business of erecting or construction public works in this State, recognizing that the business in which he/she is engaged is of a transitory character, and that in the pursuit thereof, his/her property used therein may be without the State when taxes, excises, or license fees to which he/she is liable become payable, agrees:

1. To pay promptly when due all taxes, (other than real property), excises and license fees due to the State, its subdivisions, and municipal quasi-municipal corporations therein, accrued or accruing during the term of this contract, whether or not the same shall be payable at the end of such term.

2. That if the said taxes, excises, and license fees are not payable at the end of said term, but liability, for the payment thereof exists, even though the same constitute liens upon his/her property, to secure the same to the satisfaction of the respective officers charged with the collection thereof; and

3. That, in the event of his/her default in the payment or securing of such taxes, excises, and license fees, to consent that the department, officer, board, or taxing unit entering into this contract may withhold from any payment due him/her hereunder the estimated amount of such accrued and accruing taxes, excises, and license fees for the benefit of all taxing units to which said contractor is liable.

IB-13. PERFORMANCE PERIOD

A. This work shall start no earlier than May 15, 2023 and shall be substantially completed by August 25, 2023. The work shall be completed within one hundred (100) calendar days from the commencement of work. If Add Alternate bid is accepted, the substantially complete date will be extended to September 15, 2023, and an additional twenty (20) calendar days will be added.

IB-14. CONSIDERATION OF MULTIPLE DIVISIONS OF WORK

A. The bidder shall submit a proposal for all divisions, if applicable. Considerations of proposals for each division of work shall be made separately (i.e. one bidder may be awarded one division; another bidder may be awarded one of the other divisions).

IB-15. ALTERNATES

A. If an alternative bid schedule is included, the bidder must submit a bid for each item in the alternate bid schedule. Low bid will be based upon the combined total price of the alternate(s) that the owner elects to use plus the base bid. If the owner elects to use an alternate(s), the amount of the contract will be the amount of the base bid modified in accordance with the amount of the alternate(s). An alternate may be additive to the scope of work described by the base bid items or may be substituted for the base bid item. Unit prices for alternate items will receive the same consideration for award as unit prices for base bid items.

IB-16. SUBCONTRACTORS TO BE LISTED ON BID

A. All bidders shall comply with Idaho Code Section 67-2310. **Failure to comply with Idaho Code Section 67-2310 shall render such bid unresponsive and void**. Information provided pursuant to this section must be current and correct as of the date of the submission of the bid. Do not use the term "mechanical" when identifying any work to be performed on this project.

B. The name, address, Idaho Public Works License Number and bid amount for each subcontractor to be utilized on the project must appear with the bid. Every subcontractor intending to perform plumbing work, and/or heating and air conditioning work, and/or electrical work must include its name, address, and Idaho Public Works License Number which allows it to perform such work and bid amount for each of the following areas: plumbing work, heating and air conditioning work, electrical work. If a subcontractor intends to perform work in more than one of these specialties, such a subcontractor must list its name, address, Idaho Public Works License Number, and bid amount more than once (i.e., for each of the following subject areas: plumbing work, heating and air conditioning work, electrical work). It is helpful, but not mandatory, that each subcontractor includes its specialty construction category numbers, if any, with its submission of its Idaho Public Works License Number.

C. Every contractor intending to perform its own plumbing work, and/or heating and air conditioning work, and/or electrical work, must include its name, address, and Idaho Public Works License Number which allow it to perform such work for <u>each</u> of the following areas: plumbing work, heating and air conditioning work, electrical work. A contractor does <u>not</u> need to list the amount of the bid for plumbing work, heating and air conditioning work, or electrical work which it intends to perform.

D. Subcontractors, Equipment and Material: The successful bidder, in addition to listing the names and addresses of subcontractors in his/her bid, shall, within seven (7) days after opening of the bids, notify the Engineer in writing of the names of all major equipment and material suppliers proposed for the principal parts of the work, and for such others as the Engineer may direct, and shall not employ any subcontractors, (or purchase any equipment), to which the Engineer or CITY may within a reasonable time object to as incompetent or undesirable.

SECTION 2

GENERAL CONDITIONS

GENERAL CONDITIONS

GC-1. COMPLIANCE

A. The Contractor shall observe and comply with all Federal, State, and Local laws, codes, ordinances, and regulations, including all licensing and permit requirements which, in any manner, apply to the work being performed under this contract. No pleas of misunderstanding or ignorance on the part of the Contractor will in any way serve to modify the provisions of this requirement. The Contractor and his/her surety shall indemnify and save harmless CITY and its employees, agents and representatives against any claim or liability arising from or based on the violation of any such laws, codes, ordinances, or regulations, whether by himself/herself, his/her employees, or his/her subcontractors.

B. All work shall be completed in accordance with the specifications and plans established for this project.

GC-2. DEFINITIONS

Architect	The Project Architect, if such is designated by the Contract Documents.
Attorney	The City Attorney of Moscow, Idaho.
City	The City of Moscow, Latah County, Idaho ("CITY"), a municipal corporation existing under and by virtue of the laws of the State of Idaho. Action herein designated as taken by the CITY is to be considered the acts of the Council acting through the Mayor and Clerk.
City Engineer	The City Engineer of Moscow, Idaho, resident engineers, and inspectors acting under his/her orders; their authority being limited to the particular duties to which they are assigned.
City Parks & Facilities Manager	The City Parks & Facilities Manager of Moscow, Idaho, and/or inspectors acting under his/her orders; their authority being limited to the particular duties to which they are assigned.

Clerk	The duly appointed City Clerk of the City of Moscow, Idaho.
Contract Documents	These generally consist of the plans, specifications, agreement, performance bond, payment bond and proof of various types of insurance, including all modifications thereof incorporated in the documents before their execution. These are identified in the Contract.
Contractor	The person, persons, firm, partnership, corporation or other entity contracting to do the work under these specifications. The term also includes the Contractor's agents or employees.
Council	The duly elected Council of the City of Moscow, Idaho.
Engineer	The Project Engineer, if such is designated by the Contract Documents.
Subcontractor	The person, persons, firm, corporation or other entity performing work under contract with the "Contractor" but subject, in such performance, to all the requirements of the 'Contract Documents' insofar as they are pertinent.
Bid/Proposal	The written document which is required to be signed by the bidder and which contains the formal statement of price or prices to be paid by the City for the performance required.

GC-3. PLANS AND SPECIFICATIONS AND ADDITIONAL DRAWINGS

A. The plans for this improvement and the specifications accompanying them shall be considered as a whole, and anything shown or called for in one (1) and omitted in the other is as binding as if called for or shown by both. Figure dimensions shall be in all cases used in preference to scale dimensions. The intention of the documents is to include all labor and materials, equipment and transportation necessary for the proper execution of the work. Materials or work described in words so applied having a well-known technical or trade meaning shall be held to refer to such recognized standards.

B. The Engineer shall furnish to the Contractor the necessary plans and specifications required for the execution of the work at no additional cost. The

Engineer shall furnish with reasonable promptness, additional instructions, by means of drawings or otherwise, necessary for the proper execution of the work.

C. The Contractor shall submit with such promptness as to cause no delay in his/her own work or in that of any other Contractor, copies of all shop drawings and schedules required for the work of various trades as required by the Engineer, and the Engineer shall pass upon them with reasonable promptness, making desired corrections relating to effects on design. The Contractor shall make any corrections required by the Engineer, file with him/her such corrected copies as the Engineer shall direct and furnish such other copies as may be needed. The Engineer's approval of such drawings or schedules shall not relieve the Contractor from responsibility for deviation from drawings or specifications, unless he/she has in writing called the Engineer's attention to such deviation at the time of submission, nor shall it relieve him/her from responsibility for errors of any sort in shop drawings or schedules.

D. The Contractor shall keep one (1) copy of all drawings and specifications on the work, in good order, available to the Engineer, CITY, and its representatives.

GC-4. ALTERATION OR MODIFICATION OF CONTRACT DOCUMENTS

A. No alteration or modification of the terms and conditions of the Contract Documents, except by written change order as provided herein, will be binding unless outlined in detail in a separate written addendum, and then only when properly signed and attested by the Contractor, CITY, and the City Engineer.

GC-5. INVESTIGATION BY BIDDERS

A. The instructions to bidders cover the general scope of this investigation under the article entitled "Examination of the Plans, Specifications and Site". Bidders are specifically instructed to faithfully examine and investigate the entire bid prices submitted on their proposals. No bidder may, without the consent of CITY, withdraw his/her proposal or claim damages or extra compensation by reason of any error or omission made by said bidder in preparing his/her proposal.

GC-6. NON-DISCRIMINATION

A. The Contractor shall not discriminate against any employee or applicant for employment on the basis of race, color, religion, sex, national origin, age, or disability.

B. The Contractor shall comply with City Ordinance No. 2013-06 Gender Anti-Discrimination in Housing, Employment & Public Accommodations.

GC-7. INTERPRETATION OF THE SPECIFICATIONS

A. In the event the specifications and plans are deficient or not clearly expressed, the parties submitted proposals hereunder must apply to the City Engineer for the required information or explanation before the bids are submitted.

B. The request for such explanation or interpretation shall be made in writing and the person submitting the request will be responsible for its prompt delivery. Such interpretation or explanation will be given by the City Engineer in writing and a copy will be filed in the office of the City Clerk. CITY will not be responsible for any other explanation or interpretation of the plans and specifications. After submission of bids, no bidder shall claim any misunderstanding in or to the nature of the amount of work to be performed or attempt to hold CITY or any person responsible for any error or omission that may have been made by the bidder.

GC-8. CONTRACTS

A. Contract Form

1. A copy of the construction agreement form is included in these documents.

B. Execution of Agreement

1. Within ten (10) days after receiving properly prepared Contract Documents from CITY, the successful bidder shall sign the agreement. Work shall be started upon written notice to proceed from the City Engineer.

C. Subcontracts

1. The Contractor agrees that he/she is as fully responsible to CITY for the acts and omissions of his/her subcontractors and of persons either directly or indirectly employed by them, as he/she is for the acts and omissions of persons directly employed by him/her, and that the Contractor shall hold CITY harmless for any activities of such subcontractors and shall indemnify and defend CITY from damages and claims of whatever nature relating or resulting to the activities of such subcontractors.

2. Relations of Contractor and Subcontractor: The Contractor agrees to bind every subcontractor to the terms of the construction contract, the information to bidders, the general conditions, the plans, and the specifications as far as applicable to his/her work, including the following

provisions of this article. Nothing in this section shall create any obligation on the part of CITY to pay to or to see to the payment of any sums to any subcontractor.

a. The Contractor shall bind every subcontractor to the following:

(1) To be bound to the Contractor by the terms of the Contract Documents, and to assume toward him/her all the obligations and responsibilities that he/she, by those documents, assumes toward the CITY. Nothing contained in the Contract Documents shall create any contractual relation between any subcontractor and CITY.

(2) To submit to the Contractor applications for payment in such reasonable time as to enable the Contractor to apply for payment. The Engineer shall, on request, furnish to any subcontractor, wherever practical, evidence of the amounts certified on his/her account.

(3) To make all claims for extras, for extension of time and for damages for delays or otherwise, to the Contractor in the manner provided in the general conditions for like claims by the Contractor upon the CITY, except that the time for making claims for extra cost is one (1) week from the date such claim arises.

b. The Contractor agrees:

(1) To be bound to the subcontractor by all the obligations that CITY assumes to the Contractor under the Contract Documents.

(2) To pay the subcontractor for conforming work, upon the payment of certificates, if issued under the terms of payments for the work, the amount allowed to the Contractor on account of the subcontractor's work to the extent of the subcontractor's interest therein.

(3) To pay the subcontractor for conforming work, upon the payment of certificates, if issued otherwise than as in (2) so that at all times his/her total payments shall be as large in proportion to the value of the work done by him/her as the total amount certified to the Contractor is to the value of the work done by him/her.

(4) To pay the subcontractor for conforming work to such extent as may be provided by the Contract Documents or the subcontract if either of these provides for earlier or larger payments than the above.

(5) To pay the subcontractor for conforming work on demand on his/her work or materials as far as executed and fixed in place, less retained percentage, at the time the certificate should be issued, even though the Engineer fails to issue it for any cause not the fault of the subcontractor.

(6) To make no demands for liquidated damages or penalty for delay in any sum in excess of such amount as may be specifically named in the subcontract.

(7) That no claim for services rendered or material furnished by the Contractor to the subcontractor shall be valid unless written notice thereof is given by the Contractor to the subcontractor during the first ten (10) days of the calendar month following that in which the claim originated.

(8) To give the subcontractor an opportunity to be present and to submit evidence in any hearing involving his/her rights.

(9) To pay each subcontractor for satisfactory performance of its contract no later than twenty (20) calendar days from receipt of each payment the Contractor receives from CITY. The Contractor shall return retainage to each Subcontractor within twenty (20) calendar days after the Subcontractor's work is satisfactorily completed.

(10) To certify with each estimate payment to subcontractors has been made within the prescribed time frames. The certification will be made on forms provided by CITY, and returned within twenty (20) calendar days of receiving the estimate payment.

D. CITY's Right to Terminate Agreement - If the Contractor:

1. Fails to begin work within a reasonable time after the effective date of "Notice to Proceed," or

2. Fails to supply sufficient skilled workmen or suitable materials or equipment to complete the work within the time limits specified; or

3. Performs the work unsuitably or neglects or refuses to remove materials or to re-perform such work which is not in accordance with the plans and specifications; or

4. Discontinues the prosecution of the work for more than ten (10) days; or

5. Fails to resume work which has been discontinued within a reasonable time after notice to do so; or

6. Fails to make prompt payments to subcontractors or for labor, materials, or equipment; or

7. Disregards laws, ordinances, or the instruction of the Engineer; or

8. Becomes insolvent or is declared bankrupt, or commits any act of bankruptcy or insolvency; or

9. Makes an assignment for the benefit of creditors; or

10. Is guilty of a substantial violation of any provisions of the Agreement; in any such event(s), CITY, upon recommendation of the Engineer that

sufficient cause exists to justify such action may, without prejudice to any other right or remedy, give notice to the Contractor and his/her surety of such delay, neglect, or default. If the Contractor or his/her surety, within a period of ten (10) days after such notice, does not proceed in accordance therewith, then CITY shall have full power and authority, without violating the Agreement, to take the prosecution of the work from the Contractor. CITY may appropriate or use any or all materials and equipment on the grounds as may be suitable and acceptable and may enter into an agreement for the completion of said contract according to the terms and provisions thereof or use such other methods as may be required for the completion of the contract in an acceptable manner.

11. Costs and charges incurred by CITY, together with the cost of completing the work under the agreement, will be deducted from any moneys due or which may become due the Contractor. If such expense exceeds the sum which would have been payable under the Agreement, then the Contractor and its surety shall be liable and shall pay to CITY the amount of such excess.

E. Contractor's Right to Stop Work or Terminate Agreement:

1. If the work should be stopped pursuant to lawful order of a court of competent jurisdiction, or pursuant to lawful order of other public authority having jurisdiction, for a period of three (3) months, through no act or fault of the Contractor or of anyone employed by him/her, or if the Engineer should fail to issue any certificate for payment within twenty-two (22) days after it is due, or if CITY should fail to pay to the Contractor within twenty-two (22) days of its maturity and presentation, any sum certified by the Engineer or awarded by the court, then the Contractor may, upon twenty-two (22) days' notice to CITY and Engineer, stop work or terminate this Agreement or recover from CITY payment for all work executed and any loss sustained upon any plant or materials and reasonable profit and damages.

F. Assignment:

1. The Contractor shall not assign this contract or sublet or subcontract any portion of it without the prior written consent of CITY nor shall the Contractor assign any moneys due or to become due to him/her hereunder, without the prior written consent of CITY. Any such assignment or sublet without such prior written consent shall be null and void and shall be a ground for termination for cause of this contract by CITY.

GC-9. QUANTITIES FURNISHED BIDDERS

A. Unit Price Contract. The estimates of quantities are only approximate and are for the purpose of comparing bids. CITY reserves the right to increase or decrease individual items in such amount as may be in CITY'S sole judgment, to CITY'S best interests depending upon conditions encountered or observed during the Project. It shall be CONTRACTOR'S responsibility to satisfy itself as to the accuracy of the estimates. The Contractor will be paid for the actual quantities of work finally installed or performed at the applicable unit prices stated in his/her proposal.

1. The unit price of an item of Unit Price Contract shall be subject to reevaluation and adjustment under the following conditions:

   i. If the total cost of a particular item of Unit Price Contract amounts to fifteen percent (15%) or more of the total Contract Price at the time of award and the variation in the quantity of that particular item of Unit Price Contract performed by CONTRACTOR differs by more than twenty-five percent (25%) from the estimated quantity of such item indicated in the Bid Form; and

   ii. If there is no corresponding adjustment with respect to any other item of Work; and

   iii. If CONTRACTOR thinks that CONTRACTOR has incurred additional expense as a result thereof; or if the CITY thinks that the quantity variation entitles the CITY to an adjustment in the unit price, either the CITY or CONTRACTOR may demand a Change in Contract Price. Such Change in Contract Price shall be based upon any increase or decrease in costs due solely to the variation above one hundred twenty-five percent (125%) or below seventy-five percent (75%) of the estimated quantity. If the quantity variation is such as to cause an increase in Contract Time necessary for completion, CONTRACTOR may request an extension of Contract Time for the Delay in completion resulting from performing the quantity in excess of one hundred twenty-five percent (125%) of the estimated quantity. If the parties are unable to agree on the effect of any such variation in the quantity of unit price work, either the CITY or CONTRACTOR may make a claim for an adjustment in the Contract Price and/or Contract Time in accordance with the General Conditions.

   Items identified as contingency items will be paid at the unit price regardless of variation in quantity of that particular item of Unit Price Work performed by CONTRACTOR.

B. Lump Sum Contract. The Contractor shall include in the contract sum all allowances named in the Contract Documents and shall cause the work so covered to be performed for such sums as the Engineer may direct, the contract sum being adjusted in conformity therewith. The Contractor declares that the

contract sum includes such sums for expenses and profit on account of cash allowances as he/she deems proper. No demand for expenses or profit other than those included in the contract sum shall be allowed. The Contractor shall not be required to employ for any such work persons whom he/she has reasonable objection.

GC-10. MAJOR CHANGES

A. If unforeseen conditions require a substantial change in the dimensions of a structure, location of underground utilities, or major variation of a similar nature from the original plans, such change shall be covered by a change order. The change order is to set forth in complete detail the nature of the change and reasons therefore, including compensation to be paid and time allotted the Contractor. The change order shall also detail whether the change constitutes an addition or reduction with respect to the original contract costs. Should additional or supplemental drawings be required, they will be furnished by the Engineer providing the Engineer determines the change is warranted.

B. During the progress of the work, if subsurface or latent physical conditions are encountered at the site differing materially from those indicated in the contract or if unknown physical conditions of an unusual nature, differing materially from those ordinarily encountered and generally recognized as inherent in the work provided for in the contract, are encountered at the site, the party discovering such conditions shall promptly notify the other party in writing of the specific differing conditions before they are disturbed and before the affected work is performed.

C. Upon written notification, the Engineer will investigate the conditions, and if it is determined that the conditions differing materially and cause an increase or decrease in the cost or time required for the performance of any work under the contract, and adjustment, excluding loss of anticipated profits, will be made and the contract modified in writing accordingly. The Engineer will notify the Contractor of the determination whether or not an adjustment of the contract is warranted.

D. No contract adjustment which results in a benefit to the Contractor will be allowed unless the Contractor has provided the required written notice.

GC-11. EXTRA WORK

A. CITY shall have the right to issue written change orders to Contractor within the general scope of the work without the consent of the Contractor and without notice to any surety of the Contractor. If for any reason extra work is ordered by CITY and the compensation for such extra work cannot be agreed upon in advance, such work will be paid for at the actual cost of the labor, materials, and field supervision required, with the addition of not to exceed a total of fifteen percent (15%) to cover general overhead and profit (including subcontractor's general overhead and profit), use of small tools, payment of insurance and

medical aid, taxes, and all other costs in connection therewith. If a fixed sum or unit prices can be agreed upon for any extra work that may be ordered, such sum and prices, together with a description of the work, shall be made a part of the written order. Such orders will be prepared by the Engineer in triplicate, with one (1) copy to CITY, one (1) to the Contractor and one (1) retained by the Engineer.

B. If during the progress of the work, the Contractor believes he/she is entitled to extra compensation for performing certain phases or items, any and all such claims must be promptly presented to CITY and the Engineer. Unless such claim is presented in writing within fifteen (15) days after it occurs, CITY may, at its discretion, reject the claim. CITY shall specifically reject claims of this nature that have been withheld by the Contractor for more than thirty (30) days.

GC-12. MONTHLY PAYMENTS

A. The Contractor shall file a monthly request for payment with the Engineer on the 20th day of each month for all work completed to the 20th day of the month. If monthly requests for payment are not received as stated, the CITY shall have the right to withhold payment for that month. The Engineer shall review Contractor's monthly requests for payment on the first day of the month for all work completed to the 20th day of the preceding month and shall certify such requests for payment. Progress payments will be made by the CITY for all work completed to the 20th day of the preceding month and duly certified by the Engineer, on or before the 10th day of each month in cash or interim warrants. These payments will be equal to ninety-five percent (95%) of the total amounts of the certified requests for payment. The CITY shall retain five (5) percent of the total amount owing the Contractor after the contract has been completed and accepted by the CITY for a minimum period of thirty (30) days. Should any liens or claims be filed during the retention period, the retained percentage will be held until a satisfactory agreement is reached between the CITY, the Contractor, and the Contractor's surety. Before final payment will be made by the CITY, Contractor agrees that it shall furnish the CITY with satisfactory evidence that all persons, including subcontractors, that have performed work or furnished materials pursuant to this Agreement and are entitled to a lien for their work or materials under the laws of the State of Idaho have been fully paid or are no longer entitled to such lien, and the Contractor shall file with the Clerk a notarized affidavit to that effect. Final payment will not be made until CITY has received a tax release from the Idaho State Tax Commission per GC-38.

B. Progress payments for materials shall be considered eligible only if the materials are jobsite, and accurate, clearly detailed invoices from the material supplier are furnished. The ownership of these materials shall, upon payment from CITY to the Contractor, be vested in CITY, and such materials may not be removed from the jobsite without written authorization of the Engineer.

C. The City may, but is not obligated to, withhold any payments to the Contractor, in addition to retained percentage, in such an amount or amounts as may be necessary to cover:

1. Payments that may be earned or due for just claims or labor or materials furnished in and about the work;

2. Defective and/or condemned and/or non-conforming work or materials not remedied;

3. Failure of the Contractor to make proper payments to a subcontractor;

4. Reasonable doubt that this contract can be completed for the balance then unpaid;

5. Damages to another Contractor where there is evidence thereof;

6. Payments that cover all taxes, excises and license fees due the State and its taxing entities whether or not these moneys are yet due and payable.

D. CITY shall have the right, but not the obligation, to disperse and shall have the right to act as agent for the Contractor for the limited purpose of dispersing such funds as have been withheld pursuant to this paragraph to the party or parties who are entitled to payment there from. In the event CITY elects to disperse such funds, CITY shall render to the Contractor a proper accounting of all such funds dispersed on behalf of the Contractor. Nothing herein shall create in such party or parties entitled to payment a cause of action against CITY for failure to exercise its rights pursuant to this section. Contractor further agrees that no cause of action shall accrue on behalf of the Contractor as a result of CITY's exercise of such right to disperse.

GC-13. TIME OF COMPLETION/LIQUIDATED DAMAGES

A. The date of completion for this Agreement shall be defined by the Instruction to Bidders included in the Contract Documents. Contractor agrees that time is of the essence in the performance of this Agreement, and that failure to complete this Agreement by such date will result in financial injury to CITY. Contractor further agrees that failure to complete this Agreement by such date shall subject Contractor to payment of liquidated damages to CITY. The Contractor also recognizes the delays, expense and difficulties involved in proving in a legal proceeding of the actual loss suffered by CITY occasioned by failure to complete the work on time. Accordingly, instead of requiring such proof, CITY and the Contractor agree that as liquidated damages for delay (but not as a penalty) the Contractor shall pay to CITY the sum of $3,000 per calendar day, which will be deducted by CITY for each and every calendar day that the date of final completion is delayed. Should such deductions exceed the outstanding amount of the Agreement, the Contractor and its surety shall be liable for the excess.

B. The Contractor herewith specifically waives claims for damages for any hindrance or delay. Contractor shall be granted extensions of time for which liquidated damages will not be claimed by CITY for the following reasons:

1. A delay caused the Contractor by any suit or other legal action against CITY (except a legal action instituted by the Contractor) regarding this Project shall entitle the Contractor to an equivalent extension of time unless the period of such delay exceeds ninety (90) days. When such period is exceeded, CITY will, upon request by the Contractor in writing, either negotiate a termination of the Agreement or grant a further extension of time, whichever shall be agreed.

2. Time lost by inclement weather, causing suspension of work, will entitle the Contractor to an extension equivalent to the total time so lost, whether it be a single continuous period or the accumulated total of several periods. Inclement weather is defined as that which, in the opinion of the Engineer, would seriously affect the progress of the work or the quality of the work.

3. Should unforeseen conditions require the performance under a change order or work more complex or difficult than that originally specified and shown on the plans, and such work, in the Contractor's opinion, requires more time to execute than the proportional increase in dollar value, the Contractor shall state to CITY and Engineer, in writing prior to the performance of such work, his/her estimate of the added time required for such work. CITY may, if such estimate be reasonable, allow an added extension to proportionate to the increase in the dollar value of the work.

C. If the performance of all or any portion of the work is suspended or delayed by the Engineer for an unreasonable period of time (not originally anticipated, customary, or inherent to the construction industry) and the Contractor believes that additional compensation and/or contract time is due as a result of such suspension or delay, the Contractor shall submit to the Engineer in writing a request for adjustment within seven (7) calendar days of receipt of the notice to resume work. The request shall set forth the reasons and support for such adjustment.

D. Upon receipt, the Engineer will evaluate the Contractor’s request. If the Engineer agrees that the cost and/or time required for the performance of the agreement has increased as a result of such suspension and the suspension was caused by condition beyond the control of and not the fault of the Contractor, its suppliers, or subcontractors at any approved tier, and not caused by weather, the Engineer will make adjustment as provided (excluding profit) and modify the agreement in writing accordingly. The Engineer will notify the Contractor of the determination whether or not an adjustment of the Agreement is warranted.

E. No Agreement adjustment will be allowed unless the Contractor has submitted the request for adjustment within the time prescribed.

F. No Agreement adjustment will be allowed under this clause to the extent that performance would have been suspended or delayed by any other cause, or for which an adjustment is provided for or excluded under any other term of condition of this Agreement.

GC-14. ABANDONMENT OF WORK

A. If the Contractor abandons the work for a period of twenty (21) days for any cause other than failure of CITY to make monthly payments or refuses to comply with the provisions of the plans and specifications, CITY shall have the right to notify the Contractor's surety and require said surety to complete the work in accordance with the aforesaid plans and specifications. In the event no liens or claims have been filed and CITY fails to make progress payments, the Contractor may then, at his/her option, cease operations until payments are resumed by notifying CITY of his/her intention to cease operations for this cause. Should the Contractor abandon the work, fail or refuse to complete the work embraced in this contract, or fail to pay just claims for labor and materials, CITY reserves the right to charge against the Contractor, and Contractor agrees to pay, all legal, engineering, or other costs caused by such abandonment, failure or refusal. The Contractor agrees that such legal costs shall also include CITY's costs of defending any suits in connection with such abandonment, failure or refusal and nonpayment of claims wherein CITY is made a co-defendant.

GC-15. AUTHORITY OF ENGINEER

A. The Engineer shall decide questions which may arise as to the quality and acceptability of materials furnished and work performed, and as to the manner of performance and rate of progress of the work; questions which may arise as to the interpretation of the plans and specifications; and questions as to the satisfactory and acceptable fulfillment of the terms of the Agreement.

B. The Engineer, including his/her employees and agents, shall at all times have access to the work wherever it is in preparation or progress and the Contractor shall provide proper facilities for such access and for inspection. Inspections by the Engineer shall be promptly made. If any work should be covered up without approval or consent of the Engineer, it shall be uncovered, if required by the Engineer, for examination. The costs associated with the uncovering of such non-approved work shall be the responsibility of Contractor and shall not be charged to CITY.

C. Reexamination of questioned work may be ordered by the Engineer and if so ordered, the work must be uncovered by the Contractor. If such work be found in accordance with the plans and specifications, CITY shall pay the cost of the reexamination and replacement. If such work is found not in accordance with the plans and specifications, the Contractor shall pay such costs.

D. If the performance of all or any portion of the work is suspended or delayed by the Engineer for an unreasonable period of time (not originally anticipated, customary, or inherent to the construction industry) and the contractor believes that additional compensation and/or Agreement time is due as a result of such

suspension or delay, the Contractor shall submit to the Engineer in writing a request for adjustment within seven (7) calendar days of receipt of the notice to resume work. The request shall set forth the reasons and support for such adjustment.

E. Upon receipt, the Engineer will evaluate the Contractor's request. If the Engineer agrees that the cost and/or time required for the performance of the Agreement has increased as a result of such suspension and the suspension was caused by conditions beyond the control of and not the fault of the Contractor, its suppliers, or sub-contractors at any approved tier, and not caused by weather, the Engineer will make an adjustment and modify the Agreement in writing accordingly. The Engineer will notify the Contractor of the determination whether or not an adjustment of the Agreement is warranted.

F. In making the Agreement adjustment a markup for profit will only be allowed on changed or extra work caused by the delay or suspension. No profit will be allowed on any other delay or suspension costs including, but not limited to, standby costs or extended indirect costs. Payment for changed and extra work will be made in accordance with section GC-11

G. No contract adjustment will be allowed unless the Contractor has submitted the request for adjustment within the prescribed time.

GC-16. PERFORMANCE AND PAYMENT BONDS

A. The Contractor shall execute a separate performance bond and payment bond, each in penal amounts at least equal to one hundred percent (100%) of the of the full Agreement price, such bonds to be executed by a corporate bonding company (surety) licensed to do business in the State of Idaho and which is acceptable to CITY. Such corporate bonding company (surety) shall be required to be named on the current list of "Surety Companies Acceptable on Federal Bonds" as published in the Treasury Department Circular Number 570. The premiums of such bonds shall be paid by Contractor. The performance bond shall be conditioned upon the Contractor's faithful performance of all the covenants and agreements on the part of the Contractor to be kept and performed at the times and in the manner set forth in the Agreement, including the repair or replacement where required, or the cost of repair or replacement, of all work performed under the terms of this Agreement. The payment bond shall be conditioned upon the payment to all persons, including subcontractors, who have, and fulfill, contracts for performing labor and furnishing materials in the prosecution of the work provided for in such Agreement, provided that every such payment bond shall be construed, regardless of its language, as incorporating within its provisions the obligation to pay those persons who furnish labor or materials as stated in the Contract Documents.

B. Such bonds shall remain in full force and effect during the term of this Agreement and during the terms of any warranty required by the specifications and shall be

held in the custody of CITY. The current power of attorney for the persons who sign for the surety company shall be attached to the bond. The power of attorney shall be sealed and certified with a "firsthand signature" by an officer of the surety. A facsimile signature shall not be acceptable to CITY.

C. If, at any time, a surety on any such bond is declared as bankrupt or loses its right to do business in the State of Idaho or is removed from the list of surety companies accepted on Federal bonds, the Contractor shall, within ten (10) days after notice from CITY to do so, substitute an acceptable bond (or bonds) in such form and sum signed by such other surety or sureties as may be satisfactory to CITY. The expense of such replacement bonds shall be borne by the Contractor. No further payments by CITY pursuant to this Agreement shall be deemed due nor shall be made until the new surety or sureties shall have furnished an acceptable bond to CITY.

GC-17. INSURANCE/CITY TO BE NAMED AS ADDITIONAL INSURED

A. The Contractor shall not commence work until he/she has obtained all insurance required under this section or until he/she has satisfied CITY in this respect; nor shall he/she allow any subcontractor to commence work until such subcontractor has also obtained such required insurance applicable to such subcontractor's work. The Contractor shall maintain such required insurance coverage throughout the term of this Agreement as will hold CITY harmless and shall indemnify CITY for any losses arising out of the Contractor's operations, including any contingent liability arising there from. The cost of such insurance shall be borne by the Contractor. The Contractor shall furnish copies of all insurance policies and/or certificates of insurance to CITY at the time of execution of this Agreement. Each policy shall include a provision to the effect that it shall not be subject to cancellation, or reduction in the amounts of its liabilities, or any other material change, until notice has been given in writing to CITY and the Engineer not less than fifteen (15) days prior to such action. Contractor shall further cause CITY to be named as an additional insured on all applicable insurance policies.

B. The Contractor shall take out and maintain during the term of this Agreement, statutory worker's compensation insurance for all employees who will work on this Project, and if any work is subcontracted, the Contractor shall require the subcontractor similarly to provide such insurance for all of the latter's employees unless they are included under the protection afforded by the Contractor.

C. The Contractor shall take out and maintain during the term of this Agreement comprehensive public and general liability insurance. The comprehensive public and general liability insurance shall have, at a minimum, a coverage limit of at least FIVE HUNDRED THOUSAND DOLLARS ($500,000.00) per occurrence, and ONE MILLION DOLLARS ($1,000,000.00) aggregate. Policies containing deductible clauses will not be acceptable.

D. The Contractor shall take out and maintain, during the term of this Agreement, builders' risk insurance which shall be written in completed value form, shall protect the Contractor and CITY against 'all-risks' of direct physical loss to buildings, structures, equipment and materials to be used in providing, performing

or completing the project. This insurance shall be written with limits not less than the insurable value of the project at completion. This insurance shall include coverage while equipment or materials are in warehouses, during installation, during testing, and after the project is completed, but prior to final payment.

E. Contractor's Responsibility for Materials. The Contractor shall be responsible for all materials and work performed until final acceptance by CITY.

F. Contractor shall require all subcontractors to maintain the above referenced insurance requirements and shall verify that such requirements have been met by requiring all subcontractors to provide certification, therefore.

GC-18. PATENT ROYALTIES AND PROCESS FEES

A. The Contractor shall furnish CITY a license or licenses for the use of any process or processes in connection with this Project. The Contractor shall include in the unit price bid any patent royalties or license fees for equipment installed or construction methods used.

GC-19. CONTRACTOR RESPONSIBLE FOR WORK

A. The Contractor shall be responsible for all work until its acceptance by the CITY.

B. The Contractor shall be responsible for all quality control including but not limited to tests and inspections, correction, removal of defective work.

1. Tests and Inspections

a. Contractor shall give Engineer timely notice of readiness of the Work for all required inspections, tests, or approvals and shall cooperate with inspection and testing personnel to facilitate required inspections or tests.

b. Contractor shall employ an independent testing laboratory or testing agency and shall be responsible for arranging and shall pay for all specified tests, inspections, and approvals (including tests, inspections, and approvals to be paid for on a cash allowance basis) required for CITY's and Engineer's acceptance of the Work at the site except: costs incurred in connection with tests or inspections as otherwise specifically provided in the Contract Documents.

c. If Laws or Regulations of any public body having jurisdiction require any Work (or part thereof) specifically to be inspected, tested, or approved by an employee or other representative of such public body, Contractor shall assume full responsibility for arranging and obtaining such inspections, tests, or approvals, pay all costs in connection

therewith, and furnish Engineer the required certificates of inspection or approval.

d. Contractor shall be responsible for arranging and obtaining and shall pay all costs in connection with any inspections, tests, or approvals required for Owner's and Engineer's acceptance of materials or equipment to be incorporated in the Work; or acceptance of materials, mix designs, or equipment submitted for approval prior to Contractor's purchase thereof for incorporation in the Work. Such inspections, tests, or approvals shall be performed by organizations acceptable to City and Engineer.

e. If any Work (or the work of others) that is to be inspected, tested, or approved is covered by Contractor without written concurrence of Engineer, it must, if requested by Engineer, be uncovered for observation.

f. Uncovering Work as provided in paragraph e. above shall be at Contractor's expense unless Contractor has given Engineer timely notice of Contractor's intention to cover the same and Engineer has not acted with reasonable promptness in response to such notice.

GC-20. USE OF COMPLETED PORTION

A. CITY reserves the right to use and occupy any portion of the improvement which has been completed sufficiently to permit use and/or occupancy, and such use and/or occupancy shall not be construed as an acceptance of the work as a whole or any part thereof. Any claims which CITY may have against the Contractor shall not be deemed to have been waived by such use and/or occupancy.

GC-21. SIGNATURES

A. A proposal made by a corporation shall be signed and sealed by the legally authorized officers of said corporation. If awarded the contract, the Agreement shall also be executed by proper authorized officers and be affixed with the corporate seal. If a proposal or contract is signed by an agent, such agent shall furnish satisfactory written evidence of the agent's authority to sign as the legal representative of the bidder. An authorized partner of a co-partnership may sign the Agreement subject to the approval of the Attorney, who may, at his/her discretion, require each and every member of the co-partnership to sign the Agreement.

GC-22. ORDERS TO BEGIN WORK

A. The successful bidder shall not begin work until after the Agreement has been executed and the surety bond and insurance has been approved by the Attorney. The order for the Contractor to begin work shall be issued by the Engineer by a written "Notice to Proceed".

GC-23. ORDER OF WORK

A. The Agreement period and time of completion will be as set forth in the Instruction to Bidders included in the Contract Documents.

B. GC-13 "Time of Completion/Liquidated Damages" of the General Conditions shall apply to interim as well as final completion dates.

C. The specific details of the order of work will be established by the Engineer before construction begins. Before the successful bidder is authorized to begin work, he/she shall attend a pre-construction conference with the Engineer. At this time the successful bidder shall present a written schedule for the entire Project, specifying the beginning and completion dates for each phase of work. Once approved by the Engineer, this schedule shall be adhered to by the Contractor and he/she shall employ the necessary work force and equipment to maintain such schedule. Contractor further agrees that the approval by the Engineer of such schedule shall not create any liability to the Engineer or CITY for Contractor's means, methods, sequences, techniques or site safety.

GC-24. EFFICIENCY OF OPERATION/LICENSING

A. The work embraced in this Project shall be started at the earliest possible date after issuance of the Notice to Proceed, and shall be prosecuted regularly and without interruption thereafter, unless otherwise directed by the Engineer. The Contractor shall furnish work force and equipment sufficient to accomplish full completion of the work within the time specified in the proposal and Agreement. The Contractor shall at all times employ efficient and experienced workers. Contractor shall also require and verify that all workers and subcontractors are licensed in accordance with law and/or regulation.

GC-25. PROTECTION OF WORK AND PROPERTY

A. The Contractor shall exercise particular care in protecting surrounding buildings, structures, trees, and property from injury during the demolition and construction operation and shall be responsible for their protection and shall repair or compensate the CITY thereof for any damage which may result from such demolition and construction operations. The expense of such compensation or repair shall be borne by Contractor and shall not be the responsibility of CITY.

B. The Contractor shall exercise particular care in protecting trees, located on private or public property, from injury during the demolition and construction operations. If the Contractor's duties under this Agreement shall cause any damage, mutilation, or destruction whatsoever, of any tree, due to Contractor's need to remove, top, excavate, fill, or compact the roots of such tree, or by the placement or storage of any materials which are hazardous to trees, near such tree, the Contractor shall:

1. Inform the City Engineer in writing of such need; and

2. Plot the location of such tree on the site plan which is the subject of this Agreement; and

3. Comply with all permit requirements as set forth in the Community Forest Ordinance, Moscow City Code §5-8-1 *et seq*.

C. Any utilities damaged by the Contractor shall be repaired by the Contractor and the Contractor shall be responsible to maintain temporary service until such damage is repaired. The expense of such repair and/or temporary service shall be borne by Contractor and shall not be the responsibility of CITY.

D. The Contractor shall provide and maintain temporary sidewalks, warning lights, barricades and other preventive means to safeguard pedestrian and vehicular traffic around the construction, as deemed necessary by CITY.

E. During all construction operations, the Contractor shall construct and maintain such facilities as may be required to provide access by all property owners to their property. No person shall be cut off from access to his/her residence or place of business unless the Contractor has made a special arrangement with the affected persons.

F. Construction operations and parking of vehicles shall be confined to areas designated by CITY. Contractor shall consult the proper traffic regulatory authorities regarding the routing of trucks and other vehicles and shall follow the direction of such authorities.

G. Any structures, tanks, mechanisms or equipment damaged by the Contractor shall be repaired at the Contractors expense. Any fines or penalties incurred by CITY as a result of any damages to the facilities shall be paid or mitigated by the Contractor.

GC-26. RESPONSIBILITY FOR SAFETY

A. The Contractor shall be responsible for the safety of his/her work, equipment, and materials, until the finished project is accepted by CITY.

GC-27. GUARDS AND BARRICADES

A. The Contractor shall erect and maintain such barricades, detour signs and warning lights as will effectively mark any hazards or detours and the Contractor shall be liable for any damage occasioned by his/her acts or negligence, or the acts or negligence of his/her employees, agents or subcontractors, and shall indemnify CITY against loss and/or liability for any such damage, acts or negligence. Traffic signs shall be in accordance with the standards presented in the most current edition of the "Manual on Uniform Traffic Control Devices".

GC-28. EXISTING TRAFFIC SIGNS AND FACILITIES

A. Existing traffic and street name signs which will interfere with construction shall be removed by the Contractor and stored in a safe place. These signs shall not be removed until the Contractor has obtained the consent of the traffic regulatory authorities having jurisdiction and until the necessary measures have been taken to safeguard traffic after the signs have been removed. Preservation and maintenance of the signs shall be the sole responsibility of the Contractor. As soon as sign location no longer interferes with work, the Contractor shall reset all such signs at locations indicated by the traffic regulatory authorities having jurisdiction, in cooperation with the Engineer and Streets Department. All costs incurred in work outlined above shall be considered as incidental to the construction contract and shall be borne by Contractor.

GC-29. MAINTAINING POSTAL SERVICE

A. Postal service shall be maintained in accordance with instructions of the U.S. Post Office Department. The Contractor shall be responsible for moving mailboxes to temporary locations designated by the Post Office Department, and at completion of the work he/she shall replace them in locations and in condition satisfactory to the Post Office Department.

B. It will be the Contractor's responsibility to contact the U.S. Post Office Department for their requirements in maintenance of postal service and to follow those requirements.

C. In cases where posts upon which the box or boxes are fastened are in such condition that they cannot be reset, the Contractor shall furnish posts for this purpose at his/her own expense.

D. All costs incurred in work outlined above shall be considered as incidental to the construction contract and shall be borne by Contractor.

GC-30. EMERGENCY WORK

A. The Contractor will not be allowed added compensation for any emergency work performed on Sundays or legal holidays unless such work is ordered in writing by the Engineer.

GC-31. SUPERVISION OF WORK

A. During the progress of the work, the Contractor shall employ a competent superintendent and any necessary assistants at the job site. The superintendent shall not be changed except with the approval of the Engineer (or upon the order of the Engineer should the superintendent be or become unsatisfactory to the Engineer) unless the superintendent proves to be unsatisfactory to the Contractor and ceases to be in his/her employ. The superintendent shall represent the Contractor in the Contractor's absence and all directions given to him/her shall be as binding as if given to the Contractor. Important directions shall be so confirmed on written request in each case.

B. The Contractor shall give efficient supervision to the work, using his/her best skill and attention. He/she shall carefully study and compare all drawings, specifications and other instructions and shall at once report to the Engineer any error, inconsistency or omission which he/she may discover, but he/she shall not be held responsible for their existence of discovery.

GC-32. CORRECTION AND COMPLETION OF WORK

A. Correction of Work before Final Payment:

1. The Contractor shall promptly remove from the premises all materials condemned by the Engineer as failing to conform to the Agreement, whether incorporated in the work or not, and shall re-execute any work condemned by the Engineer as failing to conform to the Agreement, and the Contractor shall promptly replace such non-conforming materials and re-execute such non-conforming work in accordance with the Agreement, such costs of replacement and re-execution to be borne by Contractor at no additional expense to CITY.

2. If the Contractor does not re-execute such non-conforming work and/or remove and replace such non-conforming materials within a reasonable time, fixed by written notice of the Engineer, then and in that event CITY may remove them and may store the material at the expense of the Contractor. If the Contractor does not pay the expenses of such removal within ten (10) days' time thereafter, CITY may, upon ten (10) days written notice, sell such materials at auction or at private sale and shall account to Contractor for the net proceeds thereof, after deducting all the costs and expenses of such removal, storage, sale and repair. Nothing contained herein shall relieve the Contractor from his/her responsibility to

perform the work in accordance with the Contract Documents, nor to reduce the liability of the Contractor to replace such non-conforming materials or re-execute such non-conforming work.

B. Correction of Work after Final Payment:

1. Neither the final certificate, nor payment, nor any provision in the Contract Documents shall relieve the Contractor of responsibility for faulty and/or non-conforming materials or workmanship and unless otherwise specified, he/she shall remedy any defects due thereto and pay for any damage to other work resulting there-from, which shall appear within a period of one (1) year from the date of final acceptance. CITY shall give notice of observed defects with reasonable promptness.

C. Deductions for Uncorrected Work:

If the Engineer and CITY deem it inexpedient to correct work injured or done not in accordance with the Agreement, an equitable deduction from the agreement price and/or extended warranty shall be made, therefore.

GC-33. SUBSTITUTES CLAUSE

A. In order to establish a basis or quality, certain processes, types of machinery and equipment, kinds of material, may be specified on the plans or herein, by designating a manufacturer by name and referring to his/her brand or product designation. It is not the intent of these specifications to exclude other processes, equipment or materials or a type and quality equal to those designated.

B. The materials, products and equipment described in the bidding documents establish a standard or required function, dimension, appearance and quality to be met by any proposed substitution.

C. Approval of alternate and equal specified equipment and material will be only by addenda issued by the Engineer at least five (5) days prior to bid opening. Requests for approval of alternate equipment and materials manufacturers must come from the manufacturer or bidder at least ten (10) days prior to bid opening. All such requests must be accompanied by drawings and specifications in sufficient detail to allow the Engineer to determine whether or not the equipment and materials proposed is equal to that specified. The determination as to whether or not the proposed substitute equals that specified, shall rest solely with the City, based upon the opinion of the Engineer. The burden of proof of the merit of the proposed substitute shall be upon the proposer.

D. No extra compensation will be allowed the Contractor for any changes required to adopt the substitute equipment; therefore, the Contractor's proposal, including the approved alternate, shall include all costs for any modifications to the plans such as structural and foundation changes, additional piping or changes in piping, electrical changes, or any other modifications which may be necessary or required for approval and adoption of the proposed alternate equipment.

GC-34. DETAILED BREAKDOWN OF CONTRACT PRICE

A. The Contractor shall, within ten (10) days after receipt of the notice to proceed, submit a complete breakdown of all lump sum bid items showing the value assigned to each part of the work, including an allowance for profit and overhead. Upon acceptance of the breakdown of the contract price by the Engineer, it shall be used as the basis for all requests for payment.

GC-35. CONTRACTOR'S RESPONSIBILITY FOR UTILITY PROPERTIES AND SERVICE

A. Certain utilities and structures which are expected to be adjacent to or encountered in the work are shown on the plans. It is known that there are discrepancies and omissions in the locations and quantities of existing utilities and structures shown. Those shown are for the convenience of the Contractor only, and no responsibility is assumed by either the City or the Engineer for their accuracy or completeness.

B. It is the Contractor's responsibility to notify "CALL BEFORE YOU DIG" at nationwide #811 prior to excavating and to comply with Idaho Code Section 55-2207 and all other applicable laws and regulations regarding the protection of underground utilities.

C. At points where the Contractor's operations could cause damage which might result in considerable expense, loss, and inconvenience when his/her operations are adjacent to or near a railway, telephone, television, power, oil, gas, water, sewer, irrigation, or other private or municipal systems, the operations shall be suspended until all arrangements necessary for the protection thereof have been made by the Contractor.

D. The Contractor shall notify all utility offices which are affected by the construction operation at least forty-eight (48) hours in advance of such construction. Under no circumstances shall the Contractor expose any utility without first requesting permission from and being granted to do so from the affected agency. Once permission has been granted, Contractor shall locate, if necessary, and expose all existing underground utilities in advance of any trenching operation. Hand digging shall be required within twenty-four (24) inches of a marked utility.

E. The Contractor shall protect all other poles from damage. If interfering power poles, telephone poles, guy wires, or anchors are encountered, Contractor shall notify the Engineer and the affected utility company at least forty eight (48) hours in advance of construction operations to permit the necessary arrangements to

be made with the affected utility company for protection or relocation of the interfering structure.

F. The Contractor shall be solely and directly responsible to the CITY and operators of such properties for any damage, injury, expense, loss, inconvenience, delay, suits, actions, or claims, of any character brought because of any injuries or damage which may result from the carrying out of the work to be done under the Agreement. Contractor shall hold harmless, indemnify and defend CITY from any such claims.

G. In the event of interruption to domestic water, sewer, storm drain, or to other utility services as a result of accidental breakage, or as a result of being exposed or unsupported, the Contractor shall promptly notify the proper authority. After such notification, the Contractor shall cooperate with said authority in restoration of service as promptly as possible and the Contractor shall bear all costs of repair. In no case shall interruption of any water or utility service be allowed to exist beyond working hours unless prior approval is received from the Engineer.

H. In the event the Contractor encounters utility lines that interfere with trenching, the Contractor may, by obtaining prior written approval of the appropriate utility company, cut the service, dig through and restore the service with similar and equal materials at the Contractor's expense.

GC-36. STREET CLEANUP DURING CONSTRUCTION

A. The Contractor shall clean all spilled dirt, gravel, or other foreign material caused by the construction operations from all streets and roads at the conclusion of each day's work.

GC-37. CLEANUP

A. The Contractor shall at all times during the work keep the premises clean and orderly. He/she shall promptly remove all waste materials and rubbish. All directions from the Engineer and all authorized public officials having jurisdiction over health and safety shall be obeyed.

GC-38. PROOF OF TAX PAYMENT

A. The Contractor shall, within ten (10) days after receipt of the Notice of Award, furnish the Idaho State Tax Commission with a completed State of Idaho Form WH-5, PUBLIC WORKS CONTRACT REPORT (http://tax.idaho.gov/forms/EFO00168_04-28-2011.pdf). Copies of the form may be obtained from CITY, or from the Idaho State Tax Commission.

B. The Contractor shall furnish evidence that he/she has paid all state and local taxes which have become due and payable and that he/she has secured payment of state and local taxes which have accrued, but which are not due.

CITY shall not make final payment to Contractor until a tax release (http://tax.idaho.gov/forms/EFO00234_04-27-2011.pdf) from the Idaho State Tax Commission has been received by CITY.

GC-39. HOLD HARMLESS REQUIREMENT

A. In addition to other rights granted CITY by the Contract Documents, the Contractor shall indemnify and save harmless CITY, its officers and employees, from all suits, actions, or claims of any character brought because of any injuries or damages received or sustained by any person, persons, or property on account of the operations of the Contractor or his/her subcontractors; or on account of or in consequence of any neglect in safeguarding the work; or through use of unacceptable materials in constructing the work; or because of any act or omission, neglect, or misconduct of the Contractor or his/her subcontractors; or because of any claims or amounts recovered from any infringements of patent, trademark or copyright; or from any claims or amounts arising or recovered under the Workmen's Compensation Act or any other law, ordinance, order or decree.

GC-40. JURISDICTION AND DISPUTE RESOLUTION

A. Either CITY, or Contractor, may request mediation of any Claim submitted to Engineer for a decision before such decision becomes final and binding. A mediator with a background in construction litigation shall be selected by mutual agreement. In the event the parties cannot mutually agree upon a mediator, the Trial Court Administrator for the Second Judicial District shall submit a list of three (3) mediators to the parties. Each party will be allowed to strike one (1) of the listed mediators, Contractor proceeding first and CITY second. The remaining person shall then be the mediator. Costs of the mediation shall be borne equally by the parties.

B. CITY and Contractor shall participate in the mediation process in good faith. The process shall be concluded within sixty (60) days of filing of the request.

C. If the Claim is not resolved by mediation, Engineer’s action or denial shall become final and binding thirty (30) days after termination of the mediation unless, within that time period, CITY or Contractor:

1. agrees with the other party to submit the Claim to another dispute resolution process; or

2. gives written notice to the other party of the intent to file an action in the Second Judicial District of the State of Idaho which court, the parties agree, is the court with jurisdiction to hear the dispute. The action must then be filed not later than sixty (60) days after substantial completion of the Project.

GC-41. PERMITS AND LICENSES

A. The Contractor shall obtain and pay for all permits and licenses, including but not limited to the following:

B. Those required by the Moscow City Code, such as:

Community Forestry Ordinance	§5-8-1 et seq.
Building Code	§7-1-1 et seq.
Plumbing Code	§7-1-2 et seq.
Electrical Code	§7-1-3 et seq.
Gas Code	§7-1-4 et seq.
Contractor Licensing Ordinance	§7-16-1 et seq.

C. Those required by the Idaho Code or other State Law.

D. Those required by the Code of Federal Regulations or other Federal Law.

GC-42. ENVIRONMENTAL MATTERS

A. Contractor shall comply with all statutes and regulations regarding environmental matters, including, but not limited to, matters of health, safety, exposure, disposal, reporting, mitigation, etc.

GC-43. NO THIRD-PARTY BENEFICIARIES

A. No claim as a third-party beneficiary under this Agreement by any person other than Contractor shall be made or shall be valid against CITY, and CITY shall not be liable for or be held to pay any money to such person.

GC-44. COMPLIANCE WITH GRANT CONDITIONS

A. Contractor shall comply with all conditions of, and all laws applicable to, and all policies, practices and procedures of the City applicable to, any federal, state or local grant received by the City or Contractor at any time with respect to this contract or with respect to the provision, performance or completion of the work.

SECTION 3

PLANS AND SPECIFICATIONS

CITY OF MOSCOW
STANDARD CONSTRUCTION SPECIFICATIONS

PUBLIC WORKS DEPARTMENT

ENGINEERING DIVISION

STANDARD CONSTRUCTION SPECIFICTATIONS

Modified for the City of Moscow Lilly Street Reconstruction 'A' St. to Third St.
Construction Standards – All work shall be completed according to the project drawings and specifications. The project specifications supplement the City of Moscow Standard Construction Specifications and Drawings. In case of conflict, the most stringent requirement applies.
Idaho Standard Public Works Construction (ISPWC) Specifications and Details also apply where specifications or details are not provided in the project drawings and specifications or the City of Moscow Standards.

CITY ENGINEER:
SCOTT BONGTRAGER, P.E.

TABLE OF CONTENTS

ENGINEERING SPECIFICATIONS.....1
ES-1. SCOPE OF WORK.....1
ES-2. TRAFFIC CONTROL/R.O.W USE PERMITS.....1
ES-3. MATERIALS.....3
ES-4. REMOVALS AND DISPOSALS.....3
ES-5. EARTHWORK.....4
ES-6. SUBGRADE SEPARATION GEOTEXTILES.....5
ES-7. CRUSHED ROCK BASE.....6
ES-8. SOFT SPOT REPAIR.....9
ES-9. WATERING.....9
ES-10. WEIGHING.....10
ES-11. CONCRETE.....10
ES-12. CONCRETE CONSTRUCTION REQUIREMENTS.....12
ES-13. CONCRETE CURB.....16
ES-14. CONCRETE SIDEWALK.....18
ES-15. SUPERPAVE HOT MIX ASPHALT.....20
ES-16 CEMENT CONCRETE PAVEMENT.....22
ES-17. ADJUSTMENT OF GATE VALVE BOXES, MONUMENTS, CATCH BASINS, CATCH INLETS, AND MANHOLES.....27
ES-18. MANHOLES AND CATCH BASINS.....28
ES-19. TRENCH EXCAVATION AND BACKFILL.....30
~~ES-20. PIPE.....38~~
~~ES-21 GATE VALVES AND VALVE BOXES.....46~~
~~ES-22. FIRE HYDRANTS.....47~~
ES-23. STORM AND SANITARY CONNECTIONS.....50
ES-24. STREET / ALLEY CUT REPAIR.....52
ES-25. EROSION AND SEDIMENT CONTROL.....52
ES-26 STORMWATER RUNOFF CONTROL.....52
ES-27. IMPORTED TOPSOIL.....52
ES-28 SEEDING, SOD, AND INFIELD SURFACE REPAIR.....53
ES-29. TREE TRIMMING.....54
ES-30. INSPECTION.....54
ES-31. WORKMANSHIP AND CLEAN UP.....55
ES-32. MOBILIZATION.....55

ENGINEERING SPECIFICATIONS

ES-1. SCOPE OF WORK

The scope of work for the project is as set forth in the project specific plans and specifications.

The intent of the contract is to provide for the construction and completion in every detail of the work described.

The City reserves the right to make, at any time during the progress of the work, such changes in quantities and such alterations in the scope of work as are necessary to satisfactorily complete the project and the Contractor shall perform the work as altered. Compensation for change in scope of work will be in accordance with the project specific contract documents.

Unless otherwise noted, all labor, materials, and equipment necessary for the execution and completion of the work shall be furnished by the Contractor.

ES-2. TRAFFIC CONTROL/R.O.W USE PERMITS

2.1 Traffic Control

See Section 1103 of the Amendments to the Standard Specifications for additional requirements.

A. The Contractor shall obey all rules, laws, ordinances and regulations of all traffic regulatory authorities having jurisdiction regarding the closing or barricading of public streets. Work shall not begin until the proper permits have been acquired and all required traffic control devices are in place.

B. **Prior to commencement of work, the Contractor shall submit to the Engineer for review, Traffic Control Plan(s) created by an *ATSSA or ESC certified Traffic Control Supervisor.* The plan shall be consistent with requirements detailed in the current edition of the Manual on Uniform Traffic Control Devices (MUTCD) and shall include identification of detour routes for pedestrians. All traffic control devices shall be MUTCD approved, and installed and maintained by *ATSSA or ESC certified Traffic Control Technicians.* In the event where flagging is required to control traffic flow around a work zone, all flaggers shall have a *current ATSSA or ESC flagging card.***

Traffic control plans for work within State of Idaho highway right-of-way must also be approved by the Idaho Transportation Department.

C. The work shall be carried out so as to cause a minimum of dislocation of normal commercial pursuits. Traffic must be kept open on roads and/or streets where no detour is possible. The Contractor shall, in addition to other requirements contained herein, without further notification or other order, provide, erect, and maintain at all times during the progress or temporary suspension of the work,

barricades, fences, signs, flaggers, or other protection in accordance with the most current edition of the "Manual on Uniform Traffic Control Devices" and shall provide, keep, and maintain such danger lights, signals, and flaggers, as may be necessary or ordered by the Engineer and/or traffic regulatory authorities having jurisdiction to ensure the safety of the public as well as those engaged in connection with the work. All barricades and obstructions shall be protected by signal lights which shall be suitably distributed across and along the roadway and which shall be kept burning from one hour before sunset until one hour after sunrise and at other times as vision is obscured by fog, smoke, or dust.

D. The Contractor shall promptly reopen streets and driveways to the public after construction work requiring their closure is completed, and all safety issues have been resolved. Local traffic shall be provided access to private properties at all times, except during necessary stages of construction when it is impractical to carry on the construction and maintain traffic simultaneously, such as for the placing of hot mix asphalt pavement, placing and curing of Portland cement pavement, and deep sewer excavation which prohibits safe travel of vehicular traffic. No private driveway may be closed except as provided here-in, or unless permission is given the Contractor by the owner of the property affected. Emergency traffic such as police, fire, and disaster units shall be provided reasonable access at all times. The Contractor shall be solely responsible for any damages which may result from failure to provide such reasonable access.

E. The Contractor shall take every precaution to protect pedestrian, bicycle and vehicular traffic. Whenever, in the opinion of the Engineer, the Contractor has not provided sufficient or proper safety precautions and safeguards, he/she shall do so immediately, and to whatever extent the Engineer directs at no additional cost to the City. Should the City Engineer deem it necessary to augment the traffic control devices and the Contractor be unresponsive or unwilling to do so, the Contractor will be charged the customary rental rate and force account charges for the required personnel to bring the site into compliance with the MUTCD.

2.2 Right of Way Use Permits

A. All street and sidewalk closures require a City issued Street Closure Permit.

B. Work within public right of way requires a City issued Right of Way use permit.

C. Work within State of Idaho highway right-of-way requires an Idaho Transportation Department (ITD) permit. These permits must be obtained through the City; not directly from ITD.

2.3 Payment: Traffic Control

Measurement and Payment shall be made in accordance with the ISPWC 2020 Edition

~~Traffic control will be paid for as incid fic bid item for traffic control included in the proposal; OR, as a lump sum amount if traffic control is included~~

as a separate pay item in the proposal. Lump Sum price for traffic control includes furnishing, installing and maintaining the required devices to comply with MUTCD requirements.

ES-3. MATERIALS

All materials shall be new, free of defects, manufactured in the USA, and shall be furnished and installed according to the manufacturer's specifications.

ES-4. REMOVALS AND DISPOSALS

The Contractor shall be responsible for all removals indicated on the Plans and in the Specifications, and as may be necessary to complete the work in accordance with the true intent and meaning of the drawings and the details.

The Contractor shall patch, repair, and/or replace all existing work immediately adjacent to the newly constructed areas, or where removals are made, so that such adjacent work is left in the same state as their original condition. Such applications specifically shall apply to private driveways with the intent that all such driveways will be left with a smooth consistent and constant grade constructed of the same material and to the same specifications as originally used in constructing the driveway.

~~When s~~ ~~ions will~~
identify ill be stored.
Any ma ecome the
~~property~~

THE OWNER RESERVES THE RIGHT TO SALVAGE ITEMS NOTED FOR DEMOLITION. CONTRACTOR SHALL DISPOSE OF ALL ITEMS NOT SALVAGED BY THE OWNER. MATERIALS TO BE SALVAGED SHALL BE DELIVERED TO THE OWNER, COORDINATE WITH OWNER.

The Contractor may dispose of waste material in Contracting Agency-owned sites if the Specifications or the Engineer permits it. Otherwise, the Contractor shall arrange to dispose of waste at no expense to the Contracting Agency.

The Contractor shall acquire all permits and approvals required for the use of the disposal site. The cost of any such permits and approvals shall be included in the Bid prices for other Work.

The Contractor shall provide the Engineer the location of all disposal sites to be used and also provide copies of the permits and approvals for such disposal sites before any waste is hauled off the project.

The Contractor shall protect, indemnify, and save harmless the Contracting Agency from any damages that may arise from the Contractor's activities in making these arrangements. Any action required to satisfy any permit and/or any approval requirements in a Contractor-provided disposal site shall be performed by the Contractor at no additional expense to the Contracting Agency.

Removals and disposals will be paid by lump sum or unit price:

The price shall include all costs incurred to remove and dispose of the items bid including labor and equipment and other incidental costs.

ES-5. EARTHWORK

5.1 Excavation

All excavation shall be unclassified, except that which is required for the installation of pipe (storm, sanitary, water, drain), which is classified as trench excavation.

This work shall consist of excavation and disposal of all material, not being removed under some other item, which is encountered within the limits of the work necessary for the construction in accordance with the Specifications and in reasonable close conformity with the lines, grades, or thicknesses shown on the plans, or established by the Engineer.

This work shall include all excavation performed under this item regardless of the material encountered.

This work shall include the removal and disposal of any structure or any miscellaneous obstructions which are visible or are indicated on the plans which encroach upon or otherwise obstruct the work and for which a separate bid is not taken.

This work shall also include the preparation of the subgrade when the subgrade is not on a fill section. Subgrade elevation shall be below the gravel base elevation of pavement as indicated on the plans, and shall conform to the crown of the finished pavement surface. All depressions or ruts containing water shall be drained, as arranged with the Engineer. The entire surface shall be bladed to remove inequalities and secure a uniform surface. Line and grade stakes will be provided once by the Engineer, or his/her representative. The Engineer, or his/her representative, will set one set of stakes at fifty (50) foot intervals and at closer intervals where necessary. The subgrade shall be brought to a firm unyielding surface, true to line, grade, and cross section, by rolling and processing with equipment generally used for this purpose and acceptable to the Engineer. All soft, spongy, or yielding spots, which may be ordered to be removed by the Engineer, shall be entirely removed and replaced with geotextile and suitable rock material and thoroughly compacted to the satisfaction of the Engineer.

5.2 Structural Fill

This work shall consist of furnishing and placing selected material in one or more courses to form a stable roadbed in accordance with these specifications and in conformity with the Plans.

Structural fill (also ‘Borrow’ or ‘Embankment’) may consist of naturally occurring sand, sand gravel, sand and rock mixtures, decomposed granites, and native loess or clays. Sand and rock mixtures shall contain sufficient sand to fill the voids of the larger gravel

and stone to permit the required compaction. All borrow must be obtained from designated or approved sources. Structural fill shall be free of roots, bark, topsoils or other organic materials.

The surface upon which the structural fill is to be placed shall conform to the established lines and grades and shall be smooth and uniform, having been cleared of all vegetation, roots, stumps, topsoil, and foreign material.

The Contractor shall use necessary precautions in loading borrow to assure reasonable uniformity in grading.

Borrow shall be compacted with modern, efficient, compacting equipment satisfactory to the Engineer.

Embankment shall be placed in successive horizontal layers not exceeding eight (8) inches in loose thickness. All embankment shall be compacted to at least ninety-five (95) percent of the maximum density in accordance with AASHTO T-99. At all locations that are inaccessible to a roller, the embankment shall be brought up in horizontal layers and compacted thoroughly with mechanical tampers. The horizontal layers shall not exceed eight (8) inches in loose thickness. The compacting equipment may be of any type provided they are capable of compacting each lift of the material to the specified density.

5.3 Payment

Measurement and Payment shall be made in accordance with the ISPWC 2020 Edition

The accepted quantit the per cubic yard unit price or by lump sun the proposal or measured in the field, shall be used to compute the final payment, exclusive of any extra work ordered by the Owner or his/her representatives, as provided under Section GC-11, Extra Work.

The accepted quantities of STRUCTURAL FILL will be paid for by per cubic yard unit price or by lump sum. The unit price per cubic yard shall include all materials, labor, equipment and other costs incidental to furnishing and placing the borrow as herein specified and as shown on the plans.

ES-6. SUBGRADE SEPARATION GEOTEXTILES

6.1 Materials

Geotextile shall be Type II, nonwoven or woven, as set forth in **Section 718.07 – Subgrade Separation Geotextile Property Requirements** of the latest edition of the Idaho Transportation Department's Standard Specifications for Highway Construction.

6.2 Construction Requirements

Geotextile shall be furnished and installed in accordance with **Section 640 – Construction Geotextiles** of the latest edition of the Idaho Transportation Department's Standard Specifications for Highway Construction.

6.3 Payment

Measurement and Payment shall be made in accordance with the ISPWC 2020 Edition

Geotextile will be [illegible]re yard, furnished and installed.

ES-7. CRUSHED ROCK BASE

7.1 Description

This work shall consist of furnishing and placing one or more courses of aggregate on a prepared surface in accordance with these Specifications and in reasonable close conformity with the lines, grades, thicknesses and typical sections shown on the Plans and/or established by the Engineer.

The Contractor shall make their own arrangements for obtaining crushed rock base material and shall designate the source of same in ample time to permit sampling and testing by the Engineer.

7.2 Aggregate

A. 3/4" (-) Aggregate shall conform to the following gradation:

Sieve Size	Percent Passing
1 inch	100
¾ inch	90 – 100
No. 4	40 – 65
No. 8	30 – 50
No. 200	3 – 9

The sand equivalent shall not be less than 30 if 5 percent or more of the material passes the No. 200 sieve. Sand equivalent will not be required if less than 5 percent passes the No. 200 sieve.

B. 1-1/4" (-) Aggregate shall conform to the following gradation:

Sieve Size	Percent Passing
1-1/2 inch	100
1 inch	90 – 100
½ inch	60 – 80
No. 4	35 – 60
No. 8	25 – 50

No. 30	10 – 30
No. 200	2 – 9

The sand equivalent shall not be less than 30 if 5 percent or more of the material passes the No. 200 sieve. Sand equivalent will not be required if less than 5 percent passes the No. 200 sieve.

7.3 Test Methods

Tests shall be made in accordance with the following applicable standard methods:

Field determination of density of soil in-place and percent compaction.	Idaho T-74
Compaction standard for coarse granular materials by use of the vibratory spring-loaded compactor.	Idaho T-74
Moisture density relations using a 5.5 lb. rammer and 18 inch drop, method A or C.	AASHTO T-99
Nuclear method for the determination of percent compaction in place density and moisture content of soils and aggregates.	WAQTC TM7

7.4 Placing

Prior to placing base rock, the excavated subgrade will be graded smooth and compacted to the satisfaction of the Engineer. Geotextile fabric shall then be placed upon the full width of the compacted subgrade. The geotextile fabric shall be as specified in Specification ES-6 SUBGRADE SEPARATION GEOTEXTILES. Joints between sections of fabric shall overlap a minimum of 2 feet along longitudinal joints and a minimum of 6 feet at end joints.

If the required compacted depth of the base course exceeds 8.0 inches, the base shall be constructed in two or more layers of approximate equal thickness.

7.5 Mixing

Unless otherwise specified, the Contractor shall mix the base course by any one or a combination of the three methods specified below:

Stationary Plant Method. The aggregate and water shall be mixed in an approved mixer. Water shall be added during the mixing operation in an amount necessary to facilitate compaction. After mixing, the base material shall be placed on the roadbed by means of an approved aggregate spreader.

Travel Plant Method. After the material for each layer of base course has been placed through an aggregate spreader or windrow sizing device, the base shall be uniformly mixed by a traveling mixing plant. During the mixing, water shall be added in an amount necessary to facilitate compacting.

Road Mix Method. After material for each layer of base course has been placed, the materials shall be mixed by motor graders or other approved equipment until the mixture is uniform throughout. During the mixing, water shall be added in an amount necessary to facilitate compaction.

7.6 Shaping and Compaction

After each layer has been spread it shall be compacted for its full width. The choice of compaction equipment will be left to the Contractor. Compaction shall continue until not less than 95% of the standard density is attained as determined by AASHTO T-99.

At the request of the Contractor, the Engineer, or his/her representative, will set one set of stakes at fifty (50) foot intervals and at closer intervals where necessary.

All soft, spongy, or yielding spots, which may be ordered repaired by the Engineer, shall be repaired in accordance with Specification ES-8 SOFT SPOT REPAIR.

7.7 Payment

Measurement and Payment shall be made in accordance with the ISPWC 2020 Edition

~~The accepted quantities of by the unit price per ton. The unit price per ton shall d other costs incidental to furnishing and placing the own on the plans.~~

~~Weight slips, in duplicate form, shall accompany each load of crushed rock to the construction site. Upon delivery of the material, one copy of the weight slip will be given to the Engineer, or his/her representative, and one copy will remain with the truck driver, before the material is unloaded. Under no conditions will any weight slips be accepted by the Engineer, or his/her representative, after the material is unloaded from the vehicle. It shall be the responsibility of the Contractor to give the Engineer ample advance notice of the time when such material shall arrive at the job site, in order to assure the presence of the Engineer, or his/her representative, at the job site during delivery of the material. The weight slips will be the only basis of determination of pay quantity for this item.~~

ES-8. SOFT SPOT REPAIR

8.1 Materials

Geotextile shall be Type II, nonwoven or woven as per Specification ES-6 SUBGRADE SEPARATION GEOTEXTILES. Crushed Rock Base shall be 1-1/4"(-) crushed basalt per Specification ES-7 CRUSHED ROCK BASE.

8.2 Construction Requirements

All soft spots in the subgrade shall be called to the attention of the Inspector prior to placing the geotextile fabric. The Inspector shall determine where additional excavation is necessary and instruct the Contractor on such over excavation.

All soft, spongy, pumping or yielding areas will be ordered by Engineer to be repaired as herein described:

1. Remove subgrade to a depth of one foot below design subgrade elevation.
2. Add Subgrade Separation Geotextile to the bottom of the excavated area. This layer of geotextile will be in addition to that required for the entire subgrade area.
3. Backfill the area with Crushed Rock Base (95% min. compaction) to subgrade design elevation.

Dispose of the excavated material per Specification ES-4 REMOVALS AND DISPOSALS.

The Contractor shall cooperate with the City in determining the areas that require Soft Spot Repair by furnishing a loaded dump truck and operator to roll over the entire subgrade area and, with the assistance of a City representative, locate and mark all soft spots.

8.3 Payment

Measurement and Payment shall be made in accordance with the ISPWC 2020 Edition

~~SOFT SPOT REPAIR per square yard, complete, in-place; in otextile.~~

~~The Engineer may determine that excavation in excess of the one foot depth may be required to accomplish the repair; in such instances compensation will be adjusted proportionately.~~

ES-9. WATERING

Bulk water furnished to contractors for the construction of City funded projects will be provided at NO cost to the contractor. Bulk water furnished to contractors for purposes other than the construction of City funded projects must be purchased from the City. All bulk water use by

contractors will be metered and paid for under rates and fees established by the City's most current adopted fee schedule and pursuant to City Code.

ALL BULK WATER WILL BE FURNISHED IN ACCORDANCE WITH THE CITY OF MOSCOW'S 'BULK WATER USE POLICY'.

Contractors shall coordinate ALL water usage with the Moscow Water Department.

ES-10. WEIGHING

Weighing equipment for the weighing of crushed stone surfacing materials, bituminous construction, etc., shall consist of and conform to Section 109, of the latest edition, of the Idaho Transportation Departments Standard Specifications for Highway Construction, and amendments thereto. In any event, the scales shall be tested and sealed, at the expense of the Contractor, as set forth in the Standard Specifications listed above. Weight slips in duplicate form shall accompany each load of crushed rock or asphalt to the construction site.

ES-11. CONCRETE

11.1 General

Portland cement concrete shall conform to Section 502 of the latest edition of the Idaho Transportation Department Standard Specifications for Highway Construction, and amendments thereto, and as follows:

Portland cement concrete shall be composed of Portland cement, fine aggregate, coarse aggregate and water, proportioned and mixed in accordance with these specifications. Unless otherwise provided, the Portland cement concrete shall be Idaho Transportation Department Class 40B having a minimum unit compressive strength at 28 days age of 4,000 psi. Class 40B concrete shall have 6 sacks of cement per cubic yard of concrete and an air entrainment content of 6.5 percent, plus or minus 1.5 percent. The slump shall be a maximum of five (5) inches and shall not vary more than one (1) inch from the average.

Class 4,000 concrete shall be used for curb and gutter, sidewalk, and pedestrian ramps. Type III Portland Cement shall be used in concrete placed for all driveways, approaches, and curb and gutter unless otherwise approved by the Engineer.

11.2 Portland Cement

Portland cement shall conform to AASHTO M-85, Type I or II and shall contain no more than 0.60 percent total alkali. Type III can be used with prior approval of the Engineer.

Unless otherwise permitted, the product of only one mill or any one brand and type of Portland cement shall be used on any single pour.

11.3 Aggregates

Aggregates shall be reasonably free from wood, roots, bark, soft or disintegrated pieces, or other deleterious matter. Blend sand may be approved for use to correct deficiencies in the grading

sizes, provided the combination meets the specification requirements for the class of material being produced.

Fine aggregate for concrete shall conform to the following gradation:

Sieve Size	Percent Passing
3/8 inch	100
No. 4	95 – 100
No. 16	45 – 80
No. 50	10 – 30
No. 100	2 – 10
No. 200	0 – 4

Sand equivalent shall be a minimum of 70.
Fineness modulus to be between 2.50 and 3.10 (AASHTO M-6).

The amount of deleterious substances shall not exceed the following limits:

	Percent by Weight Maximum
Clay lumps	1.0
Coal & lignite	1.0
Material to be reasonably free of shale, alkali, mica, coated grains, & soft flaky particles.	

Organic impurities shall not exceed those specified in AASHTO T-21. Mortar making properties shall conform to AASHTO T-71 or ASTM C87.

Coarse aggregate for concrete shall conform to the following gradations for coarse aggregate size No. 3:

Sieve Size	Percent Passing
1 1/2 inch	100
1 inch	95 – 100
1/2 inch	25 – 60
No. 4	0 – 10
No. 8	0 – 5

The amount of deleterious substances shall not exceed the following limits:

	Percent by Weight (Maximum)
Coal & lignite	1.0
Clay lumps	0.5

Material to be reasonably free of
shale, alkali, mica, coated grains, &
soft flaky particles.

11.4 Water

Water for concrete shall be obtained from any source of potable water. Sources of non-potable water shall be approved before use.

11.5 Curing Compound

The curing compound shall be a liquid membrane-forming curing compound conforming to AASHTO M-148 Type I, with a fugitive dye and shall be applied to all finished concrete surfaces immediately after the concrete has set.

11.6 Air Entraining Admixture

Air entraining admixture shall conform to AASHTO M-154.

ES-12. CONCRETE CONSTRUCTION REQUIREMENTS

12.1 Mixing and Delivery

A. Concrete shall be mixed and delivered by means of any of the following:
   1. Mixed complete in a stationary mixer and the mixed concrete transported to the point of delivery in agitating equipment or in non-agitating equipment when approved. (Known as central-mixed concrete.)

   2. Mixed completely in a truck mixer at the batching plant or while in transit. (Known as transit mixed concrete.)

   3. Mixed completely in a truck mixer at the point of delivery following the addition of mixing water. (Known as truck mixed concrete.)

   4. Mix partially in a stationary mixer and the mixing completed in a truck mixer. (Known as shrink-mixed concrete.)

B. Truck mixers and truck agitators shall be operated within the rated capacity and at a speed of rotation for mixing or agitating as designated by the manufacturer of the equipment.

C. When a stationary mixer is used for the complete mixing of the concrete, the mixing time for mixers having a capacity of 10 cubic yards or less shall be 60 seconds minimum. For 10 or more yards capacity, the mixing time shall be approved. Mixing time shall be

measured from the time all cement and aggregates are in the drum. The batch shall be so charged into the mixer that some water will enter in advance of cement and aggregates and all water shall be in the drum by the end of the first one-fourth (1/4) of the specified mixing time.

D. For shrink-mixed concrete, the mixing time in the stationary mixer may be reduced to a minimum of 30 seconds. Mixing shall be completed in a truck mixer by not less than 50 or more than 100 revolutions of the drum or blades at mixing speed. The batch volume shall not exceed 70 percent of the gross volume of the drum.

E. When a truck mixer is used for complete mixing each batch of concrete shall be mixed for not less than 70 nor more than 100 revolutions of the drum or blades at mixing speed. Additional mixing, if any, shall be at agitating speed.

F. When a truck mixer or agitator is used for transporting concrete that has been completely mixed in a stationary mixer, mixing during transport shall be at the agitating speed.

G. Unless otherwise approved, when a truck mixer or agitator is used for transporting concrete, the concrete shall be delivered to the site of the work and discharged completely within 1-1/2 hours or before the drum has been revolved 300 revolutions, whichever comes first, after the introduction of the cement to the aggregates. In hot weather or under conditions contributing to quick stiffening of the concrete, a time less than 1-1/2 hours may be directed. When a truck mixer is used for the complete mixing of the concrete, the mixing operation shall begin within 30 minutes after the cement has been intermingled with the aggregates. If additional mixing water is required to replace evaporated mixing water to maintain the specified slump and is added with the permission of the Engineer, a minimum of 20 revolutions of the truck mixer drum at mixing speed shall be required before discharge of any concrete.

Tests for consistency may be made at approximately the beginning, the midpoint, and the end of the load. If the results vary by more than the tolerance specified below, the mixer or agitator shall not be used until the condition is corrected.

When Average Slump is	Tolerance
3 inches or less	1/2 inch
More than 3 inches	1 inch

H. Central mixing concrete may be transported in suitable non-agitating equipment. The bodies of such equipment shall be smooth, watertight metal containers.

12.2 Re-tempering

Concrete shall be mixed only in such quantities as are required for immediate use and shall be used while fresh before initial set has taken place. Any concrete having initial set before placing and finishing shall be wasted and not used for the work. No re-tempering of concrete (remixing with water or other materials) will be allowed, unless otherwise approved by the Engineer, and in

no instance shall concrete be re-tempered at a rate in excess of 1 gallon of water per 1 cubic yard of concrete remaining in the truck.

12.3 Placing Concrete

General. Concrete shall not be placed until forms have been checked and approved by the Engineer. The forms shall be clean of all debris before concrete is placed. Concrete shall be placed so as to avoid segregation of the materials and the displacement of the reinforcement. Care shall be taken to fill each part of the form by depositing the concrete as near the final position as possible. After initial set of the concrete, the forms shall not be jarred and no strain shall be placed on the ends of projecting reinforcement.

12.4 Cold Weather Concreting

Heating and Placing Concrete. Before any concrete is placed, all snow and frost shall be completely removed. Concreting operations shall meet the following requirements when the ambient temperature falls below 40 degrees F.

To achieve adequate curing, the temperature of the concrete shall be maintained above 50°F during the entire curing period or 7 days, whichever is greater. The concrete temperature shall not be allowed to fall below 35°F during this time. Prior to placing concrete in cold weather, the Contractor shall provide a written procedure for cold weather concreting to the Engineer. The procedure shall detail how the Contractor will adequately cure the concrete and prevent the concrete temperature from falling below 35°F. Extra protection shall be provided for areas especially vulnerable to freezing (such as exposed top surfaces, corners and edges, thin sections, and concrete placed into steel forms). Concrete placement will only be allowed if the Contractor's cold weather protection plan has been approved by the Engineer.

The Contractor shall furnish concrete that will have a temperature of at least 50 degrees F and not more than 80 degrees F at the time of placing. Heating equipment shall heat all the materials uniformly. Such heating shall prevent the occurrence of non-uniform moisture contents or contamination in the aggregates. Aggregates shall be heated in a manner such that frozen lumps, ice and snow are eliminated. The average temperature of an individual batch of aggregate shall not exceed 150 degrees F.

The Contractor is solely responsible for protecting concrete from inclement weather during the entire curing period. Permission given by the Engineer to place concrete during cold weather will in no way ensure acceptance of the Work by the Contracting Agency. Should the concrete placed under such conditions prove unsatisfactory in any way, the Engineer shall still have the right to reject the Work although the plan and the Work were carried out with the Engineer's permission.

12.5 Placing in Hot Weather

The temperature of the concrete shall not exceed 80 degrees F at the time of placement. When the combination of ambient air temperature, concrete temperature, humidity and wind is such that rapid evaporation of moisture from the concrete surface will take place, the Contractor shall

take measures to slow the evaporation to tolerable limits. Such measures may include, but not limited to, erecting sun shades or placing at night or early morning. Ice may be used as a part of the mixing water providing it has completely melted by the time mixing is completed.

12.6 Finishing Concrete

If, in the judgment of the Engineer, rock pockets are of such extent or character as to materially affect the strength of the structure or to endanger the life of the steel reinforcement, he may declare the concrete defective and require the removal and replacement of that portion of the structure affected. All holes and depressions shall be cleaned, thoroughly wetted, and filled with cement mortar composed of one part of cement to two parts of sand. All fins caused by form joints and other projections shall be removed above ground line. The resulting surfaces shall be reasonably smooth and uniform in texture and color. After the concrete is placed, it shall be struck off with a template or a vibrating screen. Concrete shall be finished to an even surface by means of both longitudinal and transverse floats. The use of power trowels will not be permitted.

When concrete sidewalk has hardened sufficiently the surface shall be given a broom finish. The broom shall be of an approved type. The stroke shall be perpendicular to the centerline with adjacent strokes, slightly overlapped. The finish shall be free from porous spots, irregularities, depressions, small pockets or rough spots.

12.7 Curing Concrete

Concrete surfaces shall be kept completely and continuously moist until a curing method is applied. Curing compound shall not be applied to concrete surfaces before the finishing has been acceptably completed and shall not be applied to construction joints or to the inside faces of joints to be sealed with silicone joint sealer. The curing compound shall not be applied during rainfall.

Prior to completion of the curing period, if any membrane surface is marred or damaged by scuffing and wear, the Engineer may require an immediate application of the same type membrane or water cure for the remainder of the cure period.

Membrane forming curing compounds shall be thoroughly mixed before use and agitated during application to prevent settling of the suspended solids. The membrane must be uniformly applied.

Membrane forming curing compounds shall be applied to the finished concrete immediately after the bleed water or free-water sheen leaves the surface of the finished concrete surface.

The curing compound shall be a liquid membrane curing compound conforming to AASHTO M-148 Type I. Curing compound shall be applied under pressure, at the rate of application as directed, and shall be at least 1 gallon per 200 square feet for each application. All concrete cured by this method shall receive two applications of the curing compound for a total minimum coverage of 1 gallon per 100 square feet. The first coat shall be applied immediately after stripping the forms and/or acceptance of the concrete finish. If the surface under the forms has

dried the concrete shall be thoroughly wet with water and the curing compound applied just as the surface film of water disappears. The second application shall be applied after the first application has set. During curing operations all unsprayed exposed surfaces shall be kept wet with water.

Should the film become damaged from any cause, within 10 days, the damaged portion shall be repaired immediately with additional compound.

If this curing compound is applied to construction joints, it shall be removed by sandblasting before fresh concrete is placed against them.

All membrane forming curing compounds shall be accompanied by a Manufacturer's Certificate of Compliance and shall be approved by the Engineer, prior to its use.

12.8 Correction of Work After Completion of Construction – Two Year Warranty

The contractor/person installing the concrete shall be responsible for faulty and/or non-conforming materials or workmanship for a period of two (2) years from the date of the initial installation; he/she shall remedy any defects due thereto. The City shall give notice of observed defects with reasonable promptness.

Surface scaling (or spalling) of the new concrete surface will be the fundamental consideration for determining non-conforming workmanship and materials requiring remediation. Scaled surfaces exceeding 5% (randomly dispersed or concentrated) per twenty (20) square feet of concrete surfacing area will be considered defective and shall be replaced. Manner and method as well as configuration of the area requiring replacement will be as directed and approved by the City Engineer. All replacement of concrete shall be as per City standards and at the Contractor's expense.

ES-13. CONCRETE CURB

13.1 General

All concrete curb shall conform to the City of Moscow Standard Drawings, the Plans, and Specifications. Concrete for curbs shall conform to the requirements of ES-11 CONCRETE and ES-12 CONCRETE CONSTRUCTION REQUIREMENTS of these specifications.

13.2 Forms

Curb forms shall be set to line and grade as designated; securely staked, and so constructed as to result in finished lines true to the dimensions and shapes shown on the plans.

Forms shall be of wood or metal, straight and free from warp, and of sufficient strength to resist springing while placing concrete. Where a section must be constructed on a curve, straight lengths of the section shall be short enough that the middle ordinate to the curve, from the face of that section, does not exceed one-half (1/2) inch or the section shall be continuously curved.

13.3 Joints

Expansion joints (or thru joints) shall be provided at intervals of forty-eight (48) feet throughout the length of the curb and at the junction of straight curb and radii and at either end of a driveway or alley section. Pre-formed joint fillers of one-half (1/2) inch or three-eighths (3/8) inch thickness will be placed in expansion joints.

every 8-feet, or match adjacent sidewalk.

Contraction joints (or "Dummy Joints") shall be constructed every ~~sixteen (16) feet.~~ These joints shall be 1/8 inch minimum thickness and constructed to a minimum depth of 1-1/2 inches by scoring with a tool which will leave the corners rounded and destroy aggregate interlock.

13.4 Construction Requirements

A. Dimensions. All curbs, unless otherwise specified, shall be in accordance with dimensions conforming to one of the types shown on City of Moscow Standard Drawings as specified by the approved project plans.

B. Consistency. All Class A curb (cast in place) shall be of good plastic consistency and shall have a slump of three (3) inches and shall be tested by the Engineer according to the provisions of AASHTO T-119.

All Class C curb (extruded) shall meet the requirements for Class A curb, except for the amount of slump which may vary according to the conditions of the concrete mix and the extrusion equipment used. Under no circumstances however, shall the finished curb vary more than one-half (1/2) inch from the design elevation, and not more than ten (10) percent from the dimensions shown in the City of Moscow Standard Drawings and Specifications. Class C curbs will not require expansion joints.

13.5 Finishing

While the concrete is still green, the top and front face, or other exposed portions of the curb, shall be troweled to produce a uniform even surface then given a fine brush finish with brush strokes parallel to the long axis of the curb. Form marks and other irregularities shall be removed. The edges of the curb shall be rounded with an edger. Honeycombed areas in the back of the curb, that in the opinion of the Engineer are not detrimental to the curb, need not be patched.

13.6 Curing

Immediately after finishing, the concrete shall be cured in accordance with the requirements of ES-12.7, Curing Concrete.

13.7 Backfilling

All curb shall be backfilled as described herein. If sidewalk or concrete pavers are to be constructed behind the curb, all backfill material shall be 3/4" minus crushed aggregate. If the area behind the curb is to be lawn or planted area, the top 16 inches shall be topsoil. All denuded areas shall be fertilized, resown with grass seed and covered with mulch as specified in Sections ES-27 and ES-28.

13.8 Payment

Measurement and Payment shall be made in accordance with the ISPWC 2020 Edition

~~The accepted quantities of [illegible] linear foot. Compacted aggregate base under the [illegible] locations will be considered incidental to the unit price for the curb. The unit price per linear foot shall include all materials, labor, equipment and other costs incidental to constructing concrete curb as herein specified and as shown on the Plans and special drawings.~~

ES-14. CONCRETE SIDEWALK

14.1 General

All concrete sidewalk, including driveways, shall conform to the City of Moscow Standard Drawings, Contract Plans, and Specifications. Concrete for sidewalks shall conform to the requirements of ES-11 CONCRETE and ES-12 CONCRETE CONSTRUCTION REQUIREMENTS of these specifications.

Gravel base shall be per ES-7

14.2 Gravel Base

Sidewalk shall be constructed on a compacted base of (3/4) inch minus crushed rock; base aggregate shall be placed on compacted, non-pumping subgrade. The crushed rock shall have the following gradation:

Sieve Size	Percent Passing
1 inch	100
3/4 inch	90 – 100
No. 4	40 – 65
No. 8	30 – 50
No. 200	3 – 9

The sand equivalent shall not be less than 30 if 5 percent or more of the material passes the No. 200 sieve. Sand equivalent will not be required if less than 5 percent passes the No. 200 sieve.

The total thickness of the gravel base shall be at least six (6) inches, compacted, in-place.

The gravel base shall be graded, rolled, tamped, or otherwise compacted to ninety-five (95) percent of the maximum density determined in accordance with AASHTO T-99.

The gravel base shall be thoroughly sprinkled with water before the concrete is placed.

All cost for furnishing and placing gravel base for sidewalks shall be included in the unit price bid on the bid proposal form for constructing concrete sidewalks. No additional compensation will be made for this gravel base.

14.3 Construction requirements

A. Dimensions. Sidewalk width, thickness, and reinforcement shall be as shown on the City of Moscow Standard Drawings.

Sidewalk shall have a cross slope of between 1% and 2%, unless otherwise approved by the Engineer.

B. Forms. Side forms shall be rigid and shall bear full length on the compacted gravel base and shall be the full depth of the finished walk. Forms shall be well staked, braced or otherwise rigidly held to true line and grade and shall rest upon stakes driven into the ground at intervals sufficient to provide rigid support. If metal forms are used they shall be of a type satisfactory to the Engineer.

C. Placing and Finishing Concrete. SLUMP SHALL NOT EXCEED FIVE (5) INCHES. The concrete shall be spread uniformly between the forms and thoroughly consolidated and leveled with an approved strikeboard. Expansion joints of premolded joint material one-half (1/2) inch thick or three-eighths (3/8) inch thick may be constructed through the sidewalk at intervals of twenty (20) feet. Expansion joints may also be located where new sidewalk meets existing concrete, unless otherwise approved by the Engineer. Where applicable, joints in sidewalks and curb shall coincide.

After the concrete has been thoroughly consolidated and leveled it shall be bullfloated to eliminate high and low spots and to embed large aggregate. The concrete shall then be allowed to harden properly before jointing, edging, and brooming is completed.

Contraction joints shall be tooled into the concrete every four feet for four foot wide sidewalk and five feet for five foot wide sidewalk, shall be 3/8 inch minimum in depth, and shall be perpendicular to the direction of the walk. All joints shall then be edged with a 3/8 inch radius edger and the sidewalk edges shall be tooled with a one-half (1/2) inch radius edger.

After edging and jointing has been completed the concrete shall be smoothed with wood or metal hand floats. The floated surface shall then be coarse broomed uniformly in a transverse direction with a fiber hair brush or an approved type.

The placing and furnishing of all sidewalk shall be performed under the control of the Engineer, or his/her representative, and the tools shall meet with his/her approval.

The contractor shall keep a person at the job site for a minimum of four hours following the concrete surface brooming operation for the purpose of both preventing and repairing any damaged surfacing to the newly placed concrete. Concrete left unattended, if damaged or defaced shall be replaced at contractor expense.

D. Curing. Curing shall be performed by applying a sealing compound conforming to AASHO M-148 Type I to the surface of the concrete immediately after it has set sufficiently to permit such application. Curing shall conform to Section ES-12.7, Curing Concrete.

E. Backfill. After removal of the forms, the area behind the sidewalks shall be backfilled and compacted with at least sixteen (16) inches of topsoil level with the sidewalk and curb. Less than 16 inches of topsoil may be approved where new sidewalk is being constructed along older streets. The topsoil shall be raked or otherwise leveled, taking care to break up large dirt clods and remove large stones. All denuded areas shall be fertilized, resown with grass seed and covered with mulch as specified in Sections ES-27, ES-28.

14.4 Payment

Measurement and Payment shall be made in accordance with the ISPWC 2020 Edition

~~The accepted quantities of unit price per square yard. The unit price per square yard shall include all materials, labor, equipment, and other costs incidental to construction of concrete sidewalk, including aggregate base, as herein specified and as shown on the Plans and special drawings.~~

ES-15. SUPERPAVE HOT MIX ASPHALT

15.1 Hot Mix Asphalt

The Hot Mix Asphalt (HMA) pavement shall be placed in lifts to the thickness as specified on the Contract Plans and as required by the Standard Construction Drawings.

PAVEMENT THICKNESS SPECIFIED BY CITY OF MOSCOW DOCUMENTS (STANDARD DRAWINGS, STANDARD SPECIFICATIONS ETC.) SHALL MEAN THE FULLY COMPACTED, IN-PLACE DEPTH.

The materials of which the asphaltic concrete is composed shall be of such sizes and grading that, when proportioned and mixed together, they will produce a uniformly graded mixture, which when tested by means of laboratory screens, will conform to the requirements in the following table. The percentages of refer to the completed HMA mixture. All percentages shall be computed on the basis of weight. Screens and sieves used for determining the percentages of the different sizes of aggregate shall have square openings.

3/4” Superpave HMA Pavement CL SP-2 (Base Course)

Sieve Size	Percent Passing
1 inch	100
3/4 inch	90 – 100
1/2 inch	90 max
3/8 inch	52 – 80
No. 8	23 – 49
No. 200	2.0 – 8.0

1/2” Superpave HMA Pavement CL SP-2 (Surface Course)

Sieve Size	Percent Passing
3/4 inch	100
1/2 inch	90 – 100
3/8 inch	90 max
No. 8	28 – 58
No. 200	2.0 – 10.0

Superpave hot mix asphalt paving shall conform to the requirements, of the latest edition, of the Idaho Standards for Public Works Construction and amendments thereto. A copy of said specifications is available at the office of the City Engineer. Paving asphaltic cement used will be PG58-22 or PG58-28, or an approved equal, and shall conform to the specifications, of the latest edition, of the Washington State Department of Transportation Standard Specifications for Road, Bridge, and Municipal Construction and amendments thereto.

Section 405, of the latest edition, of the Idaho Transportation Department Standard Specifications for Highway Construction and amendments thereto, shall apply as to the items of "Weather Limitations, Hauling Equipment, Pavers, Rollers, Mixing Plant, Spreading and Finishing, Joints, Rolling, Surface Smoothness."

A Hveem or Super Pave Mix Design shall be submitted with associated “Job Mix Formula” (JMF) for approval, if required by the City Engineer.

15.2 Rolling and Compaction

Rolling and compaction of the asphaltic concrete mat shall be done in accordance, with the latest edition, of the Idaho Transportation Department Standard Specifications for Highway Construction and amendments thereto.

Compaction shall be achieved, as per Section 810, of the latest edition of the Idaho Standards for Public Works Construction and amendments thereto. A copy of said specifications is available at the office of the City Engineer.

The cost of the rolling and compaction shall be included in the price of furnishing and placing superpave hot mix asphalt pavement.

15.3 Tack Coat

Tack coat shall be applied at all edges where the new asphaltic surface joins the existing pavement and shall be applied in accordance with Section 401, of the latest edition, of the Idaho Transportation Department Standard Specifications for Highway Construction and amendments thereto.

15.4 Payment

Measurement and Payment shall be made in accordance with the ISPWC 2020 Edition

~~The accepted quantities of [illegible] be paid for by the unit price per ton or per square yard. The unit price shall include all materials, labor, equipment, and other costs incidental to furnishing and placing the superpave hot mix asphalt pavement herein specified and as shown on the plans.~~

~~Weight slips in duplicate form shall accompany each load of superpave hot mix asphalt pavement to the construction site. Upon delivery of the material, one copy of the weight slip will be given to the Engineer, or his/her representative, and one copy will remain with the truck driver before the material is unloaded. Under no conditions will any weight slips be accepted by the Engineer, or his/her representative, after the material is unloaded from the vehicle. It shall be the responsibility of the Contractor to give the Engineer ample advance notice of the time when such material shall arrive on the job site in order to assure the presence of the Engineer, or his/her representative, at the job site during delivery of the material. The weight slips will be the only basis of determination of pay quantity for this item.~~

ES-16 CEMENT CONCRETE PAVEMENT

16.1 General

Portland cement concrete shall conform to Section ES-11 CONCRETE, of these Specifications except as modified by the following sections and subsections.

16.2 Aggregates

Aggregates shall possess such characteristics of shape and size that concrete, prepared from a mixture of fine and coarse material in the proportions specified, will be of satisfactory workability in the opinion of the Engineer. Regardless of compliance with all other provisions of these specifications, if the concrete is not of a workable character or when finished does not exhibit a proper surface, either the fine or the coarse aggregate or both shall be rejected or altered as required by the Engineer.

A. Fine aggregate shall consist of sand or other inert materials, or combinations thereof approved by the Engineer, having hard, strong, durable particles free from adherent

coating. Fine aggregate shall be thoroughly washed to remove clay, loam, alkali, organic matter or other deleterious matter.

Fine aggregate with more than the maximum percentage passing any sieve may be accepted provided the mix proportions are adjusted to produce concrete having the same net water-cement ratio, slump and workability. Any resulting increase in the cement content shall be at the expense of the Contractor. Under no circumstances shall the fine aggregate, which has a grading finer than that permitted under Section 703, of the latest edition, of the Idaho Transportation Department Standard Specifications for Highway Construction, and amendments thereto, be used in paving concrete.

Fine aggregate shall develop in the mortar strength test, at an age of 7 days, a compressive strength of not less than ninety (90) percent of the strength of a mortar prepared with the same cement (AASHTO T-71 or ASTM C-87) .

B. Coarse aggregate shall consist of gravel, crushed stone or other inert material or combinations, thereof approved by the Engineer, having hard, strong, durable pieces free from adherent coatings. Coarse aggregate shall be thoroughly washed to remove clay, loam, bark, sticks, alkali, organic matter, or other deleterious material.

Coarse aggregate containing more than the maximum percentage passing any screen may be accepted provided the mix proportions are adjusted to produce concrete having the same net water-cement ratio, slump and workability. Any resulting increase in the cement content shall be at the expense of the Contractor.

Coarse aggregate shall not be used, under any circumstances in paving concrete, when the amount by weight passing the screens exceeds the following:

3/4" square opening.....70%
3/8" square opening.....30%

C. Properties of concrete aggregate shall be determined in accordance with the following methods of test:

1. Amount of Material Finer than No. 200 Sieve in Aggregates: ASTM Designation C-117.
2. Organic Impurities: AASHTO T-113.
3. Flexural Strength of Concrete: AASHTO T-104.
4. Percentage of Particles of Less than 1.95 Specific Gravity: AASHTO T-150.
5. Clay Lumps in Aggregates: AASHTO T-112.
6. Abrasion of Coarse Aggregate by Use of the Los Angeles Machine; AASHTO T-96.

16.3 Curing and Protection

A. Curing and protection shall conform to the specifications of Section 703, of the latest edition, of the Idaho Standards for Public Works Construction and amendments thereto. A copy of said specifications is available at the office of the City Engineer.

16.4 Joint Fillers and Sealants

A. Joint fillers and sealants shall conform to the specifications of Section 705, of the latest edition, of the Idaho Standards for Public Works Construction and amendments thereto. A copy of said specifications is available at the office of the City Engineer.

16.5 Air-Entrained Concrete

Air-entrained concrete shall be used, as per ES-11, unless otherwise provided for in the Special Provisions. Either air-entrained Portland cement or an air-entraining admixture shall be added at the mixer.

The volume of air in freshly mixed concrete shall conform to that specified in the table which follows:

AIR CONTENT OF FRESHLY MIXED CONCRETE

Maximum Size of Coarse Aggregate (Inches)	Air Content (Percent by Volume)
1-1/2, 2, and 3	5 ± 1
3/4 and 1	6 ± 1
3/8 and 1/2	7-1/2 ± 1

If the measured air content is found above or below the values contained in the table, the Contractor shall immediately make changes in mixing or materials as will be necessary to comply with the requirements for air content.

If an air-entraining agent is used, it shall be introduced at the nominal rate of one fluid ounce per sack of cement, but the rate shall be varied if necessary to comply with the requirements for air content.

An automatic dispenser accurate to 10%, which will introduce into the mixing water the specified amount of air-entraining agent for each cycle of mixing, shall be connected to the mixer.

Aggregates shall be adjusted to compensate for increased yield resulting from air-entrainment so that the specified amount of cement is contained in each cubic yard of concrete. Adjustment shall be made by decreasing the weight of fine aggregates only, unless otherwise directed by the Engineer.

Other Admixtures: Calcium chloride or any other admixture for any purpose other than air-entrainment may be added only upon the approval of the Engineer and under his/her supervision.

16.6 Reinforcing Steel

Reinforcing steel shall consist of round or square deformed bars or wire mesh. Square twisted bars shall not be used.

A. Deformed steel bars for concrete reinforcement sizes No. 3 through 11 shall conform to the requirements of ASTM A-615M, Billet Steel Bars for Concrete Reinforcement, Grade 60, except as noted on the plans and except that the bars shall be made only by the open-hearth process or the electric furnace process.

   The form of the deformed bars shall conform to ASTM A-706M, Minimum Requirements for Deformations of Deformed Steel Bars for Concrete Reinforcement.

   Deformed bars size No. 14 and size No. 18 for concrete reinforcement shall conform to the requirements of ASTM A-615M, Special Large Size Deformed Billet Steel Bars for Concrete Reinforcement Intermediate Grade.

B. Wire mesh for concrete reinforcement shall conform to the requirements of the standard specifications of AASHTO M-55, Welded Steel Wire Fabric for Concrete Reinforcement. All wire mesh shall be of an approved kind and quality of manufacture.

C. Tie bars shall be free from rust, loose mill scale, dirt, grease or other defects affecting the strength or bond with the concrete.

16.7 Measurement of Materials

The fine aggregate and each size of coarse aggregate shall be measured by weighing. Corrections shall be made for variations in weight of material due to moisture content and specific gravity. The quantities of aggregates used in each batch shall be such that the cement can be measured in full sacks unless it is weighted in bulk.

Fine and coarse aggregate shall be proportioned by weight, except that if the project is small, then volumetric proportioning may be used with permission of the Engineer. In proportioning, the unit of measure for cement will be by the sack, ninety-four (94) pounds.

Weights of fine and coarse aggregate are based on a bulk specific gravity, saturated surface dry, of 2.67. When volume measurements are used, one cubic foot of sand shall be taken as equivalent to 100 pounds of sand and one cubic foot of gravel shall be taken as equivalent to 105 pounds of gravel. Corrections must be made for contained moisture in the aggregates and variations in specific gravity.

Concrete mixes shall be proportioned to the satisfaction of the Engineer. The proportion of aggregate may be altered to give better workability only upon written approval of the Engineer.

16.8 Re-tempering

Concrete shall be mixed only in such quantities as are required for immediate use and shall be used while fresh before initial set has taken place. Any concrete having initial set before placing and finishing shall be wasted and not used for the work. No re-tempering of concrete (remixing with water or other materials) will be allowed.

16.9 Construction of Portland Cement Concrete Pavement

Construction of Portland cement concrete pavement shall conform to the requirements of Section 705, of the latest edition, of the Idaho Standards for Public Works Construction and amendments thereto. A copy of said specifications is available at the office of the City Engineer. Concrete pavement batches shall meet the requirements of Section 703, of these Standard Specifications.

Concrete batch proportions shall be approved by the Engineer and any subsequent changes to the approved batch must be made in writing by the Engineer.

16.10 Payment

Measurement and Payment shall be made in accordance with the ISPWC 2020 Edition

The accepted quantities of be paid for by the unit price per square yard. The unit price per square yard shall include all materials, labor, equipment and other costs incidental to furnishing and placing the Portland cement concrete pavement herein specified and as shown on the plans.

Batch slips in triplicate form shall accompany each load of concrete for pavement delivered to the construction site. Upon delivery of the material, one copy of the batch slips will be given to the Engineer, or his/her representative, and one to the Contractor. Delivery of concrete shall mean discharged from the mixer truck and all water added to the mix shall be added to the batch slip. It shall be the responsibility of the Contractor to give the Engineer ample advance notice of the time when such material shall arrive at the job site in order to assure the presence of the Engineer, or his/her representative, at the job site during material delivery. The batch slips may be used for the determination of cross section conformity.

1. All catch basins shall be separated from the pavement and curb by boxing out around basin. Expansion joint material shall extend completely through curb and slab. Manhole castings within the pavement limits shall be boxed in like manner except when telescoping type castings are used.

2. When a joint falls within 5 feet of, or contacts, basins, manholes or other structures, shorten one or more panels either side of opening to permit joint to fall on round structures and at or between corners of rectangular structures.

3. All transverse joints must extend through curbs and must be continuous across pavement, except tied transverse construction joints. Expansion joints will not be required except at structures or as shown on the plans.

4. Transverse sawed joints to be a + 15' o.c. as shown on drawings. Joints at 60' to be sawed the same day as placement. Intermittent joints at 15' to be sawed next day after placement. Longitudinal joints shall be sawed prior to permitting traffic on the pavement.

ES-17. ADJUSTMENT OF GATE VALVE BOXES, MONUMENTS, CATCH BASINS, CATCH INLETS, AND MANHOLES

Gate valve boxes, catch basins, catch inlets, monument casings, and manholes shall be adjusted to the grade, as established by the Engineer. Valve boxes, casings, rings and covers shall be reset in a careful and workmanlike manner to conform to the new grade. Special care shall be exercised in all operations in order not to damage the structures, equipment or water mains. Any damage occurring to the manholes, catch basins, gate valves, monuments, water meters or water mains, due to the contractor's operation, shall be repaired at the contractor's expense. Any masonry adjustment shall be made by using pre-cast risers, bricks, concrete blocks or poured concrete.

The Contractor shall notify the appropriate utility company, in advance, if gas valve boxes need to be adjusted, so the utility company personnel can do so, in a timely manner.

The Contractor shall notify the City Water Department, in advance, if water meter boxes need to be adjusted, so the Water Department personnel can do so, in a timely manner.

Location of valve boxes, catch basins and manholes on the plans is approximate only. They will be accurately located and referenced by the Engineer, or his/her representative, whenever possible. Manhole lids and catch basin and monument covers and valve box lids shall, preferably, be set to grade following the final application of asphaltic concrete. During paving operations, tops of manholes, monuments, catch basins and valve box lids shall be covered with building paper, diesel oil, or other suitable material to prevent sticking of asphalt to the metal lids.

Where excavation is necessary to adjust the grade of manholes, catch basins, monuments, or valve boxes, the backfill shall be carefully placed and tamped by hand.

~~Payment for adjustment of manholes, catch basins, gate valves, and monuments will be made according to the unit price for each unit adjusted:~~

Measurement and Payment shall be made in accordance with the ISPWC 2020 Edition

The unit price bid shall include all costs incurred in t
adjust the particular units to grade.

ES-18. MANHOLES AND CATCH BASINS

18.1 General

Catch basins, catch inlets, and manholes shall be precast reinforced concrete units, furnished and installed in accordance with the project plans, these Standard Specifications, and the Standard Drawings.

Completed catch basins and manholes including ring shall be capable of withstanding, with a reasonable margin of safety, a concentrated load of 20,000 pounds.

Backfill shall be placed in horizontal layers no more than 6 inches thick with each layer compacted to 95 percent of the maximum density or as approved by the Engineer.

18.2 Precast Reinforced Concrete Manholes, Catch Basins, and Catch Inlets

Precast reinforced manholes, catch basins, and catch inlets sections shall conform to AASHTO M-199, ASTM C-478 and ASTMC-433 and as shown on the Standard Construction Drawings.

A. Base Sections. Base shall be placed on a well graded dewatered granular bedding course. The bedding course shall be firmly tamped and made smooth and level to assure uniform contact and dimensions shall conform to the standard drawings. If the base is cast in place, the concrete shall conform, to the latest edition, of the Idaho Transportation Department Standard Specifications for Highway Construction Class 30 concrete. Where water is encountered at the site all cast in place bases shall be placed on a one-piece waterproof membrane so as to prevent any movement of water into the fresh concrete.

B. Joints. All lift holes and all joints between precast elements shall be first filled with an asphaltic fiber material then finished smooth with mortar. The fiber shall be Ramneck brand or approved equal.

C. Steps. Not required.

D. Workmanship and Finish. Cones and sections shall be substantially free from fractures, large and deep cracks and surface roughness. In precast sections where loops have been provided in lieu of lift holes, the loops shall be removed flush with the inside wall surface after the manhole or catch basin has been completed. No sharp cut-off protrusions will be permitted. If concrete spalling occurs as a result of loop removal, the spalled area shall be restored in workmanship manner to a uniform smooth surface with mortar.

18.3 Rings and Lids

Rings and lids shall be cast iron and shall conform to the Standard Drawings. Castings shall conform to the requirements of ASTM A-48 Class 138 and shall be free of porosity shrink cavities, cold shuts or cracks, or any surface defects which would impair serviceability.

18.4 Sanitary Sewer Manholes

A. General. Sanitary sewer manholes shall be constructed according to Plans, Standard Drawings and Specifications. All sanitary manholes shall be constructed of precast reinforced concrete sections.

Delete paragraph

~~The Contractor may constr gh the manhole by either running sewer pipe through the bottom of the manhole, pouring concrete around the pipe and breaking out the upper half of the pipe, or by pouring concrete in the bottom of the manhole and forming a channel through the manhole by hand.~~

B. ~~Basis of Payment. Sa rding to the unit price per each or per vertica~~

Measurement and Payment shall be made in accordance with the ISPWC 2020 Edition

~~The unit price bid shall include all cost incurred in furnishing materials, labor, excavation, installing the manholes in place including the asphaltic coating on the outside of the manhole and the manhole rings and lids, and backfilling.~~

C. Watertightness

1. SANITARY SEWER MANHOLES SHALL BE CONSTRUCTED WATERTIGHT. All visible leaks (infiltrating subsurface water) shall be sealed; sealing shall be accomplished by a manner and method, in the opinion of the Engineer, that constitutes permanency. Leaks that cannot be sealed by Contractor shall be sealed either by the pressure grouting method (injected chemical sealants) or the interior surface coating method, utilizing a firm specializing in such services, at the Contractor's expense. Less than four minor drips in a single manhole will be considered negligible and will not require sealing.

2. Hydrostatic Testing.

   a. All sanitary sewer manholes constructed in areas where subsurface water may, in the opinion of the Engineer, pond around them shall be hydrostatically tested in accordance with this specification.

   b. Prior to testing, the manhole shall be completely constructed and all inlet and outlet pipes shall be plugged. The Contractor shall fill the manhole to the top with water. Four hours minimum after the manhole has been filled, the Contractor shall refill the manhole to the original water level and commence the test for a minimum 2-hour period. The leakage rate shall not exceed 0.2 gallons per hour per foot of test head above the pipe invert elevation. Manholes which fail the test shall be repaired and re- . Sources of non pass.

   c. Manholes tested by the exfiltration method shall have all infiltrating water sealed prior to beginning the exfiltration test.

3. Vacuum Testing - per ISPWC 502 is allowed as an alternative to Hydrostatic Testing

18.5 Storm Sewer Manholes

A. General. Storm sewer manholes shall be constructed according to the Plans, Standard Drawings and Specifications. Storm sewer manholes shall be precast reinforced concrete, unless otherwise approved by the Engineer.

All pipe extending into catch basins shall be trimmed within 1”-2” of the inside wall surfaces and shall be neatly grouted inside and out and watertight.

B. ~~Basis of Payment. Storm sewer manholes will be paid for according to the unit price per each or per vertical foot.~~

Measurement and Payment shall be made in accordance with the ISPWC 2020 Edition

The unit price bid shall inc als, labor, excavation, installing manholes in place including the manhole rings and lids, and backfilling.

18.6 Catch Basins and Catch Inlets

A. General. Catch basins and catch inlets shall be constructed according to the Plans, Standard Drawings and specifications. Catch basins shall be precast reinforced concrete per WSDOT TYPE 1, catch inlets shall be WSDOT CONCRETE INLET - unless otherwise approved by the Engineer.

All pipe extending into basins and inlets shall be trimmed within 1”-2” of the inside wall surfaces shall be neatly grouted inside and out and watertight

Lids, grates, and risers shall be centered over the basin or inlet; unless specifically allowed otherwise.

B. Payment. Catch basins wil

Measurement and Payment shall be made in accordance with the ISPWC 2020 Edition

The unit price shall include bor, excavation, installing catch basins in place including the catch basin rings and lids, and backfilling.

18.7 Risers

A. Risers for height adjustment shall be as per WSDOT’s standard for the precast unit being furnished.

ES-19. TRENCH EXCAVATION AND BACKFILL

19.1 Scope

This section covers the work necessary for the trench excavation and backfill above the pipe zone. Pipe zone backfill is included under the specification for the pipe.

19.2 Type of Backfill

The class of backfill to be used above the pipe zone shall be as set forth on the Plans or as given in the project Special Provisions and if not specifically set forth in project documents then as required by the "use" description given herein. The right is reserved to modify the use, location, and quantities of the various types of backfill, during construction, as the Engineer considers being in the best interest of the Owner.

Trench backfill, above the pipe zone, shall be as follows:

1. Class A Backfill. Use in landscaping and agricultural type areas where lawn sod, shrubs, topsoil, fences, and other landscape items are either being replaced or are anticipated.
2. Class B Backfill. Use within existing or proposed gravel parking lots – not within gravel streets or alleys.
3. Class C Backfill. Use in areas where asphalt pavement, concrete, curb, sidewalk, gravel surfacing, landscaping and agricultural use is not anticipated, present or future.
4. Class D Backfill. Use in existing gravel streets and alleys, existing gravel roadway shoulders and in areas where asphalt pavement, concrete, curb, and sidewalk is existing or anticipated in the future.
5. Class E Backfill. Use in lieu of Class D Backfill in new streets when specifically allowed by the City Engineer.
6. Class F Backfill. Use within and immediately adjacent to existing asphalt paved streets, alleys, driveways, and parking lots.

19.3 Excavation and Backfill for Fire Hydrants

~~Excavation and backfill for fire hydrants shall be included in the unit price payment for Fire Hydrants (See ES-22).~~

Measurement and Payment shall be made in accordance with the ISPWC 2020 Edition

19.4 Trench Excavation

Trench excavation shall be classified as common excavation or rock excavation and shall include whatever materials are encountered to the depths as shown or as directed by the Engineer.

Common Excavation. Common excavation is defined as the removal of all material which is not classified as rock excavation.

Rock Excavation. Rock excavation shall conform to all specifications of Section 302, of the latest edition, of the Idaho Standards for Public Works Construction and amendments thereto. A copy of said Specifications is available at the office of the City Engineer.

19.5 Materials

A. Foundation Stabilization. Materials for foundation stabilization shall be 3/4 inch minus crushed rock with reasonable even gradation from coarse to fine and free from excessive dirt or other foreign material.

B. Granular Material. Granular backfill shall be 3/4 inch minus crushed basalt conforming to ES-7 CRUSHED ROCK BASE.

C. Imported Topsoil. Imported topsoil shall possess friability and a high degree of fertility. It shall be free of clods, roots, gravel and other inert material. It shall be free of quack grass, horsetail and other [illegible] uld such regenerative material be present in the soil, it s[illegible] ntractor to remove all such growth, both surface and root, which may appear in the planting within one year following acceptance of the job, at his/her own expense, and in a manner satisfactory to the Owner.

Import Topsoil shall be per ES-27

D. Compaction Equipment. Compaction equipment shall be of suitable type and adequate to obtain the amount of compaction specified. Compaction equipment shall be operated in strict accordance with the manufacturer's instructions and recommendations and shall be maintained in such condition that it will deliver the manufacturer's rated compactive effort.

19.6 Workmanship

A. Clearing. Do not remove existing trees or tree limbs over 2 inches in diameter, whether on public or private property, unless they are within 4 feet of the pipe centerline without permission from the Engineer. All such work shall conform to the City's Community Forestry ordinance. The Contractor shall bear all costs of disposing of trees, stumps, brush, roots, limbs, and other waste materials from clearing operations. Material shall be disposed of in such a manner as to meet all requirements of state, county and local regulations regarding health, safety and public welfare.

B. Obstructions. This term refers to obstructions which may be removed and do not require replacement. Obstructions within the trench area or adjacent thereto such as tree roots, stumps, abandoned piling, buildings and concrete structures, logs, rubbish and debris of all types shall be removed without additional compensation from the Owner. The Engineer will, if requested, make changes in the trench alignment to avoid major obstructions; if such alignment changes can be made within the perpetual easement and right-of-way and without adversely affecting the intended function of the facility.

The contract amount will be adjusted accordingly for any cost changes resulting from such alignment modifications.

Dispose of obstructions removed from the excavation in accordance with section ES-4 REMOVALS AND DISPOSALS.

Asbestos Cement may be encountered. Contractor shall perform work per all State and Federal requirements.

C. Utility Repairs. Any and all underground utility damaged in any way during trench excavation shall be repaired and properly backfilled, by the Contractor, at no cost to the City. The repair shall be as approved by the City – NO EXCEPTIONS.

D. Removal and Replacement of Topsoil. In all cases where trenches cross lawns, garden areas, pasture lands, cultivated fields, or other areas on which reasonable topsoil conditions exist; first remove the topsoil for a depth of 10 inches for the full width of the trench to be excavated. Stockpile this topsoil to one side of the right-of-way and do not mix with the remaining excavated material. Replace the topsoil in the top 10 inches of the backfilled trench.. In lieu of stockpiling the top 10 inches of soil, "Imported Topsoil" from borrow pits may be substituted in the top 8 inches. Maintain the finished grade of the topsoil, over the center line of the trench, level with the immediate area bordering the trench, until acceptance of final seeding. Correct all damage to adjacent topsoil caused by trenching or pipe laying operations by removal of all rock, gravel, clay, and any other foreign materials from the surface and by regrading the additional topsoil as required.

E. Pavement, Curb and Sidewalk Removal. Cut (full depth) all asphaltic concrete or Portland Cement concrete pavements (regardless of the thickness), and all curbs and sidewalks prior to excavation of the trenches with an approved pavement saw, hydrohammer or other approved pavement cutter. Removal of street surfacing for excavations shall comply with the Specifications and Standard Drawing for Street/Alley Curb Repair. Pavement and concrete materials removed shall be hauled from the site and not used for trench backfill.

or per manufacturer's recommendations (whichever is greater)

F. Trench Width. Minimum width of trenches in which pipe is to be laid shall be 18 inches greater than the inside diameter of the pipe except by permission of the Engineer.

The maximum clear width at the top of the trench will not be limited, except in cases where excess width of excavation would cause damage to adjacent structures or property.

In all cases, confine trench widths to dedicated rights-of-way for public thoroughfares or within areas for which construction easements have been obtained.

G. Grade. Carry the bottom of the trench to the lines and grades shown, or as established by the Engineer, with proper allowance for pipe thickness and for pipe base or special bedding, when required. If the trench is excavated below the required grade, correct any part of the trench excavated below the grade, at no additional cost to the Owner, with gravel of the type specified for pipe zone material. Place the gravel over the full width of trench in compacted layers, not exceeding 6 inches deep, to the established grade with allowance for the pipe base or special bedding.

H. OSHA Compliance. All trench excavation and backfill shall conform to the latest published OSHA regulations, NO EXCEPTIONS.

I. Location of Excavated Materials. During trench excavation, locate the excavated material within the construction easement or right-of-way or specified working area so

that the excavated material will not obstruct private or public traveled roadways or streets. It shall be the contractor's responsibility to conform with the federal, state and local codes governing the safe loading of all trenches with excavated material.

J. Removal of Water. Provide and maintain ample means and devices which will promptly remove and dispose of all water entering the trench excavation during the time the trench is being prepared for the pipe laying, during the laying of pipe, and until the backfilling of the pipe zone has been completed. These provisions shall apply during the lunch hour as well as overnight.

Dewatering shall be per ISPWC Section 205 and Special Provisions

Dispose of the water in an approved manner without damage to adjacent property.

Drainage of trench waste through the pipeline, under construction, is prohibited.

K. Foundation Stabilization. When, in the opinion of the Engineer, the existing material in the bottom of the trench is unsuitable for supporting the pipe, excavate below the flow line of the pipe, as directed by the Engineer, and backfill the trench to the subgrade of pipe base with ~~approved material.~~ Place the material over the full width of the trench in compacted layers, not exceeding 6 inches deep, to the established grade.

with foundation stabilization material per ES-19.5

L. Backfill in Pipe Zone. Pipe zone backfill is included in the Specification for the pipe.

M. Trench Backfill Above Pipe Zone. Do not push the backfill material into the trench in such a way as to permit free fall of the material into the open trench, until at least 2 feet of cover is provided over the pipe. Under no circumstances allow sharp, heavy pieces of material to drop directly onto the pipe or the tamped material around the pipe. Do not use backfill material of consolidated masses larger than 1 cubic foot.

N. Classes of Backfill.
Trench backfill shall comply with the City's Standard Construction Drawings and as follows:

1. <u>Class A Backfill</u>
Backfill the trench, above the pipe zone, with approved excavated trench material to within 10 inches of final surface grade. Compact the entire trench depth in suitable lifts with a vibratory compactor, pneumatic or gasoline powered tampers, or hydraulic hammers. Determine the method and type of equipment and amount of compaction required to prevent subsequent settlement.

Where Class A backfill is specified replace topsoil in the top 10 inches of the trench. Compact and rake to match the ground surface adjacent to the trench.

Maintain the surface of the backfilled trench level with the existing grade until the entire project is accepted by the Owner. Any subsequent settlement of the finished surfacing during the warranty period shall be considered to be a result of

improper or insufficient compaction and shall be promptly repaired by the Contractor at no cost to the Owner.

2. Class B Backfill

Backfill the trench, above the pipe zone, with approved excavated trench material to within 6 inches of final surface grade. Compact the entire trench depth in suitable lifts with vibratory compactors, pneumatic or gasoline power tampers, or hydraulic hammers. Determine the method and type of equipment and the amount of compaction required to prevent subsequent settlement. Place and compact granular material in the top 6 inches.

Maintain the surface of the backfilled trench level with the existing grade by additions of granular backfill material, as specified, until final surface replacement is completed or the entire project is accepted by the Owner. Any subsequent settlement of the finished surface, during the warranty period, shall be considered to be a result of insufficient compaction and shall be promptly repaired by the Contractor at no cost to the Owner.

3. Class C Backfill

After the completion of the backfilling of the pipe zone, the excavated trench material may be pushed back into the trench by mechanical means.

In all locations where Class C backfill is used, the Contractor shall make his/her own estimate of the amount of backfill material required at the trench, so that after normal settlement has occurred, the finished surface will meet the existing grade. Neatly windrow the material over the trench and remove all excess. Any excess or deficiency of backfill material, which becomes apparent after settlement within the warranty period, shall be corrected by regrading, disposing of excess material or adding additional material where required. Remove rocks larger than 2 inches from the upper 8 inches of backfill.

4. Class D Backfill

Backfill the entire trench, above the pipe zone, with granular backfill material. Compact the entire trench depth to 95 percent density in 6 inch lifts with mechanical, vibrating or impact tampers. Determine the method and type of equipment and amount of compaction required to prevent subsequent settlement.

Maintain the surface of the backfilled trench level with the existing grade with crushed rock backfill material until final surface replacement is completed or the entire project is accepted by the Owner. Any subsequent settlement of the finished surface during the warranty period shall be considered to be a result of insufficient compaction and shall be promptly repaired by the Contractor at no cost to the Owner.

5. Class E Backfill

Class E trench backfill is to be used only where a new paved street is going to be constructed above the installed pipe.

The width of the trench, above the pipe zone, may be increased beyond the required specifications for pipe zone width, as described in the City of Moscow Standard Drawing #15, but shall not be less than (6) six feet.

Approved native excavated material may be used for backfill above the pipe zone in this widened trench. Compaction for all trench backfill, above the pipe zone, shall be 95% minimum of AASHTO T-99. All native backfill shall be placed in (6) six inch maximum lifts and method of compaction shall be only by a (5) five foot minimum wide sheepsfoot roller. Density testing frequency, for this approved native excavated material, will be in excess of that required for the Class 'D' crushed basalt backfill.

6. Class F Backfill

Backfill the trench, above the pipe zone, with granular material to within 4 inches of the finished surface.

Compact the entire trench, above the pipe zone, in six (6) inch maximum lifts with vibratory compactors, pneumatic or gasoline power tampers, or hydraulic hammers to a minimum 95 percent standard density. The top 4 inches of the trench is to have smooth cut edges before being backfilled with two equal lifts of asphaltic concrete patching mix.

7. Subsurface Drain Backfill

Backfill the entire trench to within 10 inches of the final surface grade or to the street subgrade, as applicable, with crushed or naturally occurring granular material from approved sources.

The material shall be washed, if necessary, to render the particles free from clay. It shall contain no more than 1% of clay lumps or other decomposed material. It shall conform to the following requirements for grading:

Sieve Size	Percent Passing
3"	100
2.5"	95 – 100
3/4"	50 – 80
1/4"	30 – 60
No. 8	20 – 50
No. 30	8 – 30
No. 50	3 – 12
No. 200	0 – 1.2

* All percentages are by weight.

That portion of the gravel backfilled for drains retained on a 1/4" square sieve shall not contain more than 0.05% by weight of wood waste.

Compaction, above the pipe zone, shall be accomplished by the use of mechanical, vibrating or impact tampers. Determine the method and type of equipment to use and amount of compaction required to prevent subsequent settlement.

Maintain the surface of the backfilled trench level with the existing grade by additions of granular backfill material as specified until final surface replacement is completed or the entire project is accepted by the Owner. Any subsequent settlement of the finished surface, during the warranty period, shall be considered to be a result of insufficient compaction and shall be promptly repaired by the Contractor at no cost to the Owner.

O. Maintenance of Excavated Trench. Maintain the excavated trench between any two successive valved sections of pipeline or as specified in the project Special Provisions until the following operations have been completed, to the satisfaction of the Engineer, for waterline construction: Service connections have been installed, including pressure tap; valves, valve boxes, hydrants and thrust blocks installed, hydrostatic or air testing, sterilization, cleanup and restoration of all physical features, utilities restored to their original condition, or better, and in general, all work required between the two line valves accomplished with the exception of repaving.

P. Maintenance of Trench Backfill. This maintenance shall include, but not be limited to, the addition of crushed rock backfill material to keep the surface of the backfilled trenches reasonably smooth and free from excessive ruts and potholes and suitable for normal traffic flow.

Trenches backfilled within existing paved streets shall be temporarily surfaced with 2.5 inches of cold mix asphalt pavement; which temporary cold mix surfacing shall be placed within one day of completion of trench backfilling. This temporary patch shall be installed and maintained smooth until the permanent hot mix patch is installed. Under certain circumstances, this requirement may be waived by the City Engineer.

No additional payment will be made for the maintenance of the trench backfill prior to completion of the work outlined above, and the trench backfill maintenance and shall be considered as incidental to that item of work.

Q. Disposal of Excess Excavation. All excess excavation not required or suitable for backfill shall be disposed of in a waste area arranged by the Contractor.

R. Drainage Culverts. Replace, in like kind, drainage culverts which are removed or damaged. If the pipe is damaged during removal, dispose of it and furnish and install new pipe. Dispose of culvert pipe that is in too poor condition to reuse because of age or

physical conditions. Repair drainage pipes with manufactured fittings only; encase Ferncos in concrete.

S. Blasting. Blasting shall conform to all specifications of Section 302, of the latest edition, of the Idaho Standards for Public Works Construction and amendments thereto. A copy of said specifications is available at the office of the City Engineer.

19.7 Payment

Measurement and Payment shall be made in accordance with the ISPWC 2020 Edition

Payment for trench excavat in line pipe as follows:

A. Trench Excavation and Backfill. Payment for trench excavation and backfill shall be included in the price per linear foot of the respective pipe stated in the Contractor's bid proposal.

Payment for trench excavation and the respective backfill shall constitute full compensation for all work specified and incidental to the price per linear foot of the respective pipe.

Pipe zone backfill is specified under Section ES-20 PIPE.

B. Rock Excavation. Rock excavation shall be measured for payment as the actual quantity of rock removed within the approved limits.

ES-20. PIPE

20.1 Storm Sewer Pipe

Mains, **4-inch to 15-inch**: SDR 35 PVC ASTM D 3034, gasketed.

Mains, **18-inch to 36-inch**: Solid wall PVC ASTM F 679 or HDPE (High Density Polythylene) AASHTO M 294, smooth-walled interior, silt-tight.

Culvert Pipe: Corrugated Steel Pipe and Pipe Arches conforming to AASHTO M 36, 2-2/3" x ½ corrugations. Round pipe shall be 16 gage minimum; arch pipe shall be 12 gage minimum.

Storm Sewer Service Laterals: SDR 35 PVC ASTM D-3034, except as follows: where a service lateral crosses a water main or a water service line with less than 18 inches of clearance between the two pipes the sanitary sewer service lateral pipe shall be un-jointed PVC pressure water pipe, either Schedule 40 PVC or Class 160 PVC ASTM D-2241 for distance nominally ten feet each side of the crossing. This pressure water pipe shall be joined to standard SDR 35 PVC pipe at both ends with FERNCO couplers having stainless steel shear ring bands.

Reference ISPWC for Storm Drain Testing and CCTV Inspection Requirements per ISPWC Division 600

Reference ISPWC for Sewer Testing and CCTV Inspection Requirements per ISPWC Division 500

20.2 Sanitary Sewer Pipe

All sanitary sewer pipe shall be a minimum of eight (8) inch diameter except sewer to house connections which shall be a minimum of four (4) inch diameter.

Mains, 8-inch diameter and larger: SDR 35 PVC ASTM D-3034.

Service Laterals: SDR 35 PVC ASTM D-3034, except as follows: where a service lateral crosses a water main or a water service line with less than 18 inches of clearance between the two pipes the sanitary sewer service lateral pipe shall be un-jointed PVC pressure water pipe, either Schedule 40 PVC or Class 160 PVC ASTM D-2241 for distance nominally ten feet each side of the crossing. This pressure water pipe shall be joined to standard SDR 35 PVC pipe at both ends with FERNCO couplers having stainless steel shear ring bands.

20.3 Perforated Subsurface Drain Pipe

A. General. A perforated roadway underdrain system may be shown on the Plans and shall be furnished and installed as herein described in these Specifications, as shown on the City's Standard Construction Drawings and as shown on the Plans.

Laterals will generally be connected to the collector at 60° angles. The terminal end of each lateral will be sealed with a plug. All connections between pipe sections and branches are to be water tight.

The pipe shall be wrapped with a filtering sock.

Perforated Subsurface Drain Pipe that is corrugated on the inside will not be allowed.

Perforated pipe and fittings shall not be dumped into the trench. All pipe shall be inspected prior to lowering into the trench and if necessary cleaned of any material tending to plug the perforations of the pipe.

Pipe shall be laid with the perforations at the bottom or as per manufacturer's instructions.

Gravel backfill for drains shall be as defined under Section ES-19 TRENCH EXCAVATION AND BACKFILL.

B. Types of Pipe. Perforated subsurface drain pipe as indicated on the plans and standard drawings shall be one of the following types of pipe or as approved by the Engineer:

1.Perforated Corrugated Plastic Pipe
This pipe shall be Advanced Drainage System (ADS) N-12 pipe or approved equal. The pipe shall be 4" in diameter, having at least two (2) rows of perforations parallel to the axis of the pipe. The pipe and fittings shall meet the

requirements of AASHTO M-252 Type S (corrugated outside-SMOOTH INSIDE). The joints shall be gasketed non-water tight joints (Soil tight per AASHTO section 26); Gaskets may be architectural weather stripping material per ASTM D-1056 or rubber per ASTM F-477.

2. Perforated Solid Wall Plastic Pipe

This pipe shall be Advanced Drainage System (ADS) pipe or approved equal. The pipe shall be 4" in diameter, having at least two (2) rows of perforations parallel to the axis of the pipe. The pipe and fittings shall meet the requirements of AASHTO M-252. The joints shall be gasketed non-water tight joints (Soil tight per AASHTO section 26); Gaskets may be architectural weather stripping material per ASTM D-1056 or rubber per ASTM F-477.

20.4 Water Pipe & Ductile Iron Fittings

See Division 400 of Section 3 of the Bid Documents for Water Specifications.

A. Joints. Pipe joints sh[illegible]cifically shown or detailed otherwise.

B. Mechanical Joint Fittings. Three-inch through sixteen inch mechanical joint ductile iron fittings shall be Tyler SSB Class 350 ductile iron fittings, or an approved equal, and shall conform to ANSI/AWWA C-111

C. Flanged Ductile Iron Fittings. Flanged fittings shall conform to ANSI/AWWA C-110 and shall be faced and drilled to 125-pound ANSI. The fittings shall be 125 PSI rated working pressure and cement-mortar lined to same thickness specified for pipe.

D. Mechanical Couplings. Mechanical couplings, not a part of the pipe itself, shall be ductile iron couplings with long solid sleeves and be Mechanical Joint Class 350. Mechanical couplings shall mean straight couplings, transition couplings, reducing couplings, and flanged coupling adapters.

E. Ductile Iron Pipe. All ductile iron pipe shall be centrifugally cast of 60-42-10 iron and shall conform to ANSI / AWWA C-151. Thickness class or classes shall be 51(minimum). The pipe shall be cement mortar lined and seal coated in accordance with ANSI / AWWA C-104. The rubber ring gaskets shall be suitable for the specified pipe sizes and pressure and shall conform to applicable parts of the latest federal specification ANSI / AWWA C-111, and shall be furnished by the pipe manufacturer. A nontoxic vegetable soap lubricant shall be supplied with the pipe in sufficient quantities for installing the pipe.

F. Polyvinyl Chloride (PVC) Pressure Pipe. All PVC pressure pipe shall conform to pressure Class 150 AWWA C-900 or pressure Class 165 AWWA C-905. All pipe shall be push-on joints with one gasket bell end.

G. Tapping Sleeves. All tapping sleeves shall be ROMAC "SST" Stainless Steel as per ASTM A-240, Type 304 and Type 304L or an approved equal.

See Division 400 of Section 3 of the Bid Documents for Water Specifications.

20.5 Pipe Laying

Pipes shall be laid in straight lines at uniform rates of grade as shown on the plans.

Proper preparation of foundation, placement of foundation material where required, and placement of pipe zone material below the pipe shall precede the installation of all sewer, water and culvert pipe. This shall include necessary leveling of the native trench bottom or the top of the foundation material as well as placement and compaction of required pipe zone material, below the pipe, to a uniform grade so that the entire length of pipe will rest firmly on a well compacted material, so the backfill material around the pipe will be placed in a manner to meet requirements specified under backfilling.

Water pipe delivered for construction shall be handled so as to minimize entrance of foreign material. When pipe laying is not in progress as, for example, at the close of a day's work, all openings in the pipeline shall be closed by water-tight plugs. Joints of all pipe in the trench shall be completed before work is stopped. If water accumulates in the trench, the plugs shall remain in place until the trench is dry.

If dirt that, in the opinion of the Engineer, will not be removed by flushing enters the pipe, the interior of the pipe shall be cleaned and swabbed as necessary with a 5% hyperchlorite disinfecting solution.

A. Backfill at the Pipe Zone. The pipe zone shall be considered to include the full width of the excavated trench from the bottom of the trench (a minimum of 4 inches under the pipe) to a point 12 inches above the top outside surface of the barrel of the pipe.

   Particular attention must be given to the area of the pipe zone from the flow line to the center line of the pipe to insure that firm support is obtained to prevent any lateral movement of the pipe during the final backfilling of the pipe zone.

   Backfill the area of the pipe zone from the bottom to the horizontal center line of the pipe with "imported pipe zone material." Hand place the material around the pipe in 6 inch layers and thoroughly hand tamp with approved tamping bars supplemented by "walking in" and slicing with a shovel.

   All material, within the pipe zone, shall be hand tamped and done in such a manner as to not change the grade of the pipe (particularly gravity pipe).

B. Joints. In making the joints on the pipe care shall be exercised to clean all dirt, rock or other foreign matter completely from the inside of the bells and the outside of the spigots. The pipe shall be forced tightly in place with a bar or mechanical puller of a type approved by the Engineer. When the pipe is aligned it shall be supported by placing sufficient backfill material alongside and carefully tamped into place as described under Section 20.5.A.

See Division 400 of Section 3 of the Bid Documents for Water Specifications.

When two different types of gravity pipe are joined together, a Fernco coupler may be used, upon approval of the Engineer. The completed connection shall be supported, in such a manner, as to maintain established line and grade and shall be encased, on all sides, with a minimum of four (4) inches of concrete. The concrete shall extend a minimum of two (2) feet on each side of the coupler.

Lubricant for water pipe gaskets shall be supplied by the pipe manufacturer.

C. Caps and Connections. Caps for pipe branches, stubs, or other open ends which are not to be immediately connected shall be made of an approved material and shall be secured in a place with a joint comparable to the main line joint, or stoppers may be of an integrally cast breakout design. Caps of the type recommended by the pipe's manufacturer shall be used.

D. Imported Pipe Zone Material. Granular material for pipe zone backfill shall be 3/4" minus crushed rock unless otherwise specified. The material shall meet the specifications, of the latest edition, of the Idaho Transportation Department Standard Specifications for Highway Construction and amendments thereto.

E. Water Main Location and Separation. The location and separation of the water and non-potable water main pipes, both horizontal and vertical, shall meet the most current requirements of IDAPA 58.01.08 – Idaho Rules for Public Drinking Water Systems.

F. Permissible Deflection at Joints - Water Pipe. Wherever it is necessary to deflect pipe from a straight line, either in the vertical or horizontal plane, to avoid obstructions or where long radius curves are permitted, the amount of deflection allowed shall not exceed the values in the following table:

*MAXIMUM DEFLECTION PERMITTED (18 FOOT LENGTH PIPE)

Bell and Spigot		Mechanical Joint	Push-on Joint	
Diameter (Inches)	Max. & Min. Deflection Angle (Degrees)	Deflection (Inches)	Max. Deflection Angle (Degrees)	Deflection (Inches)
6	7-07	27	5	19
8	5-21	20	5	19
10	5-21	20	5	19
12	5-21	20	5	19
14	3-35	13 ½	3	11
16	3-35	13 ½	2	11
18	3-00	11	3	11
20	3-00	11	3	11
24	2-23	9	3	11

See Division 400 of Section 3 of the Bid Documents for Water Specifications.

*The maximum deflection shall be whichever is less, the table or that recommended by pipe manufacturer.

G. Anchorage (water pipe)

1. Limiting Pipe Diameter and Degree of Bend
On all pipelines 6 inches in diameter or larger, securely anchor by suitable thrust blocking all tees, plugs, caps, and bends where unbalanced forces exist, as directed by the Engineer.

2. Thrust Blocking
Provide thrust blocks as required by the Standard Construction Drawings. The concrete mix shall have a compressive strength of not less than 2500 psi. Place blocking between the undisturbed ground and the fitting to be anchored; plastic sheathing to be placed between the concrete and fitting. The bearing surface shall be as shown or as directed by the Engineer. Place the blocking so that the pipe and fitting joints will be accessible to repairs, unless otherwise shown.

3. Metal Tie Rods
Metal tie rods, if specifically required by the Plans or the Engineer, shall be used in conjunction with thrust block. The rods, nuts and washers shall be coated with a rust resistant coating. (A product intended for such use.)

20.6 Pipe Testing and T. V. Inspection

A. Sanitary Sewer Pipe. The fin ight against leakage from either the inside or the outsid

Sanitary Sewer Pipe Testing and CCTV inspection shall be per ISPWC Division 500 and performed by the contractor.

All wyes, tees, and stubs shal ted caps, or acceptable alternate, securely fastened to withstand the internal test pressure. Such plugs or caps shall be readily removable, and their removal shall provide a socket suitable for making a flexible jointed lateral connection or extension.

Exfiltration testing of the sanitary sewer pipe will be conducted by the Contractor, under the supervision of the Engineer, or his/her representative, after the sewer line is backfilled. The Contractor shall notify the Engineer at least twenty-four (24) hours in advance of his/her intention to pressure test the line.

If the test indicates that there is excessive leakage in the line the Contractor shall make repairs, at his/her own expense, and take such corrective action as may be required by the Engineer.

T.V. inspection of the sanitary and storm sewer pipe will be conducted by the City after the pipe has been backfilled and the manholes are accessible.

1. Exfiltration Test (Using Air)

See Division 400 of Section 3 of the Bid Documents for Water Specifications.

The Contractor shall plug all openings in the pipe and supply necessary metering equipment and hoses for the test and a blower or compressor with adequate capacity to perform the test.

Immediately following the pipe cleaning, the pipe installation shall be tested with low pressure air. Air shall be slowly supplied to the plugged pipe installation until the internal air pressure reaches four (4) pounds per square inch greater than the average back pressure of any ground water that may submerge the pipe as determined by the Engineer.

At least two minutes shall be allowed for temperature stabilization before proceeding further. The inspector will then accurately determine the time of loss of one (1) psi. This time interval shall not be less than the time interval determined in the following formula.

$$T = 0.0109\ D2L$$

T = time in seconds
D = nominal inside diameter of pipe in inches
L = length of pipe in feet

Failure to meet or exceed the computed time interval for the loss of of one (1) psi will be cause for rejection of the sewer pipe.

All repairs necessary to meet these requirements and/or testing will be at the expense of the Contractor.

The maximum length of sewer pipe, for the above tests, shall be the distance between consecutive manholes. Any section of sewer pipe, between any two manholes that does not meet the above requirements, shall be rejected.

2. T.V. Inspection

Sanitary Sewer Pipe Testing and CCTV inspection shall be per ISPWC Division 500 and performed by the contractor.

T.V. inspection, (by the [illegible] anitary and storm sewer pipes will be required, p[illegible]nt of asphalt on the roadway. It shall be the [illegible]r to give the Engineer ample advance notice o[illegible] is to be performed to assure the timely scheduling of the City's personnel and equipment.

Any and all imperfections (i.e. sags in the pipe invert, joints not fully seated, offset joints, poor manhole entries and exits, etc.) found in the installation of the pipe shall be immediately repaired by the Contractor at no cost to the City. Such repairs shall be as allowed and directed by the City Engineer.

B. Water Pipe

See Division 400 of Section 3 of the Bid Documents for Water Specifications.

~~All new watermain shall pass City standard pressure testing and bacteriological testing. Pressure testing, flushing, disinfection, and bacteriological testing shall be performed by the City Water Department. All testing, flushing, and disinfecting materials and labor costs of the City's must be paid by the Contractor. It is the Contractor's responsibility to repair all leaks. The test pressure shall be 1-½ times the working pressure of the pipe per AWWA standards. The bacteriological test criteria shall be as follows: one test showing "absence" of coliform bacteria (<1) and a standard plate count of less than 100. The Contractor shall be responsible for all excavation and back fill necessary to allow the City Water Department access to the new main for the City to furnish, install, and remove all corporation stops necessary to test, chlorinate, and bacteriological sample the new main as required. This includes backfill and trench surfacing once and then returning to the site to re-excavate and re-backfill (including cold mix patching) any corporation stops that remain in the main during disinfecting and sampling procedure. Where connections are made to existing mains the fitting and pipe shall be thoroughly cleaned and spray disinfected with 150(+) ppm chlorine solution immediately prior to their installation and such procedure shall be witnessed by a representative of the City; such operations by the contractor require the City to be notified a minimum of 48 hours in advance. The 48 hour notice is necessary to allow the City crew to notify customers of the water outage. The contractor shall be responsible for coordinating and cooperating with the City Water Department for testing, flushing, and disinfecting activities.~~

20.7 Plugging Existing Pipe

Where shown in the Plans or where designated by the Engineer, existing pipes shall be plugged on the inlet end for a distance of 2 diameters with commercial concrete. Care shall be used in placing the concrete in the pipe to see that the opening of the pipe is completely filled and thoroughly plugged.

20.8 Basis of Payment

Measurement and Payment shall be made in accordance with the ISPWC 2020 Edition

A. ~~Storm Sewer Pipe. The ll be paid for by the unit price per linear foot nishing and laying pipe, as herein described, including furnishing and installing lock bands at each joint and all pipe zone material.~~

B. ~~Sanitary Sewer Pipe. The accepted quantities of sanitary sewer pipe will be paid for by the unit price per linear foot and shall include all costs incidental to furnishing and laying pipe. The cost of furnishing all pipe zone material is also included in this item.~~

C. ~~Perforated Sub-surface Drain Pipe. The accepted quantities of subsurface drain pipe will be paid for by the unit price per linear foot and shall include all costs incidental to furnishing and laying pipe, as herein described, including all angle branches, plugs, pipe connectors, and all pipe zone material.~~

Measurement and Payment shall be made in accordance with the ISPWC 2020 Edition

D. Water Pipe & [illegible] he water pipe, including fittings, thrust blocks and couplings will be made at the unit price per linear foot.

E. Plugging existing pipes will be measured per each, for each plug installed, for pipe diameters up to and including 36 inches. The concrete for plugging pipes in excess of 36 inches in diameter will be measured by the cubic yard. Computations for corrugated metal pipes will be based on the nominal diameter.

The measurement for payment will be the field measured centerline length of the pipe in place within the limits shown. Laying lengths of valves, fittings and couplings will be included. Payment for fittings, couplings and thrust blocks shall be considered incidental to the cost of the respectively-sized pipe.

Payment for valves will be made at a per each unit price.

ES-21 GATE VALVES AND VALVE BOXES

21.1 Scope

This section covers the work necessary for furnishing and installing the gate valves and valve boxes, complete.

21.2 Materials

A. Gate Valves (all sizes). Valves shall be ductile iron AMERICAN FLOW CONTROL SERIES 2500 resilient seated valves, or an approved equal, and shall open when the stem is rotated counterclockwise. Unless otherwise shown, valves shall have 2-inch square wrench nut. Valve ends and valve sizes shall be shown. Valves shall conform to ANSI / AWWA C-509.

B. Valve Boxes. Valve boxes for valves 12" in size and smaller shall be Buffalo 2-piece slip - type, cast iron with 5-1/4 inch shaft, and shall be TYLER 6855 series of appropriate length for the installation, or approved equal. Valve boxes for valves over 12" in size shall be Buffalo 3-piece sliding type cast iron with 5-1/4 inch shaft and shall be TYLER 6855 series of appropriate length for the installation or approved equal. The word "Water" shall be cast into the top of the lids. Extension pieces, if required, shall be the manufacturer's standard type for use with the valve boxes.

C. Extension stems for valve operators. Where the depth of the opening nut is more than 4.5 feet, standard operating extensions shall be provided to bring the operating nut to a point 3.5 feet below the surface of the ground or pavement. The extension stem shall be constructed of steel (and coated).

21.3 Workmanship

A. Valves. Before installation, the valves shall be thoroughly cleaned of all foreign material, and shall be inspected for proper operation for both opening and closing, and to verify that the valves seat properly. Valves shall be installed so that the stems are vertical, unless otherwise directed by the Engineer. Jointing shall conform to AWWA C-600 or AWWA C-603, whichever is applicable. Valves shall be installed in accordance with "Standard Details". Joints shall be tested with the adjacent pipeline. If joints leak during the test, valves shall be disconnected and reconnected, and the valve and/or the pipeline retested.

Faces of flanges shall be cleaned thoroughly before flanged joint is assembled. After cleaning, the gasket shall be inserted and the nuts tightened uniformly around the flange. If flanges leak under test, the nuts shall be loosened, the gasket reset or replaced, the nuts retightened, and the valve and/or pipeline retested.

Valves on all service connections and stubouts, 4 inch and larger, shall be mechanical joint and shall be restrained with coated tie rods.

B. Valve Boxes. Center the valve boxes and set plumb over the wrench nuts of the valves. Set valve boxes so that they do not transmit shock or stress to the valves. Set the valve box covers flush with the surface of the finished pavement as shown, or such other level as may be ordered by the Engineer. Cut extensions to the proper length so that the valve box does not ride on the extension when set at grade.

Backfill shall be the same as specified for the adjacent pipe. Place backfill around the valve boxes and thoroughly compact to a density equal to that specified for the adjacent trench and in such a manner that will not damage or displace the valve box from proper alignment or grade. Misaligned valve boxes shall be excavated, plumbed, and backfilled at the Contractor's expense.

Valve boxes shall be clean prior to final project acceptance.

21.4 Payment

Measurement and Payment shall be made in accordance with the ISPWC 2020 Edition

Payment for gate valves f ve boxes will be by the unit prices per each. Payment for the gate valves and valve boxes shall constitute full compensation for the work as specified under this section.

Payment for gate valves and valve boxes furnished and installed as auxiliary valves on hydrants shall be included in the unit price for hydrants.

ES-22. FIRE HYDRANTS

22.1 Scope

This section covers the work necessary for furnishing and installing the fire hydrants, complete, and the work necessary for the removal of existing hydrants.

22.2 Materials

A. Low Pressure Hydrants. Hydrants to be corey pattern with nominal 5-1/4 inch main valve opening with 6 inch bottom connections. Equip with two 2-1/2 inch hose nozzles and one 4-1/2 inch pumper port with a 5 inch Storz hose nozzle. The Storz nozzle shall be an integral part of the fire hydrant and must be furnished by the manufacturer or authorized distributor designated by the manufacturer. Storz adapters will not be accepted. Operating nut shall be equipped with O-ring seals and shall open when turned to the left or counterclockwise. Hydrants shall be of the break-flange or safety-top type. Hydrants shall conform to AWWA C-502, and these Specifications. The depth of bury will generally be 5 feet; and as required to accommodate site conditions. Nozzle threads shall be American National Standard. The hydrant isolation valve shall be attached to the tee at the main and all of the piping shall be restrained from the tee to the hydrant with flanged fittings, retaining glands (mega lugs, etc.) or tie rods as approved by the City Engineer. Hydrants shall be factory painted or may be painted by the contractor using a high quality industrial enamel high intensity red paint above the ground line; spray can paint will not be allowed.

B. Manufacturer, “Model”: Waterous, “Pacer” or Mueller, “Centurian”

C. Base Block. Solid precast concrete pier block having nominal dimensions of 8-inch thickness by 15-inch square base.

D. Drain Rock. Washed 1-1/2 inch crushed rock or graded river gravel free of organic matter, sand, loam, clay, and other small particles that will tend to restrict water flow through the gravel.

E. Concrete for Thrust Blocking. City Standard per ES-11 CONCRETE.

F. Thrust Ties. 3/4 inch diameter steel rods and duc-lugs as manufactured by Stellar Corporation, Columbus, Ohio, or approved equal. Rods shall have rust resistant protective coating.

G. Auxillary Gate Valve. See City Standard ES-21 GATE VALVES AND VALVE BOXES.

22.3 Workmanship

Construction and installation shall conform to the detail on the Plans and to provisions of Sections 11 and 12 of AWWA C-600, except where otherwise specified.

A. Location and Position. Locate as shown or directed so as to provide complete accessibility and minimize possibility of damage from vehicles or injury to pedestrians. A 3-foot clear space shall be provided and maintained around the circumference of the hydrant or as approved by the Engineer. Where hydrants are subject to impact by a motor vehicle, guard posts other approved means shall be provided as approved by the Engineer. Improperly located hydrants shall be disconnected and relocated, at the Contractor's expense.

   When placed behind the curb, set hydrant barrel so that the face of the pumper or hose nozzle cap will be 2 feet from the back of the curb. When set in lawn space between curb and sidewalk, or between sidewalk and property line, let no portion of the hydrant or nozzle cap be within 12 inches of the sidewalk.

   Set all hydrants plumb and nozzles parallel with, or at right angles to the curb, with the pumper nozzle facing the curb. Set hydrants so that safety flange is a minimum of 3 inches and maximum of 6 inches above finished ground or sidewalk level to clear bolts and nuts, and as directed.

B. Excavation. Do not carry below sub-base grade. Replace over-excavated areas with gravel, and hand tamp to provide firm foundation.

C. Base Block. Place on firm level sub-base to assure uniform support.

D. Installation of Hydrants. Place hydrant carefully on base block to prevent the base block from breaking. After hydrant is in place and connected to the pipeline, place temporary blocks to maintain the hydrant in a plumb position during subsequent work.

E. Drain Rock. Place gravel around base block and hydrant bottom after hydrant has been blocked in place. Drain gravel shall be not less than 6 inches above hydrant drain opening. Do not connect drainage system to sewer.

F. Concrete Thrust Blocking. Place after hydrant is blocked in its final position and hydrant is joined to pipe. Concrete thrust block shall have a minimum of 4 square feet of bearing area against undisturbed earth. Restraint devices such as flanged fitting, mega lugs, or tie rods may be used in lieu of thrust blocks if approved by the City Engineer.

G. Bury Depth and Thrust Ties. The ground surface around fire hydrants shall be as follows:

   1. Behind the hydrant: The ground surface shall be a minimum of 4.5 feet above the hydrant base (as measured from ‘level’) for a distance of at least 10 feet behind the back of the hydrant. The City Engineer may approve a lesser bury requirement if thrust ties consisting of two ¾ inch coated steel tie rods connecting

the hydrant to the valve and the main are utilized. All earthen fill behind hydrants for a minimum distance of 10 feet shall be compacted full depth to a minimum of 95% of AASHTO T99 proctor value.

2. Sides of the hydrant: The ground surface shall be a minimum of 4.5 feet above the hydrant base (as measured from 'level') for a distance of at least 6 feet from the centerline of the hydrant barrel. All earthen fill at the sides of the hydrant for a minimum distance of 6 feet shall be compacted full depth to a minimum of 95% of AASHTO T99 proctor value.
3. Front of the hydrant (towards the main): 4.0 foot minimum cover over the hydrant lateral pipe shall be maintained – as shown on the City of Moscow Standard Construction Drawings.

Measurement and Payment shall be made in accordance with the ISPWC 2020 Edition

~~Payment for existing fire hydrant removal w~~
~~Contractor's bid proposal for each hydrant removed, as covered herein and on the plans.~~

H. Existing Fire Hydrant Removal. Remove fire hydrants on existing city mains as shown on the plans and as directed by the Engineer. The hydrants shall remain the property of the City of Moscow and shall be stockpiled, for the City, at a location to be determined. Care shall be taken so as not to damage the hydrants during removal, transporting, or stockpiling.

22.4 Payment

Measurement and Payment shall be made in accordance with the ISPWC 2020 Edition

~~Payment for fire hydrants fu~~ ~~per each. Payment for fire hydrants shall constitute full compensation for all work specified under this section, and shall include the auxiliary gate valve and connecting pipe from the main line to the valve, and all trench excavation and backfill from the main to the hydrant.~~

~~Payment for existing fire hydrant removal will be made at the per each unit price.~~

ES-23. STORM AND SANITARY CONNECTIONS

23.1 Materials

A. Sewer house connections, where required on the plans or ordered by the Engineer, shall be a minimum of four (4) inch diameter pipe. The pipe shall conform to Specification ES-8.2, Sanitary Sewer Pipe, except that it shall be green in color.

B. Pipe zone material, unless otherwise specified, shall be 3/4 inch minus crushed rock, pea gravel, or clean sand.

23.2 Workmanship

A. The sewer house connections shall be branched from the main sewer line by a Y branch on new mains; by a ROMAC style "CB' saddle on existing sewer mains. Branches shall

be placed where indicated on the plans or as ordered by the Engineer, and shall be installed, at a point, above the centerline of the sanitary sewer main.

B. ROMAC style “CB” saddles shall be furnished and installed by the City and paid for by the contractor.

C. Sanitary sewer services shall not be connected to manholes.

D. Maximum deflection permissible with any one fitting shall not exceed 45 degrees and shall be accomplished with long-radius curves or bends. Short-radius elbows or curves will not be permitted except by approval of the Engineer.

E. Provide ends of all sewer house connection lines with standard watertight plugs, suitably braced to prevent blowoff during internal hydrostatic or air testing. With all plugs in place, test the sanitary sewer lines in accordance with ES-20.6, Pipe Testing and T.V. Inspection.

F. After the line has been tested by the Contractor and accepted by the Engineer, the Contractor shall furnish and install an approved marker, as per City of Moscow Standard Drawings, to identify the ends of the sewer stubs. The marker shall be wrapped with detectable sewer tape.

G. Conform to applicable portions of Section ES-19 Trench Excavation and Backfill and Section ES-20.2 Sanitary Sewer Pipe.

H. Backfill the pipe zone with granular pipe zone material, hand-placed simultaneously on both sides of the pipe for the full trench width and hand-tamped with approved tamping bars supplemented by 'walking in' and slicing with a shovel.

I. Backfill, above the pipe zone, shall conform to applicable portions of Section ES-19 Trench Excavation and Backfill. Do not backfill sewer house connection pipe until inspected and approved by the Engineer.

J. All denuded areas shall be fertilized, re-sown with grass seed and covered with mulch as specified in Sections ES-27 and ES-28.

K. Install as per the Standard Construction Drawings.

L. Separation of storm and sanitary sewer service laterals from water mains and water service lines shall conform to the requirements of Idaho Drinking Water Standards.

23.3 Basis of Payment

Measurement and Payment shall be made in accordance with the ISPWC 2020 Edition

A. ~~Trench excavation and paid for as incidental to the price per linear foot of pipe stated in the Contractor's bid proposal. Payment for that~~

Measurement and Payment shall be made in accordance with the ISPWC 2020 Edition

item shall constitute with excavation and backfill.

B. Sewer house connection pipe, in place, will be paid for on the unit price per linear foot for the appropriate size of pipe stated in the Contractor's bid proposal. Payment for this item shall constitute full compensation for all materials and work required to install the sewer house connection pipe, complete, including trench excavation and backfill. The length of the house connection will be based on the total length of pipe installed, including all fittings, measured along the pipe center line.

ES-24. STREET / ALLEY CUT REPAIR

All excavations in to existing City street paving shall be repaired in accordance with the City's adopted STREET / ALLEY CUT REPAIR policy and as per Standard Construction Drawing entitled STREET /ALLEY CUT REPAIR.

ES-25. EROSION AND SEDIMENT CONTROL

All construction in the City involving earthwork shall comply with all of the requirements of City Code Section 7-1-4 pertaining to Erosion and Sediment Control and the City of Moscow EROSION AND SEDIMENT CONTROL STANDARDS adopted by resolution.

The Contractor shall implement appropriate erosion control eliminating sediment transport to City infra-structure and private property. The Contractor shall pay all costs associated with sediment removal from City infra-structure, private property or environmental remediation.

All sediment control devices shall be installed prior to any ground disturbing activity.

ES-26 STORMWATER RUNOFF CONTROL

All construction and development activity in the City shall comply with all of the requirements of City Code Section 5-15 STORMWATER RUNOFF CONTROL and including Moscow STORMWATER RUNOFF CONTROL STANDARDS adopted by resolution.

ES-27. IMPORTED TOPSOIL

27.1 General

Imported topsoil shall possess friability and a high degree of fertility. It shall be free of clods, roots, gravel and other inert material. It shall be free of quack grass, horsetail and other noxious vegetation and seed. Should such regenerative material be present in the soil, it shall be the responsibility of the Contractor to remove all such growth, both surface and root, which may appear in the planting within one year following acceptance of the job at his/her own expense and in a manner satisfactory to the Owner.

27.2 Payment

Measurement and Payment shall be made in accordance with the ISPWC 2020 Edition

~~Payment for furnishin d according to the unit price bid on the Contractor's bid proposal form or as noted as set forth in the Contract documents.~~

ES-28 SEEDING

28.1 Seed

Seed furnished shall be labeled; true as to variety; noxious weed-free; and meet all purity, germination specifications, and standards of the Federal Seed Act and Idaho State Seed Laws. The variety shall be as required to best satisfy the particular application - as approved by the City Engineer.

28.2 Application

Seed all cut and fill slopes and all other denuded areas where any earthwork has occurred. Seeding shall be done in accordance with Section 621 of the latest edition of the Idaho Transportation Department Standard Specifications for Highway Construction, including all amendments thereto.

28.3 Fertilizer

Fertilizer shall be commercial grade and used in the seeding application in accordance with Section 621 of the latest edition of the Idaho Transportation Department Standard Specifications for Highway Construction, including all amendments thereto.

28.4 Mulch

Mulch shall be used in the seeding operation and shall consist of furnishing and placing mulch in accordance with Section 621 of the latest edition of the Idaho Transportation Department Standard Specifications for Highway Construction, including all amendments thereto.

28.5 Seedbed Preparation

Preparing the surface area to be seeded is part of the seeding operation and shall be done in accordance with Section 621 of the latest edition of the Idaho Transportation Department Standard Specifications for Highway Construction, including all amendments thereto.

28.6 Payment

Measurement and Payment shall be made in accordance with the ISPWC 2020 Edition

~~Seeding will be paid fo pecific contract documents; which may include, but not limited to, the following methods of payment: unit price per unit area; lump sum amount; incidental to other item unit prices; included in a project lump sum amount.~~

ES-29. TREE TRIMMING

Any tree, within the construction area, whose branches, trunk or roots must be removed in order to complete the work, should be trimmed, as directed by the Engineer. All costs for such trimming shall be noted as set forth in the Contract documents. **ALL TREE TRIMMING SHALL CONFORM TO THE APPLICABLE SECTIONS OF THE COMMUNITY FORESTRY ORDINANCE**.

ES-30. INSPECTION

Work performed under this contract shall be inspected at various stages of progress. These inspections include, but shall not be limited to the following:

A. After storm sewer lines, sanitary sewer lines, perforated drain lines and their structures are in place, but before any backfilling is started.

B. Prior to and during the placement of all concrete. This inspection shall be requested when the forms are in place and ready to receive the concrete.

C. After the street has been excavated and compacted, but before any crushed rock is placed.

D. During the application and processing of the crushed rock base and after the crushed rock base has been placed and compacted, but before the prime coat is applied.

E. After valve boxes, catch basins, manholes and monuments have been adjusted to the proper elevation.

F. Prior to and during the placement of prime coat and tack coat.

G. Prior to and during the placement of all superpave hot mix asphalt pavement.

H. At the completion of the job, after all cleanup, backfilling and all other work is done and job is ready for final acceptance.

It shall be the responsibility of the Contractor to notify the Engineer, or his/her representative, when the various phases of the project are ready for inspection.

Request for inspection may be verbal but shall be given in sufficient time to allow the Engineer, or his/her representative, to arrange to be present as required. Failure to notify the Engineer, or his/her representative, of the inspections shall be sufficient ground to reject the uninspected work and cause its immediate removal.

All discrepancies, indicated by the inspector, shall be corrected by the Contractor and re-inspected before the next phase of operation is started. No claim shall be made for delays caused by correction of work found unacceptable to the inspector.

ES-31. WORKMANSHIP AND CLEAN UP

It is the intent and purpose of these Specifications and Plans to obtain good workmanship throughout with the completed work complying with the said Specifications and Plans and in full working order upon completion. Work will not be accepted until this result is obtained.

All debris or rubbish caused by the contractor's operations shall be removed and the areas occupied during such operation shall be left in a neat and presentable condition.

Any damage to private property shall be repaired, replaced in kind, as approved by the City Engineer or the Owner compensated as required by the General Specifications.

Upon the satisfactory completion of all work embraced in the contract and specifications, including the cleanup, together with full compliance with the requirements of the General Specifications the Engineer will, within fifteen (15) days after such completion and compliance, issue a certificate of completion to the Owner with two (2) copies to the Contractor.

ES-32. MOBILIZATION

This item shall consist of preparatory work and operations, including but not limited to, those necessary for the movement of personnel, equipment, supplies and incidentals to the project site; for the establishment of offices, buildings and other facilities necessary for the work on the project; for premiums on bond and insurance for the project; for all other work and operations which must be performed or costs incurred before beginning production work on the various contract items. Mobilization cost for subcontracted work shall be considered to be included in the prices bid by the prime Contractor.

~~The amounts to be allowe~~ Measurement and Payment shall be made in accordance with the ISPWC 2020 Edition ~~be made under the contract will be made as follows:~~

1. ~~Sixty percent of the amount bid for mobilization will be paid on the first monthly progress estimate.~~
2. ~~Forty percent of the amount bid for mobilization will be paid on the second monthly estimate providing that the contractor has initiated productive work on the project.~~

~~Mobilization will be measured and paid for by the Lump Sum as shown on the Contractor's Proposal~~

Measurement and Payment shall be made in accordance with the ISPWC 2020 Edition

AMENDMENTS

Section 3
Amendments

In the case of a conflict between the City of Moscow Standard Drawings/Specifications, 2020 ISPWC Standard Specifications, and the Special Provisions; the most stringent requirement applies.

Where the Plans, Specifications, Standard Drawings, or Special Provisions describe portions of the work in general terms, but not in complete detail; it is understood that the item is to be furnished, installed complete, and installed in place. Only the best general practice is to prevail. Only materials and workmanship of the highest quality are to be used. Unless otherwise specified, the Contractor shall furnish all labor, materials, tools, equipment, and incidentals; and do all the work involved in executing the Contract.

AMENDMENTS TO THE STANDARD SPECIFICATIONS

The following amendments to the Standard Specifications take precedence over the Standard Specifications.

DIVISION 200 – EARTHWORK

Section 201 – Clearing and Grubbing

Part 3 WORKMANSHIP

3.2 REMOVAL OF OBSTRUCTIONS

B. Removal and Disposal

Add the following;

6. Existing traffic signs and posts designated to be removed shall be salvaged and delivered to the City of Moscow.

Add the following;

3.3 REMOVAL AND DISPOSAL OF MATERIALS

A. General

1. Complete the removal to the limits shown on the Contract documents or as directed by the Engineer.
2. Unless otherwise specified, all removed material shall become the responsibility and property of the Contractor.
3. Dispose of unusable material outside the construction limits in an approved location in accordance with all local, state, and federal regulations.

4. Dispose of unusable material in such a manner that no unsightly appearance will result.

5. Copies of the disposal agreement with property owners are to be furnished to the Owner upon request.

B. Protection

1. Locate and protect all live utilities from damage.

2. Protect benchmarks and survey monuments from damage and displacement

3. Exercise care to ensure areas outside the construction limits remain undisturbed.

4. Satisfactorily restore any damage to existing facilities or structures resulting from carelessness or negligence by the Contractor to their original condition at the Contractor's expense.

5. Protect and preserve all existing facilities or structures as noted to be removed and reinstalled or relocated.

C. Removal and disposal

1. Bituminous Pavement shall be removed to clean, straight lines. Edges to be joined shall be saw cut. Where only the surface of existing bituminous pavement is to be removed, the method of removal shall be approved by the Engineer, and a minimum laying depth of 1 inch of new pavement material shall be provided at the join line. Where bituminous pavement adjoins a trench, the edges adjacent to the trench shall be trimmed to neat straight lines before resurfacing to ensure that all areas to be resurfaced are accessible to the rollers used to compact the subgrade of paving materials.

2. Concrete Pavement shall be removed to neatly sawed edges. Saw cuts shall be made to a minimum depth of 1½ inches. If a saw cut in concrete pavement falls within 3 feet of a construction joint, cold joint, expansion joint, or edge, the concrete shall be removed to the joint or edge. The edges of existing concrete pavement adjacent to trenches, where damaged subsequent to saw cutting of the pavement, shall again be saw cut to neat, straight lines for the purpose of removing the damaged pavement areas. Such saw cuts shall be either parallel to the original saw cuts or shall be cut on an angle which departs from the original saw cut not more than 1 inch in each 6 inches.

3. Concrete curb, sidewalk, gutters, driveways, approaches, and other miscellaneous concrete shall be removed to neatly sawed edges with saw cuts made to a minimum depth of 1½ inches. Concrete sidewalk, approaches, and driveways to be removed shall be neatly sawed in straight lines either parallel to the curb or

at right angles to the alignment of the sidewalk. No section to be replaced shall be smaller than 30 inches in either length or width. If the saw cut in sidewalk, approaches, or driveways would fall within 30 inches of a construction joint or edge, the concrete shall be removed to the joint or edge, except that where the saw cut would fall within 12 inches of a score mark, the saw cut shall be made in and along the score mark. Curb and gutter shall be saw cut to a depth of 1½ inches on a neat line at right angles to the curb face.

Section 202 – Excavation & Embankment

Part 3 WORKMANSHIP

3.2 EXCAVATION

Add the following to Paragraph B;

13. Contractor shall be responsible for reviewing the attached Geotechnical Report by GeoProfessional Innovation (GPI) for detailed soil information and recommendations regarding the channel and box culvert construction.

14. Existing asphalt is assumed to be 4" thick. Existing sidewalk is assumed to be 4" thick. The existing asphalt and existing sidewalk is included in the earthwork calculations.

15. If Contractor chooses to re-use existing asphalt, Contractor shall submit an Asphalt Re-Use Plan, including test results from submittal samples that incorporates the above considerations into the proposed construction plan.

3.5 SUBGRADE

Add the following to Paragraph G;

Testing frequency for subgrade shall be 1 test per 750-1000 sf.

3.8 EMBANKMENT CONSTRUCTION

D. Compaction Control Tests

Revise the last sentence of Paragraph 1 to the following;

Testing frequency for subgrade shall be 1 test per 50 cy per lift.

<u>DIVISION 300 – TRENCHING</u>

Section 305 – Pipe Bedding

Part 3 WORKMANSHIP

3.11 BEDDING SYSTEM APPLICATION

Amend to read as follow;

4. Water and Pressure Irrigation: Use bedding in accordance with City standards and specifications for rigid or flexible water and pressure irrigation pipes.

Section 306 – Trench Backfill

Part 3 WORKMANSHIP

3.3 TYPE A TRENCH BACKFILL (A-1, A-2, A-3)

Delete sections B-E and replace with the following;

A. Type A-1 Compaction.

1. Compact in accordance with City standards and specifications
2. Testing and Recompaction:
   a. Provide one compaction test for every 50 cy of back fill material.
   b. Tests shall be located at representative locations in the upper and lower zones, or as directed by the Engineer.
   c. Areas with failing compaction test results shall be recompacted until satisfactory compaction is achieved.
   d. Compaction tests shall be taken after completion of the respective lift. Test pits shall not be used unless approved by the Engineer. Contractor shall bear all cost for excavation of test pits, standby time during testing, any re-testing, backfilling and compaction of test pits.

SECTION 401

WATER PIPE AND FITTINGS

PART 1 GENERAL

Replace Part 1.4.A with the following:

A. Submit shop drawings including accurate dimensions and layout for materials to be installed under this section.

Amend Part 1.4 to include:

D. Product Data: Provide data on pipe materials, pipe fittings, splice kits, valves and all other appurtenances.

Amend Part 1.6 to include:

C. Coated pipe shall be shipped on padded bunks with nylon belt tie down straps or padded banding.

PART 2 MATERIALS

Replace Part 2.2.A.1 with the following:

1. Pressure Class: 235 psi (DR 18), or as indicated in the Contract Documents.

Replace Part 2.2.B.1 with the following:

1. Pressure Class: 235 psi (DR 18), or as indicated in the Contract Documents.

Replace Part 2.2.C.1 to the following:

1. Tyler Ductile Iron Compact Fittings 3 inch through 24 inch: ANSI/AWWA C 153

Replace Part 2.2.C.2 with the following:

2. Tyler Ductile or Gray Iron Fittings: ANSI/AWWA C 110

Replace Part 2.3.A with the following:

A. Ductile Iron Pipe, 3 inch through 64 inch, Centrifugally Cast, for Water: ANSI/AWWA C 151

1. Thickness Class: 51 (minimum)
2. Iron Grade: 60-42-10
3. Lining: Cement mortar and seal coated in accordance with ANSI/AWWA C 104
4. Joints: Push-on unless otherwise noted in the Contract Documents.

5. Gaskets: U.S. Pipe Tyton Joint Pipe or approved equivalent, or Pipes Field LOK 350, or approved equivalent in accordance with ANSI/AWWA C 111

6. Pressure: Minimum working pressure of 350 psi unless otherwise approved by City.

Replace Part 2.3.C with the following:

C. Tyler Ductile Iron Compact Fittings Using Mechanical or Push-on Joints, 3 inch through 24 inch: ANSI/AWWA C 153

Replace Part 2.3.D with the following:

D. Tyler Ductile Iron or Gray Iron Fittings Using Mechanical, Flanged, or Push-on Joints, 3 inch through 24 inches: ANSI/AWWA C 110

Replace Part 2.3.E with the following:

E. Tyler Ductile Iron or Gray Iron Fittings Using Mechanical, Flanged, or Push-on Joints, 30 inch through 48 inches: ANSI/AWWA C 110

Replace Part 2.8.A with the following:

A. Concrete: Per Section 703 – Cast-in-Place Concrete. Minimum compressive strength of 3000 psi.

Amend Part 2.8 to include:

C. For pipes larger than 18” in diameter the thrust block must be designed and stamped by a professional engineer licensed in the state of Idaho at no addition cost to the City. Provide the City with a copy of thrust block design for review and acceptance at least 14 calendar days prior to construction of the thrust block. Thrust block shall not be constructed until the City has reviewed the design.

Replace Part 2.9.B with the following:

B. Product: EBAA iron series 2000 PV (PVC Pipe) or EBAA Iron Series 1100 Megalug (Ductile Iron Pipe) or approved substitution, and to meet requirements of ASTM F 1674. An identification number consisting of year/day/plant/shift to be cast into each gland body from which to trace test results. Gland shall be rated at 350 psi with 2:1 safety factor. Gland shall be fusion epoxy coated, minimum dry film thickness 20 mils.

Replace Part 2.10 with the following:

2.10 LOCATING WIRE

A. For locating wire installation and requirements refer to Section 2060.

Amend Part 2 to include:

2.13 TAPPING SLEEVES

A. ROMAC "SST" Stainless Steel as per ASTM A-240, Type 304 and Type 304L or an approved equal.

2.14 POTABLE WATERLINE CASING

A. Shall be C900 DR25 or higher pressure rated pipe. Casing shall be centered 10-feet on either side of the non-potable crossing, unless shown otherwise.

2.15 WATER LINE UNDER BOX CULVERT INSULATION

A. Rigid foam insulation, extruded polystyrene (xps), R-value of 10 (for 2" thick insulation)

PART 3 WORKMANSHIP

Amend Part 3.1 to include:

H. The Contractor shall not bury any work to be inspected without such inspections taking place. The Contractor shall notify twenty-four (24) hours in advanced and use every number available to contact the Field Inspector. If work is covered without the appropriate inspection, the Contractor will dig and expose any appurtenance which requires inspection at the Contractors expense.

Amend Part 3.2.M to include:

1. All openings in the pipeline shall be closed with watertight expandable type plugs, a push in plug (or pipe section with cap) or cast-iron test plugs at the end of each day's operation. The use of fabric, plastic, a bucket, wood or other similar temporary plugs will not be permitted.

Replace Part 3.2.O with the following:

O. For locating wire and marking tape installation and requirements refer to Section 2060.

Amend Part 3.2 to include:

R. Pipe may deflect a maximum:

1. PVC: 1 degree or 4 inches for 20-foot lay length

2. Ductile Iron Bell and Spigot Joints:

a. 4 -12 inch Nominal Diameter: 5 degrees or 21 inches for 20 foot lay length
b. 12 - 24 inch Nominal Diameter: 3 degrees or 12 inches for 20 foot lay length
3. Ductile Iron Mechanical Joint:

TABLE 401.3.2.R.3 MINIMUM JOINT DEFLECTION MECHANICAL JOINT PIPE	
NOMINAL PIPE SIZE	DEFLECTION
IN.	DEGREES
4	8.18
6	7.07
8	5.21
10	5.21
12	5.21
16	3.35
18	3.00
20	3.00
24	2.23

S. Coupling and compression fitting maximum allowable pipe gap: ½ inch

T. Align new pipe to interface with existing and apply no unusual stress to the pipe. Install pipe to allow for expansion and contraction without stressing pipe or joints.

U. Maintain separation of water main from any sources of contamination discovered in accordance with Idaho Department of Health and Welfare, Division of Environmental Quality Regulations.

V. Joining PVC, Ductile Iron and AC Pipe and Fittings

1. Rubber gasket type fittings:

a. Maximum pipe length: 20 feet

b. Minimum pipe length: 1-1/2 feet

2. Join pipes 4 inches and larger at tees, valves and other fittings using mechanical joints.

    a. Additional joint restraint shall be installed if deemed applicable by the City.

3. Where rubber ring fittings are used, machine pipe ends in accordance with manufacturer recommendations.

4. Install Romac couplings at AC to PVC pipe joints, where tees or elbows are not installed. All valves shall be bolted to tees and crosses where applicable. Valves used with ninety (90) degree elbows shall be bolted to one side of the fitting.

5. See Table 401.3.2.V.5 for mechanical joint fitting bolt torques, unless otherwise specified by the manufacturer.

TABLE 401.3.2.W.3 MECHANICAL JOIN BOLT TORQUE		
JOINT SIZE	BOLT SIZE	TORQUE RANGE
IN.	IN.	FT-LBS
4 - 24	8.18	75 - 90
30 - 36	7.07	100 - 120
42 - 48	5.21	120 - 150

W. Joint Restraint

1. All mechanical joint deflection greater than eleven and one-quarter (11 1/4) degrees shall be physically restrained with a concrete thrust block. Concrete thrust blocks shall be installed in accordance with ISPWC SD-403 and Section 401.3.4.D. For pipes larger than 18" in diameter install thrust blocks according to Section 4.1.2.8.

X. Gasket installation lubricant shall be suitable for use in potable water.

1. It shall be delivered to the job in closed containers and kept clean.

2. Use of other agents not meeting manufacturer specifications is prohibited.

Y. Cutting and Repairing Existing Mains

1. Wholly or partially dewatered mains shall be returned to service after approval and the following requirements are met.

a. Interior pipe and fittings used in repair shall be swabbed or sprayed with a 1 percent hypochlorite solution before installation.

b. Flush immediately after repairs are complete and continue until water is no longer discolored. If valve and hydrant locations permit, flush towards the work location from both directions

c. Collect bacteriological samples after repairs are complete. If flow direction is unknown, sample each side of the repair.

d. If positive bacteriological samples are recorded, the City will evaluate and determine a corrective action. Sample daily until two consecutive negative samples are recorded.

Replace Part 3.4.D with the following:

D. Thrust blocks shall be poured the full depth of the fitting. A minimum 4 mil plastic sheeting shall be between the thrust block and fitting. Fitting shall be double wrapped.

Amend Part 3.4 to include:

G. The concrete shall be poured to a perpendicular undisturbed embankment, see ISPWC SD-403.

H. Thrust blocks must be inspected by the City prior to backfill.

I. Anchor bars shall be ¾ minimum diameter steel rods; coat tie rods with bituminous coating or approved equal. Hook (2" min.) all embedded ends.

Amend Part 3.6 to include:

G. See MSD-400.16 for approved pressure testing method and MSD-400.17 for allowable leak loss table.

Replace Part 3.7A and B with the following

A: For locating wire installation and requirements refer to Section 2060.

Replace Part 3.9.A with the following:

A. Flushing prior to disinfection shall comply with ANSI/AWWA C 651 and MSD-400.15.

Replace Part 3.9.C.2 with the following:

2. Dispose water according to DEQ guidelines and to a location approved by the City. The Contractor shall provide chlorine reducing agents to meet discharge performance requirements.

Amend Part 3.9.D to include:

3. Bacteriological Test Criteria:

a. Minimum 1 test with <1 coliform bacteria

b. Standard plate count <100.

Amend Part 3 to include:

3.12 BLOW OFF ASSEMBLY

A. Installed blow off assemblies in accordance with the Contract Documents and at additional locations required by the City, for the removal of water and sediment. Install blow off assemblies and applicable valve boxes, to finish grade, at all dead-end mains and stubs in excess of five (5), see MSD-400.3.

3.13 ASBESTOS CEMENT (AC) PIPE

A. Cut AC pipe using a manual or hydraulic snapping tool and reduce airborne asbestos particles.

1. Prevent inhalation hazards while working with AC pipe. Always wear respiratory protection during cutting and cleaning of pipe. Airborne asbestos particles are a carcinogen and all employees with potential exposure must be protected per OSHA guidelines.

2. When AC pipe is removed from the trench, it is classified as hazardous waste and must be disposed per hazardous waste guidelines

   a. Using approved asbestos bags, double bag, and send hazardous material to an approved disposal site.

   b. AC pipe shall not be left in the trench and mechanically crushed during backfill and compaction.

B. Tap AC pipe using a tapping tee or sleeve, gate valve and hydraulic tapping machine following conventional methods.

1. Utilize saddles and corp stops a minimum of twenty-four (24) inches apart on center to prevent cracking of the AC main, where two or more domestic taps, two (2”) inches or less in diameter, are made.

2. Where more than one tap four (4”) inches and larger is made, install taps a minimum of five (5’) feet apart, on center, to preserve the structural integrity of the pipe.

3. Remove loose soil under the pipe near a tapping tee or sleeve and replace with concrete to provide a stable bearing surface.

4. Save all coupons from AC pipe tapping give to the inspector for pipe evaluation

5. Do not undercutting the underlying pipe soil.

3.14 STORAGE

A. Seal pipe ends and cover with tarps for long term outdoor pipe storage.

B. Upon delivery, inspect pipes stored longer than 6 months.

1. Pipes failing inspection will be rejected by the City.

2. The supplier shall replace rejected pipe at no expense to the Contractor or City.

Part 4 MEASUREMENT AND PAYMENT

Add the following:

B. Water Service Relocation: Per each for the size as specified. Includes excavation, bedding, backfill, water main tap, saddle, corporation

stop, connection to existing service line, and all appurtenances not itemized in the Bid Schedule.

1. Bid Schedule Payment Reference: 401.4.1.B.1
2. Bid Schedule Description: Water Service Connection, 1”… each (EA)

END OF SECTION

SECTION 402

HYDRAULIC VALVES

PART 1 GENERAL

Amend Part 1.4 to include:

D. Submit product data for all valves and associated parts.

PART 2 MATERIALS

Replace Part 2.2.A with the following:

A. American Flow Control Series 2500 Resilient Seated Gate Valves for Water Supply Service: ANSI/AWWA C 509

Replace Part 2.2.A.3 with the following:

3. Actuator:
   a. Above ground installations to be fitted with a twelve (12) inch diameter handwheel operator.
   b. Below ground installations to be fitted with a two (2) inch operating nut and key.

Remove Part 2.2.A.6

Replace Part 2.3.A with the following:

A. PRATT Groundhog Rubber Seated Butterfly Valves: ANSI/AWWA C 504
   1. Distributer: Mueller Company or otherwise approved by the City.
   2. Class: 150B
   3. Body Type: Flanged, mechanical or push-on joint.
      a. Material: ASTM A-126 Cast Iron
   4. Disk and Seal
      a. 20” and Smaller: ASTM A-126 Cast iron disk
      b. 24” and Larger: ASTM A-536 Ductile iron disk
      c. Seal Type: BUNA-N
   5. Shaft: Stainless steel shaft with o-ring seals
   6. Metallic Mating Seats: Stainless steel or nickel-copper alloy
   7. Packing: Multiple V-type
   8. Actuator
      a. Above ground manual operators: 8” diameter hand wheel.

b. Buried manual operators: 2” square operating nuts and having a minimum of 24 turns between open and closed position. Operators shall be fully gasketed.

1. Operating nut extensions are required to within thirty-six (36) inches below finished grade.

9. Interior and Exterior Coating: Required

Replace Part 2.4.A.4 with the following:

4. Standard Detail: Refer to MSD-400.4.

Replace Part 2.7 with the following:

2.7 VALVE BOXES

A. Tyler 6855 Series

1. Buffalo Style with mud plug

a. 12 inch and Smaller: 2-piece slip-type

b. 12 inch and Larger: 3-piece slip-type

2. Size: Minimum 5-1/4 inch inside diameter, locking style.

3. Material: Cast iron.

4. Adjustment: Adjustable with sufficient length for bury.

5. 5. Cover: Cast iron stamped “Water”.

B. Operating nut extensions are required to within thirty-six (36) inches below finished grade.

1. Extension Material: Coated Steel

Amend Part 2 to include:

2.9 ISOLATION AND BALL VALVES

A. Model: Red-White Valve Model – Figure No. 4880

B. Valve, Body, and Ball Material: Stainless steel

C. Ball Valve Seals: PTFE seals

D. Seat Type: Teflon

E. Steam: Forged Brass and level handle

2.10 FLANGE INSULATING GASKET KIT

A. Manufacturer: Advance Products and Systems

B. Kit: Type E Double insulation sets

C. Insulated Components

1. Gaskets
2. Bolt sleeves
3. Nuts
4. Bolts
5. Washers

2.11 PRESSURE SUSTANINING VALVE

A. Detail: MSD-400.13

2.12 PRESSURE REDUCING VALVE

A. Detail: MSD-400.14

PART 3 WORKMANSHIP

Amend Part 3.2.B to include:

1. Jointing: AWWA C 600.

Replace Part 3.2.D with the following:

D. Install appurtenances according to the following requirements unless otherwise dictated by the Contract Documents.

1. Main line and lateral isolation valve sizes shall match the main size in which they are installed.
2. Isolate stubs and mains:
   a. Gate Valves: Two (2) to ten (10) inches in diameter
   b. Butterfly Valves: Ten (10) inches in diameter and larger
3. Bolt valves designed near fittings with flanged fittings or Foster gland pack adapters.
4. Valve Location:
   a. Install inline valves every two (2) standard city blocks or 600 feet.
   b. Install Valves at:
      1. Main and lateral connections
      2. Fire hydrants
      3. Fire services
   c. Valves and fittings larger that sixteen (16”) inch may require a designed concrete pad for bearing support.
5. Clean flanges and gland packs prior to installation.

6. Valve Boxes

   a. Cut lower section square to grade and adjust top section to match surface elevation.

   b. Replace valve boxes if sections are broken or cracked.

   c. Valve Box Extensions:

      1. Install five (5”) inch diameter cast iron double hub soil pipe cut to the appropriate length.

   d. Turned on valves, clear all debris, and raise valve box to finished grade at completion.

7. Operating Nut

   a. If upon completion, valve operating nut is not easily operated the Contractor shall excavate and adjust the valve box as necessary for smooth operation at no cost to the City.

Part 4 MEASUREMENT AND PAYMENT

SECTION 4.1

Add the following;

B. Manual Air Release Station: Measurement and payment shall be by the each. Work includes full compensation for all materials, labor, and equipment necessary for completing the work and all appurtenances not itemized in the Bid Schedule. If required and not listed in the Bid Schedule, payment shall be considered as incidental to other Bid Items.

   1. Bid Schedule Payment Reference: 402.4.1.B.1

   2. Bid Schedule Description: Manual Air Release Station...each (EA).

END OF SECTION

SECTION 403

HYDRANTS

PART 2 MATERIALS

Replace Part 2.2.A with the following:

A. Waterous "Pacer" or Mueller "Centurion" Low Pressure Dry Barrel Break-flange or Safety-top Fire Hydrants: ANSI/AWWA C 502

Replace Part 2.2.A.2 with the following:

2. Nozzle Configuration: Two 2-1/2 inch hose nozzles and one 4-1/2 inch pumper port with a 5 inch Storz hose nozzle.

   a. Manufacturer shall furnish the Storz nozzle.

   b. A Storz adapters will not be accepted.

Amend Part 2.2.A to include:

8. Operating Nut: Shall open when turned counterclockwise.

Amend Part 2.2 to include:

B. Attached hydrant isolation valves to the tee at the main and restrain piping from the tee to the hydrant flanged fittings, retaining glands (mega lug, etc.) or tie rods.

Replace Part 2.3.A with the following:

A. Hydrants shall be factory painted or painted by the contractor using high quality industrial enamel high intensity red paint above the ground line.

   1. Spray can paint is prohibited.

Replace Part 2.6 with the following:

2.6 CONCRETE THRUST BLOCKS

A. Concrete thrust blocks shall meet the requirement in Section 401.2.8 and ISPWC Standard Drawing 403.

PART 3 WORKMANSHIP

Replace Part 3.2.A with the following:

A. Install valves and appurtenances in accordance with manufacturer's recommendations and Standard Drawing MSD-400.2.

   1. Install hydrants to provide complete accessibility and minimize risk of damage from vehicles or injury to pedestrians.

   2. Clear and maintain a three (3) foot space around the hydrant.

   3. When located behind the curb, set hydrant barrel to face the pumper or hose nozzle cap two (2) feet from the back of the curb.

4. When located in the lawn space between the curb and sidewalk, or between sidewalk and property line, no portion of the hydrant or nozzle cap shall be within twelve (12) inches of the sidewalk.

5. Set all hydrants plumb and nozzles parallel with, or at right angles to the curb, with the pumper nozzle facing the curb.

6. Set hydrant with safety flange a minimum three (3) inches and maximum six (6) inches above finished ground or sidewalk level to clear bolts and nuts, and as directed.

7. Behind the hydrant:

    a. The ground surface shall be a minimum 4.5 feet above the hydrant base for a minimum 10 feet behind the back of the hydrant.

    b. The City may approve a lesser bury requirement if thrust ties consist of two ¾ inch coated steel tie rods connecting the hydrant to the valve and the main.

8. Sides of the Hydrant:

    a. The ground surface shall be a minimum 4.5 feet above the hydrant base for six (6) feet from the center line of the hydrant barrel.

9. Front of the Hydrant:

    a. The ground surface shall be a minimum four (4) feet over the hydrant lateral pipe.

Amend Part 3.2 to include:

H. The Contractor is responsible for trench backfill, water main taps, and street patching in accordance with the ISPWC. City shall inspect and approve of the water main connection prior to backfilling. City shall be given a minimum 48-hour notice to when watermain connection will occur and shall have 48-hours to complete inspection of the connection.

I. All fire hydrants and waterlines to the fire hydrants become the City of Moscow's once installed. Twenty foot (20') wide public utility easements countered on and around the fire hydrant and the waterline to the fire hydrant shall be granted to the City.

J. Install guard posts, or equivalent, where hydrants are subject to impact by motor vehicles.

K. Disconnect improperly located hydrants at the Contractor's expense.

L. Replace over-excavated areas with gravel, and hand tamp to provide a unyielding foundation.

M. Place base block on firm level sub-base for uniform support.

N. Prevent damage to base block during hydrant installation.

O. Place temporary blocks to maintain hydrant in a plumb position during subsequent work.

P. All earthen fill shall be compacted full depth to a minimum 95% of AASHTO T-180 proctor value.

END OF SECTION

SECTION 404

WATER SERVICE LINE AND METERS

PART 2 MATERIALS

Replace Part 2.2.A.1 with the following:

1. Pressure Class: 250 psi

Replace Part 2.2.A.4 with the following:

4. Standard Code Designation: ASTM D2239 SIDR-7 & PE4710

Replace Part 2.4.A with the following:

A. Service Saddles/Tapping Sleeves

1. Two (2) inch Taps or less : Romac 202S, or approved substitution.

    a. Line and coat iron saddle bodies with fusion-bonded epoxy, nylon, or approved substitution. Line or coat per manufacturer's specification.

2. Three (3) inch Taps and Larger:

    a. Require approved tapping sleeve and gate valve for installation with existing mains.

    b. Ductile iron tees with gate valves for main size eight (8") inch or less, or butterfly valves for main size twelve (12") or larger, may be used in new construction.

    c. Type: Minimum full wrap stainless steel or other approved material.

    d. Tapping sleeve shall fully support the body of the tapped main, eliminating leakage.

    e. Installed and torque to the manufacturer's specifications and instructions.

    f. The test plug shall be in the upper portion of the saddle for sleeve testing.

    g. The site inspector shall determine pressure testing requirements at the time of installation.

    h. Retrieved coupon from the tap immediately after removal for City documentation.

    i. Swab the tapping saddle, sleeve, and gate valve with an appropriate strength solution of hypochlorite disinfectant.

Amend Part 2.4.B to include:

4. Body: Brass
5. Style: Ballcorp
6. Pack Joint Inserts: Stainless steel
7. Tape Size: One (1) and two (2) inch

Replace Part 2.4.D with the following:

D. One (1) and Two (2) inch Meter Setters: Standard Detail MSD-400.1 & 400.11

Amend Part 2.4.D to include:

6. Incorporate bypass valve in the two (2) inch meter setter base.
7. Install a minimum four (4) inch by twelve (12) inch 3034 PVC sleeve over the top of the bypass valve with a saddle cut for service key access.
8. Install a minimum one (1) foot stub of brass pipe for 1” Copper Setter or minimum one (1) foot stub of brass pipe for 2” Copper Setter and PVC cap extending from the base of the copper setter on the customer side of the setter, to provide stability. If the development utilizes a green strip and the water meter is to be installed on private property side of the green strip sidewalk, stub is to be polyethylene pipe (PEP) installed through a 2” minimum diameter conduit installed 2’ from the front of sidewalk to 2’ behind back of sidewalk.
9. The copper setter shall be plumb and level.
10. The service shall match the copper setter size.
11. Meters three (3) inches and Larger: Standard Drawing 400.14
    a. Install meters in approved Wilbert 1914 series vaults with outside stem and yoke (OS & Y) gate valves on both sides of the meter and appropriate companion flange connections.
    b. Minimum three (3”) inch meter Tap Size: Four (4”) inch.
        1. Four (4”) inch pipe shall be extended into and from the customer side of the meter vault.
        2. Reductions shall be made inside the vault.

Replace Part 2.4.F.1 with the following:

1. For locating wire installation and requirements refer to Section 2060.

Replace Part 2.4.G with the following:

G. Meter Box/Vault:

1. Manufacturer: Armorcast or approved equal
2. Material: Polymer
3. 5/8” and One (1) inch Meters:
    a. Size: 17 x 30 x 12 inches
4. 1-1/2” and Two (2) inch Meters:
    a. Size: 24 x 36 x 12 inches
5. Box Sections
    a. Two Risers
    b. Top Section
    c. Lid:
        1. Material: Traffic rated cast iron
        2. Precast Orion radio read hole.
6. Three (3) inch Meters and larger: MSD-400.12
    a. Vault: Wilbert 1914 series or approved equal.

PART 3 WORKMANSHIP

Amend Part 3.2.B to include:

1. Pipe and fittings from the water main to the curb stop, will be supplied by the contractor. Existing water mains shall be tapped by the Contractor. City shall inspect and approve of the connection prior to backfilling. City shall be given a minimum 48-hour notice to when watermain connection will occur and shall have 48 hours to complete inspection of the connection.
2. Meter boxes and service laterals are not permitted in driveway areas or areas where routine vehicle traffic is present.
3. A minimum of one service lateral installation is required for each individual building.
4. Each building shall have an individual service where multiple inhabitable buildings are within a single lot, unless otherwise dictated by the City.
5. Terminate service laterals with a standard copper meter setter with a service size of up to two (2) inches:
    a. Set meter center at eighteen (18) inches below finished grade.

b. Install an approved meter box.

c. Install a minimum one (1) foot stub of brass pipe for 1" Copper Setter or minimum one (1) foot stub of brass pipe for 2" Copper Setter and PVC cap extending from the base of the copper setter on the customer side of the setter, to provide stability. If the development utilizes a green strip and the water meter is to be installed on private property side of the green strip sidewalk, stub is to be polyethylene pipe (PEP) installed through a 2" minimum diameter conduit installed 2' from the front of sidewalk to 2' behind back of sidewalk per City of Moscow Standard Dwg 29.

d. Three (3) inch and larger meter settings shall be installed in an approved 1914 series Wilbert or equal water meter vault of the appropriate size to accommodate the necessary equipment.

6. Location and Marking the Stub Ends

a. Service lateral location:

1. A minimum of two and one-half (2.5) feet left or right of the lot property line.

2. A minimum five (5) feet between service laterals where no power, gas or other utility is allowed to be placed on the property line between the service laterals, and at right angles to the center of the right-of-way, with a minimum of ten (10') feet between the water and sewer laterals.

3. Where the service laterals are separated by other utilities, the service lateral shall be a minimum of six (6) feet from the property line to the service lateral.

4. Water service laterals shall not be connected to existing water main or larger fire service laterals that were originally intended for larger use, water main distribution stubs, or fire main/service stubs.

5. Services for each lot shall be located within the property lines of the respective lot facing the street where the supply main is located.

b. Meter location:

1. Where concrete or machine formed asphaltic concrete curbs exist or are to be constructed, the meter box shall be a minimum six (6) inches back from the curb.

c. The customer end of lateral stubs of any kind extending into private property for customer connection, shall be marked with a minimum two by four (2 x 4) inch board extending a minimum of two (2) feet above finished grade.

1. The exposed portion of the board shall be painted blue to indicate water service.

7. Size

a. The specific size of domestic, irrigation and fire service laterals shall be limited to the installation of various lengths of 5/8 inch, one (1”) inch, 1-1/2 inch, two (2”) inch, four (4”) inch, six (6”) inch, and eight (8”) inch services.

b. Standard Residential Minimum Lateral Size: 1 inch

1. Other lateral sizes shall be approved by the City.

2. All service laterals shall remain a consistent size from the main tap to and through the meter box or vault, extending with a minimum two (2) foot stub out of the customer side.

3. Reductions in size shall only be allowed inside the meter vault at the water meter.

c. Dead end mains and service stubs four (4) inches and larger, in excess of five (5) feet in length, shall have a blow off assembly installed with applicable valve boxes to finished grade.

1. Dead end mains designed for subdivisions will have a control valve equivalent to the size of the water main within 20 feet of the blow off so future installation does not affect existing customers.

8. Multiple Unit Service Line Construction

a. Service lines to large structures with multiple single family living units sharing the same base address, such as apartments or condominiums requesting individual metering per unit, and where the meters are desired in one location only, shall be installed to correlate from left to right in a numbered sequence (from 1, 2, 3, 4, 5, 6, etc.). If this cannot be properly done, the structure shall be metered with a single meter and an owner’s association shall be established to manage the applicable fees, or the meters shall be installed directly in front of each unit, where applicable.

9. New Service Installations

a. Where the Contractor installs new mains and/or services, for new residential construction, the one (1) inch and two

(2) inch service laterals shall be laid straight to the new copper setter with a brass stub extended a minimum one (1) feet beyond the copper setter with a PVC cap to the lot it will serve.

b. The customer shall connect to the stub with an approved pack joint fitting or threaded brass coupling.

c. The Contractor may provide a longer extension from the copper setter for the provision of other utilities directly behind the meter box.

d. The customer connection at the end of the stub must be inspected by the City prior to burial.

10. Fire Service

a. Install under the same conditions as standard supply services with the exception that they will not be metered.

1. Standard fire services shall be a minimum of two (2) inches.

2. An additional isolation valve, for two (2) inch residential service curb stop or larger commercial service, may be required at the property line for service control per the City.

b. All fire services four (4) inches and larger shall have a control gate valve at the main tap in the street/r-o-w/easement.

c. The proper backflow protection is also required on fire services dependent on a Fire Department Connection (FDC).

d. Fire services shall be separate stubs from the domestic and irrigation supply lines.

e. Complete fire service installations shall utilize approved backflow devices to isolate the fire service from the potable water supply to prevent contamination.

f. All installed backflow devices shall be tested upon installation and annually thereafter with the results sent to the City.

11. Service for Reconstruction Projects

a. Reconnection of existing customer service laterals for water main replacement projects.

1. Shall be installed from the new main to a minimum of two (2) feet behind the existing meter box if not already meeting current specifications.

2. The service lateral replacement will include a new meter box and copper setter to meet current standards.

3. The new service shall be placed along side of the existing service prior to testing of the new main.

4. The new service shall be connected to the customer side of the old meter setting after the new main and service lateral is tested and approved for operation.

5. The old meter setting shall then be removed, labeled or tagged with the original service address for later reference and the meter given to the City.

6. The existing service will be abandoned to the old main, see MSD-400.18, MSD-400.19, and MSD-400.20.

7. All connections shall be inspected prior to backfilling.

12. Service Line Replacement/Additional Services

a. Service line replacement to existing lots or where a customer has requested an additional service installation shall require the customer choose the exact location of the meter box installation.

b. The service line replacement shall be 5/8 inch, one (1) inch, 1-1/2 inch, or two (2) inch in size.

c. The laterals will be laid as straight as possible from the water main to the meter box for locating purposes and will include a minimum one (1) foot stub on the customer side of the meter.

d. All replacement and new service lateral installations shall be inspected from the water main to the meter box by the City.

13. Water Meter Installation

a. New water meter settings shall include an approved copper setter with the appropriate angle stop and customer side check valves.

b. The one (1) inch and smaller meters shall be attached in the proper orientation (arrow cast in body pointing toward the building) by use of the threaded female meter spuds provided with the copper setter.

c. Any existing meter settings that currently do not have an approved copper setter, shall provide adequate meter spuds to accommodate the Badger meter.

d. If meter spuds are not provided, the meter setting shall be reconstructed with the appropriate copper setter or have the proper meter spuds installed.

e. All installations shall require approved meter gaskets for a drip tight seal.

f. Meters one and one half (1-½) inches and larger shall be secured by the use of bolted flanges, zinc plated grade five or better steel bolts and nuts, either provided with the two (2) inch copper setter or by plumbed companion flanges when using three (3) inch or larger meters.

g. An approved flange gasket shall be included to provide a drip tight connection with the appropriately sized zinc plated steel bolts and nuts.

14. Irrigation Meters and Connections: MSD-400.9 and MSD-400.11

a. New commercial properties shall be required to stub an additional irrigation meter service per individual saleable lot for possible reduction of sewer fees.

b. Irrigation services shall be installed to domestic service standards complete with copper setters and galvanized stubs.

c. Irrigation services be installed per saleable lot in multifamily developments.

d. Where connections for a new irrigation system are made on residential domestic services, the Contractor/customer shall make all new irrigation connections a minimum of two (2) feet past the bottom of the meter box on the customer service line going to the building.

e. No connections of any kind shall be accepted inside, under or in front of the meter box.

f. It shall be the Contractor's and/or customer's responsibility to read and understand all standards and specifications regarding irrigation system installation.

15. Locating Wire

a. For locating wire installation and requirements refer to Section 2060.

16. Cut Services

    a. When existing services are accidentally or intentionally cut between the meter and the main, the City shall determine, regarding the type and condition of the existing service, as to whether the entire lateral must be replaced.

    b. Service line repairs of polyethylene pipe with pack joint compression couplings shall be allowed only upon the approval of the City for existing services.

    c. Galvanized service lines shall be replaced from the curb stop to the copper setter unless otherwise directed by the City.

17. Customer Connection

    a. The Contractor/customer shall be responsible for connecting to the end of the brass stub of the meter setter.

    b. The customer shall use an approved pack joint fitting or threaded brass coupling to couple the corresponding size of polyethylene pipe to the brass stub.

    c. An irrigation style barbed connector and geared clamps will not be acceptable.

    d. The customer shall assume ownership of the service line from the bottom of the meter box to and inside the structure being served.

18. Service Shutdown

    a. Whenever it is necessary to shut down any service(s), the Contractor shall notify all affected customers with a written notice at least forty-eight (48) hours prior to the shutdown.

        1. Notices shall be provided to City Hall, the Water Department Office, and the Fire Department seventy-two (72) hours prior to shut down.

        2. If the shutdown occurs on a Monday, the affected services shall be notified in writing the preceding Friday.

        3. If requested by the Contractor, the City may provide the Contractor with a formal letter to use as an official notice.

        4. The Contractor shall provide verification to the City that every attempt has been made to contact everyone affected.

b. If an emergency shut down is required for any reason, the Contractor shall make every effort to immediately notify the Water Department at (208) 882-3122 first and then the affected customers of the incident and expected duration of the shutdown.

END OF SECTION

SECTION 405

NON-POTABLE WATER LINE SEPARATION

PART 3 WORKMANSHIP

Amend Part 3.3 to include:

D. Asphalt Concrete Main Replacement Crossing see MSD-400.5.

Amend Part 3 to include:

3.4 Casing for PVC and Ductile Iron Pipe

A. Where necessary, install pipe in casing sizes as indicated in Table 405.3.4.A.2 with approved wall thickness and the appropriate casing insulators.

1. The Contractor shall only install approved insulators as specified in the Contract Documents.

2. Casing wall thickness shall be determined dependent on the installation application. Wall thickness may be greater for unconfined soil placements or extreme traffic loading. The Project Engineer shall review all applicable regulations and construction standards prior to specifying the type and wall thickness of the casing to be used on the project.

TABLE 405.3.4.A.2 CASING	
NOMINAL PIPE SIZE	CASING SIZE
IN.	IN.
4	8
6	12
8	16
10	18
12	20
14	24
16	26
18	32
24	36

3. If steel casing is used, it shall have a minimum thickness of ¼ inch.

B. Steel Casing Seals and Insulators

1. Casing insulators shall be used to electrically isolate the casing pipe from the water main.

2. Insulators shall be equipped with heavy duty fusion bonded epoxy coated stainless steel spacers.

a. Minimum Width: Twelve (12) inches width,

b. Glass Reinforced Runner Width: Two (2) inches

1. Minimum of two (2) inch bottom runners and two (2) inch top runners for four (4) inch to twelve (12) inch pipe,

2. Minimum four (4) inch runners at the bottom and two (2) inch runners at the top for fourteen (14) to thirty-six (36) inch pipe.

C. Closure of Pipe Casing

1. Ends of casing shall not be closed and material shall not be installed inside casing until after pressure testing is complete and approved by the City.

2. After pressure testing, casing ends shall be sealed.

3. Closure shall be by manufactured boot, grouting, or insulating foam as approved by the City.

Part 4 MEASUREMENT AND PAYMENT

4.1 Remove and Replace Section 4.1 with the Following

Add the following.

4.1 Use the following unit price as designated on the Bid Schedule. If required and not listed in the Bid Schedule, the following Bid Items are to be considered incidental to other Bid Items

A. Potable Water Line Casing – Size ___, Type ___: By the linear foot for the size and type of pipe measured along the horizontal centerline of the pipe. Includes all labor, materials, and equipment necessary to complete the work. Carrier pipe is paid for separately.

1. Bid Schedule Payment Reference: 405.4.1.A.1

2. Bid Schedule Description: Potable Water Line Casing – Size ___, Type ___… linear foot (LF)

END OF SECTION

ISPWC – DIVISION 400

WATER – STANDARD DRAWINGS

REMOVE THE FOLLOWING ISPWC STANDARD DRAWINGS:

REPLACE THE FOLLOWING ISPWC STANDARD DRAWINGS:

ISPWC SD-401 AND SD-402 WITH MSD-400.1, MSD-400.9, AND MSD-400.12.

ISPWC SD-404 WITH MSD-400.2.

ISPWC SD-405 WITH MSD-400.3.

ISPWC SD-406 WITH MSD-400.7 AND MSD-400.8.

ISPWC SD-408 AND SD-408A WITH MSD-400.4.

ADD THE FOLLOWING CITY OF MOSCOW STANDARD DRAWINGS:

MSD-400.5 – APPROVED A.C MAIN REPLACEMED CROSSING.

MSD-400.10 – 3” & LARGER DOM. METER VAULT SET.

MSD-400.11 – 3” AND LARGER SERVICE SETTING IRRIGATION VAULT.

MSD-400.13 – 18 PRESSURE SUSTAINING VALVE ASSEMBLY.

MSD-400.14 – PRESSURE REDUCING STATION ASSEMBLY.

MSD-400.15 – WATER MAIN FLUSHING CHART.

MSD-400.16 – APPROVED PRESURE TESTING METHOD.

MSD-400.17 – ALLOWABLE LEAK LOSS TALBE.

MSD-400.18 – SERVICE ABANDONED AT CORP STOP – IPS & PJ.

MSD-400.19 – SERVICE ABANDONED AT CORP STOP – COPPER.

MSD-400.20 – ABANDONING AC PIPE DIRECT TAP CORP STOP.

AMMEND THE FOLLOWING ISPWC STANDARD DRAWINGS:

ISPWC SD-403 LEGEND 3 TO THE FOLLOWING: 3: NO. 12 COPPER FINDER WIRE. SEE CITY OF MOSCOW SD-XXX FOR SPLICING.

ISPWC SD-403 LEGEND 6 TO THE FOLLOWING: 6. PRECAST BLOCK FOR CUT IN TEE AND VALVE OR CAST IN PLACE WITH 2 ½” Ø MIN. BARS SHALL HAVE A BITUMINOUS COATING OR APPROVED EQUAL.

ISPWC SD-403 LEGEND 11 TO THE FOLLOWING: 11. ANCHOR BARS SHALL BE ¾" MINIMUM DIAMETER STEEL RODS; COAT TIE RODS WITH BITUMINOUS COATING OR APPROVED EQUAL. HOOK (2" MIN.) ALL EMBEDDED ENDS.

ISPWC SD-403 NOTE D TO THE FOLLOWING: D. ALL CONCRETE TO BE 3000 PSI STRENGTH POURED AGAINST UNDISTRVED EARTH.

ISPWC SD-403 NOTE E TO THE FOLLOWING: E. THRUST BLOCKS SHALL BE POURED THE FULL DEPTH OF THE FITTING. A MINIMUM 4 MIL PLASTIC SHEETING SHALL BE BETWEEN THE THRUST BLOCK AND FITTING. FITTING SHALL BE DOUBLE WRAPPED.

ISPWC SD-403 *** TO THE FOLLOWING: *** THRUST BLOCK DEPTH TO BE A MIMINUM OF 12" FOR PIPE SIZES 3"-8" AND 18" FOR PIPE SIZES 10"-18" OR THE SQUARE ROOT OF THE REQUIRED BEARING AREA, WHICHEVER IS GREATER. THRUCK BLOCKS FOF PIPES LARGER THAN 18" MUST BE ENGINEERED AND STAMPED BY A LICENSED ENGINEER IN THE STATE OF IDAHO.

DIVISION 500 – SEWER

Section 501 – Gravity Sewers

Part 2 MATERIALS

2.3 COUPLINGS FOR DISSIMILAR PIPE OR TWO PLAIN ENDS OF SIMILAR PIPE

Delete paragraphs A through D and replace with the following;

A. Couplings shall provide for a watertight connection and a smooth pipe invert. Couplings shall be manufactured by Romac Industries or as approved by the City.

Add the following;

2.5 CASING FOR SEWER PIPE

A. Use materials for the installation of the casing and carrier pipe in accordance with the applicable sections of Section 308 – Boring and Jacking.

B. Steel Casing Pipe: Conform to ASTM A252 with ½-inch minimum wall thickness.

Part 3 WORKMANSHIP

Add the following;

3.5 CASING FOR SEWER PIPE

A. Install casing and carrier pipe in accordance with the applicable sections of Section 308 – Boring and Jacking.

Section 507 – Sanitary Sewer Open Cut Repair/Rehabilitation

Part 4 MEASUREMENT AND PAYMENT

4.1

Add the following;

H. Manhole removal includes all labor, materials to complete the remove and replace with new pipe.

DIVISION 600 – CULVERTS, STORM DRAINS, AND GRAVITY IRRIGATION

Section 601 – Culvert, Storm Drain, and Gravity Irrigation Pipe

Part 2 MATERIALS

2.3 COUPLINGS FOR DISSIMILAR PIPE OR TOW PLAIN ENDS OF SIMILAR PIPE.

Delete paragraphs A and B and replace with the following;

A. Couplings shall provide for a watertight connection and a consistent pipe invert.

Section 602 – Storm Drain Inlets, Catch Basins, Manholes, and Gravity Irrigation Structures

Part 2 MATERIALS

2.5 GRADE RINGS, FRAMES, GRATES AND COVERS

Amend paragraph A as follows;

A. Provide size and shape detailed in the Standard Drawings unless otherwise specified in the Contract Documents.

DIVISION 700 – CONCRETE

Section 704 – Precast Concrete

Part 3 WORKMANSHIP

Add the following;

3.7 AGGREGATE

A. Provide aggregate as required for a stable base, backfill, drainage, etc. in accordance with Manufacturer's recommendations.

Part 4 MEASUREMENT AND PAVEMENT`

4.1

Add the following;

In addition to the items listed in Section 704.4.1, measurement and payment for these items includes all labor, materials and equipment necessary to complete the work, including excavation and backfill.

Section 706 – Other Concrete Construction

Part 4 MEASUREMENT AND PAVEMENT

4.1

H**. Amend section as follows;**

Pedestrian Ramp w/ Detectable Warning Domes: By the Square Yard.

1. Bid Schedule Payment Reference: 706.4.1.H.1.
2. Bid Schedule Description: Pedestrian Ramp w/ Detectable Warning Domes… Square Yard (SY)

<u>DIVISION 800 – AGGREGATES AND ASPHALT</u>

Section 802 – Crushed Aggregates

Part 4 MEASUREMENT AND PAYMENT

Include the following in Paragraph 1:

Measurement and payment for "Crushed Aggregate for Base" shall include the installation and compaction of the crushed aggregate required, as per the approved plans, for all curb types, sidewalk, concrete and gravel driveways, pedestrian ramps, and concrete and asphalt pavement areas.

Section 803 – Plant Mix Aggregates

Part 2 MATERIALS

2.2 PLANT MIX AGGREGATE GRADATION

Delete sections A – C and replace with the following;

The aggregate shall comply with the criteria in Section 703.05 of Idaho Department of Transportation Standard Specification for Highway Construction, and Supplementals.

Section 805 – Asphalt

Part 2 MATERIALS

Replace Part 2 MATERIALS in its entirety with the following;

The asphalt shall comply with the criteria in Section 702 of Idaho Department of Transportation Standard Specification for Highway Construction, and Supplementals.

Section 810 – Plant Mix Paving

Replace Section 810 in its entirety with the following

Part 1 GENERAL

1.1 SECTION INCLUDES

A. This work consists of constructing one or more courses of Superpave Hot Mix Asphalt (HMA) in accordance with these specifications, Section 405 of the ITD Standard Specifications, and in reasonably close conformity with the lines, grades, thicknesses, and typical cross sections shown on the plans or in the Contract Documents.

1.2 RELATED SECTIONS

A. Section 706 – Other Concrete Construction

B. Section 802 – Crushed Aggregate

1.3 REFERENCES

A. Idaho Standards for Public Works Construction (ISPWC), most recent edition as of the first advertising date.

B. Idaho Transportation Department, Standard Specifications for Highway Construction, most recent edition as of the first advertising date.

C. Idaho Transportation Department, Supplemental Specifications, most recent edition as of the first advertising date.

D. Idaho Transportation Department, Standard Quality Assurance Special Provision, most recent edition as of the first advertising date.

E. Western Alliance for Quality Transportation Construction (WAQTC), most current edition as of the first advertising date.

F. AASHTO Standard Specifications for Transportation and Methods of Sampling and Testing, most current edition as of the first advertising date.

1.4 DEFINITIONS

A. "ITD Specifications" is defined as the Idaho Transportation Department, Standard Specifications for Highway Construction, most recent edition and the Idaho Transportation Department, Supplemental Specifications, most recent edition.

Part 2 MATERIALS

2.1 JOB MIX FORMULA

A. The Contractor shall furnish a job mix formula (JMF) for a Superpave HMA pavement that complies with Superpave mixture requirements per ITD Specifications Section 405-Superpave Hot Mix Asphalt, Subsection 405.02 Materials, Table 1 – Superpave Mixture Requirements. The mix shall be the class of Superpave and have the maximum aggregate size stated in the Measurement and Payment Section. The job mix shall be 1) previously tested and approved by the Idaho Transportation Department or 2) prepared by an Accredited Superpave Mix Design Technician and stamped by an Engineer licensed in the State of Idaho.

B. Submit mix design documentation and paving plan for review a minimum of seven (7) days prior to commencement of work. Production paving shall not begin until the Engineer has found no exception with the Contractor's Job Mix. Paving plan shall include, but is not limited to, the following: number of crews, number of trucks, progression of work, haul route, joint layout, quality control, and roller pattern.

C. The Contractor shall use an Idaho Transportation Department approved aggregate commercial source.

D. An acceptance test strip and test strip sampling is not required.

2.2 AGGREGATES

A. The aggregate shall comply with criteria in the ITD Specifications Section 703- Aggregates, Subsection 703.05 Aggregate for Superpave HMA Pavement.

B. The Superpave HMA Pavement mix design shall utilize either ½-inch or ¾-inch nominal maximum aggregate size, as stated in the Measurement and Payment.

2.3 RECYCLED ASPHALT PAVEMENT (RAP)

A. Only Category 1 RAP, as defined in ITD Specifications Section 405-Superpave Hot Mix Asphalt, Subsection 405.02 Materials, will be permitted.

B. In mix designs where the RAP percentage exceeds 17%, a binder grade adjustment per ITD Specifications Section 405-Superpave Hot Mix Asphalt, Subsection 405.02 Materials is required.

C. The percentage of RAP shall not exceed 30%.

2.4 ASPHALT

A. Asphalt per Idaho ITD Specifications Section 702.01 Asphalt.

2.5 ANTI-STRIPPING ADDITIVE

A. All Superpave HMA designs shall use a minimum one-half percent approved liquid anti-stripping additive by weight of asphalt. Lime may be used as the anti-stripping additive, if it was included in the job mix design.

2.6 TACK

A. Tack shall be diluted slow breaking asphalt emulsion CSS-1, STE-1, or approved equal.

Part 3 WORKMANSHIP

3.1 EXAMINATION

A. Verify that saw cut edges are straight and vertical. If additional saw cutting is required to achieve this condition, the Contractor shall do so at no additional cost to the Owner.

B. If paving on base aggregate, verify that the areas are graded, compacted, and ready to support paving and imposed loads. Fine grading, as required, shall be accomplished immediately prior to paving. Base course shall be approved by the Owner prior to paving.

C. Apply a thin, uniform asphalt tack coat to the surfaces of curbing, gutters, manholes, asphalt cement pavement, Portland cement pavement, and other structure pavement that abut the new pavement in accordance with ITD Specifications Section 401.

D. If paving on existing asphalt surface, verify that the surface is clean and a tack coat has been applied in accordance with ITD Specifications Section 401.

E. Verify utility valve boxes, vaults, manholes, or other appurtenances in the road surface are adjusted to the appropriate grade.

3.2 HAULING AND PLACING ASPHALT

A. Paving equipment and trucks shall be in accordance with ITD Specifications Section 405.

B. Install work in accordance with ITD Specification 405.

C. Stage the delivery of material and speed of the paver so that the paver stops only for unusual circumstances.

D. To prevent adhesion of mixture, keep roller wheels moistened with water. Do not use fuel or other petroleum-based oil as a release agent.

E. In areas inaccessible to rollers, use mechanical tampers or other approved compactors.

F. Place cold longitudinal joint at the centerline of the roadway for the top course of plant mix, unless otherwise approved. For lower courses, stagger cold joint and offset 6 inch to 1 foot from the centerline of the roadway. A joint is considered a cold joint when the temperature of the previously laid material has cooled to 175°F or less.

G. Contractor shall employ personnel and supply testing to provide quality control during paving. The Owner's Representative will not be available to assist in the Contractor's quality control.

3.3 WEATHER LIMITATION

A. Do not place Superpave HMA against any wet or frozen surfaces, nor use frozen aggregates in the mix.

B. Do not place Superpave HMA when weather or surface conditions otherwise prevent the proper handling or finishing of the plant mix material.

C. Do not start existing asphalt removal or otherwise alter the surface of existing asphalt surface unless the progress schedule realistically shows that the pavement can be replaced or completed.

D. The available schedule set forth in Contract Documents does not alleviate the Contractor's responsibility to complete paving within the environmental requirements.

E. Place Superpave HMA only when the air and surface temperature are in accordance with Table 1 and rising, unless otherwise approved by the Owner. Both air and surface must conform to the following minimum temperatures for all plant mix pavement operations.

Table 1

Air and Surface Temperature Limitations

Compacted Thickness of Individual Courses	Top Course	Leveling and Courses Below the Top Course
Less than 1 inch	60° F	50° F
1 inch to 2 inches	50° F	40° F
Over 2 inches	40° F	40° F

3.4 PAVEMENT SURFACE SMOOTHNESS

A. Straight-Edge Requirements

1. Straight edge to be an approved device 10 feet in length.
2. Perform straight edge test in areas to be determined by Engineer and randomly along the project length.
3. When straight edge is laid on the finished surface in a direction parallel or perpendicular to the centerline and the surface variation exceeds 0.25 inch from the lower edge over the length of the straight edge, asphalt shall be removed and replaced, unless otherwise approved by the Owner.

B. Corrective Action

1. When the requirements for smoothness are not met as defined above, asphalt shall be removed and replaced, at no expense to the Owner, unless otherwise approved by the Owner.

3.5 QUALITY ANALYSIS

A. For SP-2 mixes, the Contractor shall test the Plant Mix Aggregate Gradation and Asphalt Binder Content using WAQTC certified staff and provide the Engineer with results within 24 hours.

B. For SP-3 and SP-4 mixes, the Contractor shall test Air Voids at N_{des} and voids in mineral aggregate (VMA) at N_{des} using WAQTC certified staff and provide the Engineer with results within 24 hours.

C. Quality Characteristic Limits: The upper and lower specification limits for Superpave quality characteristics will be set by Table 2.

Table 2

Quality Characteristic Limits

Quality Characteristic	Limits				
SP 1 and SP 2 mixtures					
No.4 (4.75 mm) sieve and larger sieves, %	C-JMF value ± 5.0				
No. 8 (2.36 mm) to No. 30 (0.60 mm) sieves, %	C-JMF value ± 4.0				
No. 50 (0.30 mm) to No. 100 (0.15 mm) sieves, %	C-JMF value ± 3.0				
No. 200 (0.075 mm) sieve and smaller sieves, %	C-JMF value ± 1.5				
Asphalt Binder Content, %	C-JMF value ± 0.3				
SP 3 – SP4 mixtures					
Laboratory Air Voids, % N_{design}	4.0 ± 1.0				
Minimum VMA, % at N_{design}	Nominal Max. Aggregate Size				
	1 ½"	1 "	¾"	½"	3/8"
	11.0	12.0	13.0	14.0	15.0

❖ *JMF = Job Mix Formula*

D. Minimum testing requirements are as follows: For SP2 mixes: one (1) test per each day of production paving. No pay factor analysis is required. For SP3/SP4 mixes: One (1) test per each day of mainline production paving, one (1) test per every 750 Tons of mainline production paving, or a minimum of three (3) tests total on the project, whichever is greater. For acceptance and pay factor analysis, a lot is defined as a minimum of three (3) tests.

E. The Contractor shall run a Rice Gravity test in accordance with AASHTO TP-68 each day of mainline paving and provide the Engineer with results within 24 hours.

F. Asphalt that falls outside the quality acceptance limits shall be removed and replaced at no additional expense to Owner unless otherwise approved by Owner.

3.6 COMPACTION TESTING OF ASPHALT FOR ACCEPTANCE

For SP2 Mixes:

A. Acceptance of Superpave HMA density will be based on the results from a correlated nuclear densitometer. Provide results to Engineer within 24 hours.

B. The pavement shall be compacted to a density corresponding to a range equal to and between 91.0 percent and 96.0 percent of maximum theoretical density based on the day's Rice Gravity results.

For SP3/SP4 Mixes:

A. Acceptance of Superpave HMA density will be based on the density of cores taken from the finished pavement. The Contractor shall obtain a minimum of five (5) randomly located core samples from the compacted Superpave HMA or one core per every 750 tons, whichever is greater. Random core locations will be determined by

the Engineer. The cores for acceptance will be spaced along the project length including each paved mainline lane and each lift.

B. The Contractor shall, at their expense, have the asphalt cored in accordance with WAQTC-TM-11. Coring shall be observed by the Owner's Representative and shall be immediately submitted to an independent lab for testing by Contractor at Contractor's Expense. Density of the cores shall be determined according to AASHTO T 166, Method A or AASHTO T 331.

C. The Contractor shall repair all holes left in the pavement surface by the coring operation at no additional cost to the Owner. All repair methods and materials shall be approved prior to coring.

D. The pavement shall be compacted to a density corresponding to a range equal to and between 92.0 percent and 95 percent of Maximum Theoretical Density based on the day's Rice Gravity results.

3.7 ACCEPTANCE AND PAY FACTORS

A. SP2 HMA

1. SP2 HMA will be accepted on a pass-fail basis per each day of production paving. HMA that does not meet mix characteristics or density testing requirements shall be removed and replaced at no additional cost to owner unless otherwise approved by Owner.

B. SP3/SP4 Mixes

1. Perform pay factor analysis in accordance with ITD specifications for HMA and ITD QA SP 01-15.

2. Pay Factor will be capped at 1.0 with no available incentive payment.

3. Provide pay factor analysis in a clear spreadsheet that is labeled, organized, and easy to follow by Engineer for convenience. Payment of HMA will be conditional on the pay factor concurrence.

C. Acceptance

1. Asphalt that is, in the opinion of the Engineer or Owner, excessively open graded or otherwise unsatisfactory in appearance, shall be removed and replaced at no additional cost to Owner unless otherwise approved by Owner.

Part 2 MEASUREMENT AND PAYMENT

2.1 Use one or more of the following unit bid item(s) as designated on the Bid Schedule.

A. Superpave HMA: by the ton. Includes all labor, material, and equipment required to perform the work. Work includes fine grading base, Superpave HMA of the class specified, job mix design, additives, loading, hauling, placing, compacting, profiling where applicable, testing the asphalt mix characteristics, coring and filling the holes, testing the density of the mix, and finishing asphalt and all other necessary items required to perform the work as specified. Corrective action for pavement smoothness, if required, is incidental. Saw cutting is incidental to asphalt removal. Replacement of pavement beyond limits or dimensions shown on the plans shall not be paid unless previously approved in writing.

1. Bid Schedule Reference…810.4.1.A.5
2. Bid Schedule Description: Superpave HMA, Class SP-3, ½" aggregate…ton (TON)

DIVISION 900 – PRESSURE IRRIGATION

Section 901 – Pressure Irrigation Pipe

Part 3 WORKMANSHIP

3.12 PRESSURE IRRIGATION SYSTEM MODIFICATIONS

The Contractor, in the presence of the Engineer, shall meet with the adjacent property Owner prior to excavation and removal work. The Contractor and Owner shall test the existing system to verify that it currently is operational. The Contractor and Owner, during the meeting shall identify and flag all existing sprinkler head locations; piping locations; and valve locations.

Any modifications necessary to relocate and restore private property irrigation systems will be field directed by the Engineer.

The Contractor shall conduct excavation operations in a manner that will protect existing irrigations systems. Any irrigation systems damaged as a result of the Contractor's operation shall be repaired by the Contractor to the satisfaction of the Engineer at no cost to the Agency.

The Contractor shall flush and test all lines in the system after completion of any modifications. All tests shall be conducted at existing residential household pressure. If head coverage or pressure is not satisfactory to the Owner, the Contractor will replace heads and re-flush the system until it is.

Part 4 MEASUREMENT AND PAYMENT

Add the following;

C. Pressure Irrigation System Modifications: Extent and location of existing irrigation lines is unknown; therefore, this work will be measured by contingency amount. Payment for this work will be by

time and materials. Item includes all labor, materials, and equipment necessary to modify existing irrigation systems, and furnish and install new equipment to provide a complete and functional irrigation system in accordance with these specifications and as shown on the plans. Contactor shall submit irrigation design to Engineer for approval prior to installation.

1. Bid Schedule Payment Reference…901.4.1.C.1
2. Bid Schedule Description: Pressure Irrigation System Modifications… contingency amount (CA)

DIVISION 1000 – CONSTRUCTION STORM WATER BMPs

Section 1005 – Slope Protection

Part 4 MEASUREMENT AND PAYMENT

Add the following;

I. Fiber Wattle: Per linear foot measured on a horizontal basis along the centerline of the silt fence. Includes all appurtenances not itemized in the Bid Schedule.

1. Bid Schedule Payment Reference: 1005.4.1.I.1.
2. Bid Schedule Description: Fiber Wattle...linear foot (LF).

DIVISION 1100 – TRAFFIC

Section 1102 – Street Lighting

Part 2 MATERIALS

Add the following;

2.17 LIGHTED BOLLARDS

A. Lighted bollards to be Kim Lighting Round LED Bollard VRB1C/20L4KUV/DB/BR-C or approved equal.

Part 3 WORKMANSHIP

Add the following;

3.12 LIGHTED BOLLARDS INSTALLATION

A. Install bollard to manufacturer's specifications.
B. Coordinate with City to make connection with existing power source.
C. Test light in presence of engineer.

Part 4 MEASUREMENT AND PAYMENT

Add the following;

I. Lighted Bollards: Measurement and payment shall be by the each. Work includes full compensation for all materials, labor and equipment necessary for completing the work and all appurtenances not itemized in the Bid Schedule. If required and not listed in the Bid Schedule, payment shall be considered as incidental to other Bid Items.

1. Bid Schedule Payment Reference: 1102.4.1.I.1.
2. Bid Schedule Description: Lighted Bollards... each (EA).

Section 1103 – Construction Traffic Control

Part 3 WORKMANSHIP

3.1 GENERAL

Add the following to Paragraph B;

Traffic Control Plan shall include traffic control for both vehicles and pedestrians. Accessible pedestrian access routes in accordance with the PROWAG, ADA, and MUTCD shall be provided and maintained throughout the project.

Add the following;

L. The Contractor shall satisfy the Engineer and the City that all required traffic control materials and devices and temporary signs are at their immediate disposal prior to the Owner issuing the Notice to Proceed.

M. The Contractor must notify all emergency services with the time and dates of street closures at least 24 hours prior to such closures.

N. Detours within the limits of the project such as side street crossings, temporary bridges over freshly placed concrete, utilization of one or more lanes of the construction area for maintenance of traffic, and such related facilities for the maintenance of traffic shall be the responsibility of the Contractor. Costs for these items shall be considered incidental to the items in the Bid Schedule.

O. Where access is being provided, a gravel surface is acceptable through the active construction zone. Gravel surface for local access must be maintained as necessary to be free of ruts, potholes, washboarding, excessive dust, and major puddles (>1" deep).

P. Where parking is a hazard to through traffic or to the construction work, it shall be restricted entirely or, at a minimum, during the time when it creates a hazard. The Contractor shall be responsible for obtaining and placing “No Parking” signs to the affected properties at least 48 hours prior to such restriction and shall maintain the signs for as long as they are in operation. The “No Parking” sign shall be a 24

in. x 24 in. dimension per the MUTCD standards and include the dates the street will be closed. In the event that parked vehicles hinder construction, the Contractor is responsible for notifying the owner prior to removal, when the owner can be determined. The Contractor, at their own expense, will be responsible for towing away parked vehicles hindering construction. Costs for the signs and towing shall be considered incidental to the items in the Bid Schedule.

Q. The Contractor shall designate a contact person responsible for maintenance of the traffic control devices on the project. The contact person must be available by phone during non-working hours including nights, weekends, holidays, etc. The Contractor will be responsible for making such repairs as may be needed to maintain traffic accessibility and traffic control.

R. Any additional flagging not approved in the Contractor's traffic control plan shall be approved by the Engineer prior to being implemented.

S. Garbage pickup shall be maintained at all times.

T. Mail delivery shall be maintained at all times. Temporary mail receptacles are acceptable but must be coordinated with the USPS Postmaster. Any existing mailboxes shall be preserved and relocated accordingly.

U. Temporary pedestrian access routes will be firm, stable, and slip resistant. Acceptable materials include concrete, asphalt, wood, compacted gravel and compacted asphalt grindings. Grindings or gravel shall be meet the gradation for ¾" Crushed Aggregate Base.

DIVISION 2000 – MISCELLANEOUS

Section 2030 – **Utility Adjustments**

Part 1 GENERAL

1.4 Delete this section and add the following;

Utility Adjustment

A. Perform utility adjustments prior to final paving.

B. Adjust all existing utilities to grade. Utility adjustments shall be considered incidental to paving.

AMMEND DIVISION 2000 – MISCELLANEOUS TO INCLUDE THE FOLLOWING SECTION

SECTION 2060

LOCATING WIRE

PART 1 GENERAL

1.1 SECTION INCLUDES

A. Installation of electrically continuous tracer wire with access points as described herein to be used for locating pipe with an electronic pipe locator after installation. Tracer wire shall be installed on all water mains and services up to the water service meter box. Tracer wire shall be installed on all sanitary sewer mains and services, and storm sewer mains and services up to the service line right of way (ROW).

PART 2 MATERIALS

2.1 LOCATING WIRE:

A. Open Trench / Open Cut

1. No. 12 AWG Copper with a minimum 450 lb. break load, minimum 30 mil insulation for direct bury color coded per American Public Works Association (APWA) standard for the specific utility being marked.

B. Directional Drilling/Boring

1. No 12. AWG extra strength wire with a minimum 1,150 lb. break load, minimum 45 mil HDPE insulation for direct bury, color coded per APWA standard for the specific utility being marked.

C. Pipe Bursting –

1. Copperhead 7x7 stranded copper-clad steel SoloShot Xteme Strength with 4,700 lb. break load, minimum 50 mil HDPE insulation color coded per APWA standard for specific utility being marked, or approved equivalent.

2.2 DIRECT BURY SPLICE KIT

A. 3M Direct Bury Splice Kit DBR/Y-6, or, Copperhead SnakeBite Locking Connector, Mainline to Service Connector, or an approved equal

2.3 GROUND ROD

A. Magnesium grounding anode, 18.5” in length, 1.5 lb. minimum.

2.4 LOCATING WIRE ACCESS POINT BOX

A. Fire Hydrant Access Point Box:

1. Copperhead Industries Cobra, two-terminal, with flange or an approved equal.

B. Medium Duty Access Point Box located within a path, driveway, or sidewalk.

1. Copperhead Industries, SnakePit Concrete/Driveway, Two-terminal switchable, or an approved equal

C. Light Duty Access Point Box located within a yard or green strip.

1. Copperhead Industries, SnakePit Light Duty Series, Two-terminal switchable, or an approved equal

D. Traffic Rated Access Point Box for water line, sanitary and storm sewer box. Located where interval between access points are greater than 500 feet.

1. Frame and Cover: Rich Series 921 or 926, or approved substitution

2. Risers: PVC AWWA C 900 pipe sized to fin inside the locating wire box without slipping. Refer to Standard Drawing SD-514 – Locating Wire Box Detail

3. Collar: Class 4000 psi Concrete per Section 703 – Cast-in-place Concrete

2.5 MARKING TAPE

A. Water line marking tape

1. 3 inch blue 4 mil polyethylene detectible with labelling reading “Caution – Buried Water Line Below” in 1-1/2” black lettering

B. Sanitary and storm drain sewer marking tape

1. 3 inch green 4 mil polyethylene detectible with labelling reading “Caution – Buried Sewer Line Below” in 1-1/2” black lettering.

PART 3 WORKMANSHIP

3.1 GENERAL

A. Tracer wire installation shall be performed in such a manner that allows proper access for connection of line tracing equipment, proper locating of wire without loss or deterioration of low frequency (512 Hz) signal, and without distortion of signal caused by more than one wire being installed in close proximity to one another.

B. Tracer wire systems must be installed as a single continuous wire, except where using approved connectors. No looping or coiling of wire is allowed.

C. Any damage occurring during installation of the tracer wire must be immediately repaired by removing the damaged wire and installing a new section of wire with approved connectors. Taping and/or spray coating shall not be allowed.

D. Tracer wire shall be installed at the bottom half of the pipe and secured (taped/tied) at 10 - foot intervals.

E. Mainline tracer wire shall not be connected to existing conductive pipes. Treat as a mainline dead-end ground using an approved waterproof connector to a Ground Rod driven into virgin soil beneath and in line with the utility.

F. All service lateral tracer wire shall be a single wire, connected to the mainline tracer wire using a three-way mainline-to-service connector, installed without cutting/splicing the mainline tracer wire.

G. In occurrences where an existing tracer wire is encountered on an existing utility that is being extended or tied into, the new tracer wire and existing tracer wire shall be connected using approved connectors.

H. Tracer wire on all service laterals/stubs must terminate at an approved tracer wire access point located directly above the utility, at the edge of the road right-of-way, but out of the roadway.

I. One foot of excess/slack wire is required in all tracer wire access points after meeting final elevation.

J. Tracer wire must be properly grounded as specified.

K. At all mainline dead-ends, tracer wire shall go to ground using an approved connection to a 1.5-lb., drive-in, magnesium ground rod.

L. When grounding the tracer wire at dead-ends/stubs, the Ground Rod shall be driven into virgin soil directly beneath and in line with the utility.

M. Where the Ground Rod wire will be connected to a tracer wire access point, one foot of excess/slack wire is required after meeting final elevation.

N. Prior to commencing any new construction, a Utility Locating System Plan (ULSP) must be submitted and approved by the City showing the proper tracer wire installation for all water and sewer lines. The ULSP will be required to show the locations of all tracer wire, ground rods, and above grade access points.

O. When tracer wire access point is to be located within a public or private street, a Traffic Rated Tracer Wire Access Point Box per MSD-2000.8 shall be used. For tracer wire access point located within a sidewalk,

walking path, or driveway an access point box per 2060.2.4.B shall be used. For a tracer wire point located within a yard or green strip an access point box per 2060.2.4.C shall be used. For a tracer wire access point located on a fire hydrant an access point box per 2060.2.4.A shall be used. The tracer wire access point for water service lines shall be located in an approved water meter box per ISPWC Division 400.

3.2 SANITARY AND STORM SEWER SYSTEMS

A. A mainline tracer wire must be installed, with all service lateral tracer wires properly connected to the mainline tracer wire, to promote tracing/locating capabilities from a single connection point.

B. Lay mainline tracer wire continuously, by-passing around the outside of manholes/structures on the north or east side.

C. Tracer wire on all sanitary service laterals must terminate at an approved tracer wire access point color coded green and located directly above the service lateral at the edge of right-of-way.

3.3 WATER

A. A mainline tracer wire must be installed, with all service lateral tracer wires properly connected to the mainline tracer wire, to promote tracing/locating capabilities from a single connection point.

B. Lay mainline tracer wire continuously, by-passing around the outside of valves and fittings on the north or east side.

C. A single tracer wire only shall be installed on all water service laterals and must terminate at an approved tracer wire access point, color coded blue and located directly above the service lateral at the edge of right-of-way.

D. Tracer wire access points will be installed at all fire hydrants and service line water meters per MSD-2000.4.

F. All conductive and non-conductive service lines shall include tracer wire.

3.4 TESTING

A. All new tracer wire installations shall be located using typical low frequency (512 Hz) line tracing equipment, witnessed by the City as applicable, prior to acceptance.

B. This verification shall be performed upon completion of rough grading and again prior to final acceptance of the project.

C. Continuity testing in lieu of actual line tracing shall not be accepted.

PART 4 MEASUREMENT AND PAYMENT

No separate measurement or payment to the Contractor will be made for the work required under this Section.

END OF SECTION

ISPWC – 2000

MISCELLANEOUS – STANDARD DRAWINGS

REMOVE THE FOLLOWING ISPWC STANDARD DRAWINGS:

ISPWC SD-514 LOCATION WIRE BOX DETAIL.

REPLACE THE FOLLOWING ISPWC STANDARD DRAWINGS:

ISPWC SD-2020A THROUGH SD-2020E WITH MSD-2000.1 THROUGH MSE-2000.2.

ADD THE FOLLOWING CITY OF MOSCOW STANDARD DRAWINGS:

MSD-2000.3 – LOCATING WIRE WATER SYSTEM PLAN VIEW.

MSD-2000.4 – LOCATING WIRE WATER SYSTEM DETAIL.

MSD-2000.5 – TYPICAL WATER & SEWER PLAN VIEW.

MSD-2000.6 – SEWER SERVICE SECTION & PLAN VIEW.

MSD-2000.7 – SEWER MANHOLE PLAN/SECTION VIEW

MSD-2000.8 – TRAFFIC RATED TRACER WIRE ACCESS POINT BOX.

SECTION 4

SPECIAL PROVISIONS

SP-1 ADMINISTRATIVE REQUIREMENTS

PART 1 GENERAL

1.01 SECTION INCLUDES

A. Preconstruction meeting.

B. Progress meetings.

C. Construction progress schedule.

D. Photographs.

E. Coordination drawings.

1.02 PROJECT COORDINATION

A. Project Coordinator: Engineer.

B. Cooperate with the Engineer in allocation of mobilization areas of site; for field offices and sheds, for vehicle access, traffic, and parking facilities.

C. During construction, coordinate use of site and facilities through the Engineer.

D. Comply with Engineer's procedures for intra-project communications; submittals, reports and records, schedules, coordination drawings, and recommendations; and resolution of ambiguities and conflicts.

E. Comply with instructions of the Engineer for use of temporary utilities and construction facilities.

F. Coordinate field engineering and layout work under instructions of the Engineer.

G. Make the following types of submittals to the Engineer:

1. Requests for interpretation.
2. Requests for substitution.
3. Shop drawings, product data, and samples.
4. Test and inspection reports.
5. Manufacturer's instructions and field reports.
6. Applications for payment and change order requests.
7. Progress schedules.
8. Coordination drawings.
9. Closeout submittals.

H. Contractor is responsible for coordinating with impacted utilities and shall coordinate holding of power poles to pay any fees that be associated with such activities.

1.03 COORDINATION AND PROJECT CONDITIONS

A. Coordinate scheduling, submittals and work of the various sections of the project to ensure efficient and orderly sequence of installation of interdependent construction elements, with provisions for accommodating items installed at a later date.

B. Verify utility requirements and characteristics of operating equipment are compatible with building utilities. Coordinate work of various sections having interdependent responsibilities for installing, connecting to, and placing in service, such equipment.

C. Coordinate completion and clean-up of work of separate sections in preparation for substantial completion and for portions of work designated for Owner's partial occupancy.

D. After Owner occupancy of premises, coordinate access to site for correction of defective work and work not in accordance with the contract documents, to minimize disruption of Owner's activities.

1.04 FIELD ENGINEERING

A. The Contractor shall furnish all survey necessary for the construction of this project.

B. The Contractor shall be responsible for setting, maintaining, and resetting (as may be required) all horizontal and vertical construction staking necessary for the completion of the project. Except for the survey control data which is included in the plans, any additional calculations, surveying, and measuring required for setting and maintaining the necessary lines and grades shall be the Contractor’s responsibility.

C. The Contractor shall provide the Contracting Agency copies of any, survey notes, references for monuments, calculations and staking data when requested by the Engineer.

D. Detailed survey records shall be maintained, including a description of the work performed on each shift, the methods utilized, and the control points used. The record shall be adequate to allow the survey to be reproduced. A copy of each day's record shall be provided to the Engineer within three working days after the end of the shift.

E. The Contractor shall ensure a surveying accuracy within ±0.02 feet Vertical and ±0.04 feet Horizontal.

F. The Contracting Agency may spot-check the Contractor's surveying. These spot-checks will not change the requirements for normal checking by the Contractor.

G. When staking roadway alignment and stationing, the Contractor shall perform independent checks from different secondary control to ensure that the points staked are within the specified survey accuracy tolerances.

H. The Contracting Agency will provide AutoCad drawing files showing the horizontal and vertical alignments. The Contractor shall calculate coordinates for the alignment and develop his own staking sheets for the project. He shall provide a copy of the staking sheets to the Engineer prior to beginning excavation activities.

I. Contract work to be performed using contractor-provided stakes shall not begin until the stakes are approved by the Contracting Agency. Such approval shall not relieve the Contractor of responsibility for the accuracy of the stakes.

J. A finish grade surface of the civil engineering designed data, in land xml format only, will be made available for use by the contractor. The XML file is not intended to substitute the design plans. The contractor is responsible for verifying the xml file. Use of the file will be at the Contractor's risk.

K. Contractor to provide Consultant a copy of their site calibration report for review and approval prior to the start of machine grading utilizing GPS.

L. Stakes shall be provided to construct this project in accordance with the Plans. Additional stakes may be needed that are not described in the Plans; these additional stakes will be required but not limited to intersections and drainage. The Contractor shall thoroughly familiarize themselves with the plans to identify all additional staking required.

M. The Contractor shall take as-built measurements of the location of all utility piping, conduit, and wire locations; all utility structure locations; and all changes in grade, slope and elevations. The measurements shall be neatly noted on a full size set of plans, the "Record Drawings". Transmittal of an accurate and complete Record Set to the City of Moscow Engineering Manager is required prior to Contract Completion.

PART 2 PRODUCTS - NOT USED

PART 3 EXECUTION

3.01 PRECONSTRUCTION MEETING

A. Engineer will schedule a meeting after Notice of Award.

B. Attendance Required:

1. Owner.
2. Engineer.
3. Contractor.
4. Subcontractors, if applicable.
5. Funding Agencies, if applicable.

C. Agenda:

1. Execution of Owner- Contractor Agreement.
2. Submission of executed bonds and insurance certificates.
3. Distribution of Contract Documents.
4. Submission of list of Subcontractors, and progress schedule.
5. Designation of personnel representing the parties to Contract, Owner and Engineer.
6. Procedures and processing of field decisions, submittals, substitutions, applications for payments, proposal request, Change Orders, and Contract closeout procedures.
7. Scheduling: Contractor to submit a schedule for the entire project duration, including subcontractor work. The schedule must be approved by the Engineer prior to commencement of work. Schedule shall be in accordance with Section 01 3216.

8. Use of premises by Owner and Contractor.
9. Owner's requirements and occupancy prior to completion.
10. Construction facilities and controls provided by Owner.
11. Temporary utilities provided by Owner.
12. Survey and building layout.
13. Security and housekeeping procedures.
14. Application for payment procedures.
15. Procedures for testing.
16. Procedures for maintaining record documents.
17. Requirements for start-up of equipment.
18. Inspection and acceptance of equipment put into service during construction period.
19. Scheduling activities of a Geotechnical Engineer.
20. Schedule construction progress meetings.

D. Engineer shall record minutes and distribute copies within five days after meeting to participants, with a copy to Contractor, Owner, participants, and those affected by decisions made.

3.02 PROGRESS MEETINGS

A. Schedule and administer meetings throughout progress of the Work at weekly intervals.

B. Engineer will make arrangements for meetings, prepare agenda with copies for participants, preside at meetings.

C. Attendance Required: Job superintendent, major Subcontractors and suppliers, Owner, Engineer, Funding Agencies as appropriate to agenda topics for each meeting.

D. Agenda:

1. Review minutes of previous meetings.
2. Review of Work progress.
3. Field observations, problems, and decisions.
4. Identification of problems that impede, or will impede, planned progress.
5. Review of submittals schedule and status of submittals.
6. Review of off-site fabrication and delivery schedules.
7. Maintenance of progress schedule.
8. Corrective measures to regain projected schedules.
9. Planned progress during succeeding work period.
10. Coordination of projected progress.
11. Maintenance of quality and work standards.
12. Effect of proposed changes on progress schedule and coordination.
13. Other business relating to Work.

E. Engineer will record minutes and distribute copies within five days after meeting to participants, with a copy to Contractor, Owner, Funding Agency, participants, and those affected by decisions made.

3.03 CONSTRUCTION PROGRESS SCHEDULE

A. Within 10 days after date of the Agreement, submit preliminary schedule defining planned operations for the first 60 days of Work, with a general outline for remainder of Work.

B. If preliminary schedule requires revision after review, submit revised schedule within 10 days.

C. Within 20 days after review of preliminary schedule, submit draft of proposed complete schedule for review.

1. Include written certification that major contractors have reviewed and accepted proposed schedule.

D. Within 10 days after joint review, submit complete schedule.

E. Submit updated schedule with each Application for Payment.

F. See Section 01 3216: Construction Project Schedules

3.04 PHOTOGRAPHS

A. Photography Type: Digital; electronic files.

B. Take photographs of site and construction throughout progress of Work.

C. Take photographs as evidence of existing project conditions such as:

1. Existing private property features to be retained and protected or to be restored to their pre-project condition.
2. Existing public features to be retained and protected or to be restored to their pre-project condition.

3.05 COORDINATION DRAWINGS

A. Provide information required by Engineer for preparation of coordination drawings.

B. Review drawings prior to submission to Engineer.

PART 4 MEASUREMENT AND PAYMENT

4.1 SECTION INCLUDES

A. Construction Survey – By the lump sum. Includes full compensation for all materials, labor, and equipment necessary for completing the work and all appurtenances not itemized in the Bid Schedule. In addition, it shall be full compensation for taking and recording as-built measurements of constructed work.

1. Bid Schedule Payment Reference: SP 1.4.1.A.1.
2. Bid Schedule Description: Construction Survey… lump sum (LS).

END OF SECTION

SP 2 QUALITY ASSURANCE/QUALITY CONTROL

PART 1 GENERAL

1.1 SECTION INCLUDES

A. Quality Control.

B. Quality Assurance.

C. Tolerances.

D. References.

E. Field Samples

F. Construction Observation & Underground Utility Testing

G. Manufacturers' field services.

1.2 RELATED SECTIONS

A. SP-3 Submittal Procedures: Submission of Manufacturers' Instructions and Certificates.

1.3 QUALITY CONTROL

A. The Contractor shall coordinate and provide quality control, which shall include the necessary proctor(s) combined with compaction testing performed by an independent testing firm to perform the following, at a minimum:

1. Samples, proctors, testing reports.
2. Establish the compaction processes required to meet the requirements of the Contract Documents.
3. Perform all compaction testing as outlined in the contract documents.

B. Materials may vary across the project. If they do, the contractor shall coordinate and provide the proctor(s) combined with compaction testing performed by an independent testing firm to re-establish the compaction processes required to meet the requirements of the Contract Documents. Contractor shall monitor quality control over suppliers, manufacturers, products, services, site conditions, and workmanship to produce Work of specified quality.

C. Contractor shall provide the Owner with all testing proctors and testing results taken throughout the entire project.

D. Contractor shall designate the person responsible for Contractor's quality control while Work is in progress, and shall notify Engineer, in writing, prior to any change in quality control representative assignment.

E. Contractor shall monitor quality control over suppliers, manufacturers, products, services, site conditions, and workmanship to produce Work of specified quality.

F. Comply fully with manufacturers' instructions, including each step in sequence.

G. Should manufacturers' instructions conflict with Contract Documents, request clarification from Engineer before proceeding.

H. Comply with specified standards as a minimum quality for the Work except when more stringent tolerances, codes, or specified requirements indicate higher standards or more precise workmanship.

I. Perform work by persons qualified to produce workmanship of specified quality.

J. Secure Products in place with positive anchorage devices designed and sized to withstand stresses, vibration, physical distortion, or disfigurement.

K. Verify field measurements are as indicated on Shop Drawings or as instructed by manufacturer.

1.4 QUALITY ASSURANCE

A. The Owner or the Owner's Representative may perform Quality Assurance as deemed necessary by the Owner or the Owner's Representative. Quality Assurance will occur after Contractor's Quality Control Measures. Quality Assurance may be any of the following:

1. Tests by an independent laboratory using proctors provided by the Contractor.
2. Testing by the Owner’s Representation under the direction of the Engineer of Record.
3. Observation of work.

B. The Contractor shall coordinate his work with the Engineer and cooperate with testing personnel. The Contractor shall:

1. Submit weekly schedules and updates by noon Friday for the following week's work elements with days requiring testing services clearly identified.
2. Notify Engineer 24 hours prior to expected time for operations requiring services.
3. Failure of Contractor to provide adequate notice (as specified above) shall not be grounds for claims of delay by the Contractor.

C. Re-testing required because of non-conformance to specified requirements shall be performed at no cost to the Owner. Contractor shall be responsible for payments due by re-testing. Payment for re-testing will be charged to the Contractor by deducting the inspection and testing charges from the Contract Price.

1.5 REFERENCES

A. Conform to reference standard by date of issue current on date of Contract Documents.

B. Should specified reference standards conflict with Contract Documents, request clarification from Engineer before proceeding.

C. The contractual relationship of the parties to the Contract shall not be altered from the Contract Documents by mention or inference otherwise in any reference document.

1.6 FIELD SAMPLES

A. Install field samples at the site as required by individual specifications Sections for review.

B. Acceptable samples represent a quality level for the Work.

C. Where field sample is specified in individual Sections to be removed, clear area after field sample has been accepted by Engineer.

1.7 CONSTRUCTION OBSERVATION AND UNDERGOUND UTILITY TESTING

A. The Owner shall provide observation during construction for quality assurance as defined in the Contract Documents. Contractor shall cooperate with the observer.

B. The Contractor shall provide the equipment and manpower to conduct all acceptance (leak, pressure, etc.) tests on underground utilities as required in the Specifications.

1.8 MANUFACTURERS' FIELD SERVICES AND REPORTS

A. When specified in individual specification Sections, require material or Product suppliers or manufacturers to provide qualified staff personnel to observe site conditions, conditions of surfaces and installation, quality of workmanship, start-up of equipment, test, adjust and balance of equipment, as applicable, and to initiate instructions when necessary.

B. Individuals to report observations and site decisions or instructions given to applicators or installers that are supplemental or contrary to manufacturers' written instructions.

C. Submit report within 15 days of observation to Engineer for review.

1.9 TOLERANCES

A. Monitor fabrication and installation tolerance control of products to produce acceptable Work. Do not permit tolerances to accumulate.

B. Comply with manufacturers’ tolerances. When manufacturers’ tolerances conflict with Contract Documents, request clarification from Architect/Engineer before proceeding.

C. Adjust products to appropriate dimensions; position before securing products in place.

THIS PAGE LEFT INTENTIONALLY BLANK

SP 3 SUBMITTAL PROCEDURES

PART 1 GENERAL

1.01 SUMMARY

A. Section Includes:
   1. Mechanics and administration of the submittal process for:
      a. Shop Drawings.
      b. Miscellaneous submittals.
   2. General content requirements for shop drawings.

B. Related Sections include but are not necessarily limited to:
   1. Bidding Requirements, Contract Forms, and Conditions of the Contract.
   2. Bid Documents
   3. Sections in ISPWC identifying required submittals.

1.02 DEFINITIONS

A. Shop Drawings:
   1. See General Conditions.
   2. Product data are Shop Drawing information

B. Designs stamped by Idaho Licensed Professional Engineer:
   1. Shoring design for Bore Pits.

C. Miscellaneous Submittals:
   1. Submittals other than Shop Drawings
   2. Representative types of miscellaneous submittal items include but are not limited to:
      a. Construction Schedule.
      b. Manufacturer's installation certification letters.
      c. Warranties.
      d. Service agreements.

1.03 SUBMITTAL SCHEDULE

A. Schedule of Shop Drawings:
   1. Submitted and approved within 20 days of receipt of Notice to Proceed.
   2. Account for multiple transmittals under any specification section where partial submittals will be transmitted.

B. Shop Drawings: Submittal and approval prior to initiation of work.

1.04 PREPARATION OF SUBMITTALS

A. General
   1. All submittals and all pages of all copies of a submittal shall be completely legible.

2. Submittals which, in the Engineer's sole option, are illegible will be returned without review.
3. For each submittal for review, allow 15 days excluding delivery time to and from the Contractor.

B. Shop Drawings:
1. Scope of any submittal:
   a. Limited to one (1) Specification Section.
   b. Do not submit under any Specification Section entitled (in part) "Basic Requirements" unless the product or material submitted is specified, in total, in a "Basic Requirements" section.
2. Numbering submittals:
   a. Include a prefix (the Specification Section number) followed by a series number, for example a submittal from this section would be labeled "SP3-01", beginning with "01" and increasing sequentially with each additional submittal.
   b. If more than one (1) submittal under any specification Section, assign consecutive series numbers to subsequent submittals.
   c. Submittal numbers may be included either in the title of the document or on the top of the first page of the submittal.
3. Describing submittal contents:
   a. Provide a description of each component or item in submittal capable of receiving an independent review action. Description shall be provided on the product sheet for each item (or on the first page of multiple-page product sheets).
   b. Identify for each item:
      i. Manufacturer and Manufacturer's Drawing or data number.
      ii. Contract Document tag number(s).
      iii. Unique page numbers for each page of each separate item.
   c. When submitting "or-equal" items that are not the products of named manufacturers, include the words "or-equal" in the item description.
4. Contractor review:
   a. Contractor shall review and stamp each submittal prior to submitting to Engineer. By submitting the submittal to the Engineer, Contractor is certifying that he/she has satisfied the Contractor's responsibility stipulated under General Conditions paragraph 6.17.
   b. Unstamped submittals will be returned without review.
5. Resubmittals:
   a. Number with original root number and suffix letter starting with "A" on the resubmittal.
   b. Do not increase the scope of any prior submittal.
   c. Do not include submittal information for items listed with prior "No Exceptions" or "Furnish as Corrected" in resubmittal.

d. Indicate “Outstanding-To Be Resubmitted At a Later Date” for any prior “Revise and Resubmit” or “Rejected” item not included in resubmittal.

i. Obtain Engineer’s approval to exclude items.

6. All submittals shall be submitted and returned electronically, unless otherwise pre-approved by Engineer.
7. Provide clear space (3 IN SQ) for Engineer stamp for each item capable of receiving independent review action.
8. Contractor shall not use red color for marks on submittals.
9. Submittal contents:

a. Coordinate and identify Shop Drawing contents so that all items can be easily verified by the Engineer.

b. Identify equipment or material used, tag number, drawing detail reference, weight, and other project specific information.

c. Provide sufficient information together with technical cut sheets and data to allow an evaluation to be made to determine that the item submitted is in compliance with the Contract Documents.

d. Indicate exact item or model and all options proposed.

e. When a Shop Drawing submittal is called for in any Specification Section, include as appropriate, scaled details, sizes, dimensions, performance characteristics, capacities, test data, anchoring details, installation instructions, storage and handling instructions, color charges, layout drawings, rough-in diagrams, wiring diagrams, controls, weight, and other pertinent data in addition to information specifically stipulated in the Specification Section.

i. Arrange data and performance information in format similar to that provided in Contract Documents.

ii. Provide, at minimum, the detail specified in the Contract Documents.

f. If proposed equipment or materials deviate from the Contract Drawings or Specifications in any way, clearly note the deviation and justify the said deviation in detail in a separate letter immediately following transmittal sheet.

C. Miscellaneous Submittals:

1. Prepare in the format and detail specified in Specification requiring the miscellaneous submittal.
2. Electronic copy submittals:

a. Do not password protect and or lock the PDF document.

b. Drawings or other graphics must be converted to PDF format and made part of the one (1) PDF document.

i. Scanning to be used only where actual file conversion is not possible.

c. Rotate pages that must be viewed in landscape to the appropriate position for easy reading.

d. Images only shall be scanned at a resolution of 300 dpi or greater.
   i. Perform Optical Character Recognition (OCR) capture on all images.
   ii. Achieve OCR with the “original image with hidden text” option.
   iii. Work searches of the PDF document must operate successfully to demonstrate OCR compliance.
e. Create bookmarks in the navigation frame, for each entry in the Table of Contents / Index.
   i. Normally three (3) levels deep (i.e. “Chapter,” “Section,” “Sub-Section”).
f. Thumbnails must be generated for each PDF file.
g. Set the opening view for PDF files as follows:
   i. Initial view: Bookmarks and Page.
   ii. Magnification: Fit in Window.
   iii. Page layout: Single page,
   iv. Set the file to open to the cover page of the manual with bookmarks to the left, and the first bookmark linked to the cover pages.
h. All PDF documents shall be set with the option “Fast Web View” to open the first pages of the document for the viewer while the rest of the document continues to load.
i. File naming conventions:
   i. File names shall use a “ted dot three” convention (XXXXX-YY-Z.PDF) where XXXXX is the Specification Section Number, YY is the Shop Drawing Root number and Z is an ID number used to designate the associated volume.
      (a) Example 1:
         (1) Two (2) pumps submitted as separate Shop Drawings under the same Specification Section:

            Pump 1 = 11061-01-1.pdf
            Pump 2 = 11061-02-1.pdf

      (b) Example 2:
         (1) One (1) Control system submitted as one (1) Shop Drawing but separated into two (2) O&M Volumes:

            Volume 1 = 13440-01-1.pdf
            Volume 2 = 13440-01-2.pdf

1.05 TRANSMITTAL OF SUBMITTALS

A. Shop Drawings, Samples and Operation and Maintenance Manuals:
   1. Transmit all submittals to:
      a. Project Administrator as noted at Pre-Construction meeting.
   2. All submittals must be from Contractor.

a. Submittals will not be received from or returned to subcontractors.

3. Provide submittal information defining specific equipment or materials utilized on the Project.

a. Generalized product information, not clearly defining specific equipment or materials to be provided, will be rejected.

B. Miscellaneous Submittals:

1. Transmit under Contractor's standard letter of transmittal or letterhead.

2. Transmit to:

a. Project Administrator and Resident Project Engineer.

3. Provide copy of letter of transmittal without attachments to Engineer's Resident Project Representative.

a. Exception for concrete, soils compaction and pressure test reports.

i. Transmit one (1) copy of test reports to Resident Project Engineer.

ii. Transmit one (1) copy of special inspection reports

1.06 ENGINEER'S REVIEW ACTION

A. Shop Drawings and Samples:

1. Items within submittals will be reviewed for overall design intent and will receive one of the following actions:

a. NO EXCEPTIONS

b. FURNISH AS CORRECTED

c. REVISE AND RESUBMIT

d. REJECTED

e. ENGINEER'S REVIEW NOT REQUIRED.

2. In relying on the representation on the Contractor's review and approval stamp, Owner and Engineer reserve the right to review and process poorly organized and poorly described submittals as follows:

a. Submittals transmitted with a description identifying a single item and found to contain multiple independent items:

i. Review and approval will be limited to the single item described.

ii. Other items identified in the submittal will:

(a) Not be logged as received by the Engineer.

(b) Be removed from the submittal package and returned without review and comment to the Contractor for coordination, description and stamping.

(c) Be submitted by the Contractor as a new series number, not as a re-submittal number.

b. Engineer, at Engineer's discretion, may review the transmittal letter item list and descriptions, and conduct review.

i. Unless Contractor notifies Engineer in writing that the Engineer's revision of the transmittal letter item list and descriptions was in

error, Contractor's review and approval stamp will be deemed to have applied to the entire contents of the submittal package.

3. Submittals returned with "No Exceptions" or "Furnish as Corrected" are considered ready for fabrication and installation.
   a. If for any reason a submittal that has a "No Exceptions" or "Furnish as Corrected" is resubmitted, it must be accompanied by a letter defining the changes that have been made and the reason for the resubmittal.
4. Submittals with "No Exceptions" or "Furnish as Corrected" combined with "Revise and Resubmit" or "Rejected" will be individually analyzed giving consideration as follows:
   a. The portion of the submittal given "Revise and Resubmit" or "Rejected" will not be distributed (unless previously agreed to otherwise at the Preconstruction Conference.)
   b. Items marked "No Exceptions" or "Furnish as Corrected" will be fully distributed.
   c. If a portion of the items or system proposed are acceptable, however, the major part of the individual drawings or documents are incomplete or require revision, the entire submittal may be given "Revise and Resubmit" or "Rejected".
      i. This is at the sole discretion of the Engineer.
      ii. In this case, some drawings may contain relatively few or no comments or the statement "Resubmit to maintain a complete package."
      iii. Distribution to the Owner and field will not be made (unless previously agreed to otherwise.)
5. Failure to include any specific information specified under the submittal paragraphs of the Specifications will result in the submittal being returned to the Contractor with "Revise and Resubmit" or "Rejected".
6. Calculations required in individual Specifications Sections will be received for information purposes only, as evidence calculations have been performed by individual meeting specified qualifications, and will be returned with "Engineer's Review Not Required."
7. All costs, associated with the review of any Shop Drawing resubmitted more than once shall be borne by the Contractor.
8. Transmittals of submittals which Engineers considers as "Not Required" submittal information, which is supplemental to but not essential to prior submitted information, or items of information in a transmittal which have been reviewed and received "No Exceptions" or "Furnish as Corrected" in a prior submittal, will be returned with "Engineer's Review Not Required."
9. Samples may be retained for comparison purposes.
   a. Remove samples when directed.
   b. Include in bid all costs of furnishing and removing samples.
10. Approved samples submitted or constructed, constitute criteria for judging completed work.

11. Finished work or items not equal to samples will be rejected.

THIS PAGE LEFT INTENTIONALLY BLANK

SP 4 RETAINING WALL - SMALL

PART 1 GENERAL

1.1 SECTION INCLUDES

A. Retaining wall materials and construction.

PART 2 MATERIALS

2.1 Wall units shall be Anchor Wall or approved equal. Contractor shall submit materials to be used for approval.

2.2 Materials for the block retaining wall shall meet the following requirements:

A. Block units shall conform to ASTM C1372 – Standard Specifications for Segmental Block Retaining Wall Units.

1. Minimum compression strength shall be 3,000 psi.
2. Maximum absorption shall be 8%.
3. Block unit color shall be regular concrete gray.
4. Block units shall be appropriate for the application shown on the Plans.
5. Blocks shall be interconnected to resist lateral pressure with minimum inter-unit shear strength of 1500 pounds per linear foot.
6. Exposed surfaced of units shall be free of chips, cracks, or other imperfections.
7. Required corners and cap units shall be finished on all exposed sides.

B. Shear Connectors shall meet the following requirements

1. Flexural strength in accordance with ASTM D4476: 128,000 psi minimum.
2. Short beam shear in accordance with ASTM D4475: 6,400 psi minimum.

C. Drain pipe, if required, shall be perforated PVC ASTM D-3034 or corrugated HDPE AASHTO M252.

D. Geosynthetic reinforcement, if needed, to be in accordance with manufacturer's specifications.

PART 3 WORKMANSHIP

3.1 GENERAL REQUIREMENTS

A. The Contractor shall submit a design appropriate for the wall application.

B. Contractor shall submit a Manufacturer's certification, prior to start of work, that the retaining wall system components meet the requirements of this specification and the structure design.

C. Install wall in accordance with manufacturer's specifications, local building codes and requirements.

D. Gravel backfill shall be in accordance with manufacturer's specifications.

E. Soil leveling pad shall be compacted to a minimum of 95% Standard Proctor density per ASTM D-698 or 92% Modified Proctor Density per ASTM D1557.

F. Place block retaining wall units, shear/connecting devices, and fill within and behind wall units in accordance with the manufacturer's recommendations.

G. Backfill shall be placed and compacted in lifts not to exceed six (6) inches to a minimum of 95% Standard Proctor density per ASTM D-698 or 92% Modified Proctor Density per ASTM D1557.

H. Cap units shall be glued to underlying units with an all-weather adhesive in accordance with manufacturer's recommendations.

I. Tolerances:

Vertical alignment: ± 1.5" over any ten (10) foot distance.

Horizontal alignment: ± 1.5" over any ten (10) foot distance.

The maximum horizontal gap between erected units shall be 1/2 inch.

PART 4 MEASUREMENT AND PAYMENT

4.1 Payment for retaining wall includes full compensation for providing materials, labor, tools and equipment necessary to complete the work.

B. Retaining Wall - Small: By the square foot of completed wall in place based on the finished face of wall.

3. Bid Schedule Payment Reference: SP 4.4.1.A.1.

4. Bid Schedule Description: Retaining Wall… square foot (SF).

C. Remove and Reset Retaining Wall: By the square foot of completed wall in place based on the finished face of wall.

1. Bid Schedule Payment Reference: SP 4.4.1.A.2.

2. Bid Schedule Description: Remove and Reset Retaining Wall… square foot (SF).

SP 5 SWPPP PREPARATION AND MANAGEMENT INCLUDING SITE CONTROL

PART 1 GENERAL

1.1 SECTION INCLUDES

A. Erosion control.

B. Temporary and permanent erosion control measures to prevent sedimentation of waterways, open drainage ways, and storm and sanitary sewers due to construction activities.

C. Restoration of areas eroded due to insufficient preventive measures.

D. Compensation of Owner for fines levied by authorities having jurisdiction due to non-compliance by Contractor.

E. Contractor's compliance with the February 10, 2022 Construction General Permit (CGP) most recent edition, Oil Pollution Prevention Regulation 40 CFR Part 112, and the Idaho State Water Quality Standards, including, but not limited to IDAPA 58.01.02.

F. Provided in this specification are penalties for non-compliance.

1.2 RELATED SECTIONS

A. Storm Water Pollution Prevention Plan (SWPPP) prepared for this project. (By Owner and Contractor)

1.3 PAY REDUCTIONS

A. When the Owner or Engineer finds the Contractor's operations to be in non-compliance with the CGP or the SWPPP, the Owner may choose to shut down all or part of the construction activities until the deficiencies are remedied. The Contractor will not be eligible for compensation for the shutdown.

B. Failure to comply with State or EPA requirements resulting in fines or penalties leveraged against the project by the State, EPA, or other a separate agency are in addition to the pay reductions described herein and are the sole responsibility of the Contractor.

C. Failure to comply with the CGP, as determined by the Owner or Engineer, will result in a reduction of the total contract amount in the following manner.

Non-Compliance Item	Pay Reduction per Item
Site disturbance prior to active NOI posted onsite	$500/day
Site disturbance prior to certifying the SWPPP	$500/day
Site disturbance prior to installing perimeter controls	$500/day
Failure to post NOI in location readable from public right of way	$500/day
Logs are not up-to-date in the SWPPP	$250/week
Copies of the inspection reports are not included in the SWPPP	$500/ea
Copy of the SWPPP is not retained onsite	$500/occurrence
Inspection report is not properly signed/certified	$50/ea
Control measures are not properly installed or maintained	$500/ea
Turbidity tests are not completed during inspections when turbidity is visible in runoff	$500/ea inspection
Control measures are not adequate to protect site	$500/day
When sediment is tracked offsite, it is not removed within the timelines in this specification or as noted in CGP, whichever is more strict	$500/ea/day
When sediment is tracked more than one block offsite, it is not removed within one hour of discovery	$100/ea/hour
Litter and/or construction debris not prevented from becoming a pollution source	$500/ea/day
Stabilization measures are not initiated within the window specified in the CGP after construction activities have permanently or temporarily ceased	$500/ea/day
Failure to provide Engineer documentation of a self-report to Federal and State authorities following a pollution discharge	$500/ea
Failure to provide archaeological monitoring of construction stormwater controls that require excavation during installation, if necessary	$500/ea

D. Outstanding items such as sediment control, signed inspection reports, or outstanding corrective action items at the time of a payment request may cause the payment request to be withheld until the items are addressed, at the option of the Owner or Engineer.

1.4 REFERENCES

A. ASTM D 4355 - Standard Test Method for Deterioration of Geotextiles by Exposure to Light, Moisture, and Heat in a Xenon Arc Type Apparatus; 2007.

B. ASTM D 4632 - Standard Test Method for Grab Breaking Load and Elongation of Geotextiles

C. ASTM D 4491 - Standard Test Methods for Water Permeability of Geotextiles by Permittivity; 1999a (Reapproved 2009).

D. ASTM D 4533 - Standard Test Method for Trapezoid Tearing Strength of Geotextiles; 2004 (Reapproved 2009).

E. ASTM D 4632 - Standard Test Method for Grab Breaking Load and Elongation of Geotextiles; 2008.

F. ASTM D 4751 - Standard Test Method for Determining Apparent Opening Size of a Geotextile; 2004.

G. ASTM D 4873 - Standard Guide for Identification, Storage, and Handling of Geosynthetic Rolls and Samples; 2002 (Reapproved 2009).

H. EPA (NPDES) - National Pollutant Discharge Elimination System (NPDES) Permit for Stormwater Discharges from Construction Activities, current edition.

I. Stormwater Pollution Prevention Plan as updated by Contractor.

J. FHWA FLP-94-005 - Best Management Practices for Erosion and Sediment Control; Federal Highway Administration.

K. Idaho's Department of Environmental Quality (IDEQ) Catalog of Stormwater BMPs for Idaho Cities and Counties, most recent edition.

L. Oil Pollution Prevention Regulation 40 CFR Part 112.

M. Idaho Transportation Department Best Management Practices Manual.

1.5 PERFORMANCE REQUIREMENTS

A. General Requirements

1. Contractor shall provide all labor, material and equipment necessary to comply with the Construction General Permit (CGP), Idaho State Water Quality Standards, including, but not limited to:

a. Preparing and managing the SWPPP document, site maps, and phasing diagrams

b. Subcontractor agreements

c. Delegation of authority forms

d. Certification of SWPPP operators

e. Submitting the Contractor's Notice of Intent (NOI) and tracking that each Operator has active and posted NOIs

f. Coordinating with utilities or other secondary operators on erosion and sediment control items

g. SWPPP Certification by all necessary parties

h. Training Contractor's staff

i. Selecting, installing, and maintaining temporary erosion and sediment control BMPs that are shown on the draft and final SWPPP or that are required to control erosion and sediment during construction.

j. Temporary and permanent slope stabilization. Multiple mobilization of temporary and permanent slope stabilization shall be anticipated to comply with the "7-day rule" in the CGP.

k. Updates to the SWPPP document, site maps, and stabilization exhibit as necessary. Also includes providing Engineer with a copy of all updates and reports as they are completed.

l. Complete and update logs required by the CGP, as necessary.

m. Certifying inspection reports (Owner to complete inspections)

n. Control of sediment and dust

o. Removal of BMPs no longer required in stabilized areas

p. Self-reporting of any known sediment discharge offsite

q. Turbidity testing (as required)

r. Filing of contractor Notice of Termination (NOT)

s. All other work required by the CGP and/or the SWPPP

t. Providing the Owner a complete copy of the final SWPPP paperwork upon completion of the project.

B. If there is a discrepancy among the project specifications, the CGP and/or the SWPPP, the requirements in the CGP and/or SWPPP (whichever is more stringent) shall govern.

C. Comply with all requirements of U.S. Environmental Protection Agency for erosion and sedimentation control, as specified for the National Pollutant Discharge Elimination System (NPDES), Phases I and II, under requirements for the February 10, 2022 Construction General Permit (CGP), whether the project is required by law to comply or not.

D. The Contractor is responsible for the site and permit coverage until final stabilization occurs. The Contractor shall maintain the site during winter shut down at no additional expense to the Owner. This includes, but is not limited to, inspections, turbidity testing, temporary stabilization, BMP maintenance, adding BMPs, maintenance of slopes, repairing BMPs that are damaged by the public or through winter maintenance activities, updating the SWPPP, and any other item required to comply with the requirements of this section.

E. Comply with all more stringent requirements of the project Stormwater Pollution Prevention Plan (SWPPP).

F. Comply with the Oil Pollution Prevention Regulation 40 CFR Part 112. The Contractor shall prepare a SPCC plan, at no additional cost to the Owner, and include it in the SWPPP appendices.

G. Update and comply with the SWPPP.

H. Do not begin clearing, grading, or other work involving disturbance of ground surface cover until applicable permits have been obtained (furnish all documentation required to obtain applicable permit) and all controls are installed and in working order.

I. Put preventive measures in place prior to disturbance of surface cover wherever feasible and before precipitation occurs.

J. Execute work by methods that minimize raising dust from construction and material handling operations. Do not cause runoff by excessively applying water for dust control.

1. Contractor shall provide watering of disturbed travel ways a minimum of once per day, including weekends, or as directed by Engineer to prevent air-borne dust from dispersing into the atmosphere and to preclude impacts to adjacent properties.
2. If at any time the Contractor does not respond to Engineer's request to water the disturbed travel ways within 4 hours, Owner shall arrange for a separate party to complete dust control. The cost associated with this work will then be deducted from contract unit price for erosion and sediment control.
3. Air monitoring may be required during the implementation of the project, pursuant to OSHA requirements.
4. Periodically inspect dust control measures; corrective measures shall be promptly applied.

K. Storm Water Runoff: Control increased storm water runoff due to disturbance of surface cover due to construction activities for this project.

1. Contractor shall comply with EPA's regulations regarding the Construction General Permit under NPDES.
2. All construction activities shall be in compliance with the "Catalog of Storm Water Best Management Practices for Idaho Cities and Counties" by IDEQ.
3. If refueling of equipment or storage of oil or other petroleum products will occur onsite, comply with 40 CFR 112 and Section 311.
4. Under no circumstances shall it be acceptable for uncontrolled sediment to leave the construction site.
5. Contractor is responsible for making sure all temporary erosion controls for a segment are in place and have been verified by the Engineer prior to breaking ground on any segment of the project.
6. If temporary erosion controls are found to be unacceptable at any time in the project, either in its installation or maintenance, Engineer shall stop work until the problem is corrected. Any delays experienced due to improper erosion control shall be at the Contractor's expense. If Contractor does not correct the problem immediately, the Owner will have it corrected by others and deduct the cost from the contract amount.
7. No off-site tracking will be allowed. Where local traffic is allowed throughout the site, a clean travel lane must be maintained.
8. Contractor shall not flush chlorinated waterlines into uncontrolled areas such as those near culverts, lakes, streams. Contractor shall dechlorinate waterlines prior to (or during) flushing and shall flush lines only in areas pre-approved by the Engineer.

9. Prevent runoff into storm and sanitary sewer systems, including open drainage channels, in excess of actual capacity or amount allowed by authorities having jurisdiction, whichever is less.
10. Anticipate runoff volume due to the most extreme short term and 24-hour rainfall events that might occur in 25 years.

L. Water Control:

1. Grade site to drain.
2. Maintain excavations free of water.
3. Operate and maintain pumping equipment as required.
4. Protect site from puddling or running water.
5. Maintain water barriers, as required, to protect site from soil erosion.
6. Periodically inspect water control measures; corrective measures shall be promptly applied.
7. Turbidity testing is required whenever runoff leaving the site is visibly turbid.

M. Erosion Control:

1. Plan and execute construction by methods to control surface drainage from cut and fill, borrow material handling, and waste disposal areas.
2. Apply hydro-seed or mulch to disturbed areas.
3. Implement temporary measures, such as berms, dikes, and drains, to prevent water flow.
4. Construct fill and waste areas by selective placement to avoid erosive surface silts or clays.
5. Prevent sediment from leaving the controlled site. Under no circumstances shall sediment be allowed to enter creeks or streams.
6. Inspect erosion control measures before breaking ground each day; corrective measures shall be immediately applied.

N. Erosion On Site:

1. Minimize wind, water, and vehicular erosion of soil on project site due to construction activities for this project.
2. Plan and execute construction by methods to control surface drainage from cut and fill, borrow material handling, and waste disposal areas.
3. Apply hydro-seed to disturbed areas.
4. Implement temporary measures such as berms, dikes, and drains, to prevent water flow.
5. Construct fill and waste areas by selective placement to avoid erosive surface silts or clays.
6. Prevent sediment from leaving the controlled site. Under no circumstances shall sediment be allowed to enter surface water.

7. Inspect erosion control measures before breaking ground each day; corrective measures shall be promptly applied.
8. Control movement of sediment and soil from temporary stockpiles of soil.
9. Prevent development of ruts due to equipment and vehicular traffic.
10. If erosion occurs due to non-compliance with these requirements, restore eroded areas at no cost to Owner.
11. If erosion occurs onsite, remove rills, gullies, and sediment deposits as soon as possible and repair and/or re-evaluate the effectiveness of BMPs.

O. Tracking Off-Site: Prevent erosion of soil and deposition of sediment on other properties caused by water leaving the project site due to construction activities for this project or from tracking.

1. Prevent windblown soil from leaving the project site.
2. Prevent tracking of mud or sediment onto public roads outside site.
3. Prevent mud and sediment from flowing onto sidewalks, driveways and pavements.
4. If erosion occurs due to non-compliance with these requirements, restore eroded areas at no cost to Owner.
5. Tracking off-site must be cleaned with a vacuum truck by the end of the same day.
6. Tracking off-site that extends more than one-block from the project site, shall be cleaned with a vacuum truck within an hour of discovery. Tracking of this sort, also requires immediate re-evaluation of the construction entrance or wheel wash BMPs.

P. Miscellaneous Surface Restoration:

1. Contractor shall carefully document, including taking pictures, the pre-construction condition of landscaping, signs, power poles and other utilities prior to beginning construction.
2. Any landscaping, mailboxes, signs, power poles, or utilities removed during construction must be restored to match their pre-construction condition.
3. Restoration of disturbed areas shall be completed to the satisfaction of the Owner and Engineer.

Q. Health and Safety:

1. Plan and execute health and safety control measures in accordance with all local, state, and federal requirements.
2. Periodically review health and safety measures; corrective measures shall be promptly applied.

R. Sedimentation of Waterways On Site: Prevent sedimentation of waterways on or near the project site, including rivers, streams, lakes, ponds, open drainage ways, storm sewers, and sanitary sewers.

1. If sedimentation occurs, install or correct preventive measures immediately at no cost to Owner; remove deposited sediments; comply with requirements of authorities having jurisdiction.

2. If sediment basins are used as temporary preventive measures, pump dry and remove deposited sediment after each storm.

S. Sedimentation of Waterways Off Site: Prevent sedimentation of waterways off the project site, including rivers, streams, lakes, ponds, open drainage ways, storm sewers, and sanitary sewers.

1. If sedimentation occurs, install or correct preventive measures immediately at no cost to Owner; remove deposited sediments; comply with requirements of authorities having jurisdiction.

T. Open Water: Prevent standing water that could become stagnant.

U. Maintenance: Maintain temporary preventive measures until permanent measures have been established.

V. BMPs shown in the draft SWPPP prepared by the Engineer is the minimum erosion control effort envisioned. <u>In the event that the controls shown in the final SWPPP are not adequate to control site erosion and sedimentation, the Contractor must provide additional controls at no additional expense to the Owner.</u>

W. Temporary Soil Stabilization: The "7-day rule" in the CGP will be strictly enforced. The Contractor shall stage Work to minimize the disturbance of soils that will not be actively under construction. Soils that are disturbed will be stabilized within 7-days of active work ceasing in the area. Contractor shall plan for multiple mobilizations of temporary stabilization to comply with this requirement.

1.6 SUBMITTALS

A. Contractor shall submit proposed stockpile and/or staging area locations and planned site control for review and approval.

B. The Owner will provide a draft SWPPP for the Contractor's use. The draft SWPPP contains information about the project site characteristics, drainage patterns, and anticipated BMPs. The draft SWPPP will be based on the EPA's template for unauthorized states. A digital file will be provided upon Notice of Award. The draft SWPPP is for the Contractor's convenience. Use of the draft SWPPP does not transfer any risk or responsibility to the Owner or the Engineer.

C. The Contractor shall finalize the SWPPP. Prior to the preconstruction conference, the Contractor shall submit the final SWPPP to the Engineers for review for general conformance with the CGP. This review shall not release the Contractor from liability or fines resulting from an EPA or State inspection and/or audit. Once the SWPPP is approved by the Engineer, the Contractor shall submit the NOI to the EPA. Notice to Proceed will not be

issued until Notice of Intent has been filed by Contractor and SWPPP has been completed by Contractor, approved by the Engineer and signed.

D. The SWPPP is considered a living document and the Contractor should anticipate updating the document and modifying site controls as needed during the course of construction.

E. The SWPPP shall be certified by a Contractor's Representative meeting the definition of an Operator in the CGP. This will include, at a minimum, the Contractor and the Owner. Contractor is responsible for identifying any other Operators and assuring that they have certified the SWPPP and filed NOIs, if required.

F. Prior to initiating any construction activity, the Contractor shall designate a Water Pollution Control contact. Contact information including name, address, and telephone number shall be submitted to the Owner. The contact shall be certified by the Stormwater Erosion Education Program (SEEP), or other equivalent program approved by the Engineer. The contact shall be responsible for ensuring compliance with the Clean Water Act, the CGP, and the SWPPP, and shall be responsible for regular communication with the Engineer and Owner regarding erosion and sediment control issues.

1. The Panhandle Health District Stormwater & Erosion Education Program (SEEP) certification, Washington Department of Ecology (DOE) Certified Erosion & Sediment Control Lead (CESCL), and Idaho Transportation Department (ITD) "E. npdes" qualification are erosion and sediment control training programs that are preapproved by the Engineer.

PART 2 MATERIALS

2.1 MATERIALS

A. Best management practices (BMPs) products and materials shall be selected in accordance with the IDEQ Catalog of Stormwater BMPs for Idaho Cities and Counties, or as recommended.

B. Products for temporary slope stabilization during winter shutdown where the permanent control is hydroseed or sod per the Plans are allowed as follows:

1. Bonded fiber matrix (BFM) applied at a rate of 3,500 pounds per acre minimum with the following mix characteristics: 90% thermally refined wood fiber, 10% blended multi-dimensional hydro-colloid based tackifier, and 10% - 13% moisture.

2. Erosion control blanket meeting the requirements of the IDEQ BMPs.

3. Type A3 ¾" crushed aggregate per Section 802 placed 3-inches thick minimum

4. Other submitted BMP as approved by Engineer.

PART 3 WORKMANSHIP

3.1 EXAMINATION

A. Examine site and identify existing features that contribute to erosion resistance; maintain such existing features to greatest extent possible.

B. The Owner/Engineer will inspect the site at a minimum once every seven (7) days and within 24 hours of a storm event of 0.25 inches or greater, unless this requirement has been changed in the SWPPP due to an approved winter shutdown where the site is temporarily stabilized. The day of the week will be selected at the pre-construction meeting. Inspections shall occur on the selected day in each week regardless of intermittent inspections. The Owner/Engineer shall coordinate the inspection with the Contractor. The Contractor shall be given the opportunity to be present during the inspection.

C. The Contractor shall correct all deficiencies identified during the inspection as soon as possible and no later than five (5) days after the inspection or prior to the next forecasted rain event, whichever is sooner.

3.2 PREPARATION

A. At all times, the NOI and project sign (as required by the CGP) shall be posted in a location that is readable from the public right of way. This board shall have the phone number of Contractor and Contractor's permit number clearly visible from the public right of way.

B. Schedule work so that soil surfaces are left exposed for the minimum amount of time.

C. Phase work to stabilize exposed soils in accordance with the CGP. The Contractor should not assume hydroseeding of slopes will occur at one time. The Contractor either temporarily or permanently stabilizes slopes as they are completed and always in accordance with the time constraints in the CGP.

D. The public utility Work shall be included in the project SWPPP. The Contractor shall coordinate with the public utilities, as necessary, to complete project-wide inspections and updates to the utility portions of SWPPP.

3.3 SCOPE OF PREVENTIVE MEASURES

A. Contractor must stockpile or have in their possession erosion and sediment control measures that can be utilized to immediately minimize the discharge of pollutants offsite in an emergency situation including, but not limited to, a water line break or an unexpected storm event.

B. In all cases, if permanent erosion resistant measures have been installed temporary preventive measures are not required.

C. Temporary soil stabilization criteria, as defined in the CGP, will be strictly enforced. The Contractor should plan for several mobilizations to apply mulch or other temporary stabilization BMPs. Soils left un-worked and disturbed longer than permitted in the CGP will not be permitted.

3.4 INSTALLATION

A. Silt Fences:

1. J-hook ends of silt fence uphill to prevent runoff from running around the end of silt fence.

2. At joints, wrap and secure ends of silt fence around a t-post to eliminate runoff passage through the joint.

3.5 MAINTENANCE

A. Inspect preventative measures at the frequency specified within the SWPPP and in accordance with IDEQ Catalog of Stormwater BMPs for Idaho Cities and Counties, or as recommended by other local entities or guidance documents.

B. Repair deficiencies immediately, in accordance with the project SWPPP and the CGP.

C. Complete corrective actions to correct all identified deficiencies in accordance with the project SWPPP and the CGP.

3.6 CLEAN UP

A. Remove temporary measures after permanent measures have been installed, unless permitted to remain by Engineer.

B. Clean out temporary sediment control structures that are to remain as permanent measures.

C. Where removal of temporary measures would leave exposed soil, shape surface to an acceptable grade and finish to match adjacent ground surfaces.

D. File Notice of Termination once site has been permanently stabilized, as approved by the Engineer.

PART 4 MEASUREMENT AND PAYMENT

4.1 SECTION INCLUDES

A. SWPPP Preparation & Management incl. Site Control: By the lump sum. Includes full compensation for all materials, labor and equipment necessary for completing the work and all appurtenances not itemized in the Bid Schedule.

1. Bid Schedule Payment Reference: SP 6.4.1.A.1.

2. Bid Schedule Description: SWPPP Preparation & Management incl. Site Control… lump sum (LS).

THIS PAGE LEFT INTENTIONALLY BLANK

SP 6 ORNAMENTAL FENCE

PART 1 GENERAL

1.1 SECTION INCLUDES

A. Materials and installation of ornamental fence.

1.2 SUBMITTALS

A. Submit shop drawings and manufacturer's cut sheets for materials to be installed under this section.

B. Submit warranty for all supplied materials and workmanship for a period of at least one year from final acceptance. The warranty must state that the products supplied were free of defects and suitable for the uses set forth in the Specifications.

1.3 DELIVERY, STORAGE, AND HANDLING

A. Deliver, store, and handle materials in accordance with the manufacturer's recommendations to prevent damage or excessive exposure to weather.

1.4 INSPECTIONS

A. Visual confirmation of the backfill compaction around foundations.

B. Final inspection shall be to verify the fence is installed plumb and free of defects or damage during the installation.

PART 2 MATERIALS

2.1 ORNAMENTAL FENCE

A. To be Ameristar Fence: Montage Plus Majestic 3-Rail or Approved Equal.

2.2 CONCRETE FOUNDATIONS

A. Concrete to be Class 3000 psi meeting the requirements of Section 703 – Cast-in-Place Concrete.

PART 3 WORKMANSHIP

3.1 GENERAL REQUIREMENTS

A. Install ornamental fence in accordance with manufacturer's specifications.

B. Where necessary, Contractor shall core drill and grout posts into retaining wall per the plans. Otherwise, Contractor shall provide concrete foundations per manufacturer's specifications.

PART 4 MEASUREMENT AND PAYMENT

4.1 Payment for Ornamental Fence includes full compensation for providing materials, labor, tools and equipment necessary to complete the work.

A. Ornamental Fence: By the linear foot of completed fence in place.

1. Bid Schedule Payment Reference: SP 7.4.1.A.1.

2. Bid Schedule Description: Ornamental Fence… linear foot (LF).

THIS PAGE LEFT INTENTIONALLY BLANK

SECTION 5

CITY OF MOSCOW
QUALITY CONTROL

CITY OF MOSCOW QUALITY CONTROL

CITY OF MOSCOW **Quality Control**

CITY OF MOSCOW Reference	Item or Material	Qualifier	Test Type	Test Method or Reference	Minimum Acceptance Criteria	Minimum Testing Frequency (5)
EARTHWORK						
ES-5	**Top 12 inches of Subgrade**	**Material is not too granular to test**	Compaction	AASHTO T 310	95 percent of AASHTO T 99 95 percent of Idaho T 74	1 test per each 300 linear feet of roadway. 1 test per 10,000 square feet of general fill area.
		Material is too granular to test	Compaction	ES-5	Lift Thickness (min. 8" loose) and Passes Specified (min. 12 vibratory with roller capable of 30k lbs / impact dynamic force)	Observation.
ES-5	**Embankment and General Fill**	**Material is not too granular to test**	Compaction	AASHTO T 310	95 percent of AASHTO T 99 95 percent of Idaho T 74	1 test per 8-inch lift per each 300 linear feet of roadway.1 test per 10,000 square feet of general fill and embankment areas.
		Material is too granular to test	Compaction	ES-5	Lift Thickness (min. 8" loose) and Passes Specified (min. 12 vibratory with roller capable of 30k lbs / impact dynamic force)	Observation.
ES-5	**Backfill**	**Trenches**	Compaction	AASHTO T 310	95 percent of AASHTO T 99	Horizontal Location: Test at start of trench with subsequent tests a maximum of every 500 feet. Test a minimum of 2 locations in trenches greater than 100 feet but less than 500 feet in length. Vertical Location: At every horizontal location, test the first lift of fill and every 18 vertical inches of fill. Also test the fill at the top of the trench.
ES-5					95 percent of Idaho T 74	

Quality Control

CITY OF MOSCOW Reference	Item or Material	Qualifier	Test Type	Test Method or Reference	Minimum Acceptance Criteria	Minimum Testing Frequency (5)
TRENCHING						
ES-20	**Bedding**	**Pipe Zone**	Compaction	Most Recent Edition of ISPWC Division 400 or Approved Plans		
ES-19	**Trench Bottom**	**Trenches**	Compaction	AASHTO T 310	95 percent of AASHTO T 99	None.
ES-19	**Class A Backfill**	**Lower Zone** **Upper Zone (topsoil)**	Compaction	AASHTO T 310	92 percent of AASHTO T 99 90 percent of AASHTO T 99	Horizontal Location: Every 50-100 linear feet Vertical Location: 8" maximum lifts.
ES-19	**Class B Backfill**	**Lower Zone** **Upper Zone**	Compaction	AASHTO T 310	95 percent of AASHTO T 99 95 percent of AASHTO T 99	Horizontal Location: Every 50-100 linear feet Vertical Location: 8" maximum lifts.
ES-19	**Class C Backfill**	**Trench Zone**	Compaction	AASHTO T 310	95 percent of AASHTO T 99	None.
ES-19	**Class D Backfill**	**Trench Zone Rolling**	Compaction	AASHTO T 310	95 percent of AASHTO T 99	Horizontal Location: Every 50-100 linear feet Vertical Location: 8" maximum lifts.
ES-19	**Class E Backfill**	**Lower Zone** **Upper Zone**	Compaction	AASHTO T 310	95 percent of AASHTO T 99	Horizontal Location: Every 50-100 linear feet Vertical Location: 8" maximum lifts.
ES-19	**Class F Backfill**	**Trench Zone Rolling**	Compaction	AASHTO T 310	95 percent of AASHTO T 99	Horizontal Location: Every 50-100 linear feet Vertical Location: 8" maximum lifts.

Quality Control

CITY OF MOSCOW Reference	Item or Material	Qualifier	Test Type	Test Method or Reference	Minimum Acceptance Criteria	Minimum Testing Frequency (5)
WATER						
ES-20	**Water Pipe**	**HDPE Pipe**	Hydrostatic Pressure	MOST RECENT EDITION OF ISPWC OR APPROVED PLANS		
		All Other Pipe Materials				
ES-20		**Prior to Disinfection; After Pressure Test**	Flushing Velocity			
ES-20		**Disinfection via Chlorination**	Tablet/Granular			
			Continuous Feed			
			Slug Method			
ES-20		**After Final Flushing**	Bacteriological			
ES-20	**Hydrants**	**All Hydrants**	Disinfect and Flush			
ES-20			Pressure			
			Drainage			
ES-20	**Water Service Pipe**	**All Water Service Pipe**	Disinfection			

Quality Control

CITY OF MOSCOW Reference	Item or Material	Qualifier	Test Type	Test Method or Reference	Minimum Acceptance Criteria	Minimum Testing Frequency (5)
SEWER						
ES-20	**Sewer Pipe**	**All Pipe**	Visual Inspection	MOST RECENT EDITION OF ISPWC OR APPROVED PLANS		
		All Pipe	Low Air Pressure (Exfiltration Test)			
		All Flexible Pipe	Deflection			
		All Pipe	Closed Circuit Television (CCTV) Inspection			
ES-18	**Sewer Manholes**	**All Manholes**	Hydrostatic Test	ES-18	Allowable leakage over allowable time period	Until passing test is achieved.

Quality Control

CITY OF MOSCOW Reference	Item or Material	Qualifier	Test Type	Test Method or Reference	Minimum Acceptance Criteria	Minimum Testing Frequency (5)
CONCRETE						
ES-11 thru ES-14	**Concrete**	**Temperature at point of delivery**	None.	Not Cold Weather	80F Max	Minimum 2 tests daily.
				Cold Weather	50F Minimum	
ES-11 thru ES-14	**Concrete**	**Making and Curing Strength Specimens**	AASHTO T 23	Not Cold Weather	None.	1 test (3 specimens at 1-7 day, 2-28 day)/100 cubic yards, but no less than 3 tests per project
				Cold Weather	None.	1 test (4 specimens at 1-7 day, 3-28 day)/100 cubic yards, but no less than 3 tests per project
ES-11 thru ES-14	**Concrete**	**Slump**	AASHTO T 119	Class 40B or as specified in Contract.	Maximum 5 inches	First truck load, then for every 100 or less cubic yards of each class of concrete placed, but no less than 3 tests per project.
					Maximum 3 inches for Curb	
ES-11 thru ES-14	**Concrete**	**Air Content**	AASHTO T 152	Class 40B or as specified in Contract.	6.5 ± 1.5 percent	

Quality Control

CITY OF MOSCOW Reference	Item or Material	Qualifier	Test Type	Test Method or Reference	Minimum Acceptance Criteria	Minimum Testing Frequency (5)
DIVISION 800 - AGGREGATES AND ASPHALT						
ES-7	**Crushed Aggregate**	**None.**	Compaction	AASHTO T 310	95 percent AASHTO T 99 95 percent Idaho T 74	1 test per lift per 300 linear feet of roadway or 10,000 square feet of general fill and embankment.
ES-7		**None.**	Sampling	AASHTO T 2	Samples meet project requirements for gradation, sand equivalency, and fractured faces.	1 sample per each 1,000 tons delivered to the jobsite.
ES-15	**Plant Mix Cold Feed**	**None.**	Sampling	AASHTO T 2	Samples meet project requirements for gradation, sand equivalency, and fractured faces.	1 test per each 1,500 tons of plant mix produced.
ES-15	**Plant Mix HMA**	**None.**	Sampling	ISPWC 810.3.12A	Samples meet project requirements for asphalt cement content and gradation	1 sample per 750 tons produced or fraction thereof. Minimum of 1 sample per day.
	In-Place Plant Mix HMA	**Acceptance by cores.**	Compaction Testing	AASHTO T 166	92.0 to 96.0 percent of AASHTO T 209	Randomly at one core per 300' of roadway and 12 inches from joints. Not required for plant mix leveling course or temporary pavement.
		Correlated nuclear densometer.	Compaction Correlation	WAQTC TM8/ AASHTO T 166	None.	Recommended contractor establishes own QC for asphalt compaction and roller patterns
			Compaction Testing	WAQTC T M8	91.0 to 96.0 percent of AASHTO T 209	
ES-15	**In-Place Plant Mix HMA**	**None.**	Smoothness	ISPWC 810.3.13.A	0.25 inches in 10 feet	Randomly.

APPENDIX 1:

Alta Science & Engineering Inc. Special Provisions

Lilly St. and First Street Improvements Special Provisions – Stream Daylighting

Final

Prepared for:
Welch Comer Engineers & Surveyors
330 E. Lakeside Ave., Suite 101
Coeur d'Alene, ID 83814

December 29, 2020

Prepared by:
Alta Science and Engineering, Inc.
220 East Fifth Street, Suite 325
Moscow, Idaho 83843
alta-se.com

Alta
Science & Engineering, Inc.

Contents

Section 1 Incidentals 1
Section 2 Bid Items 1
2.1 Bid Item 1: Design Channel 1
2.2 Bid Item 2: Concrete Block Retaining Wall 3
2.3 Bid Item 3: Revegetation Planting 5
2.4 Bid Item 4: Revegetation Seeding and Mulching 7
2.5 Bid Item 5: Water Management 8
2.6 Bid Item 6: Provide Water 9
~~2.7 Bid item 7: Lilly St. Crossing Structure ..... 11~~

Section 1 Incidentals

The Work Description, Measurement, and Payment section below does not necessarily name all the incidental items and tasks required by the Contract Documents to complete the Work. Incidentals are Work activities, labor, materials and/or tools, and equipment necessary to complete the Work for which there is no additional charge to the Owner. The cost of all such incidentals shall be included in the various related Bid Item(s).

Several known incidentals to the Work are described as follows.

Weed Control:

During construction operations, the Contractor shall control the spread of noxious weeds within, onto, and from the Site in accordance with the following stipulations. Specifically, the Contractor shall:

- Decontaminate all construction equipment including vehicles, heavy equipment, and pumps to prevent the spread of noxious weeds by cleaning with high-pressure water before moving equipment into the Site. Only clean construction equipment inspected by the Restoration Engineer will be allowed to operate within the work area.
- Decontaminate each piece of equipment used coming from established haul and access routes each time it enters the Site if it has been used at sites other than the construction area since it was last decontaminated.
- Clean all wheels, tracks, undercarriages, fenders, blades, buckets, and the exterior body of vehicles/equipment to remove any weed seeds, fuel, and oil prior to entering the Site.

Turbidity:

All state and local water quality regulations will be met. The Contractor will limit turbidity by strategic location of equipment away from any flowing water. Damage to riparian areas shall be avoided wherever possible. State of Idaho (IDAPA 58.01.02 page 148(e)) Department of Environmental Quality turbidity criterion for water quality standards are as follows: Turbidity, below any applicable mixing zone shall not exceed background turbidity by more than fifty (50) NTU instantaneously or more than twenty-five (25) NTU for more than ten (10) consecutive days and/or for up to 3 continuous hours. Contractor shall be held to this standard and shall cease in-stream work in the case of a violation. Activities will be allowed to proceed once the turbidity returns to background levels or 10 NTUs. Turbidity monitoring, including personnel and equipment, will be provided by the Contractor.

Section 2 Bid Items

2.1 Bid Item 1: Design Channel

General

This Bid Item includes all Work necessary to construct the Design Channel of Hog Creek, in the locations shown on the Drawings (Sheet CR1). There are approximately 265 linear feet of Design Channel. Rock armoring is located along the toe of the design channel, where the Hog Creek Design Channel enters and exits conveyance structures, as indicated on the Drawings.

Materials

- Contractor shall provide all materials necessary to complete the Work as specified.
- ASTM R-60 rock armoring meeting the following gradation:

Mass (lbs.)	% Lighter
150	100
60	50-100
30	15-50
10	0-15

- Native topsoil (if available) or imported topsoil as specified in the City of Moscow Standard Construction Specifications, Section ES-27.
- Stream Channel Substrate shall meet the following requirements:
    - D50 = 5 inches
    - Minimum 15% Fines
- Topsoil shall consist of natural, friable soil that is representative of soils in the vicinity that produce heavy vegetation growth and is reasonably free from underlying subsoil, clay lumps, cobbles or boulders, noxious weeds, litter, brush, and matted roots.
- Seed and plant as specified in Bid Items 3 and 4.

Execution

Work includes, at a minimum:

- Contractor shall complete all excavation as specified under the City of Moscow Standard Construction Specifications, Section ES-5.
- Construct Concrete Block Retaining Wall in accordance with Bid Item 2: Concrete Block Retaining Wall.
- Place channel substrate and rock armoring in the locations shown on the Drawings and described herein.
- Place a first layer of channel substrate of approximate D50 thickness, then place the top layer with surface rocks that are largely D50 or greater, filling voids as necessary with smaller substrate. The mixture shall be consolidated by large vibratory equipment or bucket to create a tight, dense, interlocking mass.
- Shape channel substrate into the low flow channel as shown on Drawings Sheet CR2, smoothly tying channel substrate into 2:1 slope topsoil.
- The channel substrate shall be further wetted to encourage voids filling with fines.
- Any large voids shall be filled with rock and small voids filled with soil.
- Excessively thick zones of fine substrate prone to washing away shall not be created (for example, no thicknesses greater than 6 inches).
- The final surface shall be thoroughly wetted for washing of fines into void spaces in accordance with Bid Item 6: Provide Water.
- Place topsoil on 2:1 slope. Topsoil shall be loosely placed and distributed to a uniform thickness to facilitate revegetation.
- Seed and plant the 2:1 slope in accordance with Bid Items 3 and 4.

Measurement

Measurement for Design Channel will be by the actual number of linear feet installed, as measured by Engineer.

Payment

Payment for Bid Item 1: Design Channel will be based on the unit price bid linear foot as shown on the Bid Form of the Contract Documents.

2.2 Bid Item 2: Concrete Block Retaining Wall

This Bid Item includes all Work necessary to construct the Concrete Block Retaining Wall as shown on the Drawings (Sheets CR1 and CR2).

Materials

- Contractor shall provide the necessary materials to complete the Work as described below and as shown on the Drawings (Sheet CR2).
- Drain rock shall be uncrushed aggregate meeting the following gradation:

Sieve Size	% Passing
3 inch	100
1 inch	25-60
3/8 inch	0-4
No. 200	0-2

- Nonwoven geotextile filter fabric meeting the physical properties listed below:

Mechanical Property	Test Method	Unit	Minimum Average Roll Value	
			MD	CD
Grab Tensile	ASTM D4632	lb	115	115
Puncture Resistance	ASTM D4833	lb	45	45
Trapezoid Tear Strength	ASTM D4533	lb	45	45
Apparent Opening Size	ASTM D4751	U.S. Sieve	70	
Flow Rate	ASTM D4491	gal / min / sq. ft.	120	

- ¾-inch minus crushed gravel as specified in the City of Moscow Standard Construction Specifications, Section ES-7.
- Precast concrete retaining blocks, block size and schedule as designed by manufacturer. Concrete retaining blocks shall be Redi-Rock cobblestone finish or equivalent. Contractor shall submit to Engineer for approval prior to purchase.
- 4” diameter perforated PVC drain pipe (see City of Moscow Standard Construction Specifications, Section ES-20 for pipe).

- Native backfill.

Execution

Work includes, at a minimum:

- Contractor shall submit manufacturer-designed and stamped drawings of the Concrete Block Retaining wall to the Engineer.
- Contractor shall procure a manufacturer-designed Concrete Block Retaining Wall (Redi-Rock or equivalent) to the dimensions and criteria shown on the Drawings (Sheet CR1 and Sheet CR2).
- Contractor shall refer to manufacturer's installation instructions for construction of Concrete Block Retaining Wall.
- Contractor shall clear and grub retaining wall area (see the Drawings, Sheet CR1) and dispose of materials unsuitable for replacement.
- Contractor shall complete all excavation as specified under the City of Moscow Standard Construction Specifications, Section ES-5.
- Contractor shall flatten and compact subgrade area to 95% Standard Density AASHTO T-99 prior to placing geotextile as described in the City of Moscow Standard Construction Specifications, Section ES-7.
- Contractor shall install geotextile material as shown on the Drawings (Sheet CR2).
- Contractor shall place ¾" gravel overlaying the geotextile material as specified in the City of Moscow Standard Construction Specifications, Section ES-7.
- Contractor shall compact the gravel to a 24" finished thickness.
- Compaction shall be as specified in the City of Moscow Standard Construction Specifications, Section ES-7.
- Contractor shall install concrete blocks as shown on the Drawings (Sheets CR1 and CR2).
- Contractor shall install drain rock and perforated drain pipe behind the concrete blocks to the thickness and depth as shown on the Drawings (Sheet CR2 and CR4).
- Contractor shall daylight perforated drain pipe to the front side of wall as shown on the Drawings (Sheet CR2 and CR4).
- Contractor shall wrap drain rock in geotextile as shown on the Drawings (Sheet CR2).
- Contractor shall backfill the retaining wall with compacted native backfill.
- Contractor shall finish native backfill with seed in accordance with Bid Item 4: Seeding and Mulching.
- Contractor shall take special care to work around all utilities in the proximity to retaining wall.
- Contractor shall coordinate this Work with Bid Item 1: Channel Construction and Bid Item: Shared Use Path.

Measurement

Measurement for Bid Item 2: Concrete Block Retaining Wall will be by the actual number of square-foot face (to the nearest square-foot) of Concrete Block Retaining Wall installed, including any portions embedded below ground, as measured by Engineer.

Payment

Payment for Bid Item 2: Concrete Block Retaining Wall will be based on the unit price bid per square-foot face as shown on the Bid Form of the Contract Documents. This price shall

constitute full compensation for all labor, equipment, tools, supplies, materials, and incidentals necessary to accomplish the Work.

2.3 Bid Item 3: Revegetation Planting

Description

This Bid Item includes all work necessary to revegetate the channel and surrounding areas with native plants including herbaceous plants, trees, and shrubs. Under this Bid Item, Contractor shall perform specified planting for adequate establishment. Contractor shall submit to Engineer all product data and information from suppliers regarding furnished plant material utilized for the Work. All revegetation shall be completed as soon as possible after construction is complete in the mitigation area. Contractor shall schedule and complete Project Work as appropriate to ensure that no planting is conducted when the ground is frozen.

In order to prepare the subgrade for revegetation, the soil surface after final grading should have microtopographic relief for seed retention and to impede stormwater runoff and erosion. Contractor shall rake the ground surface in all seeding areas such that randomly directed ridges are present prior to planting and seeding. If using any tool other than a hand rake, care must be taken to avoid ridges or valleys that have vertical side slopes, are longer than a few feet, or deeper than 6 inches.

Materials

Following completion and approval of final grades, Contractor shall plant a total of 70 live containerized woody plants and 1,100 live containerized herbaceous plants in a variety of species and in plantings zones as delineated on the Drawings Sheet CR3 and according to Table 1 and Table 2. Nursery stock shall be certified weed free and non-native vegetation species shall not be allowed. All nursery stock shall be capable of growth and rooting and free of disease or defects at the time of installation. Engineer shall be present on-site during installation of plants.

Table 1. Woody Plant Species and Numbers

Species	Common Name	Zone	Minimum Number	Maximum Number	Minimum Plant Size
Cornus stolonifera	Red Osier Dogwood	A	2	5	1 Gal
Salix drummondii	Drummond Willow	A	2	5	1 Gal
Salix exigua	Coyote Willow	A	2	5	1 Gal
Alnus incana	Thinleaf Alder	A	2	5	1 Gal
	Total Zone A Plants		**10**		
Acer glabrum	Rocky Mt. Maple	B	0	20	40 CI
Amelanchier alnifolia	Serviceberry	B	0	10	40 CI
Philadelphus lewisii	Syringa (Mockorange)	B	0	10	40 CI
Prunus virginiana	Chokecherry	B	10	20	40 CI
Ribes aureum	Golden Current	B	0	10	40 CI
Rosa nutkana	Nootka Rose	B	0	5	40 CI
Spirea douglasii	Douglas Spirea	B	0	20	40 CI
Symphoricarpos albus	Common Snowberry	B	10	30	40 CI
Populus tremuloides	Quaking Aspen	B	0	10	40 CI
Populus trichocarpa	Black Cottonwood	B	0	10	40 CI
	Total Zone B Plants		**60**		

Notes: CI – Cubic Inch; GAL = Gallon

Table 2. Herbaceous Plant Species and Numbers

Species	Common Name	Zone	Minimum Number	Maximum Number	Minimum Plant Size
Carex spp (min 2 species)		A	60	100	10 CI
Carex aquatilis	Water Sedge	A			
Carex lenticularis	Lens Sedge	A			
Carex nebrascensis	Nebraska Sedge	A			
Carex utriculata	Beaked Sedge	A			
Eleocharis palustris	Creeping Spikerush	A	0	30	10 CI
Glyceria occidentalis	Western Mannagrass	A	0	30	10 CI
Glyceria striata	Fowl Mannagrass	A	0	30	10 CI
Juncus spp. (min 2 species)		A	30	100	10 CI
Juncus balticus	Baltic Rush	A			
Juncus effusus	Common Rush	A			
Juncus ensifolius	Daggerleaf Rush	A			
Juncus tenuis	Slender Rush	A			
Scirpus acutus	Hardstem Bulrush	A	0	30	10 CI
Scirpus microcarpus	Small-fruited Bulrush	A	20	30	10 CI
	Total Zone A Plants		**170**		
Fragaria virginiana	Wild Strawberry	B	0	50	10 CI
Gaillardia aristata	Blanket Flower	B	0	100	10 CI
Geranium viscosissimum	Sticky Geranium	B	50	150	10 CI
Geum triflorum	Prairie Smoke	B	50	150	10 CI
Koeleria macrantha	Prairie Junegrass	B	50	150	10 CI
Linum lewisii	Blue Flax	B	50	150	10 CI
Lupinus sericeus	Blue Lupine	B	50	150	10 CI
Penstemon attenuatus	Taperleaf Penstemon	B	50	150	10 CI
Solidago canadensis	Canadian Goldenrod	B	50	150	10 CI
Solidago missouriensis	Missouri Goldenrod	B	50	150	10 CI
	Total Zone B Plants		**930**		
		TOTAL	**1,100 Plants**		

Notes: CI – Cubic Inch

Execution

Plants shall not be subjected to cold or excessive heat or drying during transport, storage, and planting. The plants shall be carefully unloaded at the staging area and stored in a shaded area. Plants shall be stored in original boxes or watered at least daily and maintained in a healthy condition until the time of installation. Damaged, wilted, diseased or dead nursery stock shall not be accepted and shall be immediately replaced at Contractor's expense.

Handle plants carefully during the Work to avoid damaging the plant or root structure. Do not drop or dump plants from a vehicle. Move plants only by supporting the container or rootmass; do not handle plants by the trunk or stem. When removing plants from their container, Contractor shall prevent damage to the plant or root system.

Plants shall be planted as soon as possible after stream channel earthwork is complete and prior to seeding operations, as discussed under Bid Item 4: Revegetation Seeding and

Mulching. Install herbaceous plants at an average spacing of 2 feet across the planting area and woody plants at an average of 8 feet across the planting area; however, rows and regular patterns shall be avoided. Install plants in clusters of approximately 5 to 7 individuals of the same species. Plant trees and shrubs in accordance with the Drawings, Sheet CR3. No fertilizers, pesticides, or herbicides of any kind or amount will be applied on site.

Plants shall be installed by placing them in soil that just covers the potting medium up to the plant's root collar. No portion of the potting medium shall be visible after planning and watering.

Within one hour after planting, each plant shall be thoroughly watered with a minimum of 1 gallon of water per plant. Water for soaking the plants shall be the responsibility of the Contractor in accordance with Bid Item 6: Provide Water.

Contractor shall coordinate this Bid Item with Bid Item 1: Design Channel.

Acceptance

Acceptance of Planting will be by visual inspection at time of installation and by survey of plant survival one year after plants are installed by Engineer. Inspection will be conducted in spring following planting and survival must exceed 80%. If survival falls below 80%, Contractor must replant the total number of plants that did not survive.

Measurement

Measurement for Bid Item 3: Revegetation Planting will be by the actual number of plants installed, as measured by the Engineer.

Payment

Payment for Bid Item 3: Revegetation Planting will be based on the unit price bid for each plant installed as shown on the Bid Form.

2.4 Bid Item 4: Revegetation Seeding and Mulching

Description

Work required includes seeding and mulching operations of all areas indicated on the design drawings, Sheet CR3 and on all disturbed areas including temporary access routes. Both native seed and nursery crop will be broadcast by Contractor after container plants are in-place. Because container plants are present, drill seeding and hydro-seeding applications are not viable options. Hand broadcasting is preferable due to the variety of seed type and weights to be applied, the irregular ground surface developed as described above, and the sporadic placement of container plants.

Materials

Seed of the latest season's crop shall be provided in original sealed packages bearing the producer's guaranteed analysis for percentages of mixture, purity, germination, hard seed, weed seed content, and inert material. All seed shall be certified weed-free and labels shall be in conformance with AMS Seed Act and applicable State seed laws. Native seed mixes are shown in Table 3, including appropriate proportions by weight. Variations to these mixtures may be used with prior approval by Engineer. As many species as possible shall be incorporated.

Mulch shall be Rhino Seed EZ-Straw Seeding Mulch With Tack, or equivalent.

Table 3. Seed Mixture

Scientific Name	Common Name	Minimum % of Mix	Maximum % of Mix
Agrostis exarata	Spike Bentgrass	0	20
Beckmannia syzigachne	American Sloughgrass	0	5
Bromus carinatus	California Brome	0	10
Bromus marginatus	Mountain Brome	0	10
Calamagrostis canadensis	Bluejoint Reedgrass	0	15
Danthania californica	California Oatgrass	0	20
Deschampsia cespitosa	Tufted Hairgrass	0	10
Deschampsia elongata	Slender Hairgrass	0	15
Elymus glaucus	Blue Wildrye	0	15
Hordeum brachyantherum	Meadow Barley	0	15
Triticum aestivum x Secale	QuickGuard	10	15

Execution

Contractor shall coordinate this Bid Item with Bid Item 1: Design Channel. Contractor shall apply seed and mulch within one work day following completion of planting.

If the ground surface is dry at the time of seeding, lightly rake the ground to create a roughened surface prior to seeding, then lightly rake distributed seed into the ground surface. If the ground surface is moist, raking is not necessary. Do not seed if moderate to heavy rain is predicated within a week, as the seed could be washed out during precipitation events.

Seed shall be spread by hand at a rate of 90 pounds per acre.

Mulch shall be spread by hand at a rate of 60 2.5 cubic foot bales per acre.

After seeding and mulching, the seeded area shall be watered thoroughly and thereafter as needed to maintain moisture at the ground surface throughout the planting area until first frost in accordance with Bid Item 6: Provide Water.

Measurement

Measurement for Bid Item 4: Revegetation Seeding and Mulching will be by the actual number of square feet seeded and mulched, measured to the nearest ¼ acre, as measured by the Engineer.

Payment

Payment for Bid Item 4: Revegetation Seeding and Mulching will be based on the unit price bid per square foot seeded as shown on the Bid Form.

2.5 Bid Item 5: Water Management

General

This Bid Item describes the Work required to provide and install channel dewatering systems, provide water control, and provide work area isolation and dewatering for construction. Water management is needed to dewater portions of the existing Hog Creek channel to build the Lilly St. Crossing Structure.

Contractor shall submit to Engineer its Water Management Plan in accordance with the Submittals section of these Special Provisions. Water management shall be executed in accordance with the Water Management Plan and as described below. Flows in Hog Creek may vary during the constructed period and are not guaranteed.

Materials

- Contractor shall provide all labor, equipment, tools, materials, and incidentals necessary to complete the Work as specified.
- Contractor shall provide a coffer dam, water control device(s), and pumps as needed for water reduction and water adjustment during construction.
- Contractor shall provide water control devices (e.g. sandbags, ecology blocks, bulk bags, etc.) that allow for water isolation around project features at the Site.
- Contractor shall provide pump(s) capable of completing the Work described herein.

Execution

Work includes, at a minimum:

- Contractor shall prepare a Water Management Plan and submit to Engineer.
- Contractor shall implement a water control device(s) as needed to reduce flow in the existing channel where project features are to be constructed.
- Contractor shall use a pump or other Engineer-approved water reduction measure to draw down water from the isolation areas at a rate and to a level that is accepted by the Engineer.
- Pumped water containing sediments shall be dispersed onto nearby floodplain areas with a permeable surface, not containing flowing water, as approved by the Engineer. If such a location is not available, pumped water shall be filtered such that turbidity is not increased above background levels before discharging into flowing water.
- Pumped water shall not be pumped directly back into the existing stream channel.

Measurement

No direct measurement for Bid Item 5: Water Management will be made.

Payment

Payment for Bid Item 5: Water Management will be based on the lump sum price bid as shown on the Bid Form of the Contract Documents. This price shall constitute full compensation for all labor, equipment, tools, supplies, materials, and incidentals necessary to accomplish the Work.

2.6 Bid Item 6: Provide Water

Description

This Bid Item covers all Work necessary to obtain and apply water for rewatering the design channel and to water all seeded, mulched, and planted areas. Following construction of new channels and placement of channel substrate in accordance with Bid Item 1: Design Channel, water shall be required to “wash in” fines in the new channel. The purpose is to allow fines to soak into interstitial spaces in substrate to seal the streambed and to prevent excess turbidity when water is reintroduced naturally during the first runoff event following construction.

Materials

- Contractor shall provide and have available as needed during construction at least one truck capable of spreading water uniformly across the surface to be watered and available to all active revegetation areas and constructed channels.
- Water truck shall have capacity and water supply sufficient to complete the Work specified herein.

- Contractor shall obtain water from a public or private source as needed for the Work. If pumping from a surface water body, Contractor shall obtain all necessary water rights and permits and provide a pump with a screened inlet.
- Contractor shall ensure that all water supplies and watering equipment are prepared and readied for use prior to beginning channel rewatering and revegetation and these items shall remain available continuously throughout the remainder of the project for vegetation watering in accordance with Bid Items 3 and 4.

Execution

Work includes:

- Contractor shall apply water at the locations and in the amounts needed to properly complete the Work. Over-watering or under-watering, as determined by Restoration Engineer, shall not be permitted.
- Contractor shall propose a water source location(s) prior to start of construction. Contractor must obtain necessary permits for water withdrawals from waterbodies.
- This task shall continue for either the duration of the contract or until the first hard frost, whichever occurs first.

For watering revegetated areas:

- Following placement of planting, clump planting, or seeding, Contractor shall water in accordance with individual bid items and thoroughly soak all replanted areas three times per week for the duration of this task. Contractor shall not use high pressure, as this could cause rills and washing of topsoil.
- Following watering, the ground surface shall be thoroughly wetted to a depth of at least 3 inches, but no significant standing water shall be present.
- Watering shall not be required on the day following any significant rainfall event.

For rewatering new channel segments:

- Following construction of new channels and placement of channel substrate, contractor shall apply water slowly to the channel bed at the top of the channel segment allowing it to soak in rather than flow out of the channel.
- If needed at the downstream end of the constructed channel or channel segment, Contractor shall construct a small temporary check dam to prevent water from flowing out of constructed channel and hold water in the channel segment while it soaks in.
- Contractor shall repeat this process if needed until all channel substrate has been thoroughly wetted.

Measurement

Measurement for Bid Item 6: Provide Water will be by the actual number of watering days, as measured by Restoration Engineer.

Payment

Payment for Bid Item 6: Provide Water will be made at the price per day as shown on the Bid Form.

2.7 Bid item 7: Lilly St. Crossing Structure

General

This Bid Item includes all Work necessary to install a Crossing Structure in the location shown on the Drawings (Sheet CR1). Refer to the City of Moscow Standard Construction Specifications, Section ES-19, for Trench Excavation and Backfill.

Materials

- Contractor shall provide the necessary materials to complete the Work as described below and as shown on the Drawings.
- 65 LF Crossing Structure that meets the following criteria:
  - Shall have a minimum cross sectional area of 42 square feet.
  - Shall meet minimum and maximum elevations as shown on the Drawings (Sheet CR1).

Execution

Work includes, at a minimum:

- Contractor shall design a Crossing Structure cross section and submit to the Engineer.
- Contractor shall excavate the crossing structure trench as specified under the City of Moscow Standard Construction Specifications, Section ES-19.
- Contractor shall install the Engineer-approved 65 linear foot Crossing Structure to the elevations and in the location shown on the Drawings (Sheet CR1).
- Contractor shall coordinate this work with Bid Item 1: Design Channel and Bid Item 2: Concrete Block Retaining Wall.

Measurement

Measurement for Bid Item 7: Lilly St. Crossing Structure will be by the actual number of linear feet (to the nearest linear foot) of Crossing Structure installed, as measured by Engineer.

Payment

Payment for Bid Item 7: Lilly St. Crossing Structure will be based on the unit price bid per linear foot as shown on the Bid Form of the Contract Documents. This price shall constitute full compensation for all labor, equipment, tools, supplies, materials, and incidentals necessary to accomplish the Work.

APPENDIX 2:

Geoprofessional Innovation (GPI) Geotechnical Report

GeoProfessional Innovation®

August 21, 2020
File: MO20120A

Mr. Matt Gillis, P.E.
Welch Comer Engineers
350 East Kathleen Avenue
Coeur d' Alene, ID 83815

RE: **Geotechnical Exploration Summary**
Lilly Street Improvements
N. Lilly Street & First Street
Moscow, Idaho

Good Day, Matt.

GeoProfessional Innovation Corporation (GPI) is grateful to assist Welch Comer Engineers (Welch Comer) with the upcoming improvements to Lilly Street in Moscow, Idaho. Specifically, we are pleased to aid your design team as they develop plans for a new culvert crossing Lilly Street and open channel along the Hog Creek alignment. We performed our services referencing the proposed scope of services dated June 22, 2020. This document summarizes our field exploration, laboratory test results, and outlines the anticipated subsurface soil conditions within exploration locations.

INTRODUCTION

Welch Comer has been retained by the City of Moscow (City) to design improvements along Lilly Street between A Street and 3rd Street in Moscow, Idaho. Part of these improvements is a new culvert where Lilly Street crosses Hog Creek. The current crossing is a concrete box culvert. The City desires to replace the existing culvert with a new concrete box culvert or an open bottom arch structure. Foundations for the new structure are expected to bear at or near the existing culvert invert, approximately 4 to 6 feet below the existing roadway surface elevation. Also, the project will excavate to change an approximate 500-foot segment of Hog Creek from being channelized subsurface in a box culvert, back to being an open channel. These improvements will be specified as a contractor-supplied design item in the project documents.

SCOPE OF SERVICES

WE performed the following services to help facilitate the geologic understanding and soil conditions of the proposed Lilly Street Improvements.

1. Coordinated with the Idaho Dig Line and Welch Comer before performing exploration. GPI also subcontracted a private utility locator to identify utilities within exploration locations
2. Explored the site subsurface conditions via soil borings and visually classified and logged the soil encountered in reference to the *Unified Soil Classification System* (USCS). We collected soil samples from explorations and performed standard penetration testing (SPT). Exploration logs are presented in Appendix A – *USCS and Exploration Logs*
3. Accomplished laboratory testing referencing *ASTM International* (ASTM) procedures.
4. Prepared this summary letter outlining exploration locations and subsurface data along with laboratory test results.

GPI remains available to consult with the design team and aid in construction continuity services as necessary to facilitate the Welch Comer's and the City's project objectives.

FIELD EXPLORATION

GPI accomplished exploration on August 3 and 4, 2020 by observing 5 exploratory borings extending between 11.5- and 21.5-feet-deep at various locations throughout the proposed improvement area. Approximate boring locations are shown on Plate 1, E*xploration Map.* Soil borings were accomplished with a Mobile B-40 drill rig equipped with solid stem augers and standard penetration test (SPT) sampling equipment. During exploration, our geotechnical engineer visually classified, described, and logged the soil encountered according to the USCS. The USCS should be used to interpret the soil conditions in this document and on the individual exploration logs. Exploratory logs and a USCS summary are provided in Appendix A.

We collected select in-place soil samples from various depths and locations for subsequent laboratory testing. Upon completion, borings were backfilled with bentonite and patched with cold asphalt at the surface where drilling penetrated existing asphalt.

SUBSURFACE CONDITIONS

We encountered 1.8 to 3.0 inches of asphalt underlain by 0.25 to 0.5 feet of base course in borings B-20120A-1 and -2, at the Hog Creek crossing. Base course was described as silty gravel that was dark brown, medium dense, and moist. We encountered gravel surfacing in borings B-20120A-3, -4, and -5 comprising silty gravel that was dark brown, loose to medium dense, and moist. Beneath base course sections and gravel surfacing, we encountered the following subsurface units:

Alluvium:

- Silt (ML): Dark brown, soft to very stiff, and moist. Alluvial silt was encountered in each boring beneath the base course layer or gravel fill extending to depths ranging from 2.0 to 8.0 feet below the ground surface.
- Clay (CL): Light brown to blueish gray, stiff to very stiff, and moist to saturated. Alluvial clay was encountered in each boring beneath alluvial silt extending to depths between 10.5 and 16.5 feet below the ground surface. Borings B-20120A-2, -4 and -5 were terminated in this soil layer.
- Clayey Sand (SC): Blueish gray, medium dense, and saturated. Alluvial clayey sand was encountered in boring B-20120A-1 beneath the alluvial clay as a relatively thin lens approximately 2-feet-thick.
- Poorly Graded Sand (SP): Brown, medium dense to dense, and saturated. Alluvial poorly graded sand was encountered beneath alluvial clayey sand in B-20120A-1 extending to 18.0 feet below the ground surface and beneath alluvial clay in B-20120A-3 to termination depth.
- Clay (CL): Whitish gray with orange staining, very stiff, and saturated. This alluvial clay unit was encountered in B-20120A-1 beneath the poorly graded sand unit extending to 1.5 feet below the ground surface. This soil is locally known as "Bovill Sediments".

Groundwater was encountered in each boring location at depths between 10.5 to 13.0 feet below the ground surface. Groundwater levels are anticipated to fluctuate with the Hog Creek water elevation and seasonal changes in precipitation, runoff, and infiltration. Bedrock was not encountered within the exploration locations or depths at the time of fieldwork.

LABORATORY TESTING

GPI accomplished laboratory testing on select samples retrieved during exploration referencing ASTM standards. Laboratory test results are presented in Appendix B – *Laboratory Test Results*. The following tests were conducted as applicable:

- Natural moisture content
- Atterberg limits
- Grain size distribution
- Proctor density relationships
- Consolidation potential
- In-situ density

Laboratory test results should be used carefully by project designers to estimate soil engineering parameters. GPI cannot be responsible for other use or interpretation of laboratory test data.

ADDITIONAL RECOMMENDED SERVICES

GPI remains available to interact with the project team to assist and advise Welch Comer or other project designers throughout project development and ultimately during construction. GPI can also assist in evaluating the exposed subgrades to verify material characteristics used by design. Having GPI staff review earthwork and foundation construction for conformance with our findings can help to identify potential geotechnical problems, thus allowing the contractor to proactively remedy them and reduce the potential for errors.

EVALUATION LIMITATIONS

The exploration and laboratory testing services described herein were performed to provide Welch Comer and the design team with geotechnical site characteristics to ultimately be used for design and construction purposes. This letter and the services we provided to date do not comprise a geotechnical engineering evaluation for the proposed improvements or subgrade performance as it pertains to <u>any</u> future development or construction. Rather, we provide our findings and lab results based on exploration advanced to date and typical ASTM testing procedures. Project design and construction professionals must apply appropriate judgment to the exploration findings presented herein to facilitate prudent design concept development. This acknowledgment is in lieu of any express or implied warranties. Please contact us if you have any questions or comments so that we may address them in a proactive and timely fashion.

Sincerely,
GPI

Justin B. Maffey, E.I.
Project Engineer

Andrew J. Abrams, P.E.
Senior Engineer

AJA/ac

Attachments: Plate 1: Exploration Map
Appendix A: Unified Soil Classification System (USCS) and Exploration Logs
Appendix B: Laboratory Test Results

LEGEND

B-20120A-1 — Approximate boring location observed by GPI on August 3 and 4, 2020.

(3.4) — Approximate depth to groundwater observed (feet).

EXPLORATION MAP
Lilly Street Improvements
North Lilly Street & First Street
Moscow, Idaho

GeoProfessional Innovation.

MO20120A	PLATE 1

Reference: Base image from © 2020 Google Earth. No Scale Intended.

APPENDIX A

Unified Soil Classification System (USCS) Exploration Logs

UNIFIED SOIL CLASSIFICATION SYSTEM

MAJOR DIVISIONS			GRAPHIC SYMBOL	GROUP SYMBOL	TYPICAL NAMES
COARSE GRAINED SOIL	GRAVEL	CLEAN GRAVEL		GW	WELL-GRADED GRAVEL, GRAVEL-SAND MIXTURES.
				GP	POORLY-GRADED GRAVEL, GRAVEL-SAND MIXTURES.
		GRAVEL WITH FINES		GM	SILTY GRAVEL, GRAVEL-SAND-SILT MIXTURES.
				GC	CLAYEY GRAVEL, GRAVEL-SAND-CLAY MIXTURES.
	SAND	CLEAN SAND		SW	WELL-GRADED SAND, GRAVELLY SAND.
				SP	POORLY-GRADED SAND, GRAVELLY SAND.
		SAND WITH FINES		SM	SILTY SAND, SAND-SILT MIXTURES.
				SC	CLAYEY SAND, SAND-CLAY MIXTURES.
FINE GRAINED SOIL	SILT AND CLAY LIQUID LIMIT LESS THAN 50%			ML	INORGANIC SILT, SANDY OR CLAYEY SILT.
				CL	INORGANIC CLAY OF LOW TO MEDIUM PLASTICITY, SANDY OR SILTY CLAY.
				CL-ML	INORGANIC MIXED CLAY AND SILT.
				OL	ORGANIC SILT AND CLAY OF LOW PLASTICITY.
	SILT AND CLAY LIQUID LIMIT GREATER THAN 50%			MH	INORGANIC SILT, MICA- CEOUS SILT, PLASTIC SILT.
				CH	INORGANIC CLAY OF HIGH PLASTICITY, FAT CLAY.
				OH	ORGANIC CLAY OF MEDIUM TO HIGH PLASTICITY.
				PT	PEAT, MUCK AND OTHER HIGHLY ORGANIC SOILS.

BORING LOG SYMBOLS

STANDARD 2 INCH OD SPLIT SPOON SAMPLE

CALIFORNIA MODIFIED 3 INCH OD SPLIT SPOON SAMPLE

ROCK CORE

SHELBY TUBE 3 INCH OD UNDISTURBED SAMPLE

TEST PIT LOG SYMBOLS

GRAB BAG SAMPLE

BG

BULK SAMPLE

BK

RING SAMPLE

RG

GROUNDWATER SYMBOLS

GROUNDWATER AFTER 24 HOURS

GROUNDWATER AT TIME OF EXPLORATION

GROUNDWATER AT THE END OF EXPLORATION

GeoProfessional Innovation®

USCS Description	Depth (ft)	Symbol	Sample Type	SPT Blows Per 6 Inches	SPT N	Dry Density (pcf)	TEST RESULTS: Pocket Penetrometer, TSF ▲ (0.5 1.0 1.5 2.0 2.5 3.0 3.5 4.0 4.5); SPT, N-Value ●; % Passing No. 200 Sieve ★ (PL MC LL; 20 40 60 80)	Remarks Note: BGS = Below Ground Surface
ASPHALT CONCRETE, (AC) (3.0")	0	AC						
BASE COURSE - SILTY GRAVEL, (GM) dark brown, medium dense, moist, (3.0")		GM						
ALLUVIUM - SILT, (ML) dark brown, stiff, moist		ML						
	5			3 5 8	13			
ALLUVIUM - CLAY, (CL) blueish gray, stiff, moist to wet		CL						
	10			6 7 10	17			
ALLUVIUM - CLAYEY SAND, (SC) blueish gray, medium dense, saturated		SC						
ALLUVIUM - POORLY-GRADED SAND, (SP) brown, medium dense, saturated								
	15	SP		7 18 8	26			
ALLUVIUM - CLAY, (CL) whiteish gray with orange staining, very stiff, saturated		CL						
	20			1 12 5	17			

Borehole Terminated at 21.5 Feet.

Boring backfilled, plugged with bentonite, and patched with cold asphalt.

Client: Welch Comer Engineers	**Boring Number:** B-20120A-1	GeoProfessional Innovation.	**EXPLORATORY BORING LOG**
Project: Lilly Street Improvements	**Date Drilled:** 08-03-2020		
Drill Rig: MOBILE B-40	**Borehole Diameter:** 4"		
Depth to Groundwater: 11'	**Logged By:** JTK		Sheet 1 Of 1

USCS Description	Depth (ft)	Symbol	Sample Type	SPT Blows Per 6 Inches	SPT N	Dry Density (pcf)	TEST RESULTS Pocket Penetrometer, TSF ▲ (0.5 1.0 1.5 2.0 2.5 3.0 3.5 4.0 4.5) SPT, N-Value ● % Passing No. 200 Sieve ★ (PL MC LL; 20 40 60 80)	Remarks Note: BGS = Below Ground Surface
ASPHALT CONCRETE, (AC) (1.75") BASE COURSE - SILTY GRAVEL, (GM) dark brown, medium dense, moist, (6.0") ALLUVIUM - SILT, (ML) dark brown, very stiff, moist	0	AC GM						
		ML						
	5			5 11 13	24			
ALLUVIUM - CLAY, (CL) light brown to blueish gray, stiff to very stiff, wet to saturated								
	10			5 8 13	21			
		CL						Intermittent sand lens observed at approximately 13.0 feet BGS.
	15			2 4 9	13			

Borehole Terminated at 16.5 Feet.

Boring backfilled, plugged with bentonite, and patched with cold asphalt.

Client: Welch Comer Engineers	**Boring Number:** B-20120A-2	GeoProfessional Innovation.	**EXPLORATORY BORING LOG**
Project: Lilly Street Improvements	**Date Drilled:** 08-03-2020		
Drill Rig: MOBILE B-40	**Borehole Diameter:** 4"		
Depth to Groundwater: 13'	**Logged By:** JTK		Sheet 1 Of 1

USCS Description	Depth (ft)	Symbol	Sample Type	SPT Blows Per 6 Inches	SPT N	Dry Density (pcf)	TEST RESULTS: Pocket Penetrometer, TSF ▲ (0.5 1.0 1.5 2.0 2.5 3.0 3.5 4.0 4.5); SPT, N-Value ●; % Passing No. 200 Sieve ★ (PL MC LL; 20 40 60 80)	Remarks Note: BGS = Below Ground Surface
FILL - SILTY GRAVEL, (GM) dark brown, loose to medium dense, moist	0	GM						Metal and rubber debris encountered to approximately 1.0 foot BGS.
ALLUVIUM - SILT, (ML) dark brown, soft, moist		ML	BK					
ALLUVIUM - CLAY, (CL) light brown, very stiff, moist to wet	5	CL		3 6 10	16			
ALLUVIUM - POORLY-GRADED SAND, (SP) brown, dense, saturated	10	SP		7 11 21	32			

Borehole Terminated at 11.5 Feet.

Boring backfilled and plugged with bentonite.

Client: Welch Comer Engineers	**Boring Number:** B-20120A-3	GeoProfessional Innovation.	**EXPLORATORY BORING LOG**
Project: Lilly Street Improvements	**Date Drilled:** 08-04-2020		
Drill Rig: MOBILE B-40	**Borehole Diameter:** 4"		
Depth to Groundwater: 10.5'	**Logged By:** JTK		Sheet 1 Of 1

USCS Description	Depth (ft)	Symbol	Sample Type	SPT Blows Per 6 Inches	SPT N	Dry Density (pcf)	TEST RESULTS Pocket Penetrometer, TSF ▲ (0.5 1.0 1.5 2.0 2.5 3.0 3.5 4.0 4.5) SPT, N-Value ● % Passing No. 200 Sieve ★ (PL MC LL; 20 40 60 80)	Remarks Note: BGS = Below Ground Surface
FILL - SILTY GRAVEL, (GM) dark brown, loose to medium dense, moist	0	GM						
ALLUVIUM - SILT, (ML) dark brown, soft, moist		ML						
ALLUVIUM - CLAY, (CL) light brown, stiff to very stiff, moist to wet		CL						
	5			3 3 7	10			
	10			5 8 11	19			
Borehole Terminated at 11.5 Feet.								Boring backfilled and plugged with bentonite.

Client: Welch Comer Engineers	**Boring Number:** B-20120A-4	GeoProfessional Innovation.	**EXPLORATORY BORING LOG**
Project: Lilly Street Improvements	**Date Drilled:** 08-04-2020		
Drill Rig: MOBILE B-40	**Borehole Diameter:** 4"		
Depth to Groundwater: 11.5'	**Logged By:** JTK		Sheet 1 Of 1

USCS Description	Depth (ft)	Symbol	Sample Type	SPT Blows Per 6 Inches	SPT N	Dry Density (pcf)	TEST RESULTS Pocket Penetrometer, TSF ▲ (0.5 1.0 1.5 2.0 2.5 3.0 3.5 4.0 4.5) SPT, N-Value ● % Passing No. 200 Sieve ★ (PL MC LL; 20 40 60 80)	Remarks Note: BGS = Below Ground Surface
FILL - SILTY GRAVEL, (GM) dark brown, loose to medium dense, moist	0	GM						
ALLUVIUM - SILT, (ML) dark brown, soft, moist		ML						
ALLUVIUM - CLAY, (CL) light brown, stiff to very stiff, moist to wet	5	CL		4 5 5	10			
	10			4 7 9	16			

Borehole Terminated at 11.5 Feet.

Boring backfilled and plugged with bentonite.

Client: Welch Comer Engineers	**Boring Number:** B-20120A-5	GeoProfessional Innovation.	**EXPLORATORY BORING LOG**
Project: Lilly Street Improvements	**Date Drilled:** 08-04-2020		
Drill Rig: MOBILE B-40	**Borehole Diameter:** 4"		
Depth to Groundwater: 10.5'	**Logged By:** JTK		Sheet 1 Of 1

APPENDIX B

Laboratory Test Results

GeoProfessional Innovation.

Report Date: 8/20/2020

Project No.: MO20120A
Project Name: Lilly Street Improvements
Client: Welch Comer Engineers

Test Results Summary

Boring	Depth	Lab	Description	In situ	In situ Dry	Max Dry	Optimum	Atterberg Limits		#200 Sieve		Resistivity	Sulfates
B	(feet)	Number	(U.S.C.S. Classification)	Moisture, %	Density, pcf	Density, pcf	Moisture, %	Liquid Limit	Plasticity Index	Passing, %	pH	Ω·cm	ppm
B-20120A-1	5.0-6.5	PUL20-0203A	Silt (ML)	27.1	-	-	-	-	-	-	6.9	2590	-
B-20120A-1	10.0-11.5	PUL20-0203G	Clay (CL)	-	-	-	-	-	-	-	6.9	2630	-
B-20120A-1	15.0-16.5	PUL20-0203B	Poorly-Graded Sand (SP)	14.8	-	-	-	-	-	4.5	-	-	-
B-20120A-2	5.0-6.5	PUL20-0203C	Silt (ML)	19.9	100.3	-	-	32.0	12.0	92.8	-	-	-
B-20120A-2	10.0-11.5	PUL20-0203D	Clay (CL)	23.2	-	-	-	-	-	-	-	-	-
B-20120A-3	2.0-4.0	PUL20-0203E	Silt (ML)	-	-	113.5	15.0	-	-	-	-	-	-
B-20120A-4	5.0-6.5	PUL20-0203F	Clay (CL)	23.8	-	-	-	-	-	-	-	-	-

Reviewed by: Andy Abrg

CONSOLIDATION TEST RESULTS
ASTM D 2435 (Method A)

Project: Lilly Street Improvements
Client: Welch Comer Engineers
File Name: MO20120A
Lab Number: PUL20-0203C
Sample Identification: B-20120A-2 @ 5.0 - 6.0 feet BGS
Sample Classification: Silt (ML)
Sample: In-Situ Tube (Condition: Good)
Date Tested: 8/11/2020 By: AMC
Sample Dry Unit Weight: 100.3 pcf
In-Situ Moisture Content: 19.9%
Atterberg Limits: LL=32 PI=12

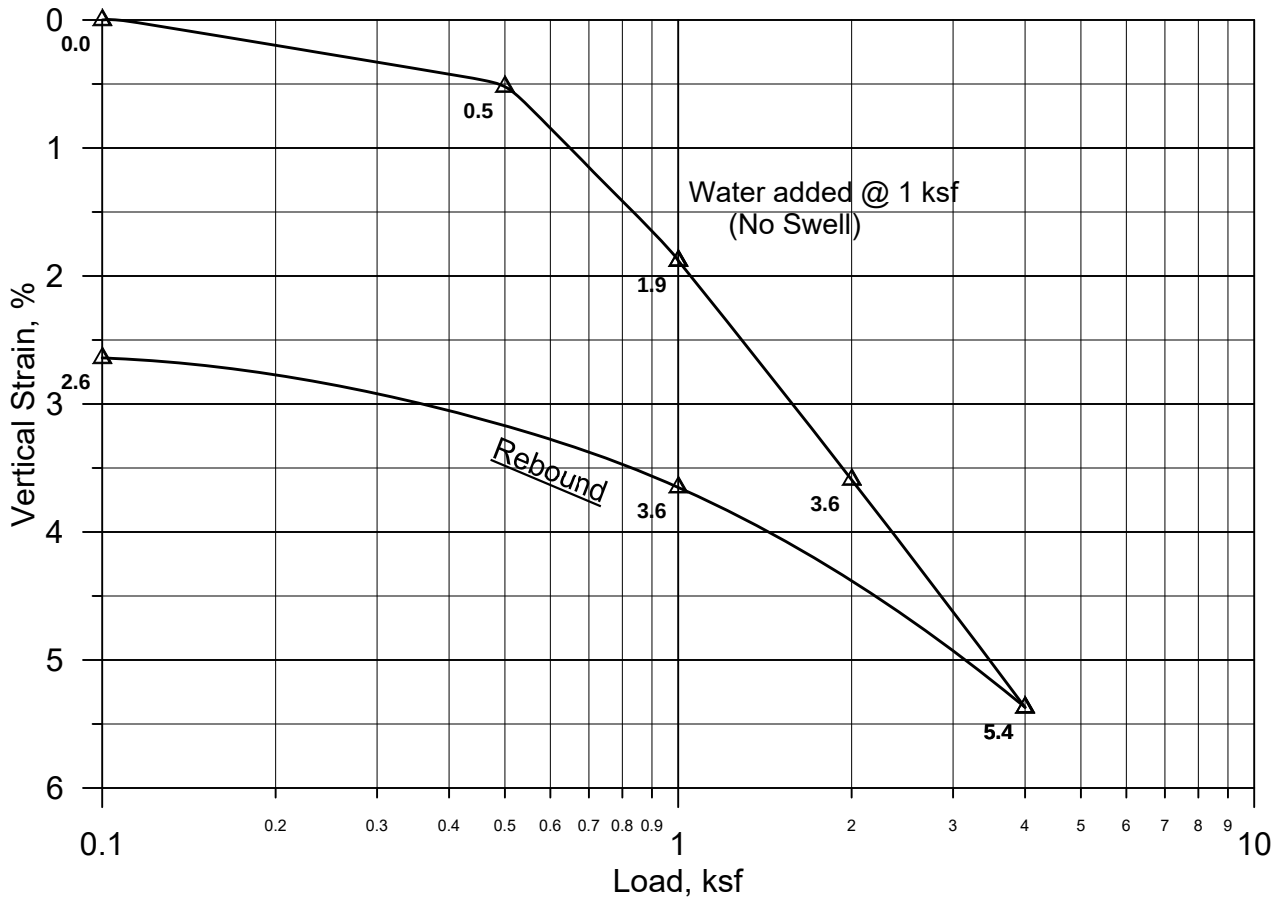

Reviewed By: _____

GeoProfessional Innovation.

MOISTURE-DENSITY RELATIONSHIP CURVE
ASTM D 1557
Method A

GRADING ANALYSIS

SCREEN SIZE	% PASSING	AS TESTED
No. 4	100	100

Project: Lilly Street Improvements
Client: Welch Comer Engineers, Inc.
File Name: MO20120
Lab Number: PUL20-0203E
Sample Location: B-20120A-3 @ 2.0 - 4.0 feet BGS
Sample Classification: Silt (ML)
Date Tested: 8/12/20 By: AJA
Rammer Type: Manual

Maximum Dry Density, pcf : 113.5
Optimum Moisture Content, %: 15.0

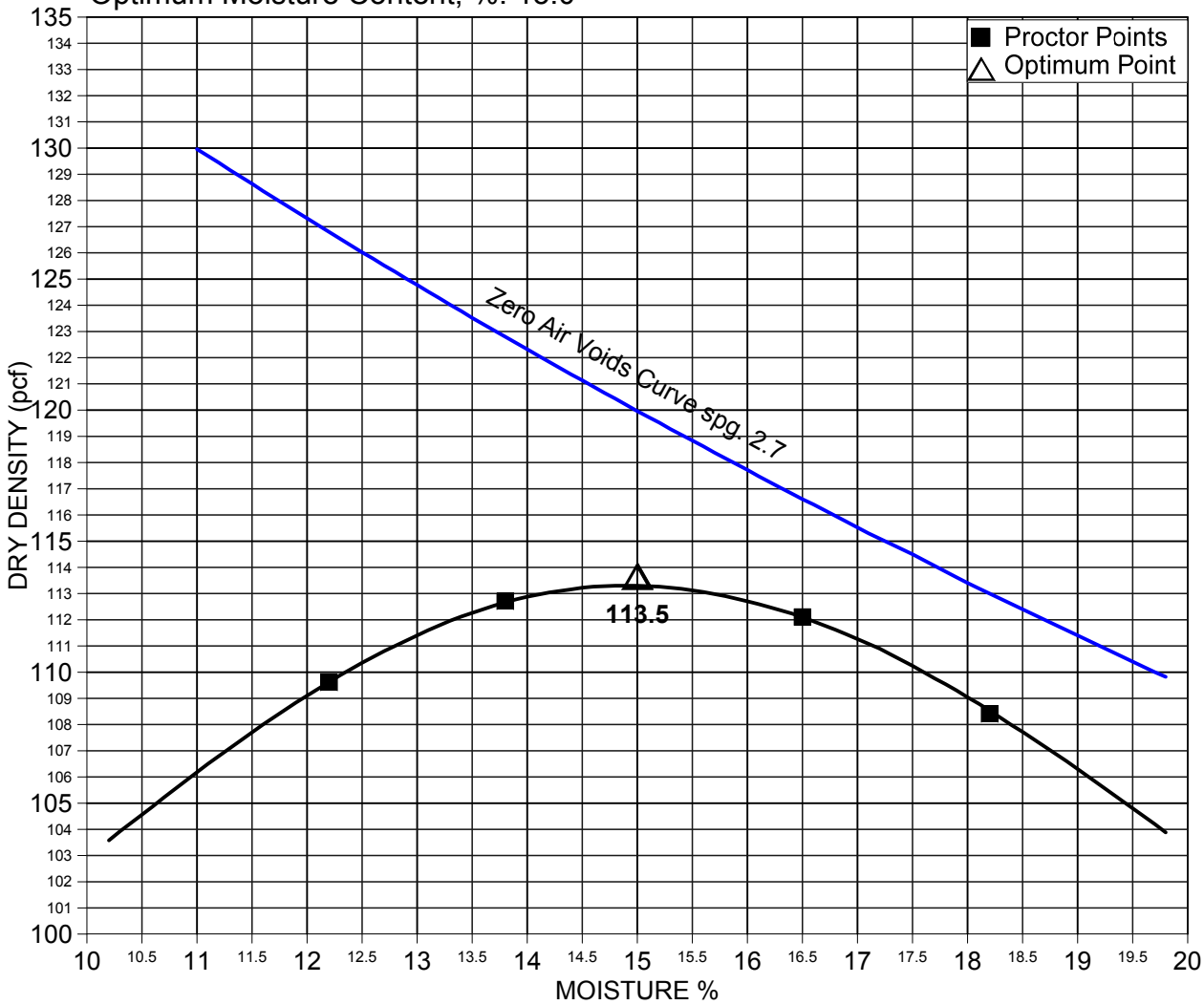

Reviewed By: _____

GeoProfessional Innovation.

APPENDIX 3:

Moscow Standard Construction Drawings

APPROVED BY MOSCOW CITY COUNCIL
APRIL 7, 2014, RESOLUTION 2014-06

CITY OF MOSCOW 1887 IDAHO

STANDARD CONSTRUCTION DRAWINGS

PUBLIC WORKS
ENGINEERING DEPT.
221 E. SECOND ST.
(208) 883-7034

"CALL BEFORE YOU DIG" 811

STANDARD CONSTRUCTION DRAWINGS TABLE OF CONTENTS

1a	LOCAL STREET - (36' Street)	18	SUBSURFACE DRAINAGE
1b	ALTERNATE LOCAL STREET - (28' Street)	19	STREET MONUMENT
1c	COLLECTOR	20	SURVEY MONUMENT
1d	COLLECTOR WITH LEFT TURN LANE	21	STORM SEWER MANHOLE
1e	COLLECTOR PARKING DETAIL	22	SANITARY SEWER MANHOLE
1f	MINOR ARTERIAL	23	SHALLOW SANITARY MANHOLE
1g	MINOR ARTERIAL WITH LEFT TURN LANE	24	STORM & SANITARY MANHOLE RING & COVER
1h	LARGE LOT SUBDIVISION STREET	25	MANHOLE BASE DETAILS
2	ALLEY STANDARD	26	CATCH BASIN & CATCH INLET
3	PRIVATE STREETS	27a	CURB & GUTTER PAN
4	CUL-DE-SAC DETAILS	27b	COMBINATION INLET
5	TEMPORARY TURNAROUND	27c	CATCH BASIN & INLET TYPE 'A' GRATE
6	CURBS & GUTTERS	27d	CATCH BASIN & INLET TYPE 'B' GRATE (Rolled Curb)
7	SIDEWALKS & PATHWAYS	28	SANITARY & STORM SEWER SERVICE CONNECTIONS
8	PEDESTRIAN RAMPS	29	WATER SERVICE CONNECTIONS
9	DRIVEWAY APPROACHES	30	FIRE HYDRANT ASSEMBLY
10	CEMENT CONCRETE PAVEMENT	31	WATER MAIN THRUST BLOCKING
11	PARKING LOT STANDARDS	32	WATER MAIN CREEK CROSSING
12	DRIVEWAY GRADE LIMITATIONS	33a	BACKFILL - CLASS A & B
13	UTILITY & MAILBOX LOCATIONS	33b	BACKFILL - CLASS C & D
14	FRANCHISE UTILITY DETAILS	33c	BACKFILL - CLASS E & F
15	RESIDENTIAL STREET LIGHTING	34	STREET / ALLEY CUT REPAIR
16	END OF ROAD MARKERS & DEAD END SIGNS	35	SILT FENCE
17	INTERSECTION SIGHT TRIANGLE	36	CONSTRUCTION ENTRANCE AND INLET PROTECTION

A.S.T.M.	AMERICAN SOCIETY FOR TESTING & MATERIALS	JT.	JOINT
AASHTO	AMERICAN ASSOCIATION OF STATE HIGHWAY AND TRANSPORTATION OFFICIALS	MECH.	MECHANICAL
A.D.A.	AMERICAN DISABILITIES ACT	M.J.	MECHANICAL JOINT
AGGR.	AGGREGATE	MUTCD	MANUAL ON UNIFORM TRAFFIC CONTROL DEVICES
C.I.	CAST IRON	O/C	ON CENTER
CL.	CLASS	OSHA	OCCUPATIONAL AND SAFETY HAZARD ASSOCIATION
CMP	CORRUGATED METAL PIPE	R	RADIUS
COMP.	COMPACTED or COMPACTION	R/W	RIGHT-OF-WAY
CONC.	CONCRETE	SPEC.	SPECIFICATION
D.I.	DUCTILE IRON	STA.	STATION
DIA.	DIAMETER	SL.	SLOPE
I.D.	INSIDE DIAMETER	THK.	THICK
FLG.	FLANGE	TYP.	TYPICAL
G.V.	GATE VALVE	WSDOT	WASHINGTON STATE DEPARTMENT OF TRANSPORTATION

	AGGREGATE		METAL
	CONCRETE	NOTE:	
	EARTH	② CIRCLED NUMBERS HEREIN THESE STANDARDS INDICATE A NOTE REFERENCE	
	PAVEMENT		

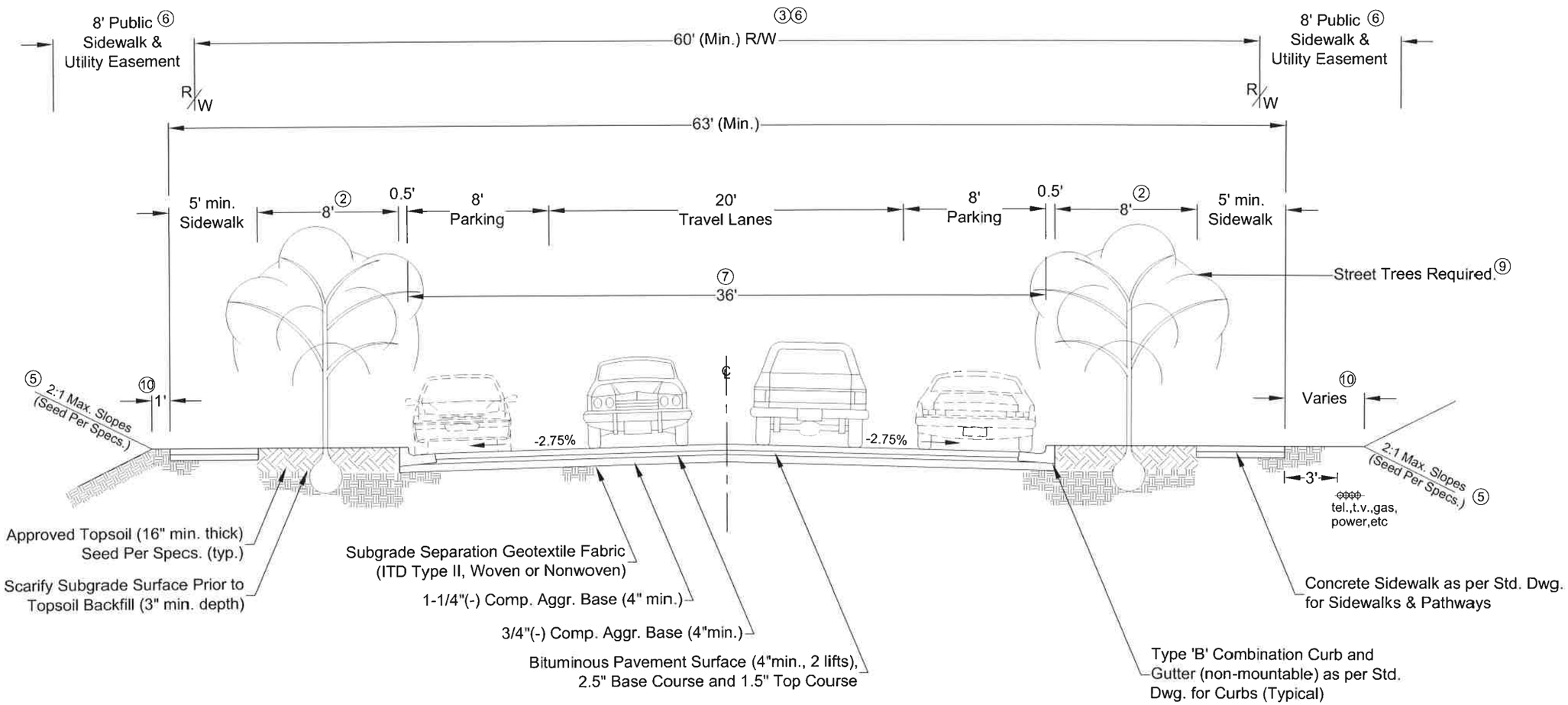

Notes:

1. This street section should be used as the minimum standard for all streets not classified as Collector or Arterial, or under conditions in which the Standard Drawing for Alternate Local Street (28' Street) is allowed.
2. The eight foot (8') wide green strip may be narrowed to a minimum width of five feet (5') in areas of excessive cuts and fills, as approved by City Engineer.
3. Center streets in platted right-of-way, unless approved otherwise by the City Engineer. Additional right-of-way shall be required as necessary to accommodate topography, utilities, or other needs as determined by the City Engineer.
4. Compact all subgrade and base aggregate to 95% of AASHTO T99 max. proctor density.
5. Seed all roadside backfill and excavations as per Standard Specifications.
6. Wider platted rights-of-way allow narrower easements, proportionately. Additional easements may be required as necessary.
7. Maximum street centerline profile grade shall equal 10.0% or as approved by the City Engineer.
8. Subgrade underdrain systems are required in inherently "wet" areas, as specified by the City Engineer, see Standard Drawing for Subsurface Drainage.
9. Tree selection and planting shall comply with the City's Arboricultural Standards and Specification Guide.
10. This dimension shall be four feet (4') where standard franchise utility pedestals (excluding transformers) are to be located and shall be six feet (6') where pedestals and an AVISTA power transformer pad is required (see Standard Drawing for Franchise Utility Details).

REVISIONS	
DATE	DESCRIPTION

PROFESSIONAL ENGINEER REGISTERED 8832 5-19-14 STATE OF IDAHO KEVIN LILLY

DRAFTED BY: C.Edwards
CHECKED BY: K.Lilly
DRAWING SCALE: NTS
DATE: 3-31-2014

Local Street
(36' Street)

CITY OF MOSCOW
ENGINEERING DEPARTMENT

DRAWING NUMBER:
1a

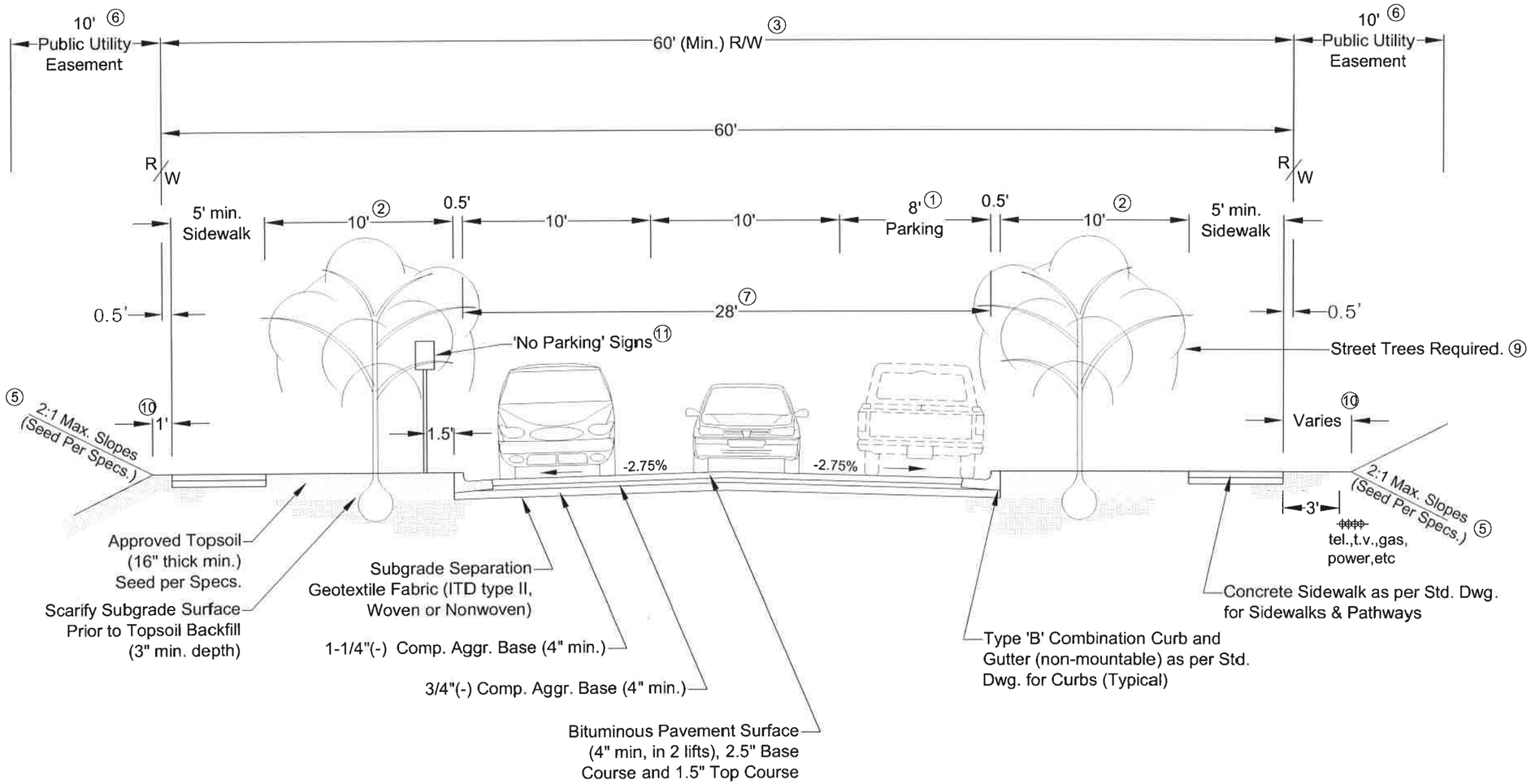

Notes:

1. Use of this street standard shall be limited to cul-de-sacs and one to two block unextendable streets. In addition, this standard shall only be used in Residential Zones unless otherwise approved by the City Engineer. Engineering plans for subdivisions must specify on which side of street parking will be allowed.
2. The 10' wide green strip may be narrowed to a minimum width of five feet (5') in areas of excessive cuts and fills, as approved by City Engineer.
3. Center streets in platted right-of-way, unless approved otherwise by the City Engineer. Additional right-of-way shall be required as necessary to accommodate topography, utilities, or other needs as determined by the City Engineer.
4. Compact all subgrade and base aggregate to 95% of AASHTO T99 max. proctor density.
5. Seed all roadside backfill and excavations as per Standard Specifications.
6. Wider platted rights-of-way allow narrower easements, proportionately. Additional easement may be required as necessary.
7. Maximum street centerline profile grade shall equal 10.0% or as approved by the City Engineer.
8. Subgrade underdrain systems are required in inherently "wet" areas, as specified by the Engineer, see Standard Drawing for Subsurface Drainage.
9. Tree selection and planting shall comply with the City's Arboricultural Standards and Specification Guide.
10. This dimension shall be four feet (4') where standard franchise utility pedestals (excluding transformers) are to be located and shall be six feet (6') where pedestals and an AVISTA power transformer pad is required (see Standard Drawing for Franchise Utility Details).
11. All signs to be furnished and installed by 'Developer.' Signs and installation to be in accordance with MUTCD.

REVISIONS	
DATE	DESCRIPTION

PROFESSIONAL ENGINEER REGISTERED 8832 5-19-14 STATE OF IDAHO KEVIN LILLY

DRAFTED BY: C.Edwards
CHECKED BY: K.Lilly
DRAWING SCALE: NTS
DATE: 3-31-2014

Alternate Local Street (28' Street)

CITY OF MOSCOW
ENGINEERING DEPARTMENT

DRAWING NUMBER: 1b

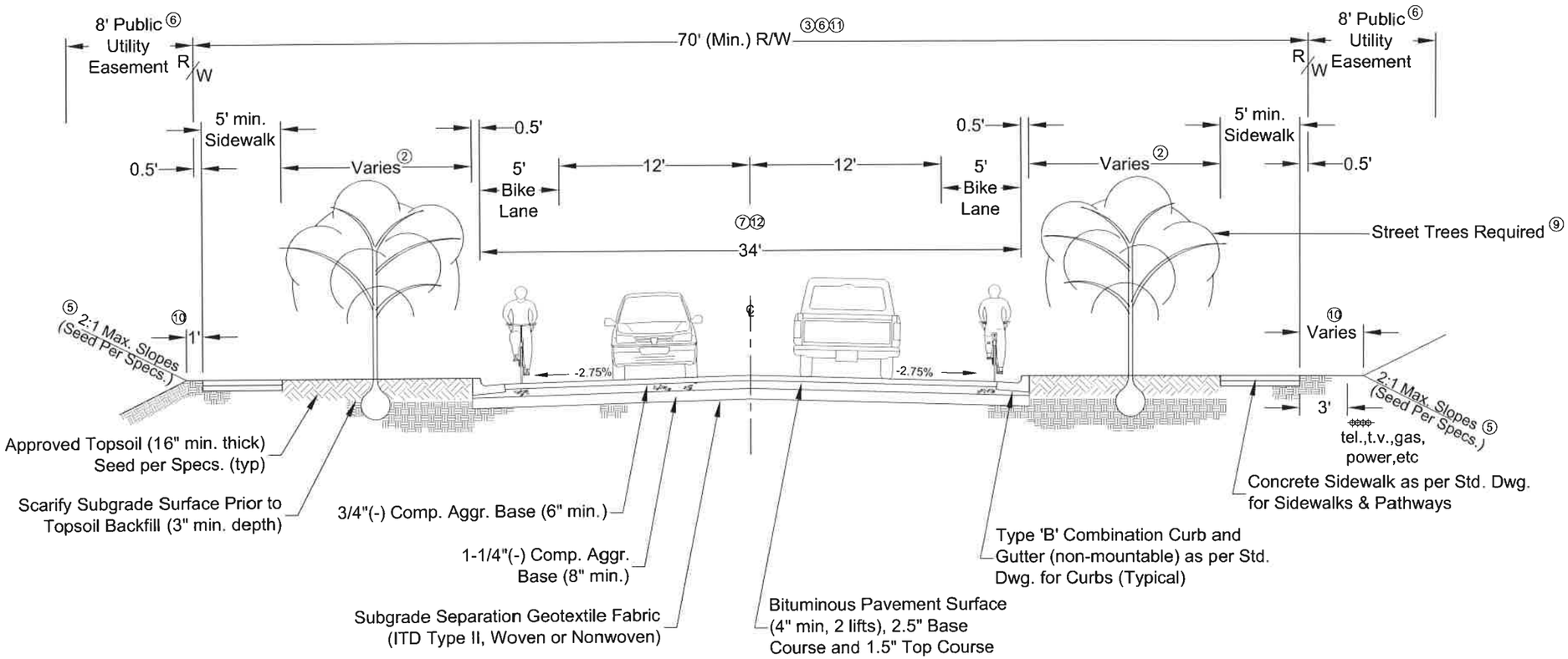

Notes:

1. This street section shall be used as a minimum standard for Collector class streets in all zones or for other high volume Collector streets where on-street parking is not considered essential and future travel lanes are not anticipated.
2. The green strip may be narrowed to a minimum width of five feet (5') in areas of excessive cuts and fills, as approved by City Engineer.
3. Center streets in platted right-of-way, unless approved otherwise by the City Engineer. Additional right-of-way width shall be required as necessary to accommodate topography, utilities, turn lanes, roundabouts, signalized intersections, or other needs as determined by the City Engineer. Additional right-of-way required for transit stops at Minor Arterial and Collector intersections or every thousand feet (1000').
4. Compact all subgrade and base aggregate to 95% of AASHTO T99 max. proctor density.
5. Seed all roadside backfill and excavations as per Standard Specifications.
6. Wider platted rights-of-way allow narrower easements, proportionately. Additional easements may be required as necessary.
7. Maximum street centerline profile grade shall equal 10.0% or as approved by the City Engineer.
8. Subgrade underdrain systems are required in inherently "wet" areas, as specified by the City Engineer, see Standard Drawing for Subsurface Drainage.
9. Tree selection and planting shall comply with the City's Arboricultural Standards and Specification Guide.
10. This dimension shall be four feet (4') where standard franchise utility pedestals (no transformers) are to be located and shall be six feet (6') where pedestals and an AVISTA power transformer pad is required (see Standard Drawing for Franchise Utility Details).
11. On-street parking (9' width for Residential and 10' width for Collector/Industrial) is optional in this road standard. If included on one or both sides, then additional right-of-way shall be required (see Standard Drawing for Collector Parking Detail).
12. A center median is an option in this road standard. Minimum planter width shall be seven feet (7') with curbs on each side. Travel lanes adjacent to median shall be increased two feet (2') in width. Additional ROW shall be required to accommodate the median, curbs, and additional lane widths.
13. Collector streets in Commercial and Industrial zones shall be subject to access control.

REVISIONS	
DATE	DESCRIPTION

PROFESSIONAL ENGINEER REGISTERED 8832 5-19-14 STATE OF IDAHO KEVIN LILLY

DRAFTED BY: C.Edwards
CHECKED BY: K.Lilly
DRAWING SCALE: NTS
DATE: 3-31-2014

Collector

CITY OF MOSCOW
ENGINEERING DEPARTMENT

DRAWING NUMBER: 1c

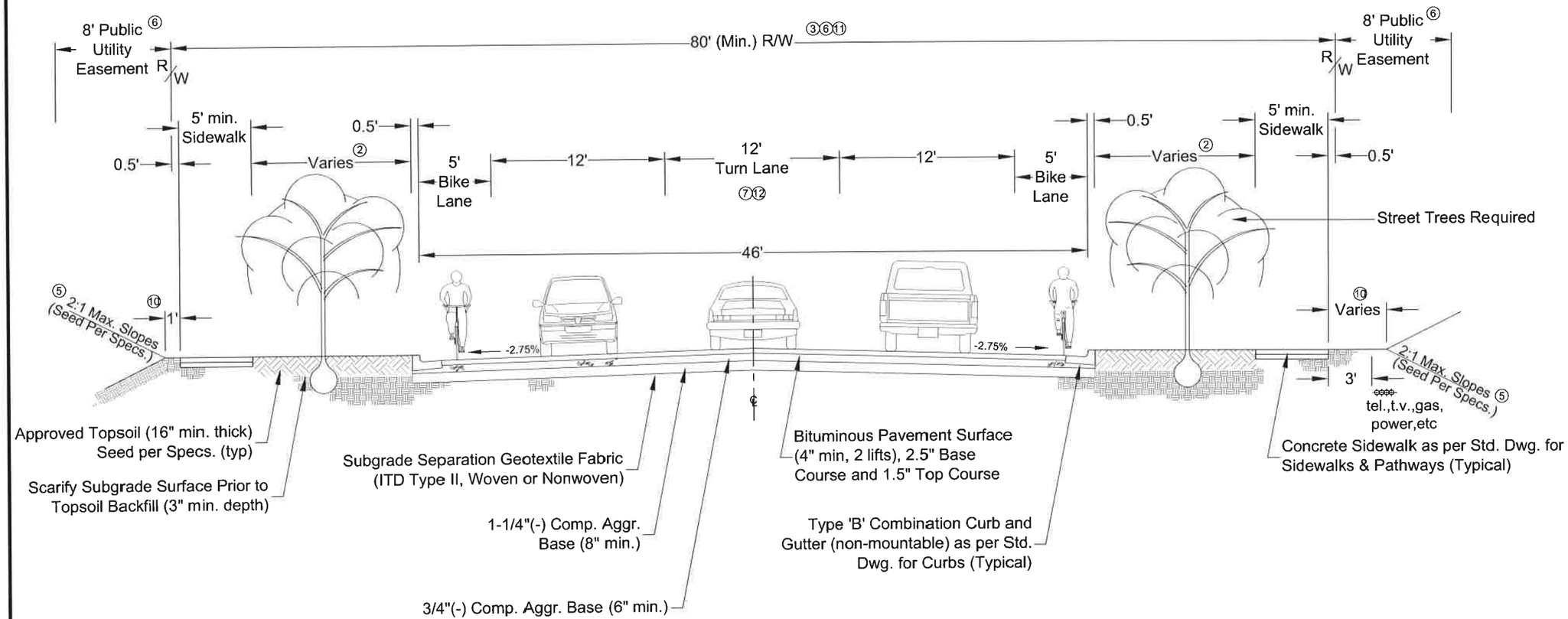

Notes:

1. This street section shall be used as a minimum standard for collector class streets in all zones or for other high volume Collector streets where on-street parking is not considered essential and future travel lanes are not anticipated.
2. The green strip may be narrowed to a minimum width of five feet (5') in areas of excessive cuts and fills, as approved by City Engineer.
3. Center streets in platted right-of-way, unless approved otherwise by the City Engineer. Additional right-of-way width shall be required as necessary to accommodate topography, utilities, turn lanes, roundabouts, signalized intersections, or other needs as determined by the City Engineer. Additional right-of-way required for transit stomps at Minor Arterial and Collector intersections or every thousand feet (1000').
4. Compact all subgrade and base aggregate to 95% of AASHTO T99 max. proctor density.
5. Seed all roadside backfill and excavations as per Standard Specifications.
6. Wider platted rights-of-way allow narrower easements, proportionately. Additional easements may be required as necessary.
7. Maximum street centerline profile grade shall equal 10.0% or as approved by the City Engineer.
8. Subgrade underdrain systems are required in inherently "wet" areas, as specified by the City Engineer, see Standard Drawing for Subsurface Drainage.
9. Tree selection and planting shall comply with the City's Arboricultural Standards and Specification Guide.
10. This dimension shall be four feet (4') where standard franchise utility pedestals (no transformers) are to be located and shall be six feet (6') where pedestals and an AVISTA power transformer pad is required (see Standard Drawing for Franchise Utility Details).
11. On-street parking (9' width for Residential and 10' width for Collector/Industrial) is optional in this road standard. If included on one or both sides, then additional right-of-way shall be required (see Standard Drawing for Collector Parking Detail).
12. A center median is an option in this road standard. Minimum planter width shall be seven feet (7') with curbs on each side. Travel lanes adjacent to median shall be increased two feet (2') in width. Additional right-of-way shall be required to accommodate the median, curbs, and additional lane widths.
13. Collector streets in Commercial and Industrial zones shall be subject to access control.

REVISIONS	
DATE	DESCRIPTION

PROFESSIONAL ENGINEER REGISTERED 8832 5-19-14 STATE OF IDAHO KEVIN LILLY

DRAFTED BY: C.Edwards
CHECKED BY: K.Lilly
DRAWING SCALE: NTS
DATE: 3-31-2014

Collector With Left Turn Lane

CITY OF MOSCOW
ENGINEERING DEPARTMENT

DRAWING NUMBER: 1d

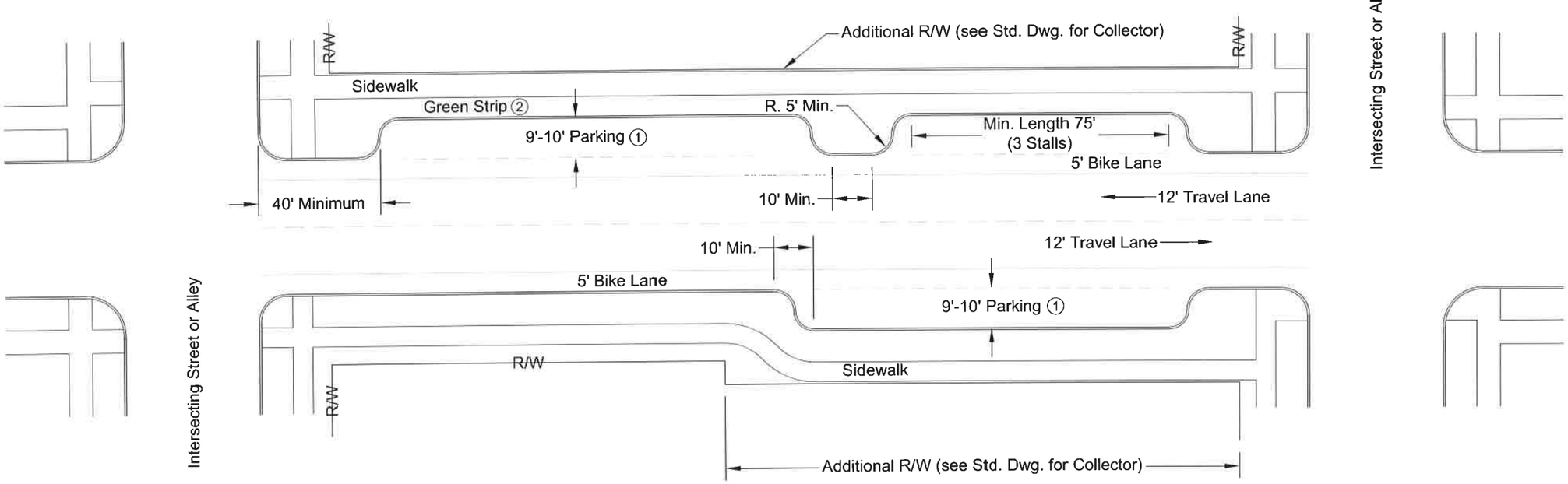

Notes:

1. Parking on Collector streets shall be a minimum of nine feet (9') wide in Residential zones and ten feet (10') wide in Commercial and Industrial zones.

2. The green strip may be narrowed to a minimum width of five feet (5') in areas of excessive cuts and fills, as approve by the City Engineer.

REVISIONS	
DATE	DESCRIPTION

PROFESSIONAL ENGINEER REGISTERED 8832 5-19-14 STATE OF IDAHO KEVIN LILLY

DRAFTED BY: C.Edwards

CHECKED BY: K.Lilly

DRAWING SCALE: NTS

DATE: 2-25-2014

Collector Parking Detail

CITY OF MOSCOW
ENGINEERING DEPARTMENT

DRAWING NUMBER: 1e

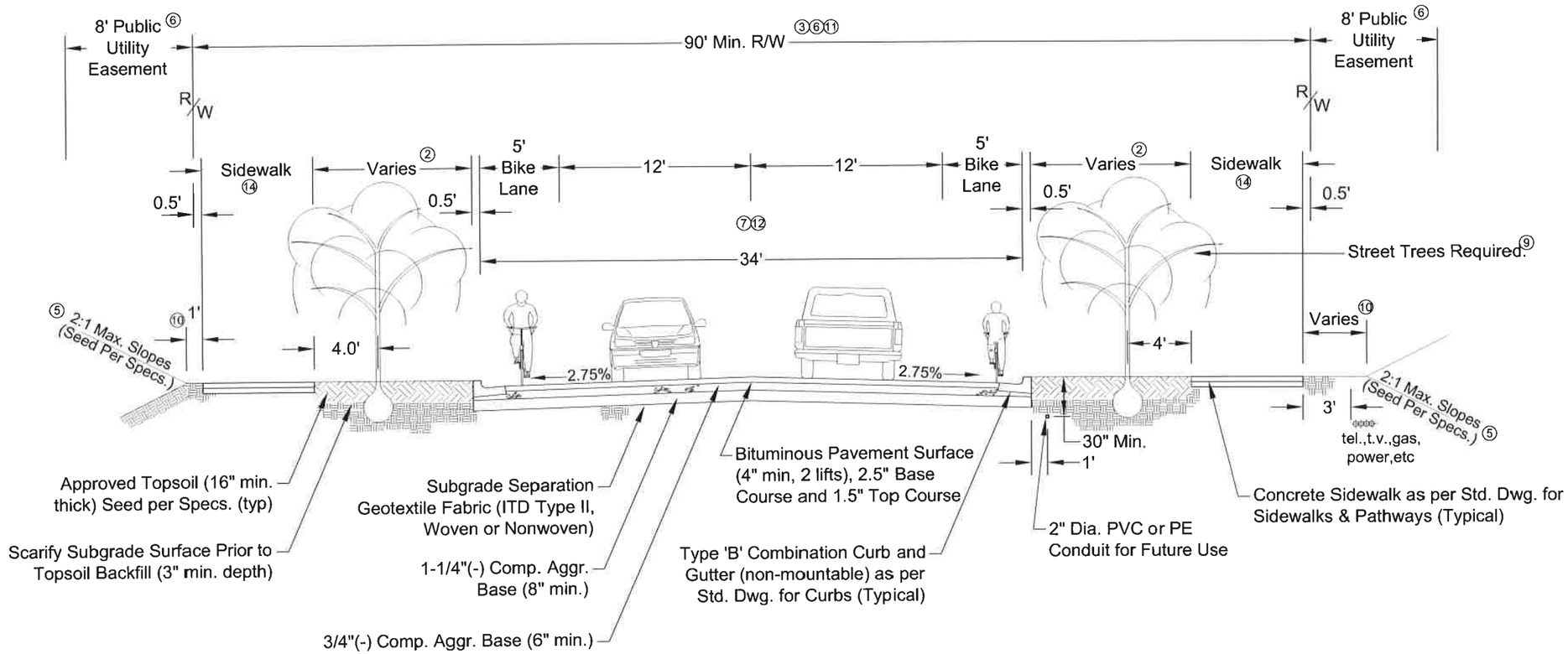

Notes:

1. This street section shall be used as a minimum standard for Minor Arterial class streets in all zones.
2. The green strip may be narrowed to a minimum width of eight feet (8') to accommodate bus pull-outs, additional lanes, and other needs, as approved by City Engineer.
3. Center streets in platted right-of-way, unless approved otherwise by the City Engineer. Additional right-of-way width shall be required as necessary to accommodate topography, utilities, turn lanes, parking, roundabouts, signalized intersections, or other needs as determined by the City Engineer. Additional right-of-way required for transit stops at Minor Arterial and Collector intersections or thousand feet (1000').
4. Compact all subgrade and base aggregate to 95% of AASHTO T99 max. proctor density.
5. Seed all roadside backfill and excavation as per Standard Specifications.
6. Wider platted rights-of-way allow narrower easements, proportionately. Additional easements may be required.
7. Maximum street centerline profile grade shall equal 10.0% or as approved by the City Engineer.
8. Subgrade underdrain systems are required in inherently "wet" areas, as specified by the City Engineer, see Standard Drawing for Subsurface Drainage.
9. Tree selection and planting shall comply with the City's Arboricultural Standards and Specification Guide.
10. This dimension shall be four feet (4') where standard franchise utility pedestals (no transformers) are to be located and shall be six feet (6') where pedestals and an AVISTA power transformer pad is required (see Standard Drawing for Franchise Utility Details).
11. On-street parking (9' width for Residential and 10' width for Commercial/Industrial) is optional in this road standard. If included on one or both sides, additional right-of-way shall be required.
12. A center median is an option in this road standard. Minimum planter width shall be ten feet (10') for Residential and eleven feet (11') for Commercial/Industrial with curbs on each side. Travel lanes adjacent to median shall be increased two feet (2') in width. Additional right-of-way shall be required to accommodate the median, curbs, and additional lane widths.
13. Minor Arterial streets shall be subject to access control. No residential driveways shall be permitted.
14. Minimum sidewalk widths shall be six feet (6') in Residential zones and eight feet (8') in Commercial and Industrial zones. Back of sidewalk to be at the right-of-way line.

REVISIONS	
DATE	DESCRIPTION

PROFESSIONAL ENGINEER REGISTERED 8832 5-19-14 STATE OF IDAHO KEVIN LILLY

DRAFTED BY: C.Edwards
CHECKED BY: K.Lilly
DRAWING SCALE: NTS
DATE: 3-31-2014

Minor Arterial

CITY OF MOSCOW
ENGINEERING DEPARTMENT

DRAWING NUMBER: 1f

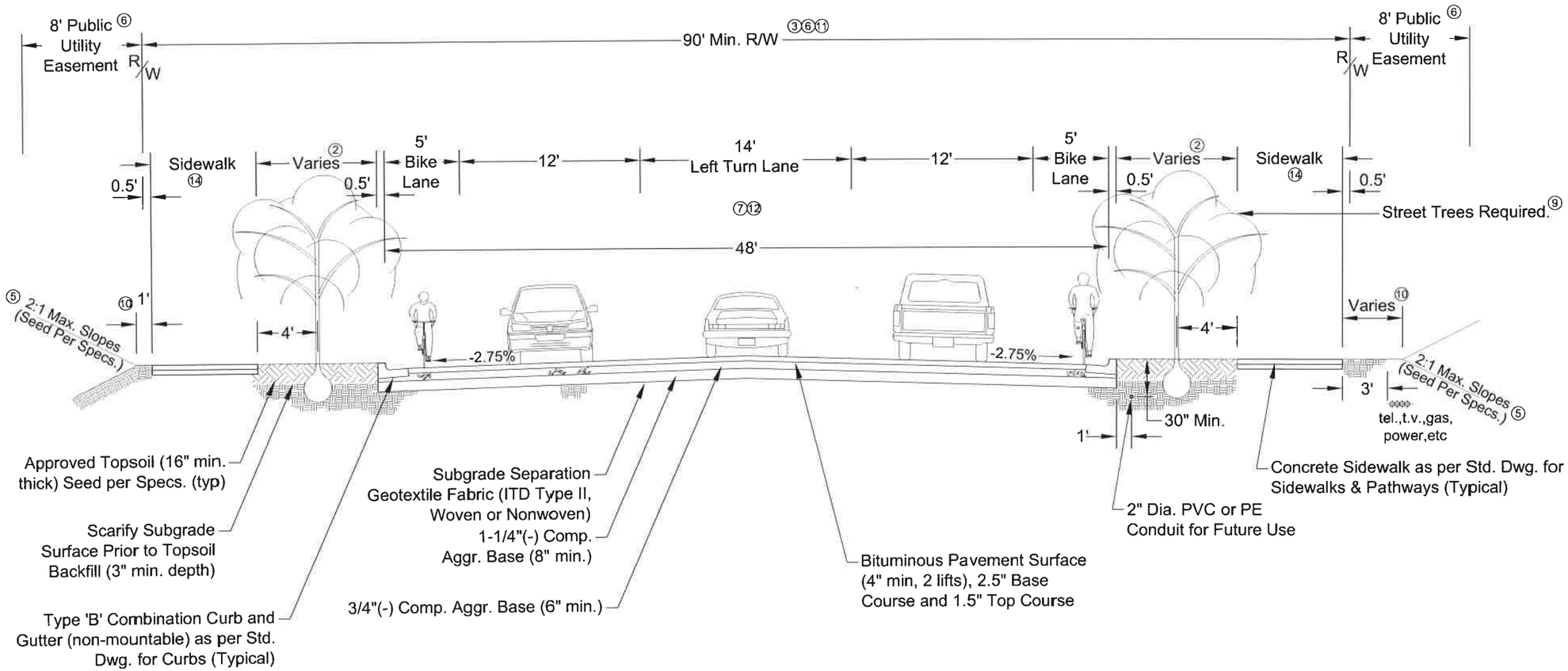

Notes:

1. This street section shall be used as a minimum standard for Minor Arterial class streets in all zones.
2. The green strip may be narrowed to a minimum width of eight feet (8') to accommodate bus pull-outs, additional lanes, and other needs, as approved by City Engineer.
3. Center streets in platted right-of-way, unless approved otherwise by the City Engineer. Additional right-of-way width shall be required as necessary to accommodate topography, utilities, turn lanes, roundabouts, signalized intersections, or other needs as determined by the City Engineer. Additional right-of-way required for transit stops at Minor Arterial and Collector intersections or every thousand feet (1000').
4. Compact all subgrade and base aggregate to 95% of AASHTO T99 max. proctor density.
5. Seed all roadside backfill and excavation as per Standard Specifications.
6. Wider platted rights-of-way allow narrower easements, proportionately. Additional easements may be required.
7. Maximum street centerline profile grade shall equal 10.0% or as approved by the City Engineer.
8. Subgrade underdrain systems are required in inherently "wet" areas, as specified by the City Engineer, see Standard Drawing for Subsurface Drainage.
9. Tree selection and planting shall comply with the City's Arboricultural Standards and Specification Guide.
10. This dimension shall be four feet (4') where standard franchise utility pedestals (no transformers) are to be located and shall be six feet (6') where pedestals and an AVISTA power transformer pad is required (see Standard Drawing for Franchise Utility Details).
11. On-street parking (9' width for Residential and 10' width for Collect/industrial) is optional in this road standard. If included on one or both sides, additional right-of-way shall be required.
12. A center curbed median is an option in this road standard. Minimum median planter width shall be ten feet (10') for Residential and eleven feet (11') for Commercial/Industrial with curbs on each side. Travel lanes adjacent to median shall be increased two feet (2') in width. Additional right-of-way shall be required to accommodate the median, curbs, and additional lane widths.
13. Minor Arterial streets shall be subject to access control. No residential driveways shall be permitted.
14. Minimum sidewalk widths shall be six feet (6') in Residential zones and eight feet (8') in Commercial and Industrial zones. Back of sidewalk to be at the right-of-way line.

REVISIONS	
DATE	DESCRIPTION

PROFESSIONAL ENGINEER REGISTERED 8832 5-19-14 STATE OF IDAHO KEVIN LILLY

DRAFTED BY: C.Edwards
CHECKED BY: K.Lilly
DRAWING SCALE: NTS
DATE: 3-31-2014

Minor Arterial With Left Turn Lane

CITY OF MOSCOW
ENGINEERING DEPARTMENT

DRAWING NUMBER: 1g

NOTES:

1. No parking allowed on either side of street.
2. Use of this street standard shall be limited to areas with low potential for "pass through" traffic and shall not conflict with or hinder the public street system configuration and logical extensions.

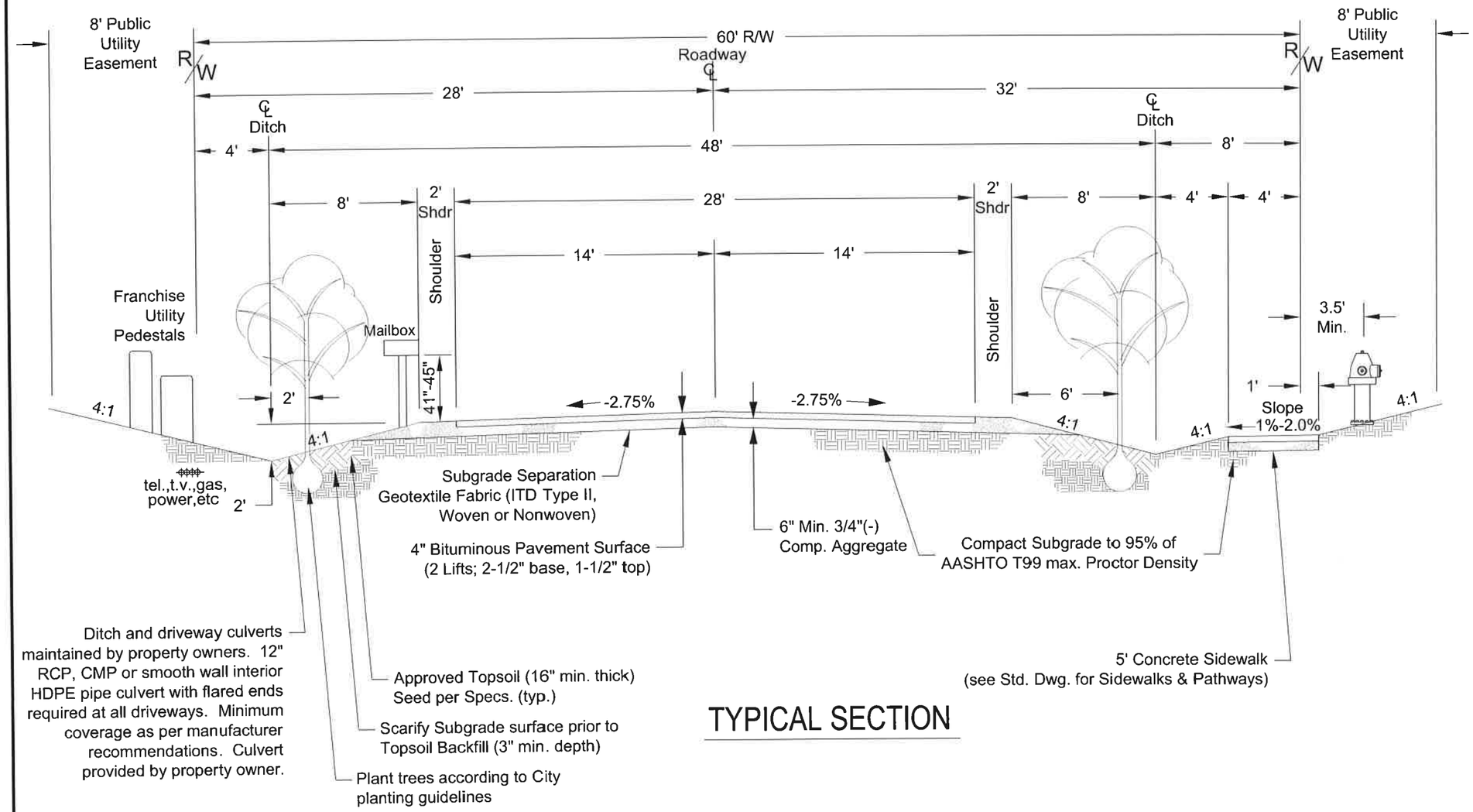

TYPICAL SECTION

REVISIONS	
DATE	DESCRIPTION

SIGNED AND DATED

PROFESSIONAL ENGINEER REGISTERED 8832 STATE OF IDAHO KEVIN LILLY 5-19-14

DRAFTED BY: K.Kipp / C.Edwards

CHECKED BY: K.Lilly

DRAWING SCALE: NTS

DATE: 2-26-2014

LARGE LOT SUBDIVISION STREET STANDARD

CITY OF MOSCOW
ENGINEERING DEPARTMENT

DRAWING NUMBER: 1h

NOTES:

1. No parking allowed on either side of alley.
2. "No Parking in Alley" signage to be installed by developer in accordance with MUTCD and City Specifications if required by City Engineer.
3. Drainage system required as approved by the City Engineer.
4. Geotechnical Engineering assessment of soil conditions may be required by City Engineer to determine if additional asphalt pavement and aggregate base depth will be required.
5. Truncated domes are required at sidewalk crossings of public alleys.

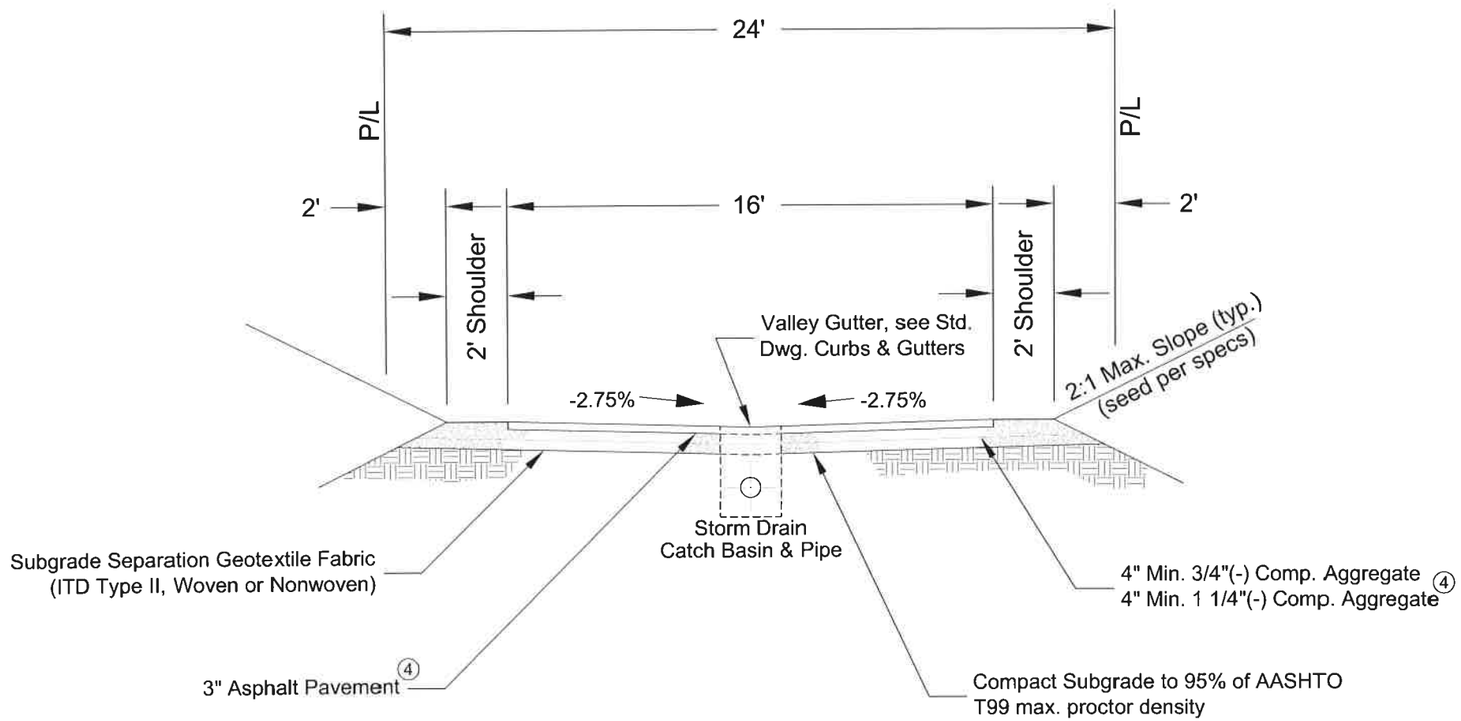

TYPICAL SECTION

REVISIONS	
DATE	DESCRIPTION

SIGNED AND DATED

PROFESSIONAL ENGINEER REGISTERED 8832 STATE OF IDAHO KEVIN LILLY 3-5-14

DRAFTED BY: C.Edwards

CHECKED BY: K.Lilly

DRAWING SCALE: NTS

DATE: 3-5-2014

PUBLIC ALLEY

CITY OF MOSCOW
ENGINEERING DEPARTMENT

DRAWING NUMBER: 2

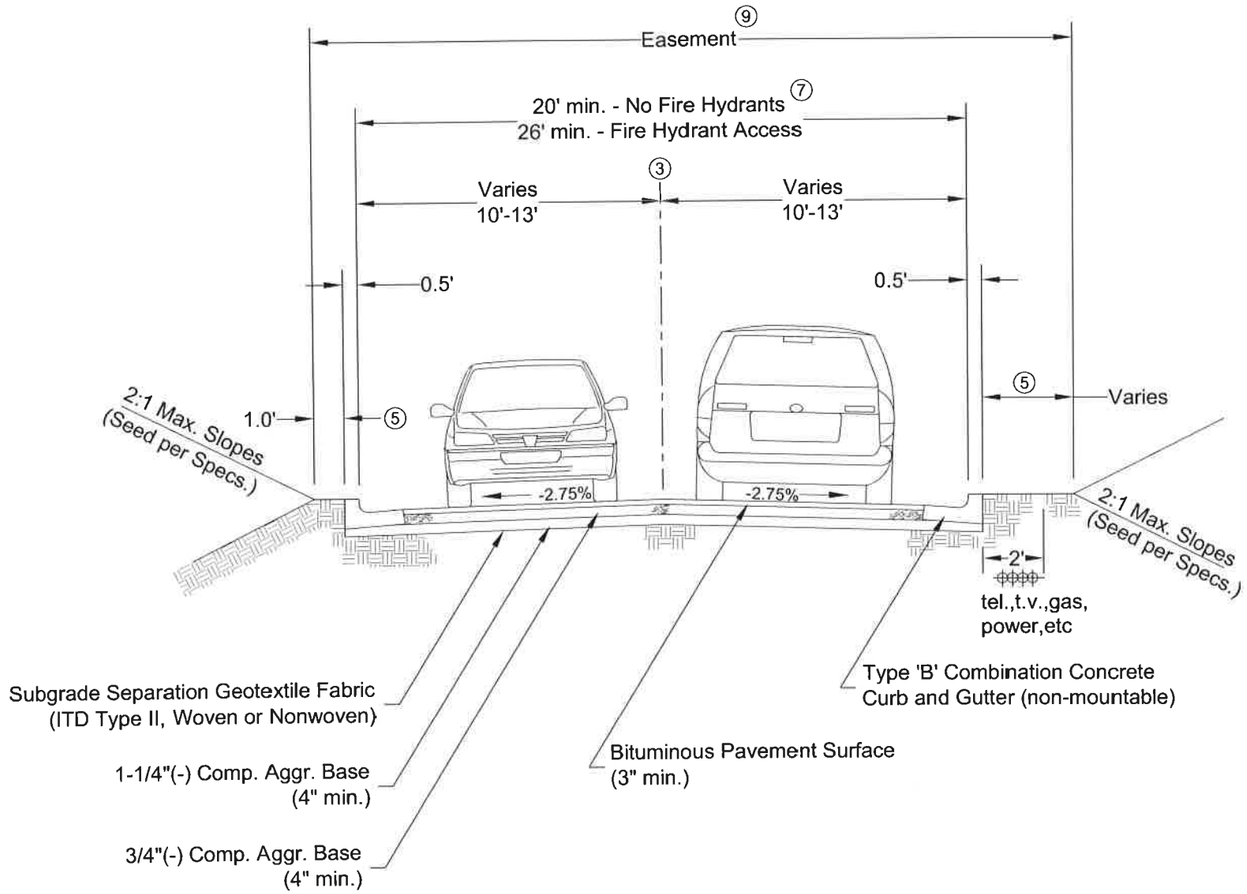

NOTES:

1. Compact all subgrade and aggregate base to 95% of AASHTO T99 max. proctor density.
2. Seed all roadside backfill and excavations as per specifications.
3. Maximum centerline profile grade equals 10.0% or as approved by the City Engineer. Additional easements may be required as necessary.
4. Subgrade underdrain systems are required in inherently "wet" areas, as specified by the Engineer.
5. This dimension shall be four feet (4') where standard franchise utility pedestals (no transformers) are to be located and shall be six feet (6') where pedestals and an AVISTA power transformer pad is required (see Standard Drawing for Franchise Utility Details).
6. Sidewalks, vehicular cubs cuts/approaches, and pedestrian drops shall comply with City Sitandards where required and installed.
7. Designated fire lanes shall be signed for no parking and curbs (if present) shall be painted yellow. Additional width my be required for Fire Department access.
8. Gates shall not be permitted.
9. Public utility and franchise utility easements shall be provided per City Standards for utilities within the roadway area.
10. Private streets shall be limited in use to Planned Unit Developments (PUD) and shall not conflict with or hinder the public street system configuration and logical extensions. Private streets shall not promote "pass through" traffic between public streets.
11. Sidewalks or other pedestrian pathways shall be installed if required by the PUD process and shall be a minimum of five feet (5') in width.
12. City shall not provide any maintenance, repair, or snow removal on private streets.
13. A street light shall be installed at each intersection of a private street with a public street per the Residential Street Lighting Standard Drawing.
14. Vertical and horizontal alignment of private streets shall meet the requirements for Fire Department access as per the International Fire Code.

REVISIONS	
DATE	DESCRIPTION

PROFESSIONAL ENGINEER
REGISTERED
8832
5-19-14
STATE OF IDAHO
KEVIN LILLY

DRAFTED BY: C.Edwards
CHECKED BY: K.Lilly
DRAWING SCALE: NTS
DATE: 2-26-2014

PRIVATE STREETS

CITY OF MOSCOW
ENGINEERING DEPARTMENT

DRAWING NUMBER: 3

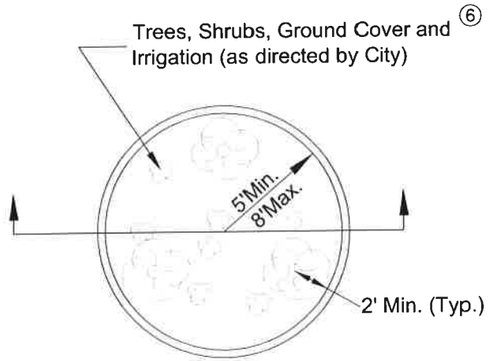

PLAN

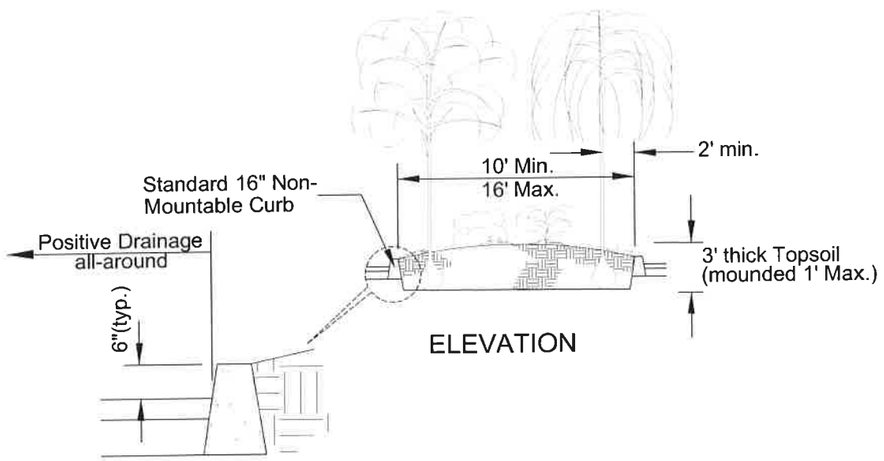

ELEVATION

OPTIONAL PLANTER ISLAND

DETAIL "A"

Not to Scale

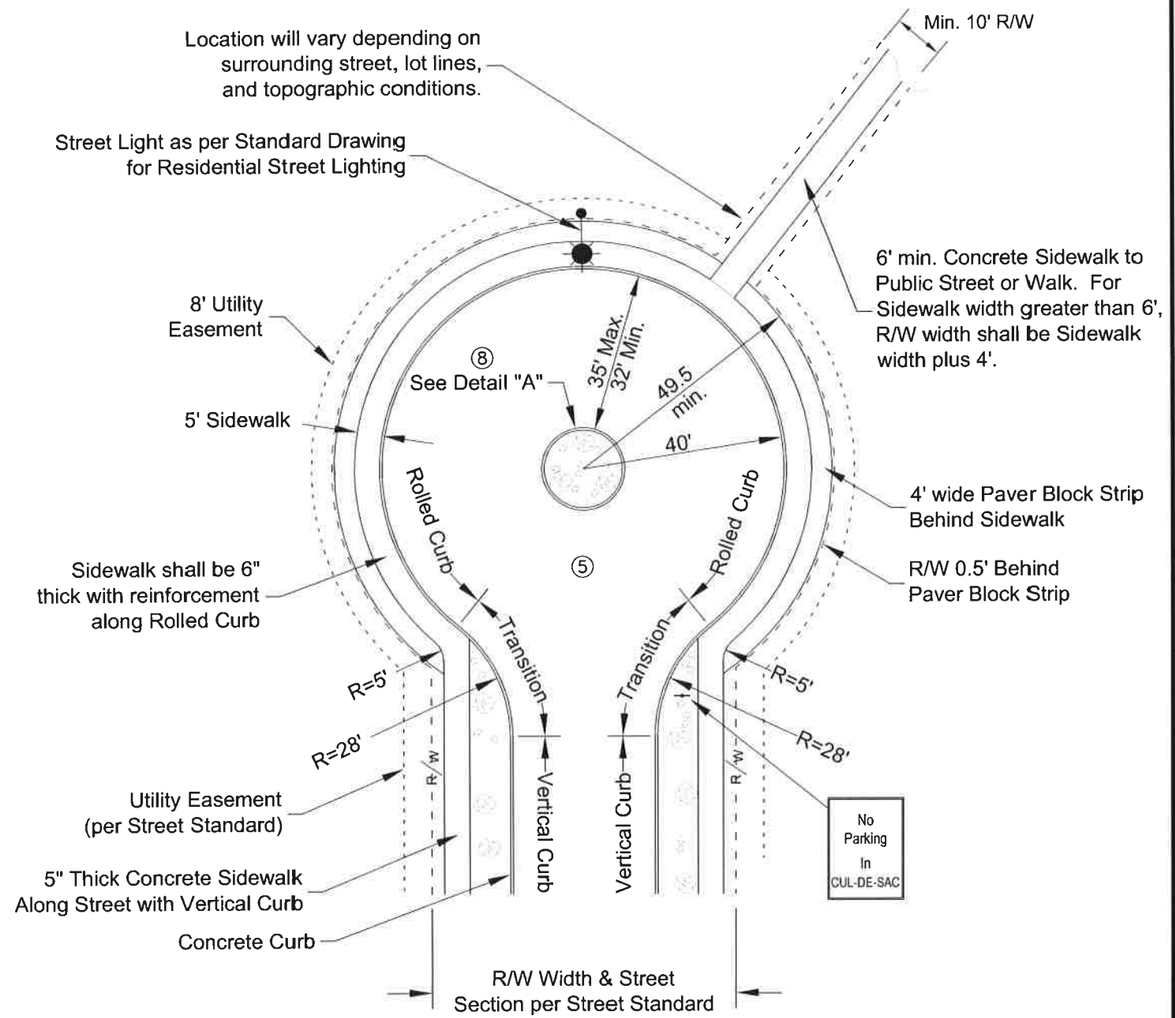

CUL-DE-SAC

NOTES:

1. Use of cul-de-sac and 'dead end' streets shall be limited to promote street connectivity and emergency vehicle access. Cul-de-sacs shall only be allowed when topographic conditions or other factors prohibit reasonable extension of the street.
2. Center cul-de-sacs and turnarounds in platted right-of-way unless otherwise approved by the City Engineer.
3. All signs to be furnished and installed by 'Developer'. Signs and installation to be in accordance with MUTCD and City Specifications.
4. Tree selection an planting shall comply wit the City's Arboricultural Standards and Specification Guide.
5. All cul-de-sacs to be constructed with a minimum of 1.0% sloping surface to drain.
6. All curb radii dimensions are measured as per the Standard Drawing for Curbs.
7. Seed all cut/fill slopes and green strips per city specifications.
8. Installation of optional Planter Island as per approval by the City Engineer.
9. 'Not A Through Street' sign required at the entrance of cul-de-sac streets.
10. No utility poles, lights standards, mailboxes, fire hydrants, or other vertical features allowed in sidewalk or paver block strip within cul-de-sac.
11. Geotechnical Engineering assessment of soil conditions may be required by City Engineer to determine if additional asphalt pavement and aggregate base depth will be required.

REVISIONS	
DATE	DESCRIPTION

PROFESSIONAL ENGINEER REGISTERED 8832 5-9-14 STATE OF IDAHO KEVIN LILLY

DRAFTED BY: K.Kipp / C.Edwards

CHECKED BY: K.Lilly

DRAWING SCALE: NTS

DATE: 2-26-2014

CUL-DE-SAC DETAILS

CITY OF MOSCOW
ENGINEERING DEPARTMENT

DRAWING NUMBER: 4

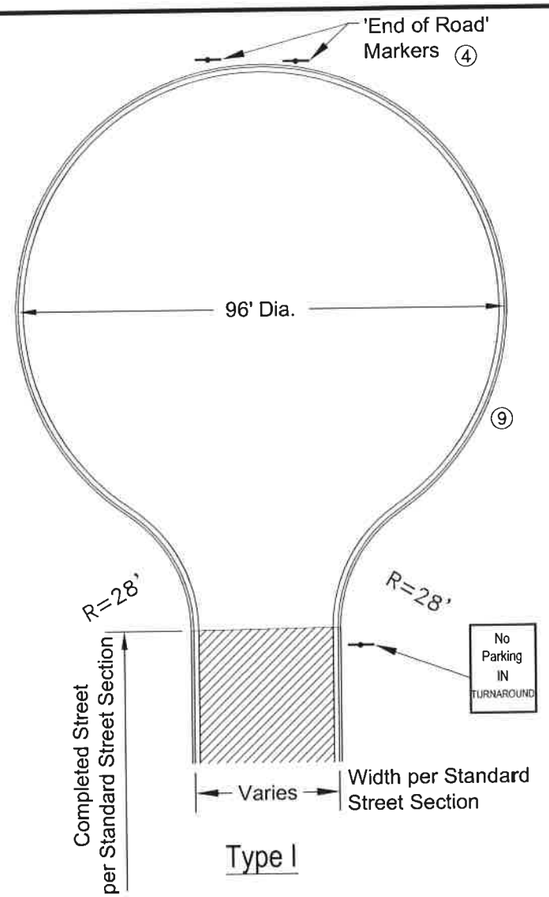

Type I

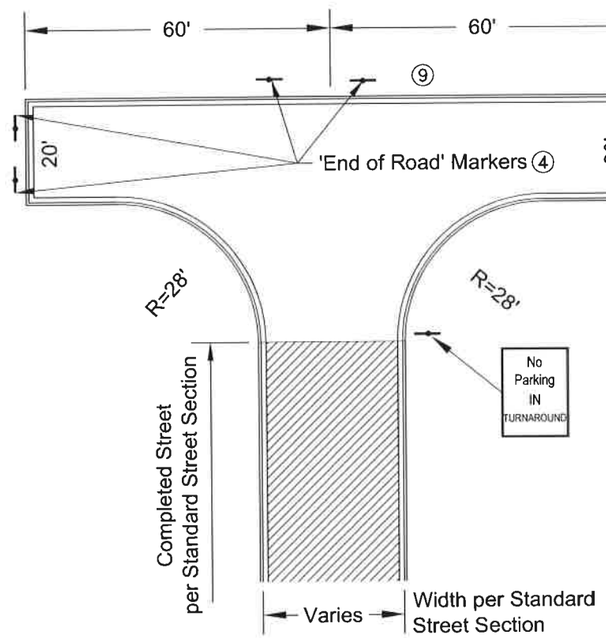

Type II

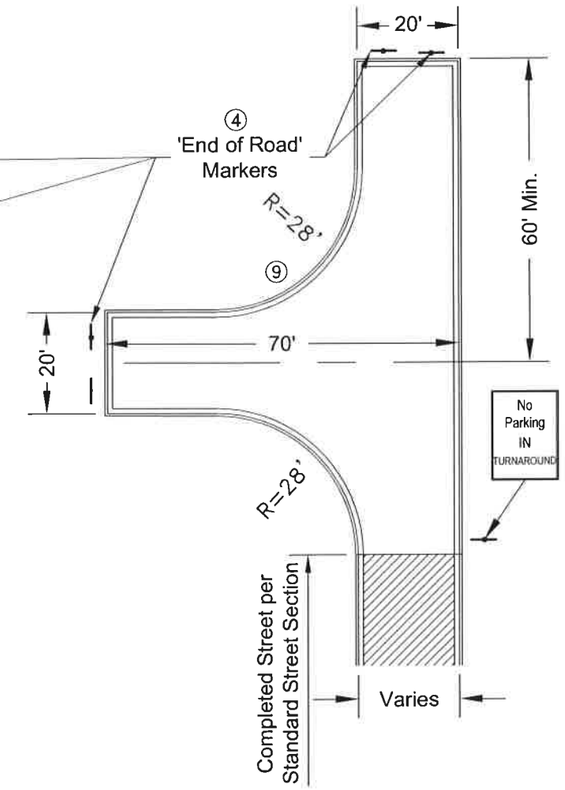

Type III

NOTES:

1. Other configurations may be approved by the City Engineer and Fire Marshal; basic dimensional criterion shown herein must be satisfied.
2. Temporary easements must be granted for those portions of temporary turnarounds outside of platted public utility easements and rights-of-way.
3. Temporary turnarounds may be designed to include driveways; public easement required.
4. 'End of Roadway' markers per Standard Drawing for End of Road Marker & Dead End Signs must be placed as shown.
5. All signs to be furnished and installed by 'Developer.' Signs and installation to be in accordance with MUTCD and City Specifications.
6. One street light required. Locate as per Standard Drawing for Residential Street Lighting.
7. Temporary turnarounds with steep embankments exceeding three feet (3') in height must have guardrail or barrier protection; as required and/or approved by the City Engineer.
8. Temporary turnarounds shall be designed to provide a minimum drainage slope of 1% to an approved public storm drainage system; including catch basins and piping, as required.
9. Curb, Type 'B' required all-around or as approved by the City Engineer.

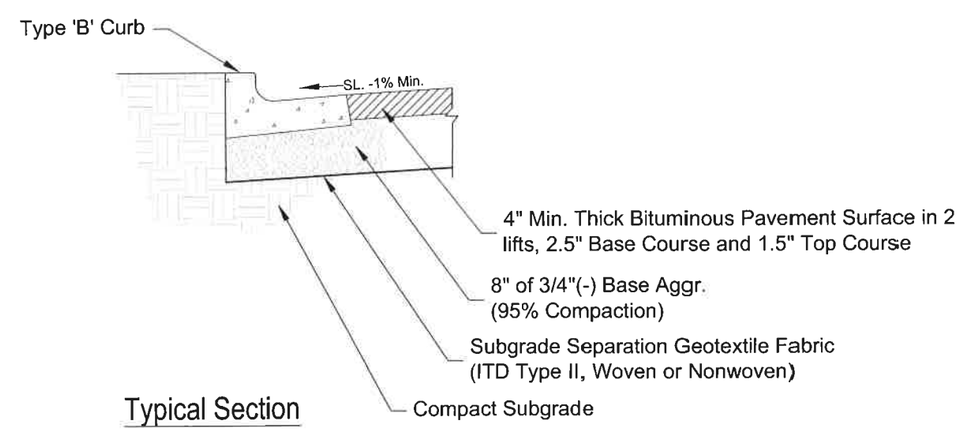

Typical Section

REVISIONS	
DATE	DESCRIPTION

PROFESSIONAL ENGINEER REGISTERED 8832 5-19-14 STATE OF IDAHO KEVIN LILLY

DRAFTED BY: C.Edwards
CHECKED BY: K.Lilly
DRAWING SCALE: NTS
DATE: 3-5-2014

TEMPORARY TURNAROUND

CITY OF MOSCOW
ENGINEERING DEPARTMENT

DRAWING NUMBER: 5

NOTES:

1. Replacement curb and sidewalk may be cast monolithic with prior approval of City Engineer.
2. Sidewalk to back-of-curb slope may not exceed 12:1 without City Engineer's approval.
3. Light broom finish curb parallel with the long axis of curb.
4. Rolled curb prohibited where sidewalk is adjacent to curb, unless specially allowed by the City Engineer. In areas without planter strips, sidewalks adjacent to to rolled curb shall be a minimum of six inches (6") thick.
5. All curb roadway planimetric radii dimensions shall be measured to the "Radii Dimension Line"shown in the typical curb section.
6. See table for curb radii requirements. Thirty foot (30') curb radii are required where any City street intersects an Idaho Transportation Department roadway.
7. 'Shed' section streets require 'spill curb' on the uphill side with gutter matching street cross slope.
8. Type 'A' curb only allowed where extending or replacing existing Type 'A' Curb.
9. Type 'C' curb only allowed in cul-de-sacs and where replacing existing rolled curb.

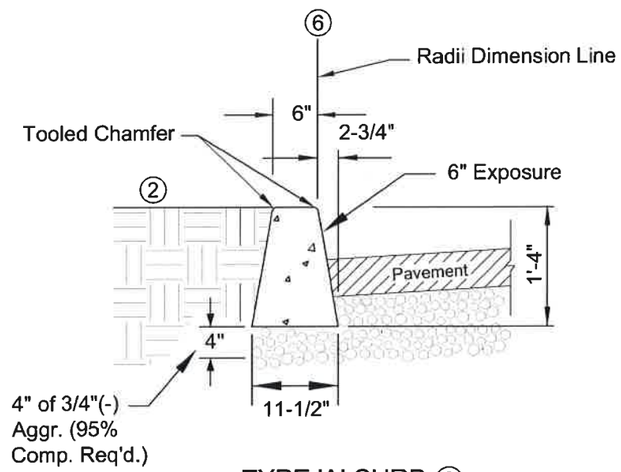

TYPE 'A' CURB ⑧

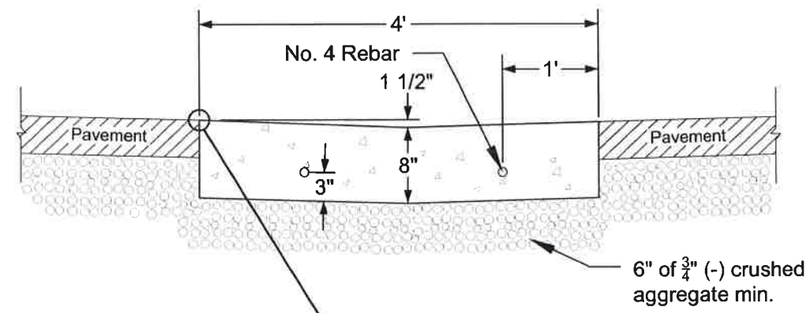

TYPE 'D' - VALLEY GUTTER

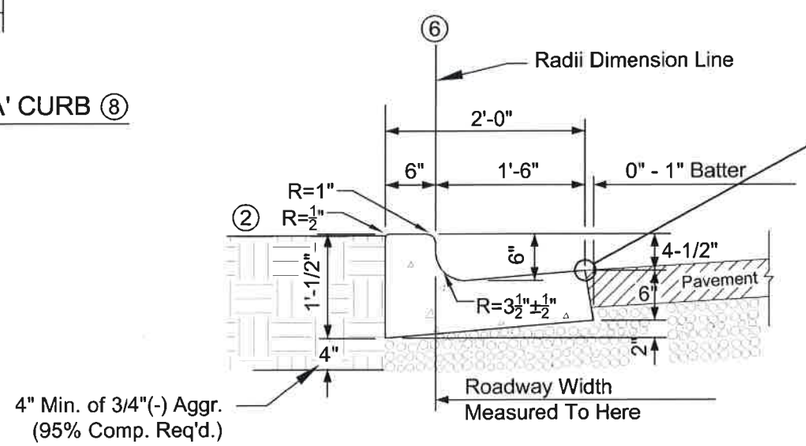

TYPE 'B' - COMBINATION CURB & GUTTER

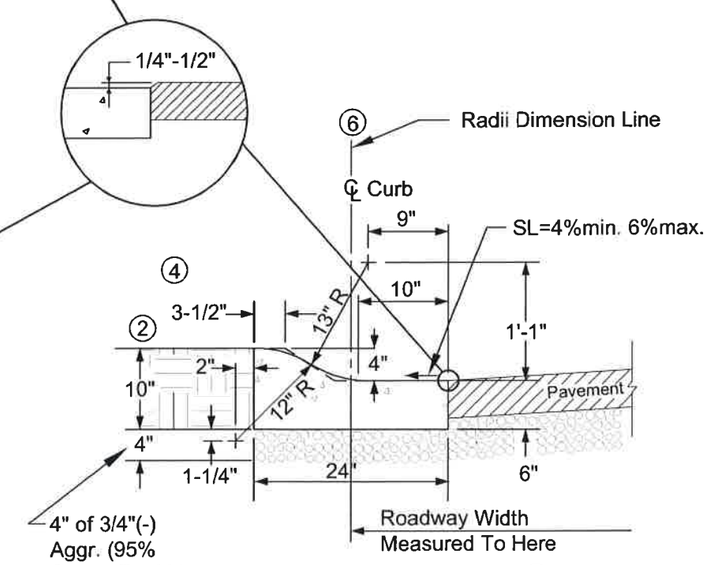

TYPE 'C' - ROLLED CURB ⑨

CURB RADII REQUIREMENTS	
Intersecting Street Classification	Curb Radii Dimension
Local - Local	15'
Local - Collector	15'
Local - Arterial	25'
Collector - Collector	25'
Collector - Arterial	25'
Arterial - Arterial	30'

REVISIONS

DATE	DESCRIPTION

SIGNED AND DATED

PROFESSIONAL ENGINEER REGISTERED 8832 STATE OF IDAHO KEVIN LILLY 2-1-18

DRAFTED BY: C.Edwards / K.Kipp
CHECKED BY: K.Lilly
DRAWING SCALE: NTS
DATE: 3-5-2014

CURBS & GUTTERS

CITY OF MOSCOW
ENGINEERING DEPARTMENT

DRAWING NUMBER: 6

NOTES:

1. Minimum sidewalk widths shall be five feet (5') for local streets. For sidewalk widths for collectors and arterials, see Standard Street Section Drawings. Pathway width shall be ten feet (10') unless otherwise approved by the City Engineer.
2. Maximum cross slope of 2.0%; minimum cross slope of 1% - pathway cross slope may be 'crown' or 'shed'. Maximum sustained longitudinal grade for pathways of 5%. Pathways shall be free of humps, dips, or unnecessary curves.
3. Curb and sidewalk may be cast monolithic for repairs only with prior approval of City Engineer.
4. Slope from sidewalk to back-of-curb may not exceed 12:1 without City Engineer's approval.
5. Green strip required between curb and sidewalk width as specified in Standard Street Section Drawings. In areas of excessive cuts and fills, width may be reduced, as approved by the City Engineer.
6. Sidewalks shall be five inches (5") thick as shown on this drawing - with the following exceptions:
   a. Sidewalks through driveways shall be six inches (6") thick and constructed per the Std. Dwg. for Driveway Approaches.
   b. Sidewalks constructed adjacent to rolled curb shall be six inches (6") thick and reinforced as shown on this drawing.
   c. Reinforcement as directed by City Engineer.
7. Coarse broom finish sidewalk concrete perpendicular to the long axis of sidewalk; light broom finish curb concrete parallel to the long axis of curb.
8. This dimension shall be four feet (4') where standard franchise utility pedestals (excluding transformers) are to be located and shall be six feet (6') where pedestals and an AVISTA power transformer pad is required (see Standard Drawing for Franchise Utility Details).
9. Any trees adjacent to or with branches overhanging the pathway shall be kept trimmed such that ten feet (10') of both vertical and horizontal clearance exists between any branches and the pathway. Landscape vegetation cannot overhang sidewalk.
10. If fall protection is required by code, railing should be installed with a minimum height of 42" and a minimum height of 54" for bridges. Railing style must be approved by City Engineer.
11. 'Select' native backfill shall be free of clods, roots, gravel, and other inert material and shall be neatly graded to blend with the path and the adjoining ground. Backfill shall be compacted to 90% within 2' of path edge.
12. Furnish and install drainage culverts as required and as directed by the City Engineer.

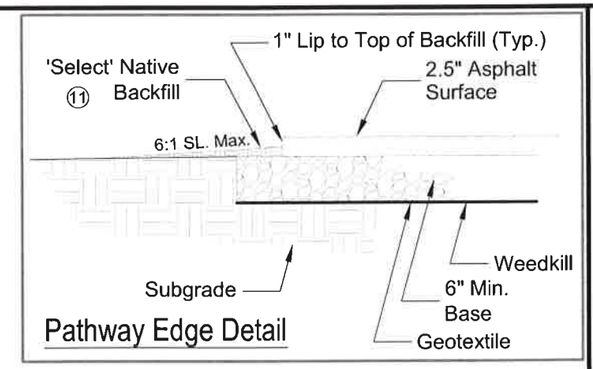

Pathway Edge Detail

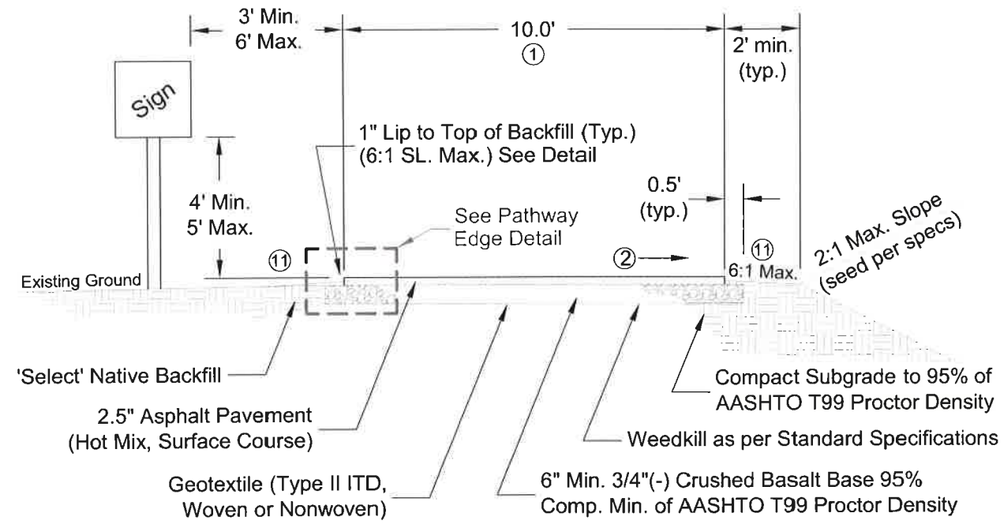

PATHWAY
TYPICAL SECTION

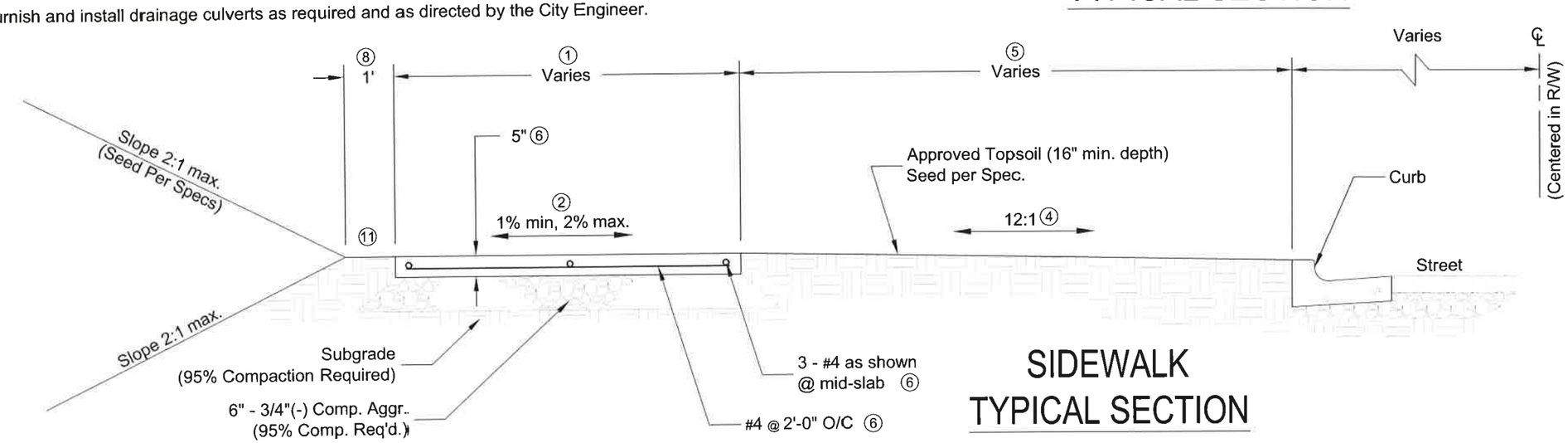

SIDEWALK
TYPICAL SECTION

REVISIONS	
DATE	DESCRIPTION

SIGNED AND DATED

PROFESSIONAL ENGINEER REGISTERED 8832 5-19-14 STATE OF IDAHO KEVIN LILLY

DRAFTED BY: C.Edwards
CHECKED BY: K.Lilly
DRAWING SCALE: NTS
DATE: 3-5-2014

SIDEWALKS & PATHWAYS

CITY OF MOSCOW
ENGINEERING DEPARTMENT

DRAWING NUMBER: 7

NOTES:

1. Moscow Standard Construction Specifications apply. Pedestrian ramps must comply with current Americans with Disability Act (ADA) Accessibility Guidelines.
2. All ramps shall be textured with Detectable Warnings, "Truncated Domes" as required by the current ADA Guidelines and as allowed by the City Engineer. The truncated domes shall extend the the full width of the flush curb ramp and two feet (2') radial to back of curb. Truncated Domes shall be prefabricated plate units cast monolithic with the concrete and set flush and to manufactured specifications. Coarse broom finish the remainder of the ramp.
3. All curb roadway planimetric radii dimensions shall be measured to the 'Radii Dimension Line' shown in the typical curb sections. See Standard Drawing for Curbs & Sidewalks. Curb radii shall conform to "Curb Radii Requirements" table in Standard Drawing for Curbs & Gutters.
4. Light broom finish curbs and gutters parallel with the long axis of the curb and/or curb and gutter. Coarse broom finish sidewalks perpendicular to the long axis of sidewalk.
5. Rolled curb section properties may vary from those shown as specifically allowed by the City Engineer.
6. Sidewalk constructed in driveway locations shall be six inches (6") thick and reinforced, all as per Standard Drawing for Driveway Approaches.
7. Specified 2.0% cross-slopes shall be 1% minimum and 2.0% maximum.
8. Construct curb or sloped (4:1) backfill - as required and/or allowed by the City Engineer.
9. Type I or Type II pedestrian ramp is the required standard; Type III, IV, or V ramps may be allowed in special circumstances as approved by the City Engineer.
10. Curb and sidewalk may be cast monolithic with prior approval of City Engineer.

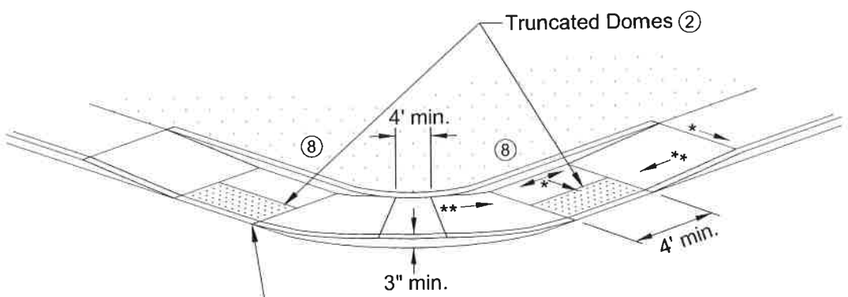

Type I
(Typical - Both Ramps)

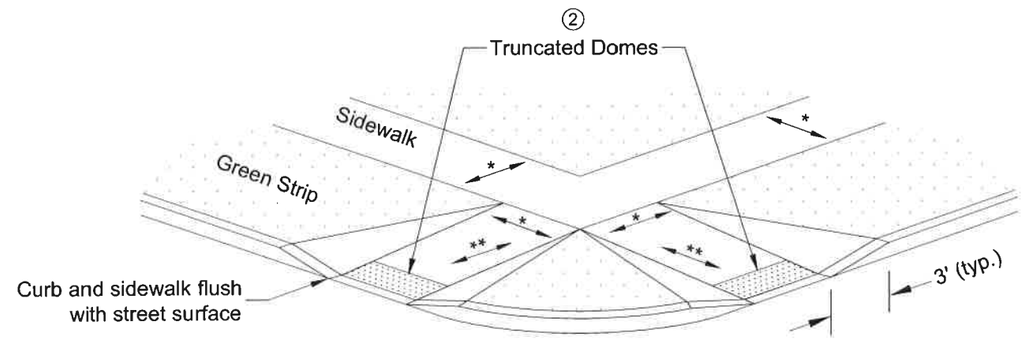

Type II

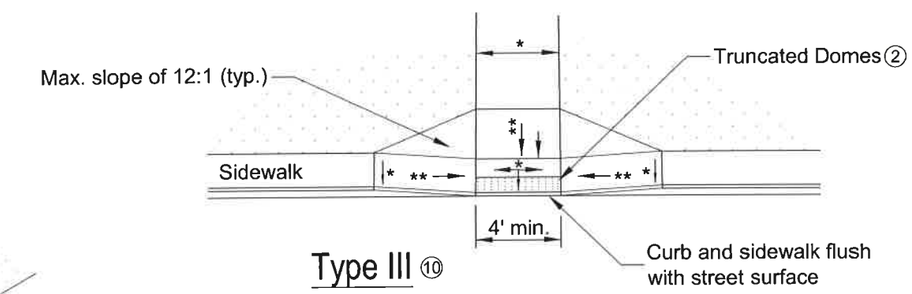

Type III ⑩

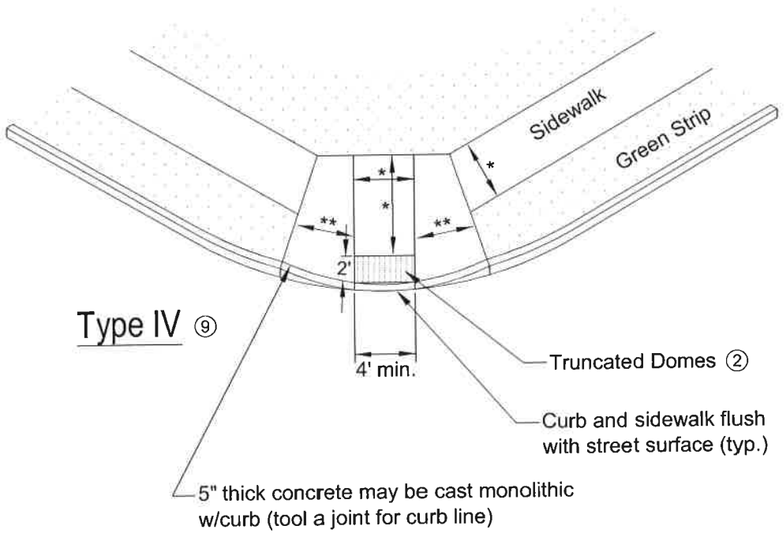

Type IV ⑨

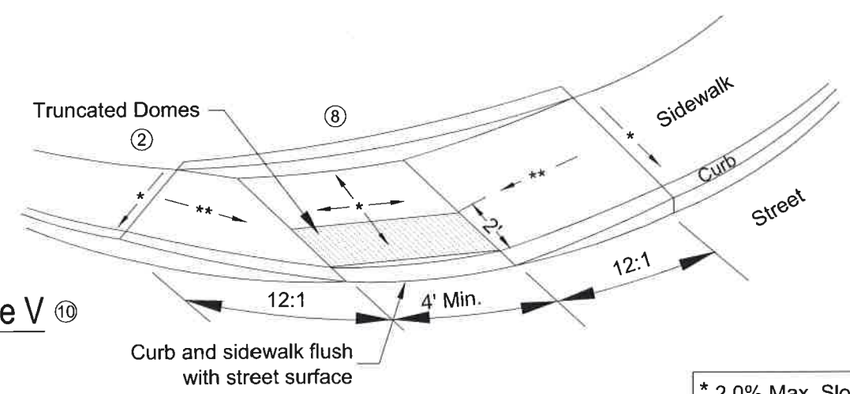

Type V ⑩

* 2.0% Max. Slope ⑧
** 12:1 Max. Slope

REVISIONS	
DATE	DESCRIPTION

SIGNED AND DATED

PROFESSIONAL ENGINEER REGISTERED 8832 5-19-14 STATE OF IDAHO KEVIN LILLY

DRAFTED BY: K.Kipp / B.Buvel C.Edwards
CHECKED BY: K.Lilly
DRAWING SCALE: NTS
DATE: 3-5-2014

PEDESTRIAN RAMPS

CITY OF MOSCOW
ENGINEERING DEPARTMENT

DRAWING NUMBER: 8

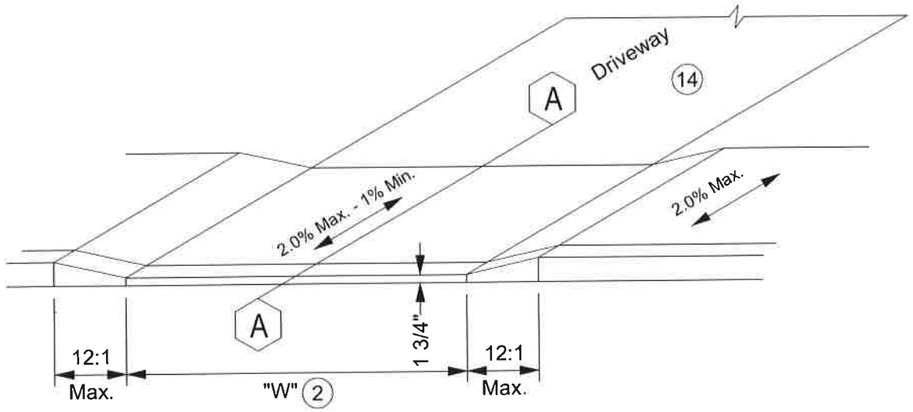

TYPE I

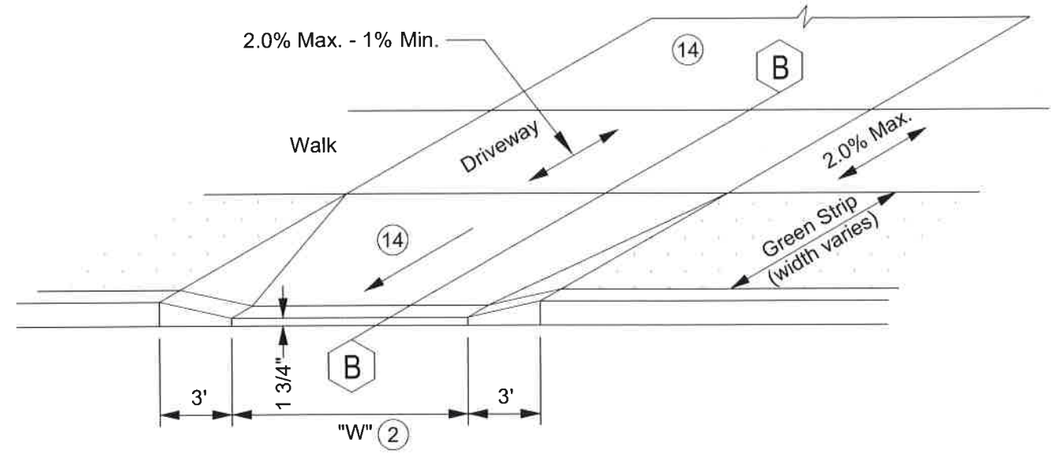

TYPE II

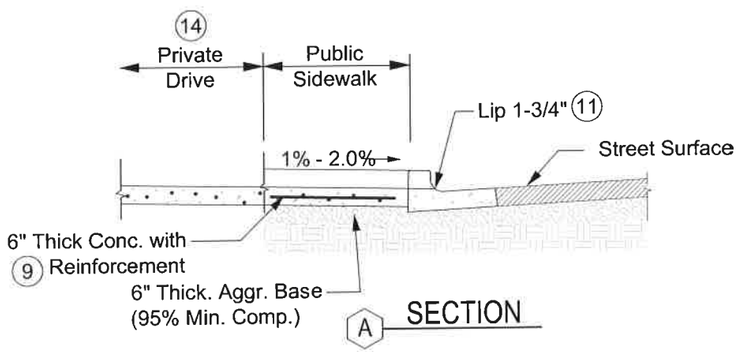

SECTION

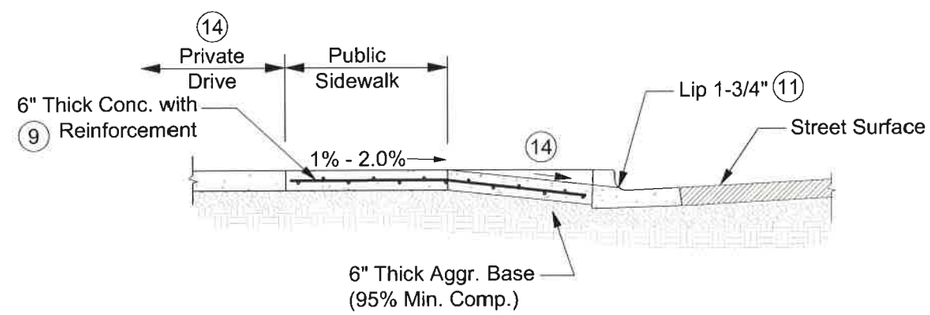

SECTION

NOTES:

1. Existing curb and sidewalk section to be removed (sawcuts required) prior to construction of vehicular approaches.
2. The width "W" of a vehicle approach providing access to residential uses shall be a maximum of twenty feet (20'). Vehicle approaches providing two-way access to commercial uses shall be a maximum of thirty feet (30') wide unless a wider width is deemed appropriate by the City Engineer.
3. Vehicle approaches shall be located at least thirty feet (30') from the intersection of the curb line of an intersecting street.
4. Approaches shall be limited to one per street frontage for each lot, with the following exceptions:
   a. Two twenty foot (20') curb cuts may be permitted to commercial uses where one cut will be egress only and the other ingress only.
   b. Additional approaches may be authorized by the City Engineer where, in his/her opinion, an exceptionally long street frontage or traffic conditions in the area justify such approaches.
5. Truncated domes are not to be installed in sidewalk at driveways.
6. A City of Moscow excavation permit is required to construct new driveways through existing curbs and sidewalks.
7. Curb and sidewalk may be cast monolithic with prior approval of City Engineer. (Strike dummy joint at back of curb)
8. Driveways within State of Idaho right-of-way are subject to Idaho Transportation Department standards and permits. Inquire at Moscow Engineering Department (208-883-7034).
9. Reinforcement shall be 6 x 6 - W2.1 / 2.1 welded wire mesh or No. 4 rebar @ 1'-0" centers each way centered in slab.
10. Forms shall be inspected by the City prior to placing concrete. No Exceptions.
11. Lip height shall be 1-3/4" (plus/minus 1/4").
12. Vehicle approaches per this standard required for all driveways.
13. In areas with rolled curb, the number of driveways shall not exceed the number of curb cuts allowed per lot (as per Zoning Code Section 6-4).
14. Allowed gradient per Driveway Grade Limitation Standard Drawing.

REVISIONS	
DATE	DESCRIPTION

SIGNED AND DATED

PROFESSIONAL ENGINEER REGISTERED 8832 5-19-14 STATE OF IDAHO KEVIN LILLY

DRAFTED BY: K.Kipp / C.Edwards

CHECKED BY: K.Lilly

DRAWING SCALE: NOT TO SCALE

DATE: 3-5-2014

DRIVEWAY APPROACHES

CITY OF MOSCOW
ENGINEERING DEPARTMENT

DRAWING NUMBER: 9

TYPICAL SECTION

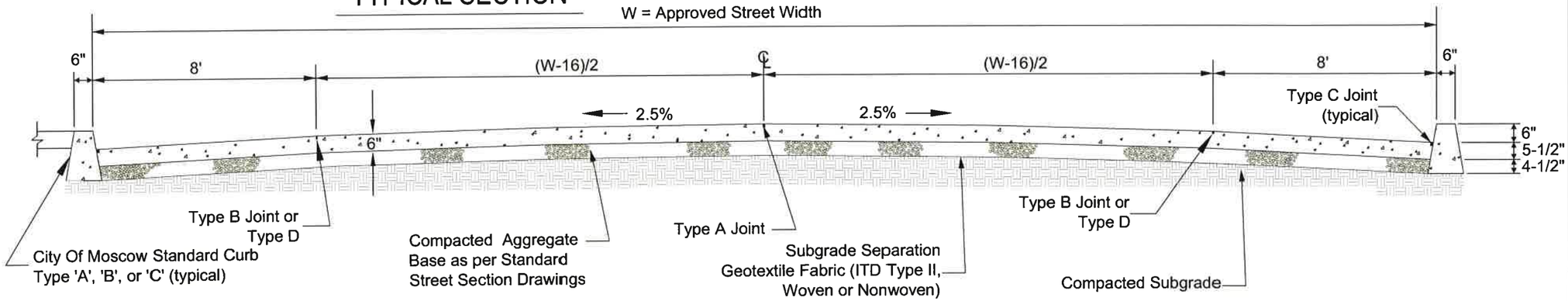

TYPE A

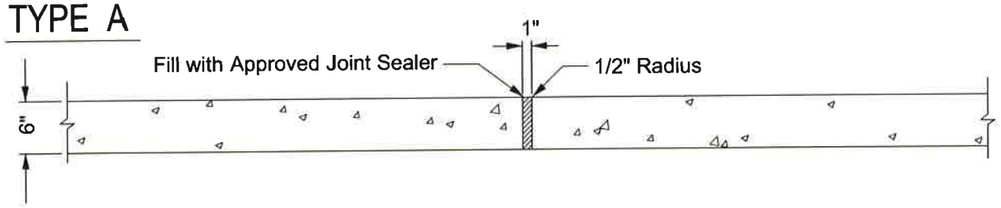

TYPE B

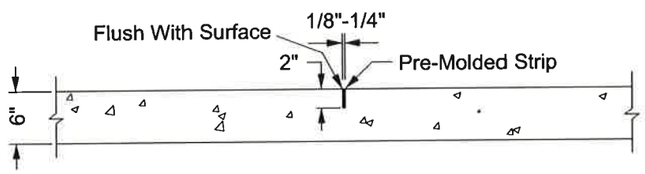

TYPE C

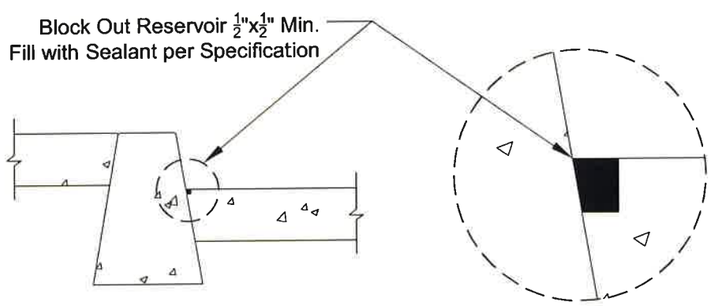

TYPE D

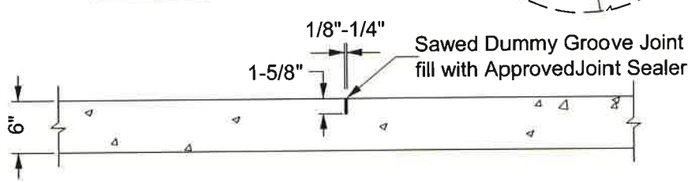

TYPE E

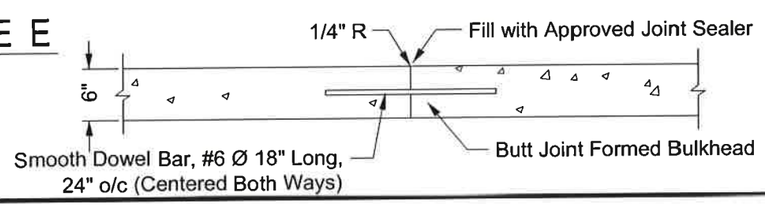

JOINT LAYOUT PLAN

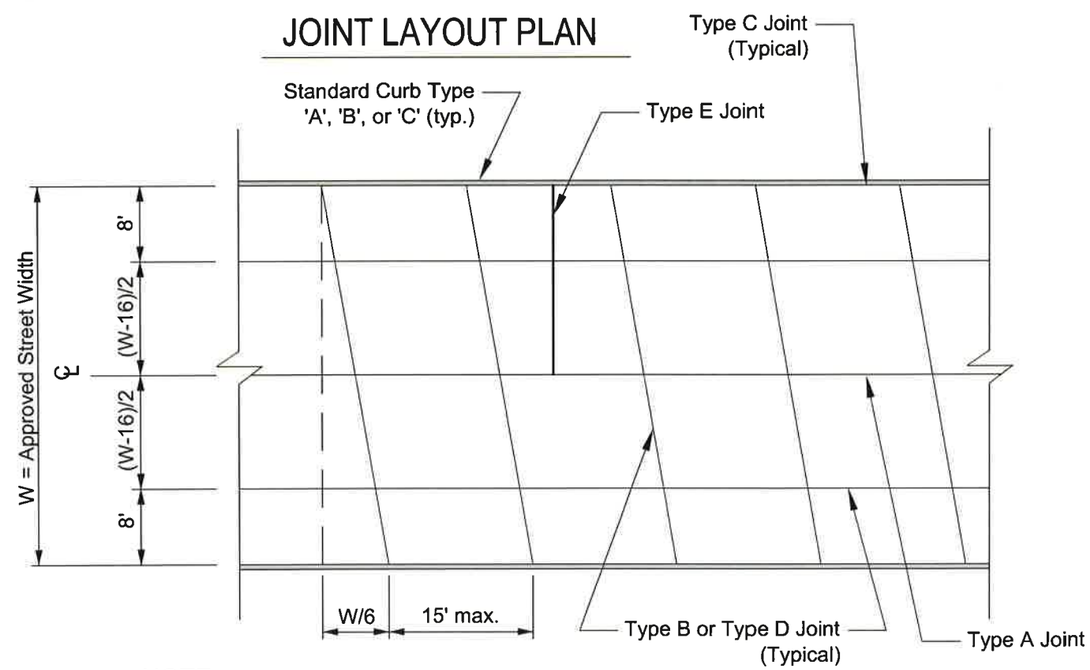

NOTE:

1. The repair of cement concrete street shall include the installation of 9" long 5/8" diameter steel dowels @ 1'-0" o/c @ mid slab, drilled and tightly driven or epoxied 4.5" into the existing slab.
2. Contractor shall submit a pavement joint pattern for entire project for approval by City Engineer.
3. When possible, manholes and other appurtenances shall be centered between joints.
4. Compact all subgrade and base aggregate to 95% of AASHTO T99 max. proctor density.
5. Cement concrete pavement allowed when approved by the City Engineer.

REVISIONS	
DATE	DESCRIPTION

SIGNED AND DATED

PROFESSIONAL ENGINEER REGISTERED 8832 5-19-14 STATE OF IDAHO KEVIN LILLY

DRAFTED BY: K.Kipp / C.Edwards

CHECKED BY: K.Lilly

DRAWING SCALE: NTS

DATE: 3-5-2014

CEMENT CONCRETE PAVEMENT

CITY OF MOSCOW
ENGINEERING DEPARTMENT

DRAWING NUMBER: 10

NOTE:

1. CITY CODE HAS PRECEDENCE OVER THIS DRAWING. Parking lots shall conform strictly to the Off-Street Parking Requirements of City Code (Title 4, Section 6-5).
2. See also ADA Standards and International Building Code for Design Accessibility.
3. Single ADA accessible vehicle spaces require a five foot (5') access aisle. Van accessible stalls shall have an eight foot (8') wide aisle width. Two (2) ADA accessible spaces may share a common access aisle with a minimum width of eight feet (8'). Spaces to be standard vehicle size.
4. Dimensions shown are minimum; user friendly lots exceed these dimensions.
5. Fire Code requirements relative to traffic aisle width have precedence over this drawing.
6. Sidewalk adjacent to curb shall slope -2.0% or -1% toward curb.

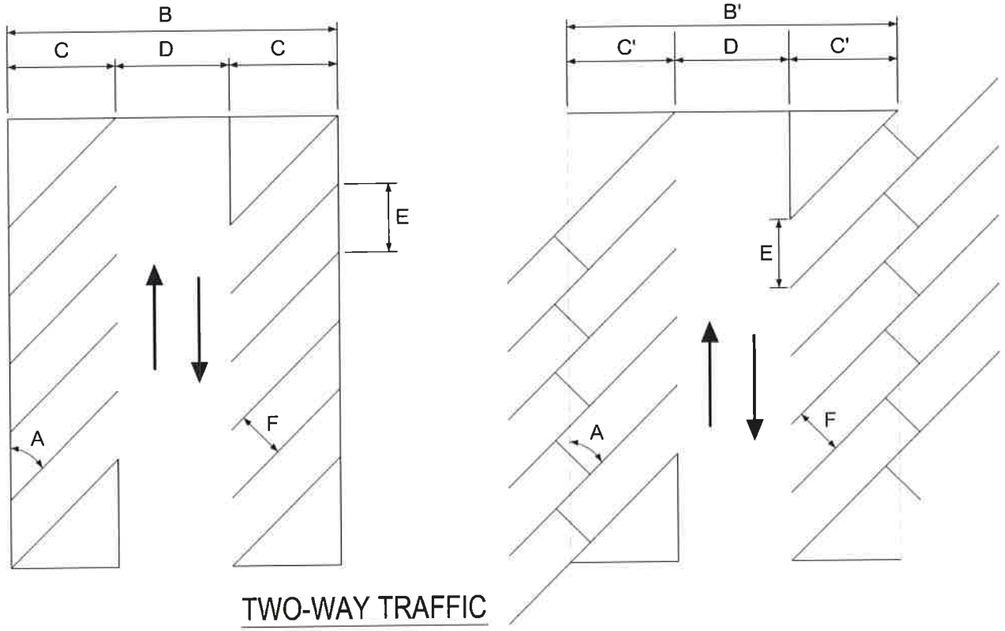

TWO-WAY TRAFFIC

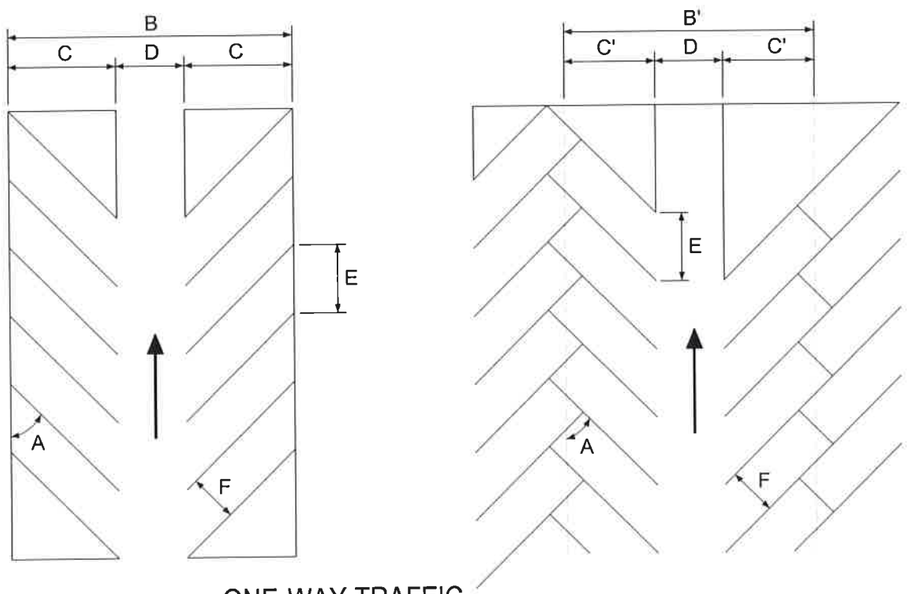

ONE-WAY TRAFFIC

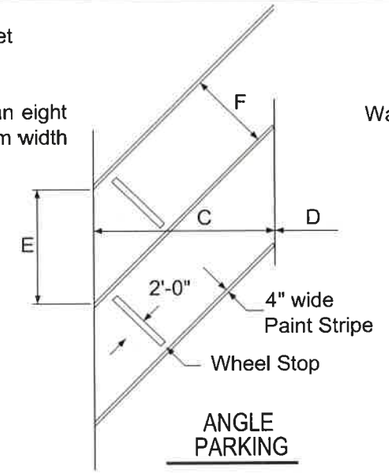

ANGLE PARKING

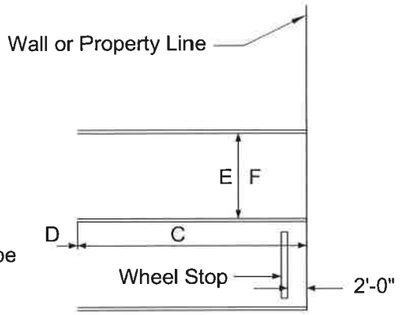

PERPENDICULAR PARKING

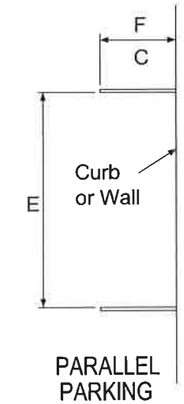

PARALLEL PARKING

Minimum Number of Accessible Parking Spaces
ADA Standards for Accessible Design 4.1.2(5)

Total Parking Spaces In Lot	Total Minimum Accessible Spaces	*Spaces Requiring Van Accessible 8' Access Aisle*
1 to 25	1	*1*
26 to 50	2	*1*
51 to 75	3	*1*
76 to 100	4	*1*
101 to 150	5	*1*
151 to 200	6	*1*
201 to 300	7	*1*
301 to 400	8	*1*
401 to 500	9	*2*
501 to 1000	2% of Total	*1/8 of Total Minimum Accessible Spaces*
1001 and over	20 plus 1 for each 100 over 1000	

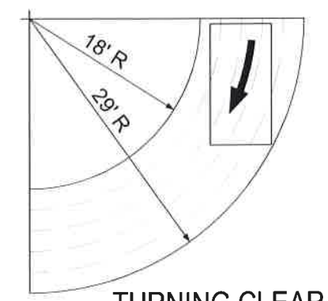

TURNING CLEARANCES

A PARKING ANGLE	B PARKING SECTION WIDTH	C PARKING BANK WIDTH	D TRAFFIC AISLE WIDTH	E CURB LENGTH PER CAR	F CAR STALL WIDTH	B' PARKING SECTION WIDTH	C' PARKING BANK WIDTH
TWO WAY TRAFFIC STANDARD VEHICLES							
0°	36'	8'	20'	23'	8'		
45°	58'	19'	20'	12'	8.5'	51'	15.5'
60°	60'	20'	20'	9.8'	8.5'	55'	17.5'
90°	64'	20'	24'	9'	9'		
TWO WAY TRAFFIC COMPACT VEHICLES							
0°	35'	7.5'	20'	15'	7.5'		
45°	52'	16'	20'	10.6'	7.5'	47'	13.3'
60°	54'	16.8'	20'	8.7'	7.5'	50'	14.9'
90°	50'	15'	20'	7.5'	7.5'		
ONE WAY TRAFFIC STANDARD VEHICLES							
0°	28'	8'	12'	23'	8'		
45°	50'	19'	12'	12'	8.5'	43'	15.5'
60°	55'	20'	15'	9.8'	8.5'	50'	17.5'
ONE WAY TRAFFIC COMPACT VEHICLES							
0°	27'	7.5'	12'	15'	7.5'		
45°	44'	16'	12'	10.6'	7.5'	39'	13.3'
60°	49'	16.8'	15'	8.7'	7.5'	45'	14.9'

REVISIONS

DATE	DESCRIPTION

SIGNED AND DATED

PROFESSIONAL ENGINEER REGISTERED 8832 5-19-14 STATE OF IDAHO KEVIN LILLY

DRAFTED BY: MAS/KWK/CEE

CHECKED BY: K.Lilly

DRAWING SCALE: NTS

DATE: 1-27-2012

PARKING LOT

CITY OF MOSCOW
ENGINEERING DEPARTMENT

DRAWING NUMBER: 11

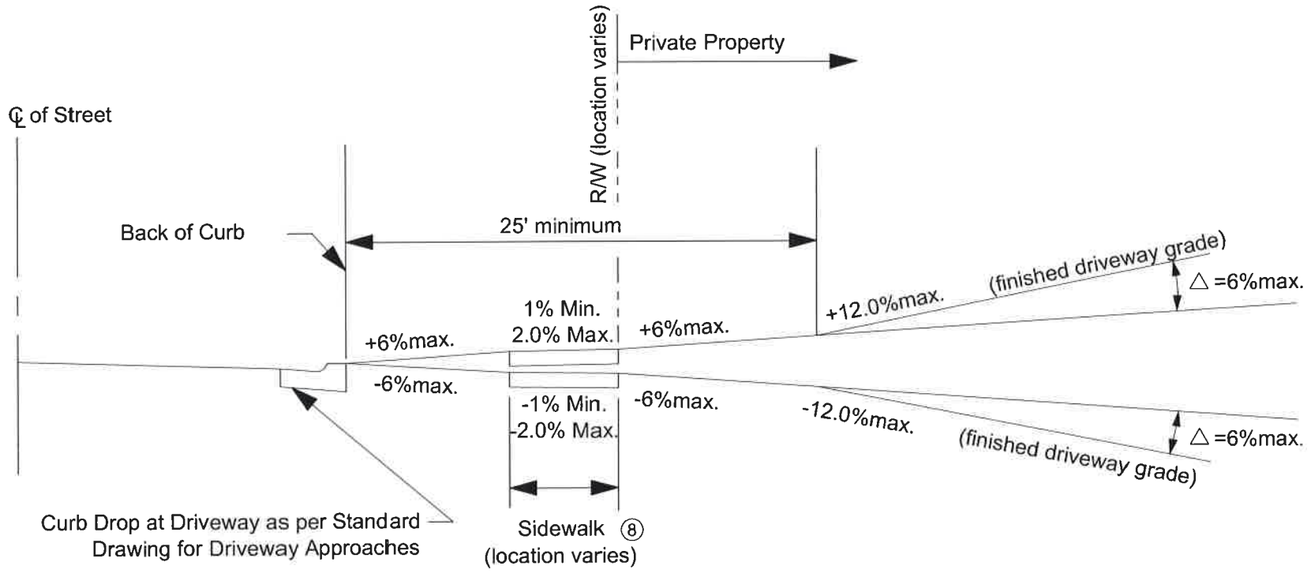

TYPE I DRIVEWAY

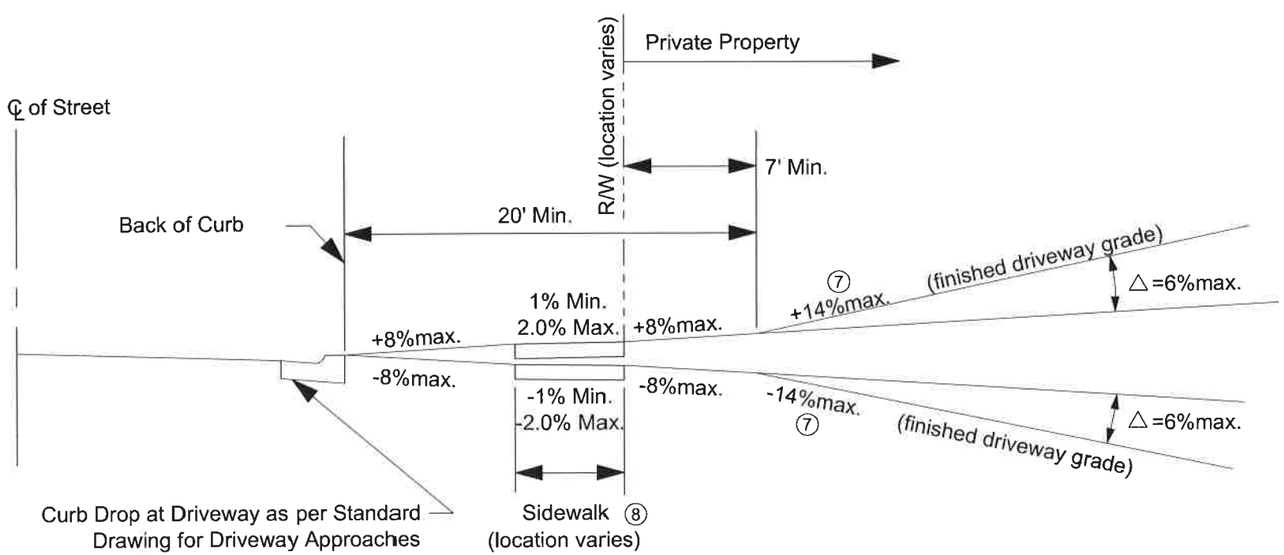

TYPE II DRIVEWAY

NOTES:

1. TYPE I DRIVEWAY applies to all driveways except those for single family dwellings and duplexes.
2. TYPE II DRIVEWAY applies to single family and duplex lots.
3. Driveway grade must also match existing sidewalk elevation. The City Engineer may allow reconstruction of the sidewalk for the purpose of matching a proposed driveway grade. ADA Standards Apply.
4. Maximum cross slope of driveways shall not exceed 5.0%.
5. Maximum slope of parking areas and aisles shall not exceed 5.0% in any direction.
6. Noted grades measured at driveway centerline.
7. Or as approved by the Building Official.
8. Sidewalk adjacent to curb shall slope -2.0% or -1% towards curb.

REVISIONS	
DATE	DESCRIPTION

SIGNED AND DATED

PROFESSIONAL ENGINEER REGISTERED 8832 5-19-14 STATE OF IDAHO KEVIN LILLY

DRAFTED BY: K.Kipp, C.Edwards

CHECKED BY: K.Lilly

DRAWING SCALE: N T S

DATE: 2-27-2014

DRIVEWAY GRADE LIMITATIONS

CITY OF MOSCOW
ENGINEERING DEPARTMENT

DRAWING NUMBER: 12

NOTES:

1. The locations of City water, sanitary sewer and storm sewer mains shown are preferred where possible; curvilinear street alignment and tangent utility runs dictate other locations, as approved by the City Engineer.

2. The 'community' style mailboxes shall be placed in locations approved by both the Postal Service and the City Engineer. The Developer is responsible for the construction of 'community' mailbox concrete support slab, all in accordance with U.S. Postal Service construction requirements. The support slab shall extend to the City sidewalk.

3. Utility poles (wood, metal, or other) shall be located with 1.5' minimum clearance from back of curb to face of pole or 1.0' minimum from back of sidewalk to face of pole. Sign posts shall be located 1.5' minimum from back of curb; their location shall also conform to MUTCD requirements.

4. Franchise utilities, including pedestals shall be located within street right-of-way or public utility easement and as shown on the Standard Drawing for Franchise Utility Details.

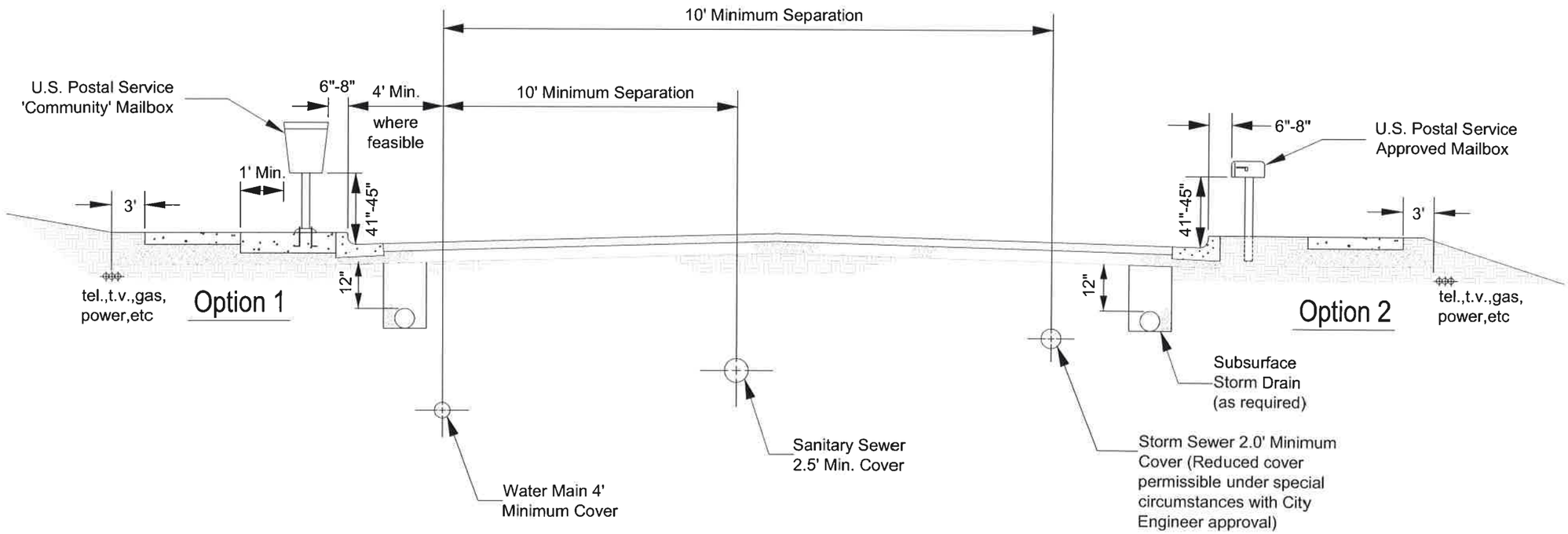

TYPICAL SECTION

REVISIONS	
DATE	DESCRIPTION

SIGNED AND DATED

PROFESSIONAL ENGINEER REGISTERED 8832 5-19-14 STATE OF IDAHO KEVIN LILLY

DRAFTED BY: K.Kipp / M.Sass
CHECKED BY: K.Lilly
DRAWING SCALE: NTS
DATE: 3-31-2014

UTILITY & MAIL BOX LOCATIONS

CITY OF MOSCOW
ENGINEERING DEPARTMENT

DRAWING NUMBER: 13

ROAD CROSSING FOR SECONDARY PEDESTAL (Typical)

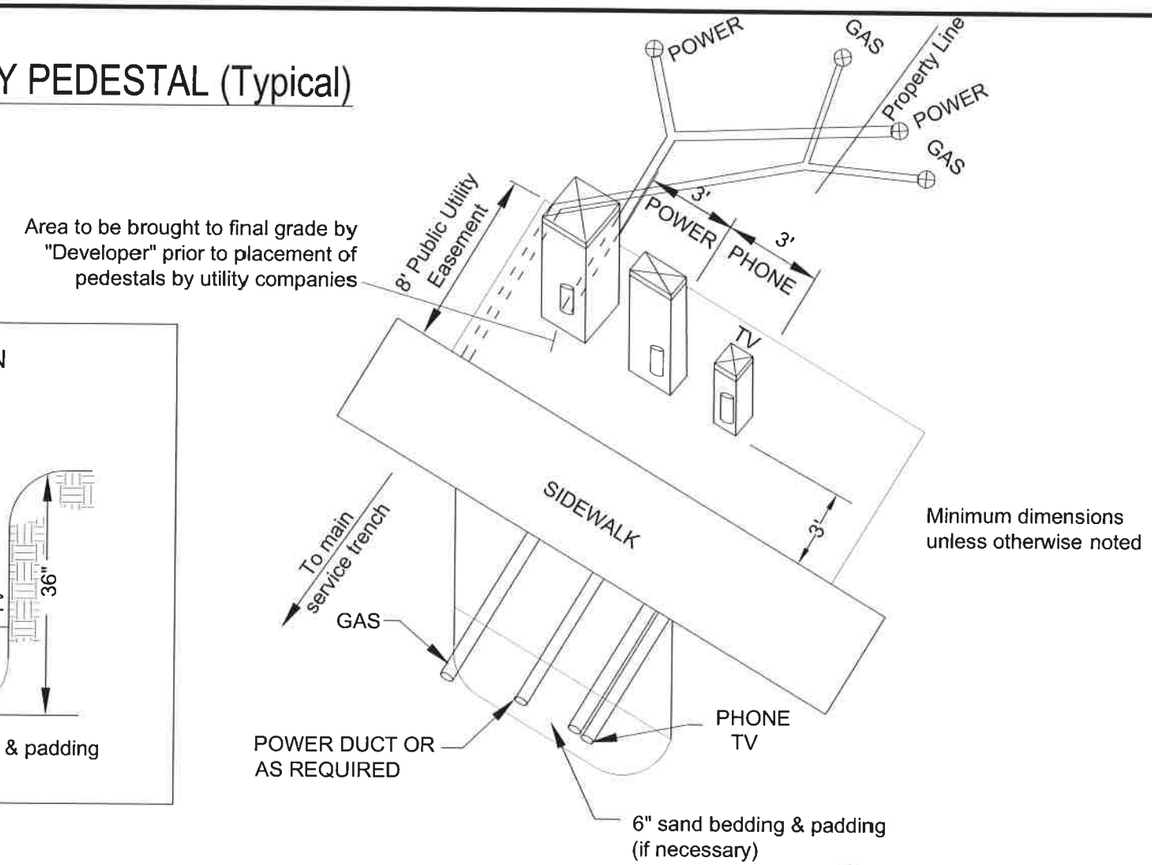

Area to be brought to final grade by "Developer" prior to placement of pedestals by utility companies

Minimum dimensions unless otherwise noted

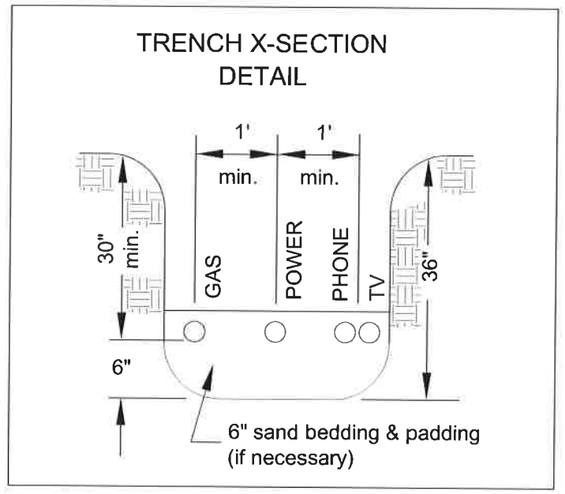

NOTES:

1. Verify conduit sizes with utilities prior to installation.
2. Bundle conduits for each utility at pedestal locations.
3. Dimensions shown are minimum unless otherwise noted.
4. Unless otherwise directed, the Gas, Power, Telephone, and T.V. Cable will be installed on the North and East sides of the street.
5. Furnish and install pull strings in all conduits.

MAIN LINE (Typical)

Area to be brought to final grade by "Developer" prior to placement of pedestals by utility companies

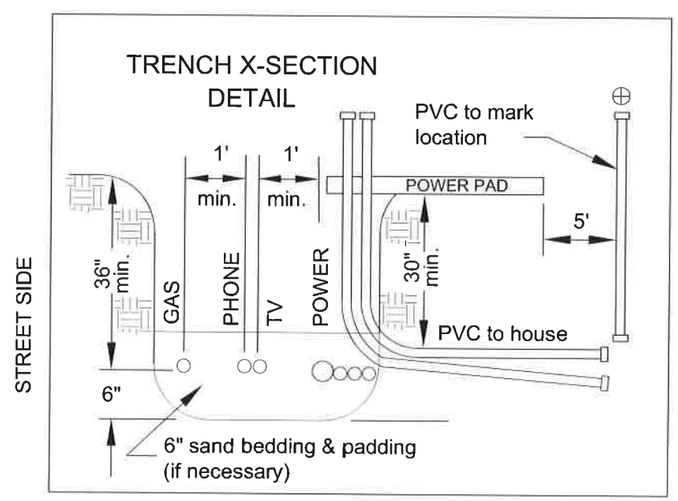

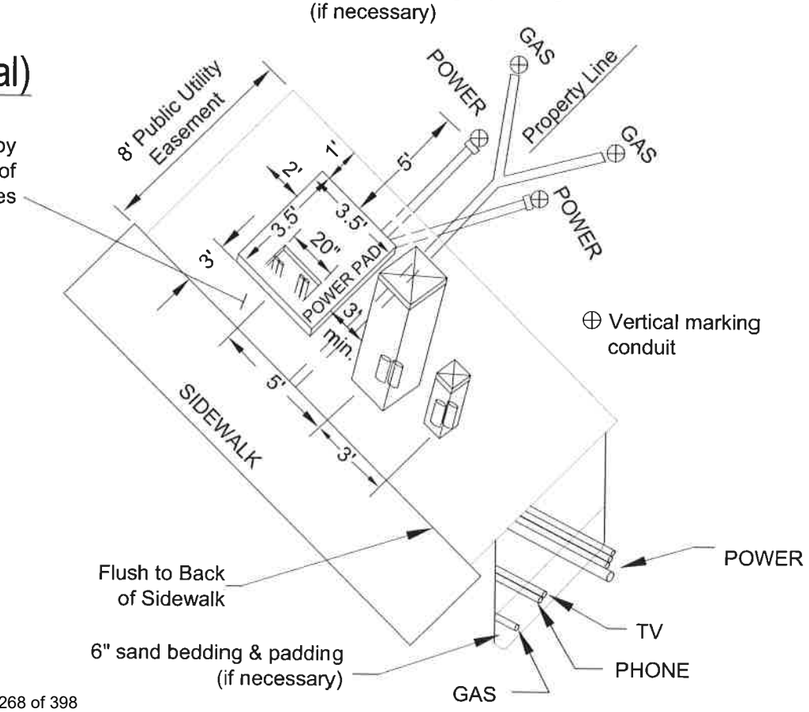

⊕ Vertical marking conduit

REVISIONS	
DATE	DESCRIPTION

DETAIL PROVIDED BY THE FRANCHISE UTILITY COMPANIES

DRAFTED BY: K.Kipp
CHECKED BY: K.Lilly
DRAWING SCALE: NTS
DATE: 1-30-2012

FRANCHISE UTILITY DETAILS

CITY OF MOSCOW
ENGINEERING DEPARTMENT

DRAWING NUMBER: 14

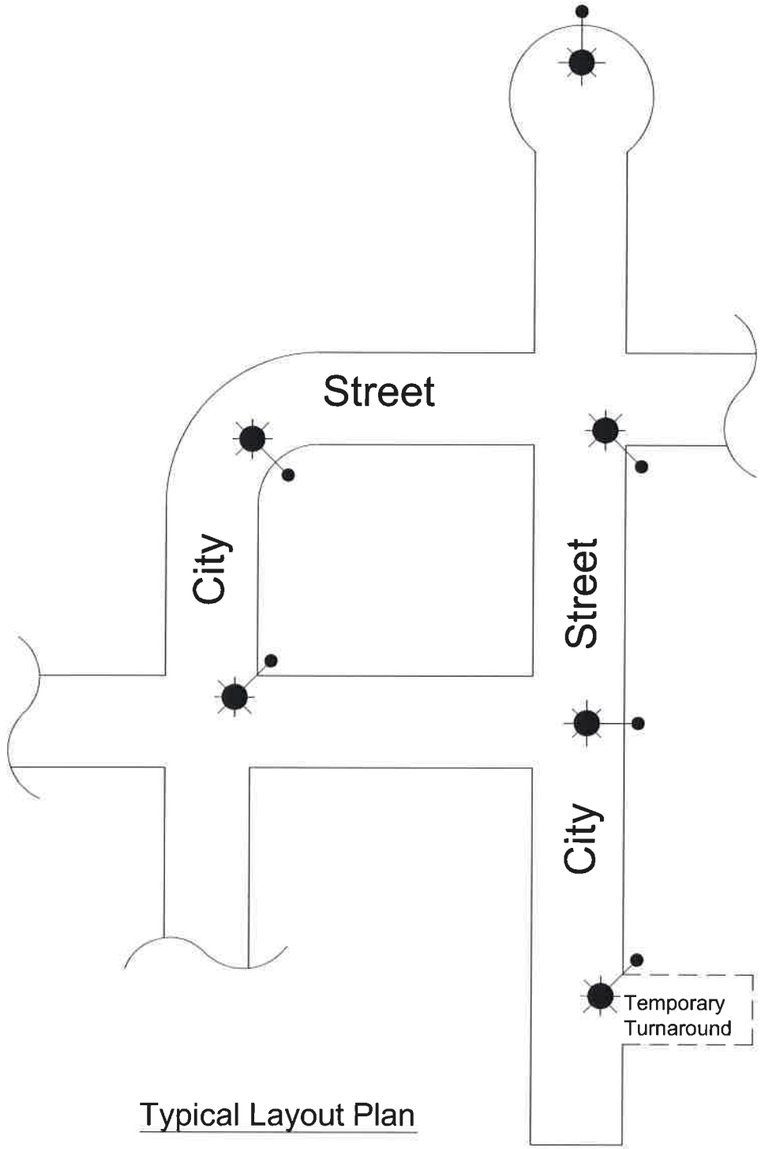

Typical Layout Plan

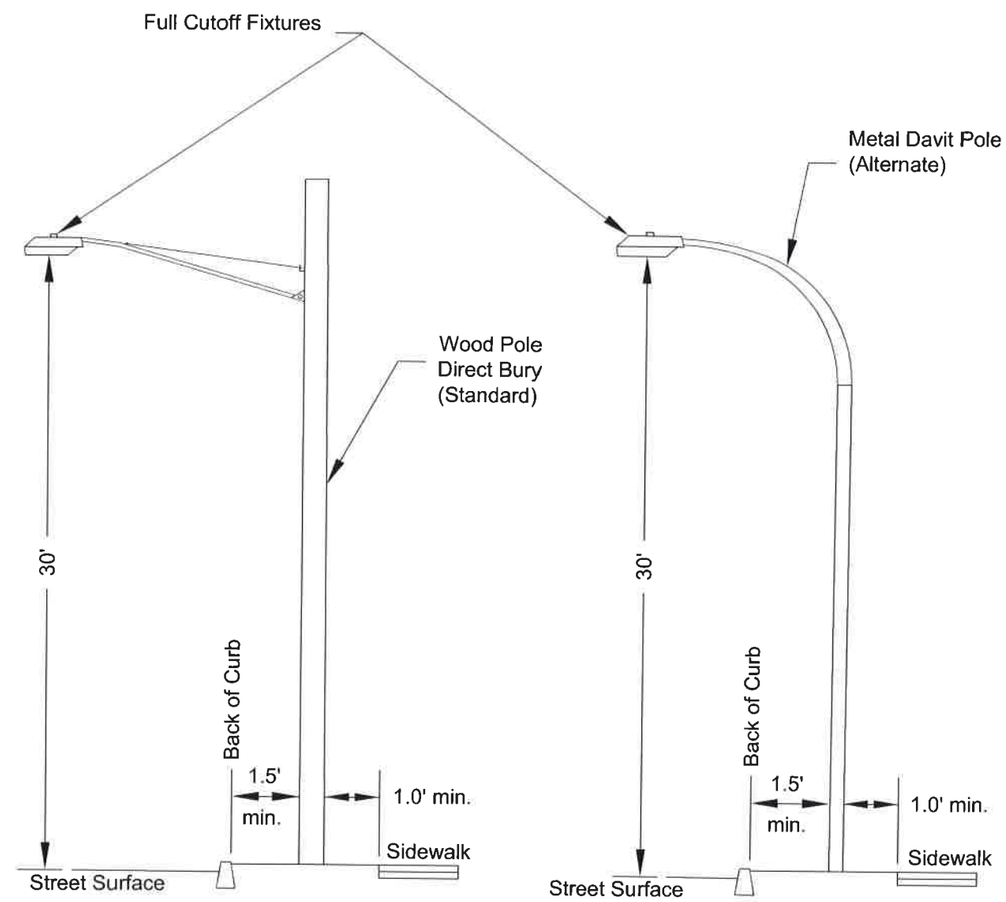

Installation Details

NOTES:

1. Street lights (pole, fixture, and conductors) to be furnished, installed, owned, and maintained by AVISTA. 'Cobra head' style light fixtures are required unless otherwise approve by the City Engineer.
2. Wood street light poles will be furnished and installed as the standard - metal davit poles are allowed but the additional/incremental costs of furnishing metal davit poles shall be paid by the Developer directly to AVISTA.
3. Developer shall furnish and install buried conduit for street lights - all as required by AVISTA - at Developer expense.
4. All street lights shall be full cut-off.
5. Street lights in residential developments will generally be installed at all four-way intersections, three-way (tee) intersections, ninety degree corners, permanent cul-de-sacs, and temporary turnarounds - one at each of these locations. Additional street lights at other locations may be as allowed or required by the City Engineer.
6. Street lights shall comply with Moscow City Code Title 4, Section 6-15.

REVISIONS	
DATE	DESCRIPTION

SIGNED AND DATED

PROFESSIONAL ENGINEER REGISTERED 8832 STATE OF IDAHO KEVIN LILLY 5-19-14

DRAFTED BY: C.Edwards
CHECKED BY: K.Lilly
DRAWING SCALE: NTS
DATE: 3-3-2014

RESIDENTIAL STREET LIGHTING

CITY OF MOSCOW
ENGINEERING DEPARTMENT

DRAWING NUMBER: 15

NOTES:

1. DEAD END signs shall be placed as near as possible to the beginning of all streets that terminate (either temporary or permanent) in a dead end or cul-de-sac. END OF ROAD MARKERS (two of them) shall be placed at the end of all terminated streets EXCEPT permanent cul-de-sacs.
2. Reflectors and reflective sheeting shall meet the requirements set forth in the most current editions of the Manual for Uniform Traffic Control Devices and Idaho Transportation Department's Standard Specifications for Highway Construction.
3. U-channel galvanized steel posts weighing 3.0 lbs./ft. and conforming to ASTM A499, or a 4"x4" treated wood post, shall be a minimum requirement. No splicing or bolting of multiple u-channels will be allowed.. All posts shall meet the Engineer's approval.
4. Theft resisting "Tufnut" brand hardware shall be used for sign installation.
5. Signs shall be installed vertically plumb.

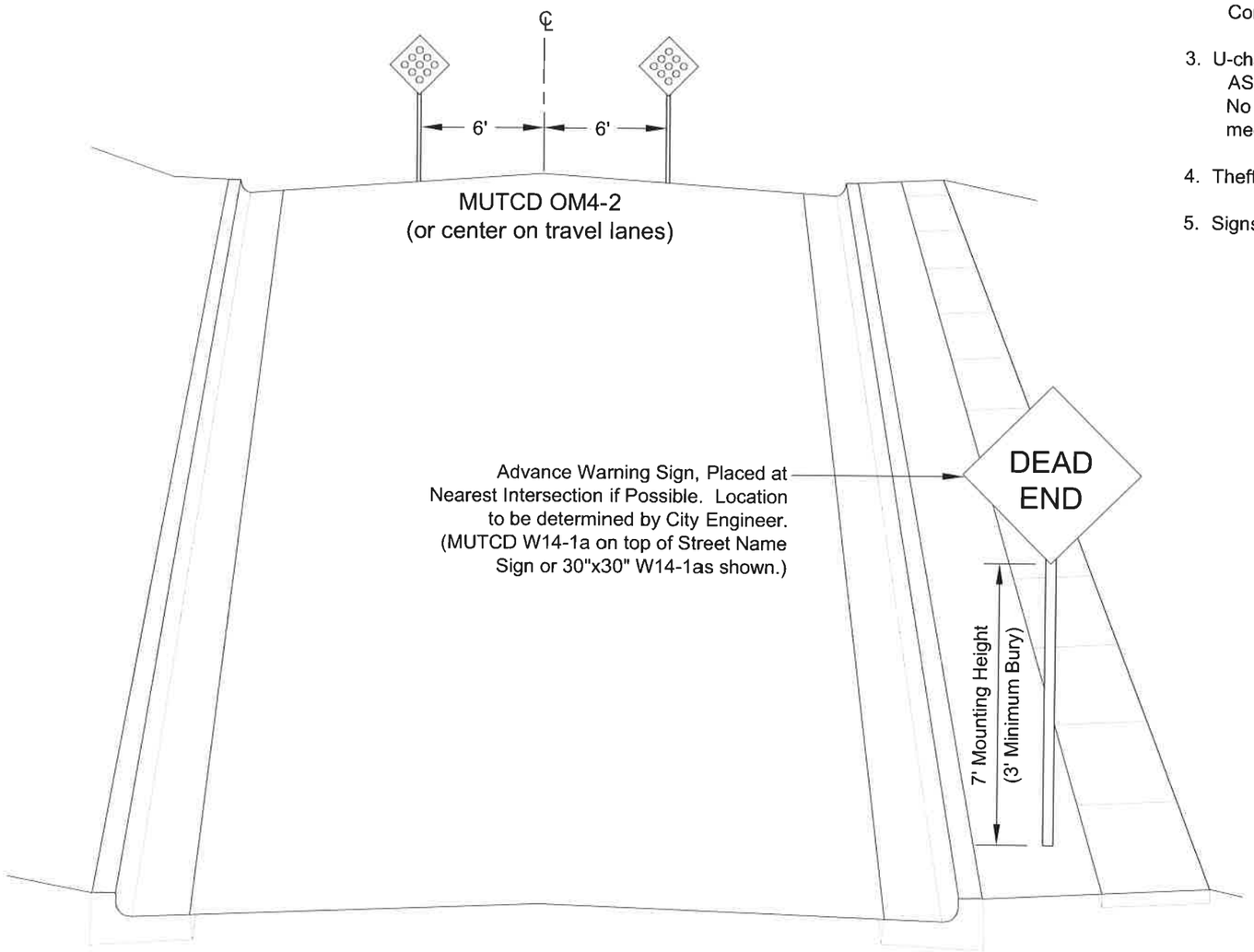

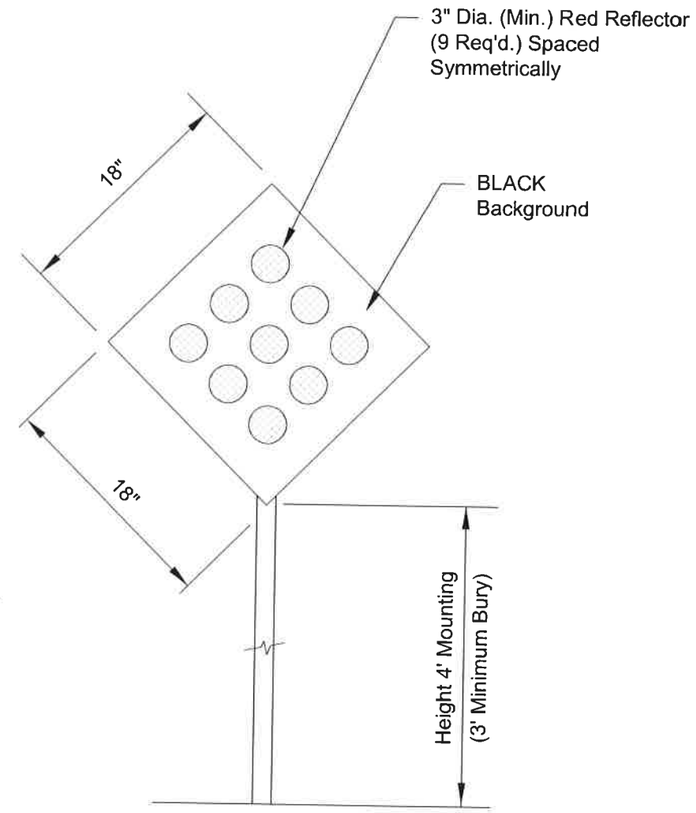

REVISIONS	
DATE	DESCRIPTION

SIGNED AND DATED

PROFESSIONAL ENGINEER REGISTERED 8832 5-19-14 STATE OF IDAHO KEVIN LILLY

DRAFTED BY: RKC/KWK	CHECKED BY: K.Lilly
DRAWING SCALE: NTS	DATE: 3-3-2014

END OF ROAD MARKERS & DEAD END SIGNS

CITY OF MOSCOW
ENGINEERING DEPARTMENT

DRAWING NUMBER: 16

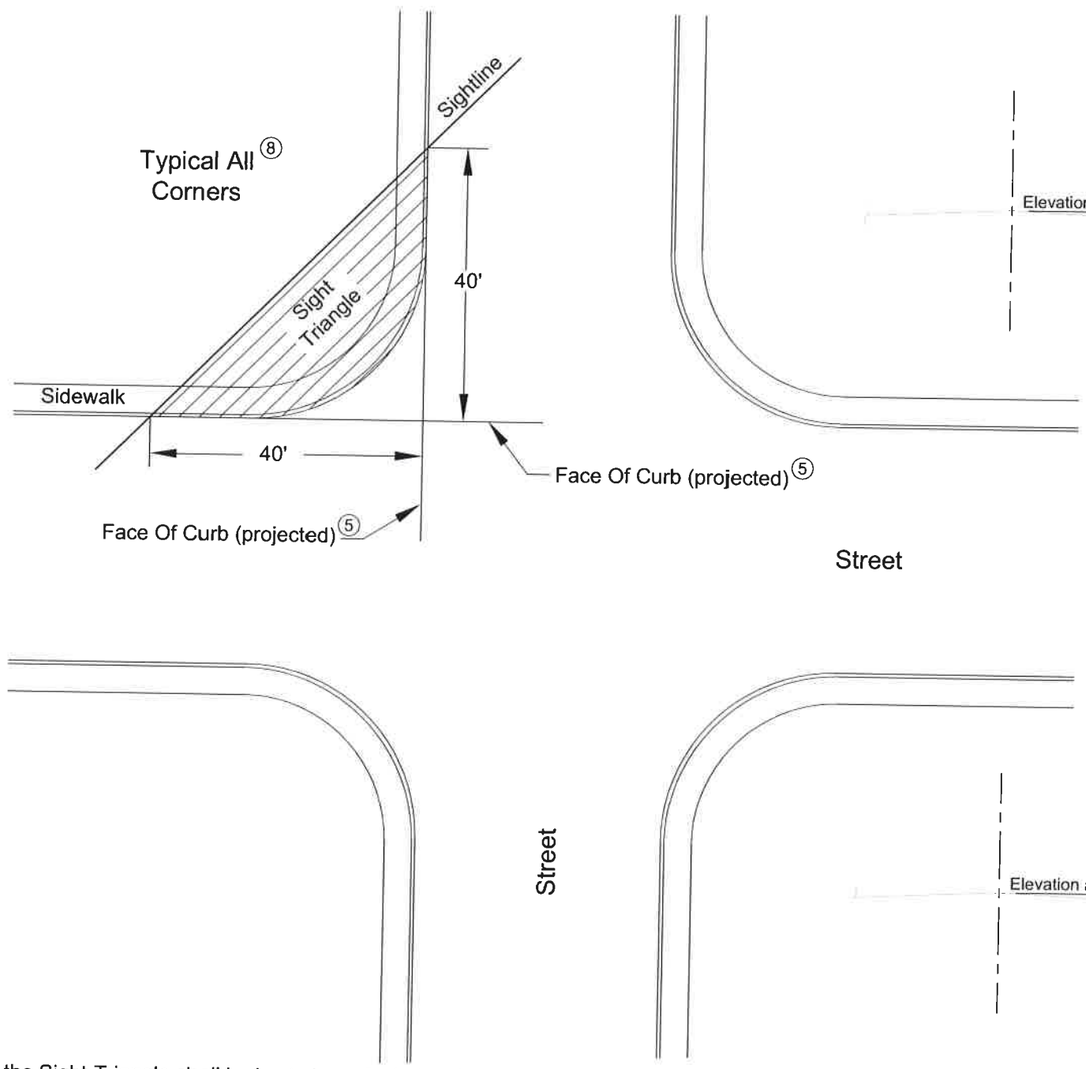

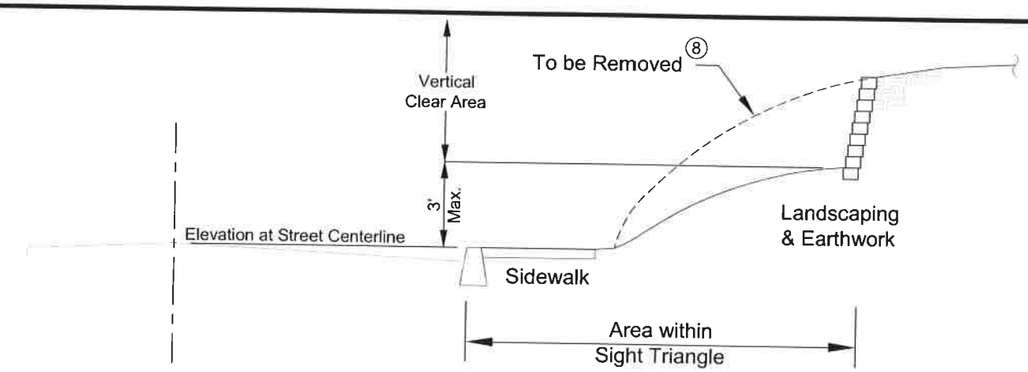

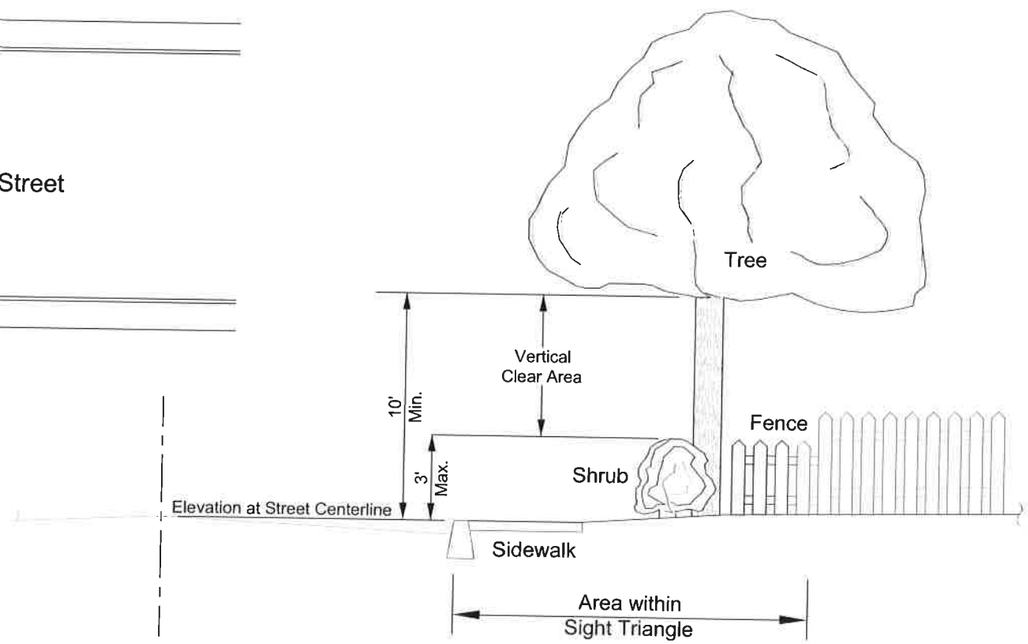

Notes:

1. Area within the Sight Triangle shall be kept clear of obstructions to provide the motorist with adequate field of vision at an intersection.
2. Within the Sight Triangle all existing trees shall be kept trimmed such that ten feet (10') of clearance exists between any branches and the ground. Any tree branches overhanging the sidewalk shall be kept trimmed such that ten feet (10') of clearance exists between any branches and the sidewalk.
3. Within the Sight Triangle, all existing shrubs shall be kept trimmed to a maximum height of three feet (3').
4. Sight obstruction Vertical Clear Area measurements shall be in reference to the existing centerline street elevation within the Sight Triangle.
5. If curb does not exist, then the Sight Triangle will be measured by extending the edges of street pavement; on unpaved streets, the Sight Triangle will be measured by extending the edge of the traveled way as determined by the City Engineer.
6. This City Standard enforces Idaho Code 49-221.
7. All dimensional criteria (as shown) must be satisfied.
8. Unusual topography may require more stringent requirements at some locations to obtain adequate Sight Triangles as determined by City Engineer.

REVISIONS	
DATE	DESCRIPTION

SIGNED AND DATED

PROFESSIONAL ENGINEER REGISTERED 8832 STATE OF IDAHO KEVIN LILLY 5-19-14

DRAFTED BY: CEE/KWK	CHECKED BY: K.Lilly
DRAWING SCALE: NTS	DATE: 3-3-2014

INTERSECTION SIGHT TRIANGLE

CITY OF MOSCOW
ENGINEERING DEPARTMENT

DRAWING NUMBER: 17

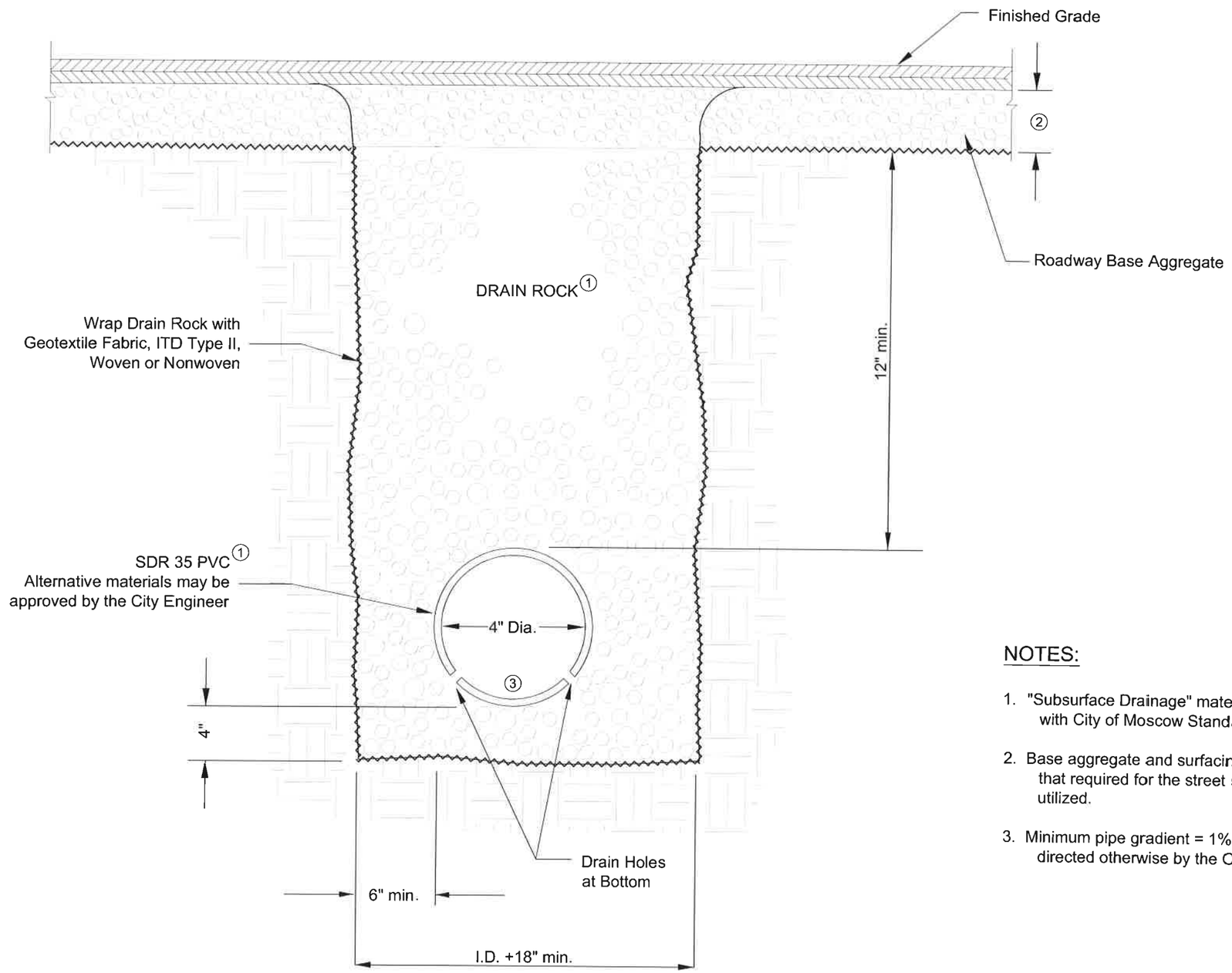

TYPICAL SECTION

NOTES:

1. "Subsurface Drainage" materials and installation shall comply with City of Moscow Standard Construction Specifications.
2. Base aggregate and surfacing depth and type to be the same as that required for the street section where this trench backfill is utilized.
3. Minimum pipe gradient = 1% unless specifically allowed or directed otherwise by the City Engineer.

REVISIONS	
DATE	DESCRIPTION

SIGNED AND DATED

PROFESSIONAL ENGINEER REGISTERED 8832 5-19-14 STATE OF IDAHO KEVIN LILLY

DRAFTED BY: KWK/CEE
CHECKED BY: K.Lilly
DRAWING SCALE: NTS
DATE: 3-3-2014

SUBSURFACE DRAINAGE

CITY OF MOSCOW
ENGINEERING DEPARTMENT

DRAWING NUMBER: 18

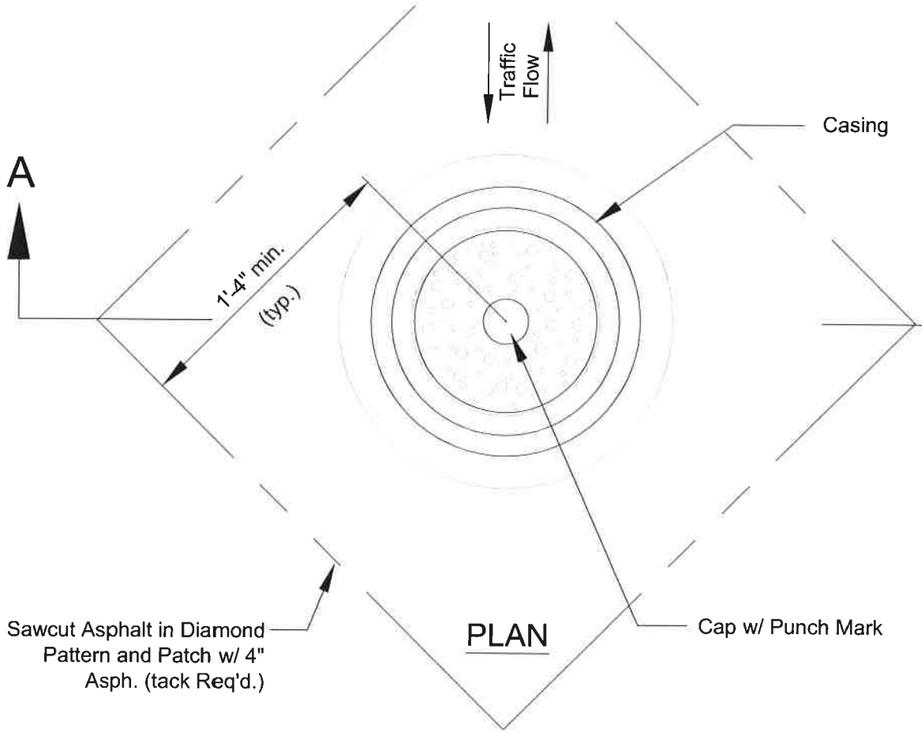

PLAN

PLAN

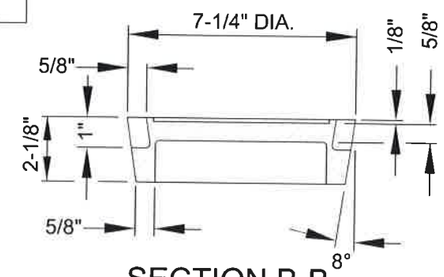

SECTION B-B

COVER DETAIL

Notes:

1. Survey caps must be securely attached to rebar or pipe.
2. Survey monuments shown on the SURVEY MONUMENT Standard Drawing may be used as street monuments.
3. Survey caps will be aluminum or brass and a punch mark placed at the exact location. Plastic caps not allowed.
4. Cover and casing shall be machined to a true bearing all around.
5. The monument casing shall be bedded in aggregate.
6. The casing and cover shall be gray iron castings suitable for heavy traffic loading; minimum unit weight = 46 lbs.
7. The installation shall result in a 'bump-free' street surface, as approved by the city engineer.
8. The cover shall include the wording as shown.
9. All materials shall be manufactured in the U.S.A.

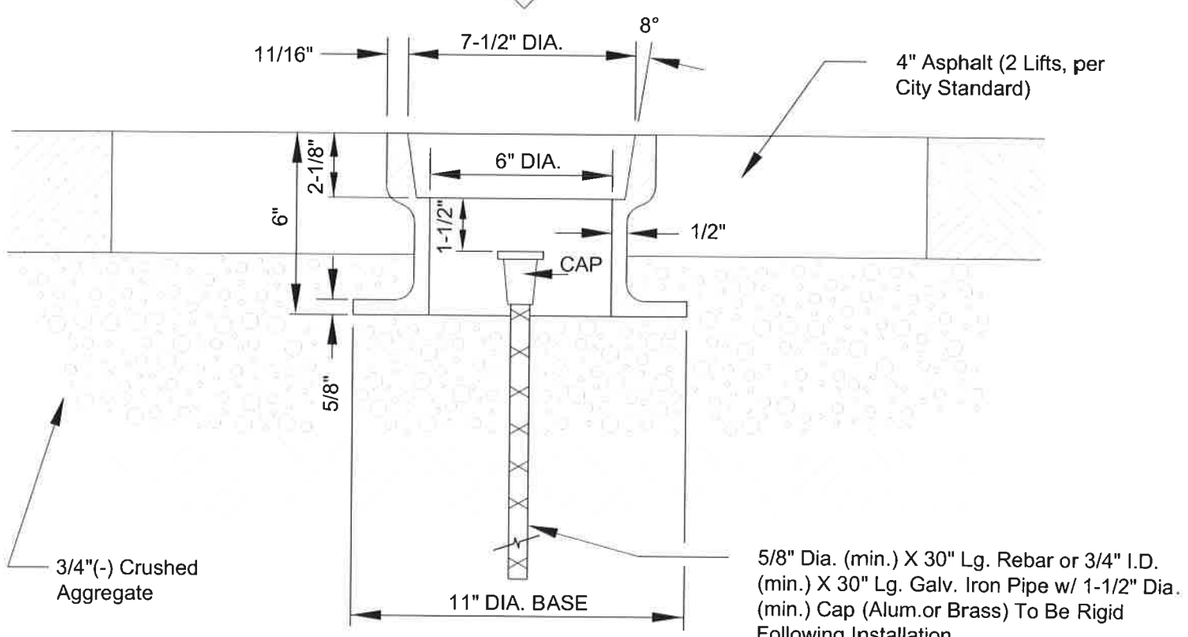

SECTION A-A

MONUMENT AND CASING DETAIL

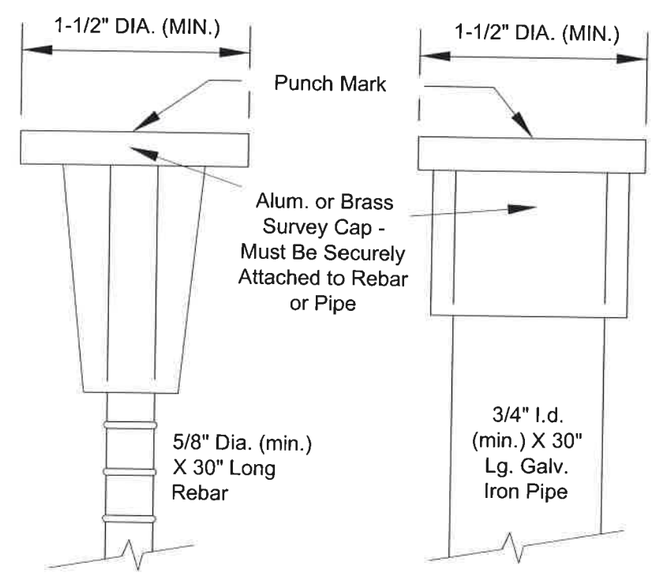

CAP DETAIL

REVISIONS	
DATE	DESCRIPTION

SIGNED AND DATED

PROFESSIONAL ENGINEER REGISTERED 8832 5-19-14 STATE OF IDAHO KEVIN LILLY

DRAFTED BY: RKC/KWK

CHECKED BY: K.Lilly

DRAWING SCALE: NTS

DATE: 1-30-2012

STREET MONUMENT

CITY OF MOSCOW
ENGINEERING DEPARTMENT

DRAWING NUMBER: 19

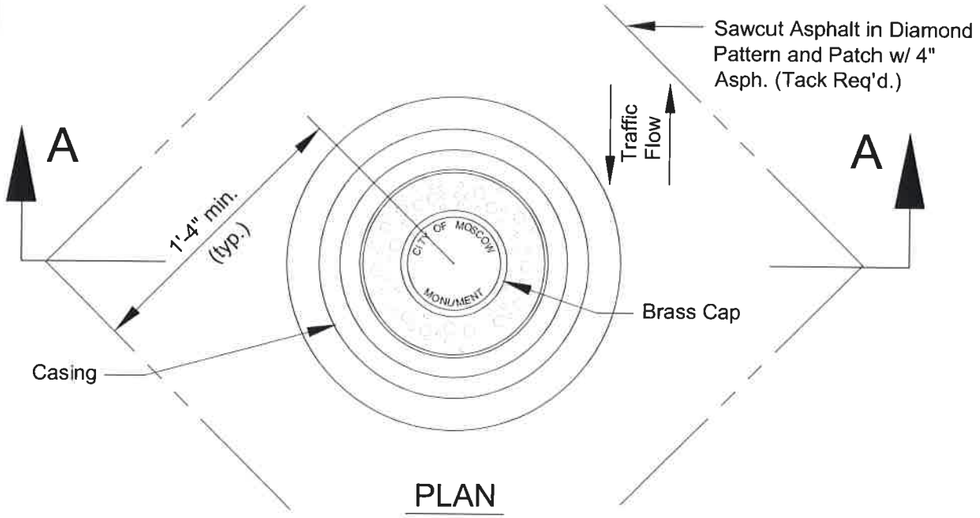

PLAN

PLAN

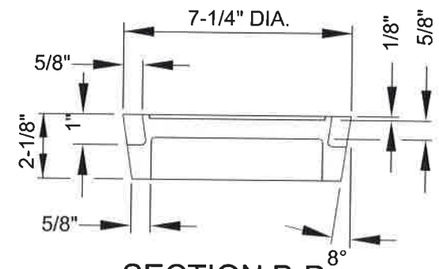

SECTION B-B

COVER DETAIL

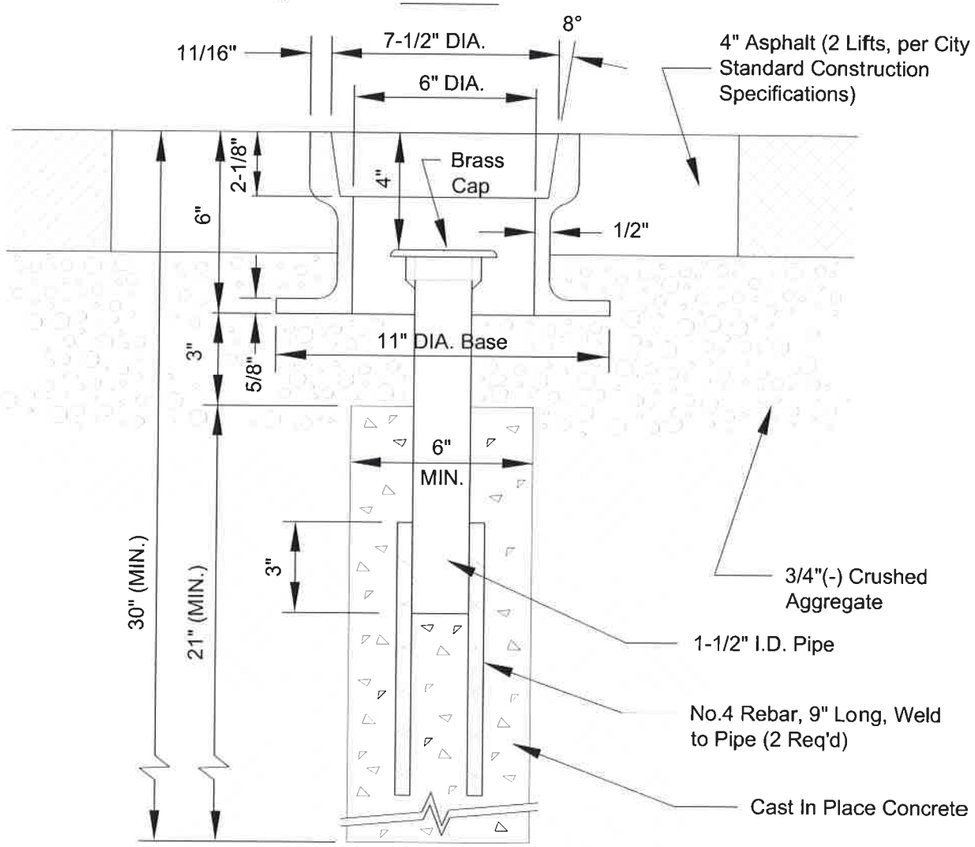

SECTION A-A

MONUMENT AND CASING DETAIL

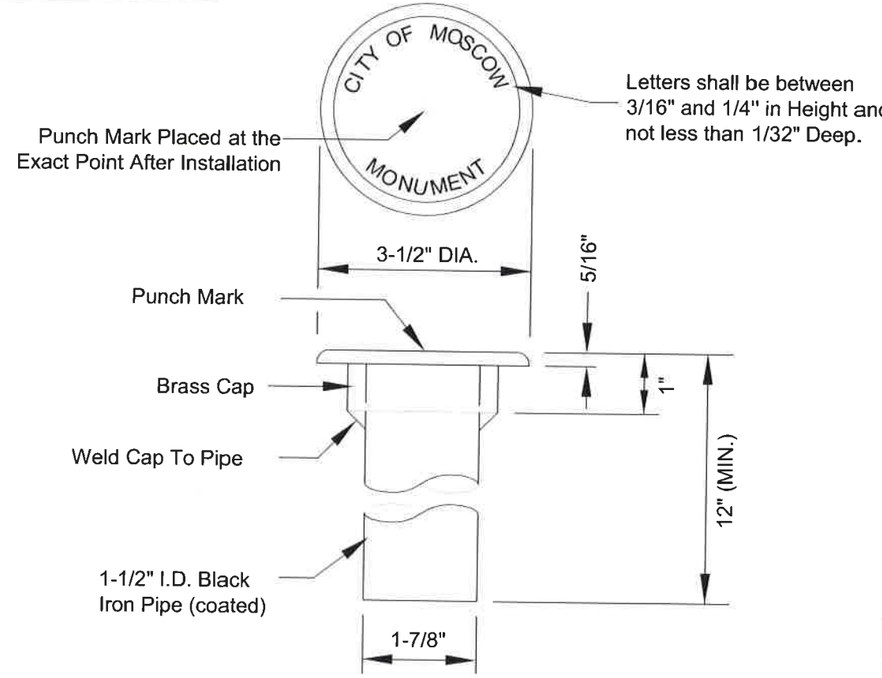

BRASS CAP AND PIPE DETAIL

Notes:

1. Cover and casing shall be machined to a true bearing all around.
2. The brass cap shall conform to the requirements of the most current edition of the Idaho Transportation Department's standard specification for highway construction.
3. The casing and cover shall be gray iron castings suitable for heavy traffic loading; minimum unit weight = 46 lbs.
4. All material except the brass cap shall be covered with a protective coating after welding. The coating shall be of a bituminous type or approved equal.
5. The installation shall result in a relatively 'bump-free' street surface, as approved by the city engineer.
6. The cover shall include the wording as shown.
7. All materials shall be manufactured in the U.SA.

REVISIONS	
DATE	DESCRIPTION

SIGNED AND DATED

PROFESSIONAL ENGINEER REGISTERED 8832 5-19-14 STATE OF IDAHO KEVIN LILLY

DRAFTED BY: RKC/KWK	CHECKED BY: K.Lilly	DRAWING SCALE: NTS	DATE: 1-31-2012

SURVEY MONUMENT

CITY OF MOSCOW
ENGINEERING DEPARTMENT

DRAWING NUMBER: 20

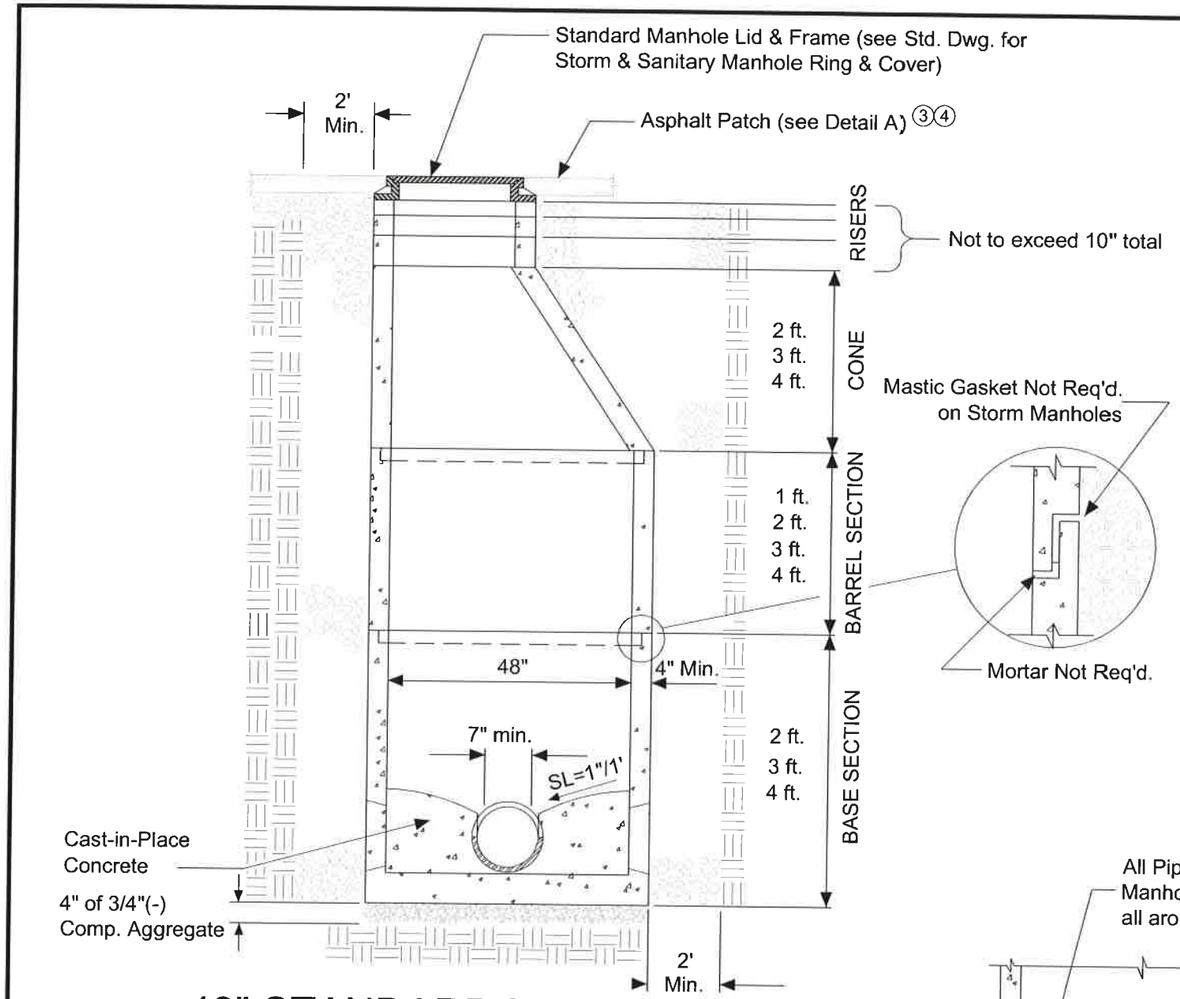

48" STANDARD MANHOLE w/ PRECAST BASE

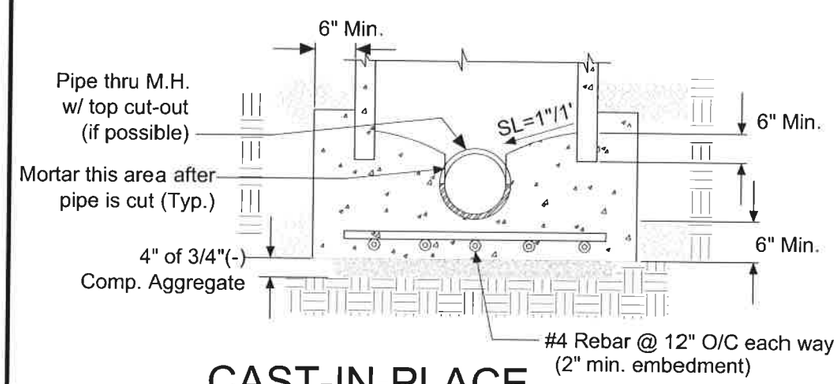

CAST-IN-PLACE ALTERNATE BASE

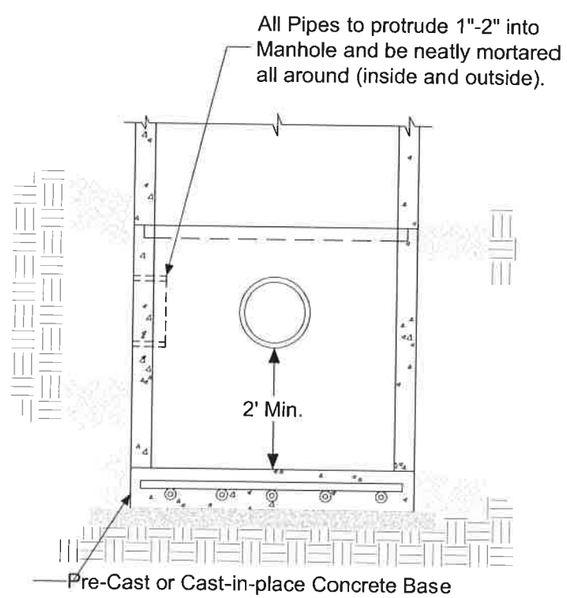

MANHOLE w/ CATCH BASE

NOTES:

1. Precast bases are preferred.
2. Steps shall not be installed in the manholes.
3. Manholes located in paved areas shall have asphaltic hot mix patch four inches (4") thick with top course mix restoring surface to exact line and grade of street. Manhole lids in new pavement shall be raised and adjusted to finished grade after completion of street paving.
4. Manholes located in unpaved streets or alleys shall have their lids adjusted to two inches (2") below gravel surface.
5. All cast-in-place concrete shall be troweled very smooth.
6. All joints between precast manhole/sections shall be very smooth.
7. All flow across manholes shall be on-tenth of a foot (0.1') fall, unless the flow changes direction more than 45°, then the fall shall be two-tenths of a foot (0.2') or greater.
8. Channels shall be as per Standard Drawing for Manhole Base Details.
9. Lids shall be set a quarter inch ($\frac{1}{4}$") below the existing paved street grade.
10. Flat slab top allowed on shallow manholes.
11. Contractors shall comply with the most current OSHA requirements for excavation.
12. WSDOT Catch Basin Type 2 may be required at certain locations by the City Engineer in place of this manhole standard.

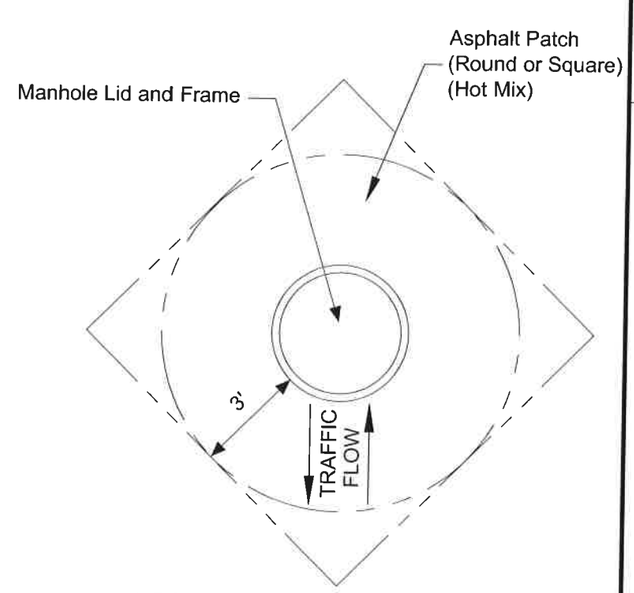

A ASPHALT PATCH DETAIL

REVISIONS	
DATE	DESCRIPTION

SIGNED AND DATED

PROFESSIONAL ENGINEER REGISTERED 8832 5-19-14 STATE OF IDAHO KEVIN LILLY

DRAFTED BY: CEE/KWK	CHECKED BY: K.Lilly
DRAWING SCALE: NTS	DATE: 3-4-2014

STORM SEWER MANHOLE

CITY OF MOSCOW
ENGINEERING DEPARTMENT

DRAWING NUMBER: 21

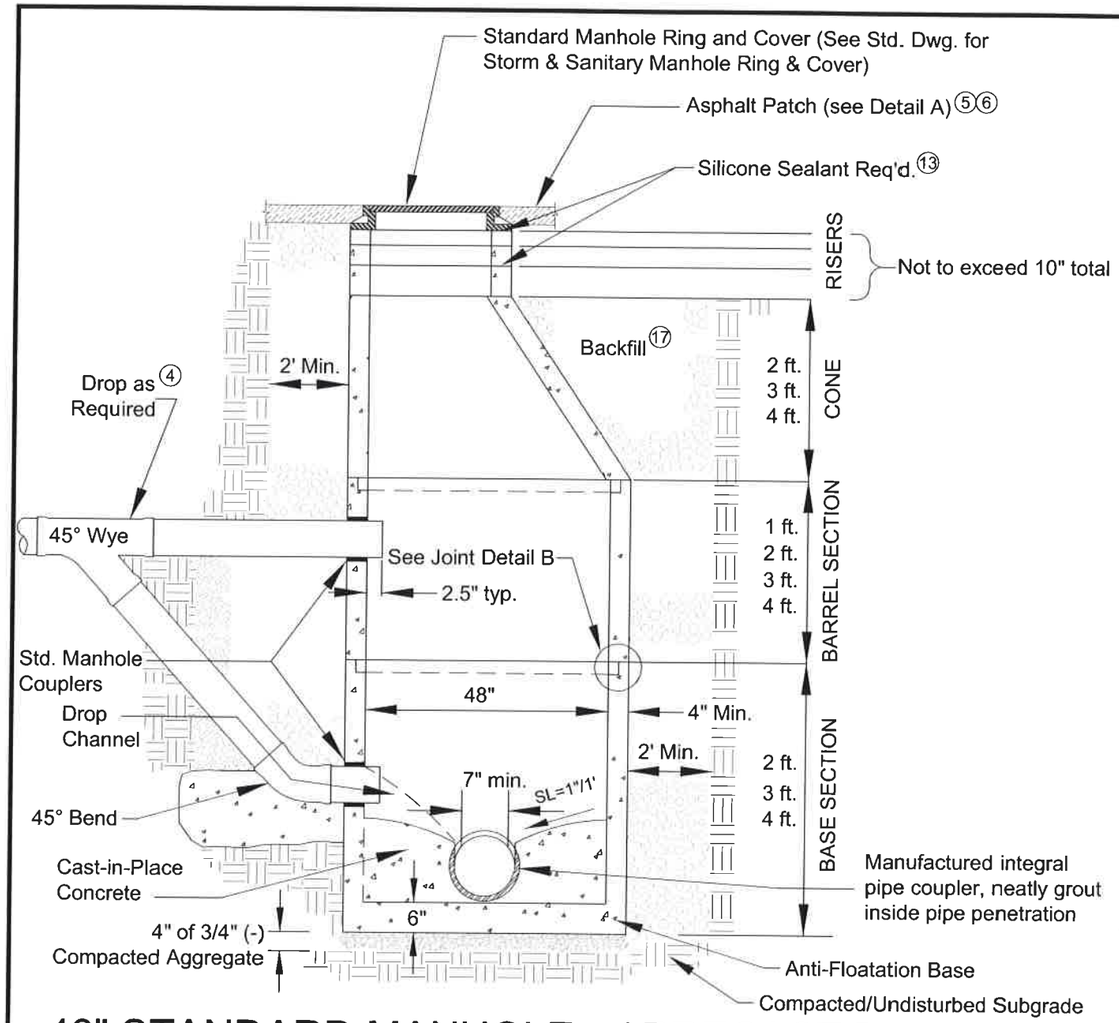

48" STANDARD MANHOLE w/ PRECAST BASE

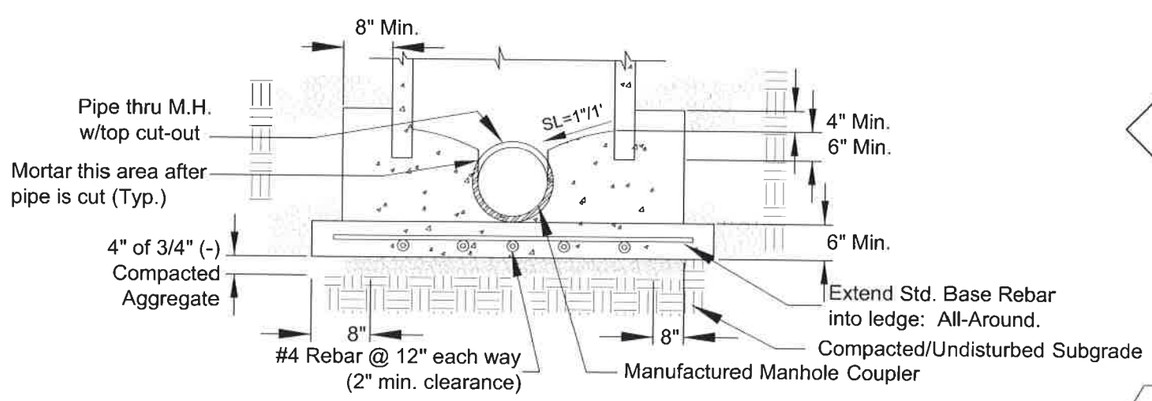

CAST-IN-PLACE ALTERNATE BASE

NOTES:

1. Precast bases with integral pipe couplers are preferred.
2. Manholes shall be constructed watertight and tested per Standard Construction Specifications.
3. Steps shall not be installed in the manholes.
4. Drop configuration is used when the entrance pipe exceeds two feet (2') above the the top of the exit pipe and only with permission of the City Engineer. Drop pipe penetrations shall be neatly mortared. Drop configuration not allowed in new manhole installations.
5. Manholes located in paved areas shall have asphaltic patch four inches (4") thick placed in two lifts to exact line and grade of street. Manhole ring shall be 1/4" below finished patch.
6. Manholes located in unpaved streets or alleys shall have lid adjusted two inches (2") below gravel surface.
7. All cast-in-place conc. shall be troweled smooth.
8. All joints between precast manhole/sections shall be sealed with mastic gaskets and finished with mortar.
9. All flow across manholes shall be one-tenth of a foot (0.1'), unless the flow changes direction more than 45°, then the fall shall be two-tenths of a foot (0.2') or greater.
10. Manufactured watertight manhole couplings required at all pipe penetrations.
11. Channels shall be per Manhole Base Details Standard Drawing.
12. Shallow manholes may be constructed with flat-top precast lids,as approved by the City Engineer.
13. Seal between riser and cone, riser and riser, and riser and frame with two parallel 3/8" diameter beads of silicone sealant.
14. Where new manholes are constructed on existing mains, or where existing manholes are modified, all pipe penetrations shall also be sealed on the exterior by the careful and ample application(s) of mon-shrink grout. Groutable manufactured collars shall be used on new pipes where they enter existing manholes.
15. Manufacturer's standard O-ring joint also acceptable alternate to the standard mastic gasket and mortar joints as shown.
16. Contractor shall comply with the most current OSHA requirements for excavations.
17. Backfill around manholes shall be Class 'D' for all roadways and alleys; Class 'A' for all other locations unless specifically allowed or directed otherwise by the City Engineer.

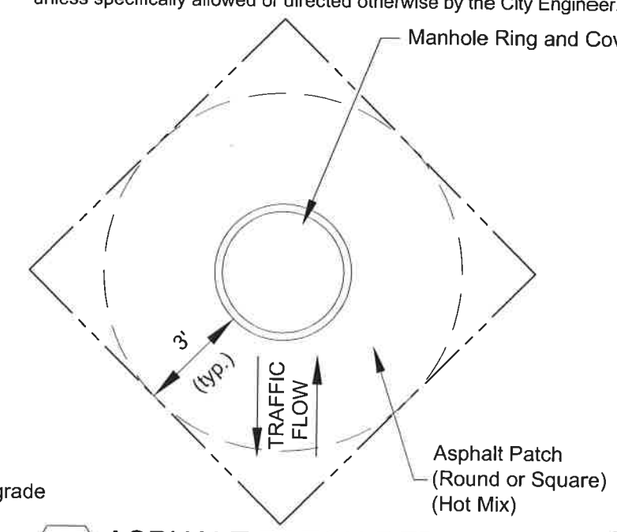

A ASPHALT PATCH DETAIL

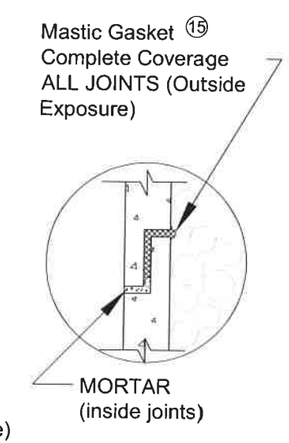

B JOINT DETAIL

REVISIONS	
DATE	DESCRIPTION

SIGNED AND DATED

PROFESSIONAL ENGINEER REGISTERED 8832 5-19-14 STATE OF IDAHO KEVIN LILLY

DRAFTED BY: CEE/KWK
CHECKED BY: K.Lilly
DRAWING SCALE: NTS
DATE: 3-4-2014

SANITARY SEWER MANHOLE

CITY OF MOSCOW
ENGINEERING DEPARTMENT

DRAWING NUMBER: 22

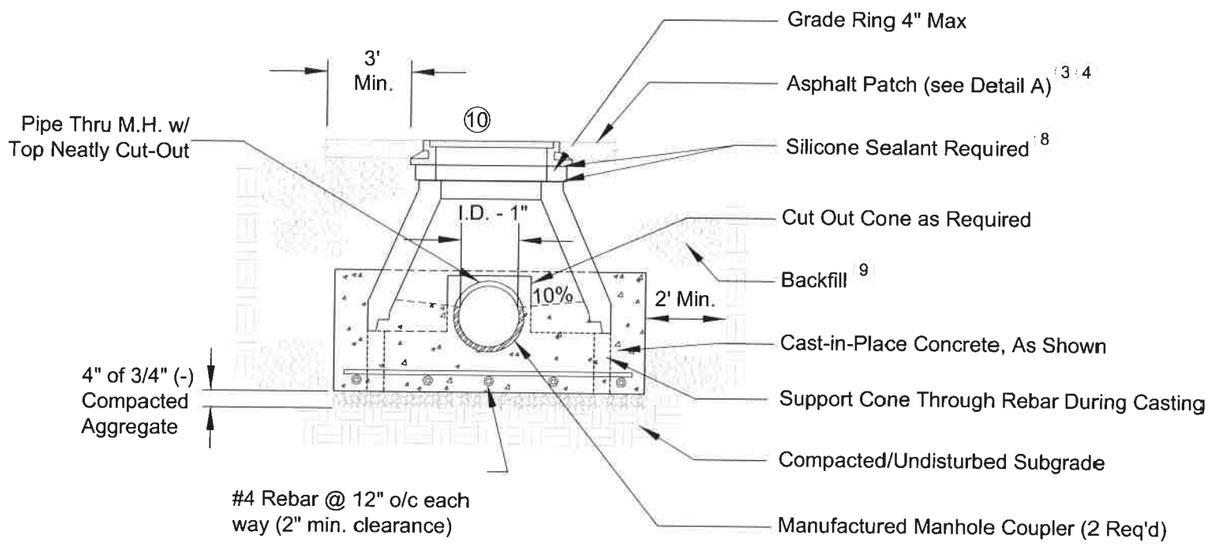

SECTION 1
NTS

NOTES:

1. Manholes shall be constructed watertight- test per Standard Construction Specification.
2. Steps shall not be installed in the manholes.
3. Manholes located in paved areas shall have asphaltic patch four inches (4") thick placed in two lifts to exact line and grade of street. Manhole ring shall be quarter inch (1/4") below finished patch.
4. Manholes located in gravel streets or alleys shall have lid adjusted to two inches (2") below gravel surface.
5. All cast-in-place conc. shall be troweled smooth.
6. Manufactured watertight manhole couplers are required at all pipe penetrations.
7. Contractor shall comply with the most current OSHA requirements for excavations.
8. Seal between riser and cone, riser and riser, and riser and frame with two parallel three-eighths of an inch (3/8") diameter beads of silicone sealant.
9. Backfill around manholes shall be Class 'D' for all roadways and alleys; Class 'A' for all other locations unless specifically allowed or directed otherwise by the City Engineer.
10. City standard manhole ring and cover; a 4.5" traffic rated ring and lid will be allowed with approval from City Engineer.
11. Type D manholes shall comply with the Standard Construction Drawing for Manhole Base Details.

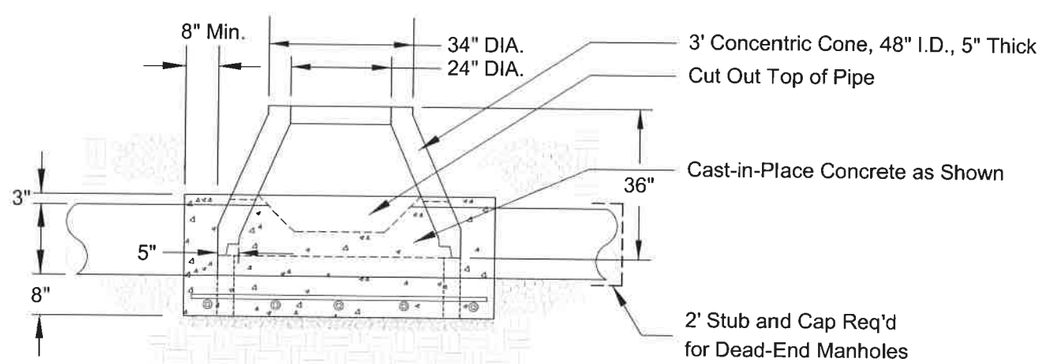

SECTION 2
NTS

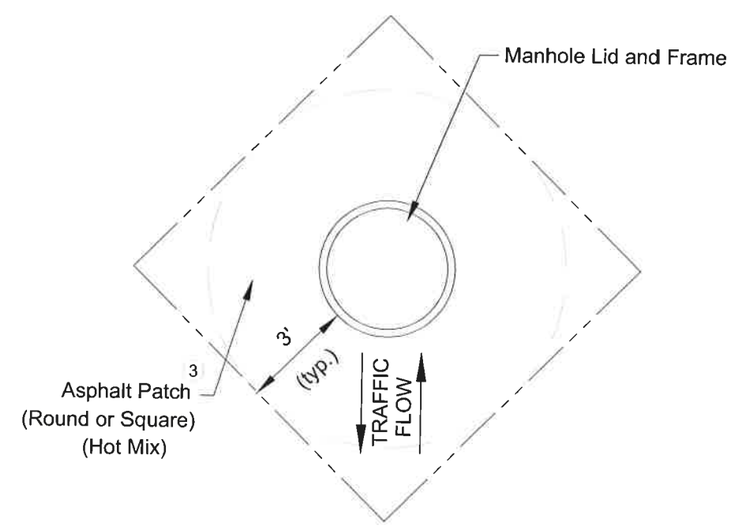

A ASPHALT PATCH DETAIL

REVISIONS	
DATE	DESCRIPTION

SIGNED AND DATED

PROFESSIONAL ENGINEER REGISTERED 8832 5-19-14 STATE OF IDAHO KEVIN LILLY

DRAFTED BY: RHBIII/KWK
CHECKED BY: K.Lilly
DRAWING SCALE: NTS
DATE: 3-3-2014

SHALLOW SANITARY MANHOLE

CITY OF MOSCOW
ENGINEERING DEPARTMENT

DRAWING NUMBER: 23

NOTES:

1. Raised letters are Sharp Face Gothic font; 2.5" for "SANITARY" and "STORM," 1.5" for "CITY OF MOSCOW." Center word about center line.
2. Cast covers of Grey Cast Iron; ASTM A48 Class 138.
3. All covers shall be interchangeable within the dimensions shown. All mating surfaces shall be machine finished to ensure a non-rocking fit The inside vertical recessed face of the ring and the vertical outside edge of the cover shall be machined or manufactured to the fallowing tolerances:
   Ring - +3/32 inch to -3/32 inch
   Cover - +3/32 inch to -3/32 inch
4. Rings (traffic rated) of lesser height may be used in special circumstances, as allowed by the City Engineer.

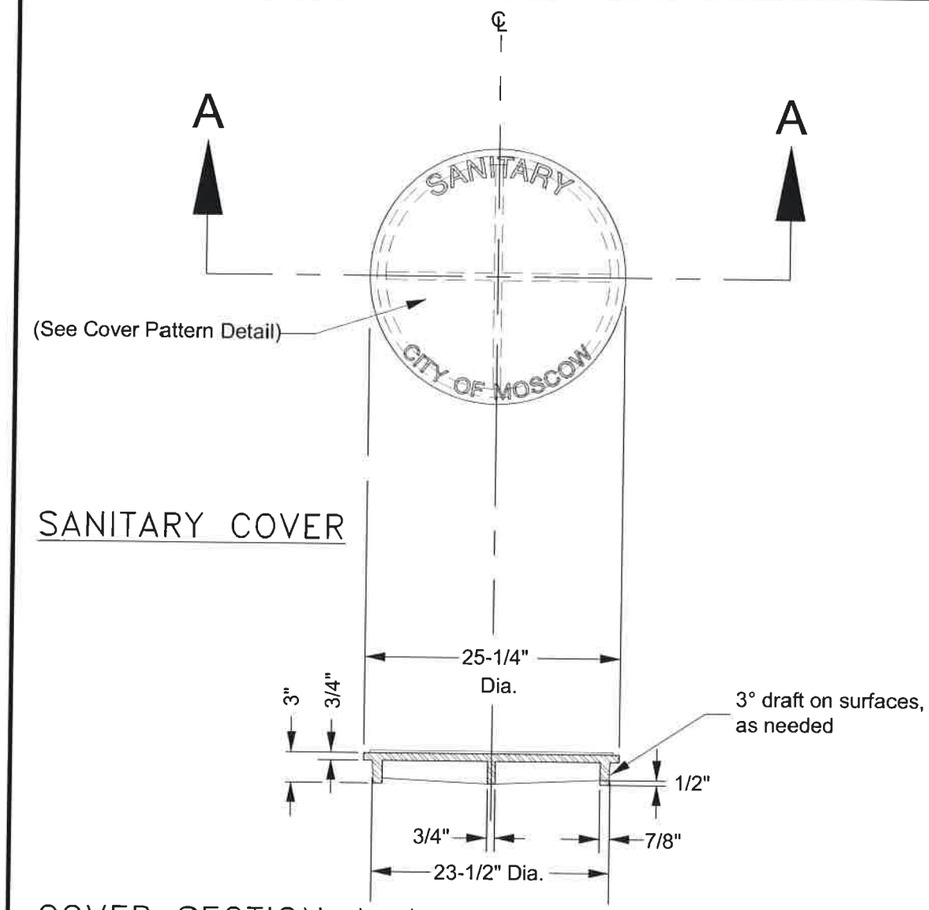

SANITARY COVER

COVER SECTION A–A

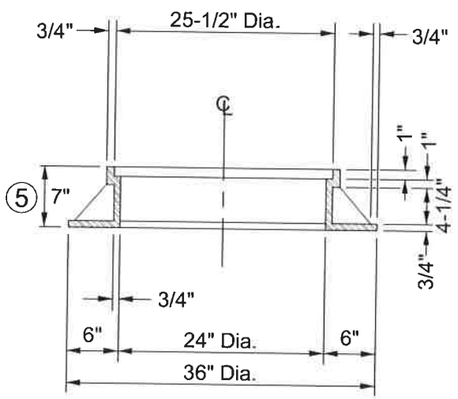

RING SECTION B–B

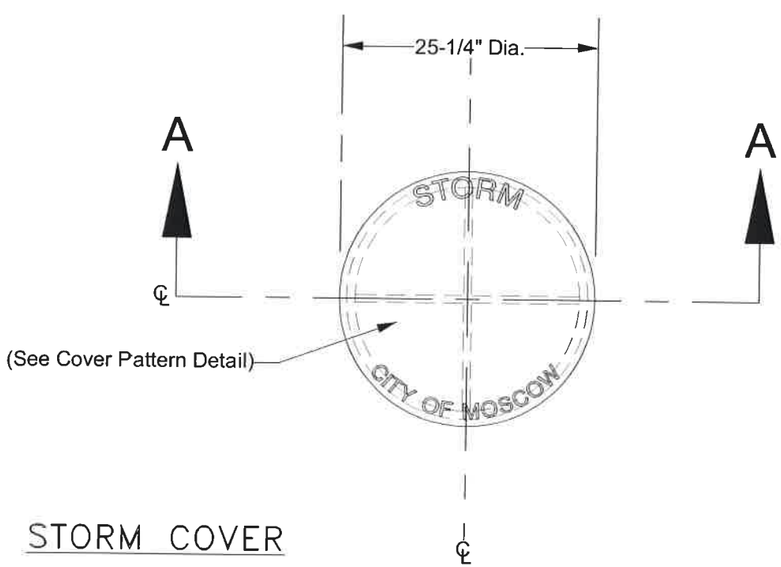

STORM COVER

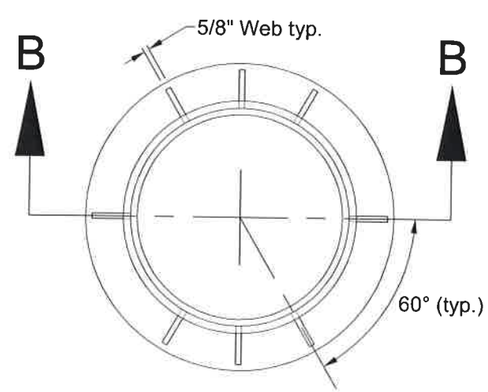

RING

COVER PATTERN DETAILS

REVISIONS	
DATE	DESCRIPTION

SIGNED AND DATED

PROFESSIONAL ENGINEER REGISTERED 8832 STATE OF IDAHO KEVIN LILLY 5-19-14

DRAFTED BY: CEE/KWK	CHECKED BY: K.Lilly
DRAWING SCALE: NTS	DATE: 3-4-2014

STORM & SANITARY MANHOLE RING & COVER

CITY OF MOSCOW
ENGINEERING DEPARTMENT

DRAWING NUMBER: 24

Note:
All channels to be 'U' shaped (See Channel X-Section)

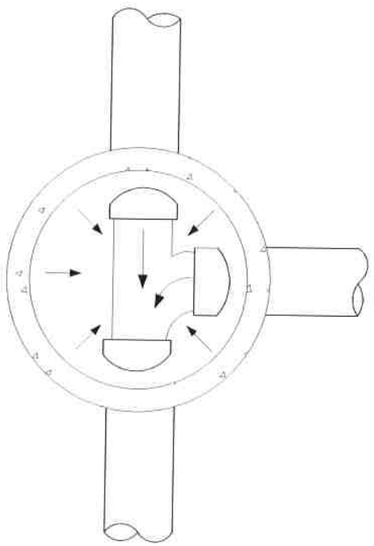

TYPE A

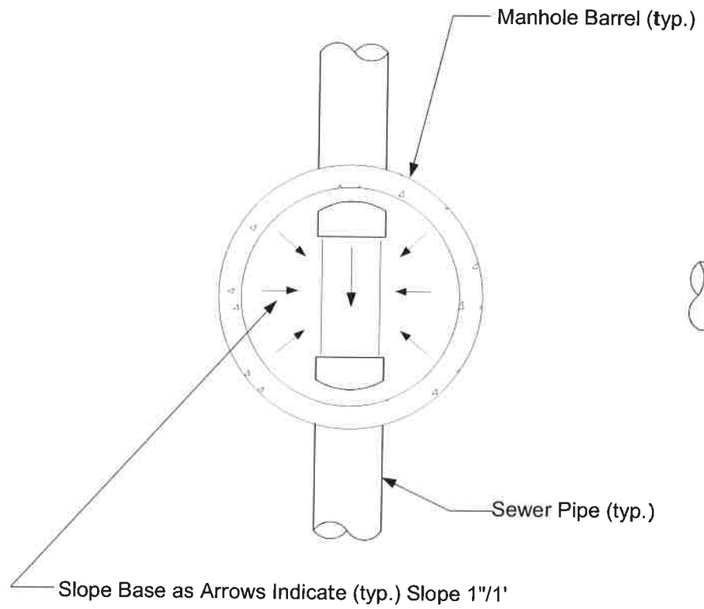

TYPE B

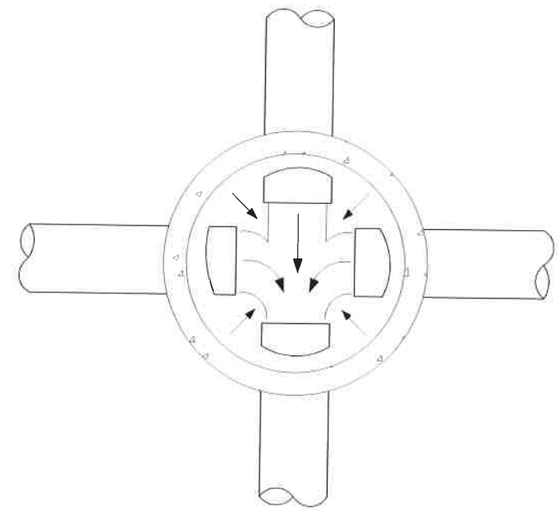

TYPE C

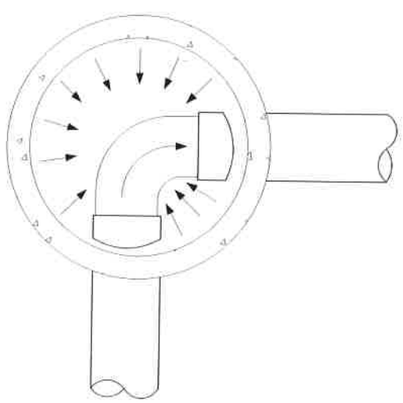

TYPE D

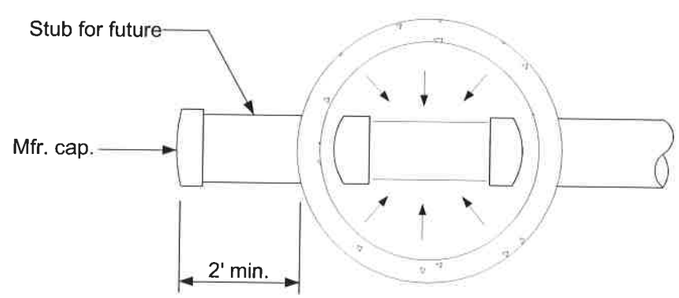

TYPE E
For Dead End Line

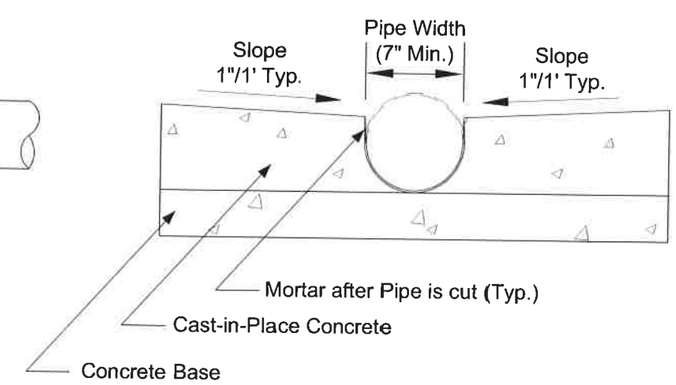

CHANNEL X-SECTION

REVISIONS	
DATE	DESCRIPTION

SIGNED AND DATED

PROFESSIONAL ENGINEER REGISTERED 8832 5-19-14 STATE OF IDAHO KEVIN LILLY

DRAFTED BY: CEE/KWK
CHECKED BY: K.Lilly
DRAWING SCALE: NTS
DATE: 3-4-2014

MANHOLE BASE DETAILS

CITY OF MOSCOW
ENGINEERING DEPARTMENT

DRAWING NUMBER: 25

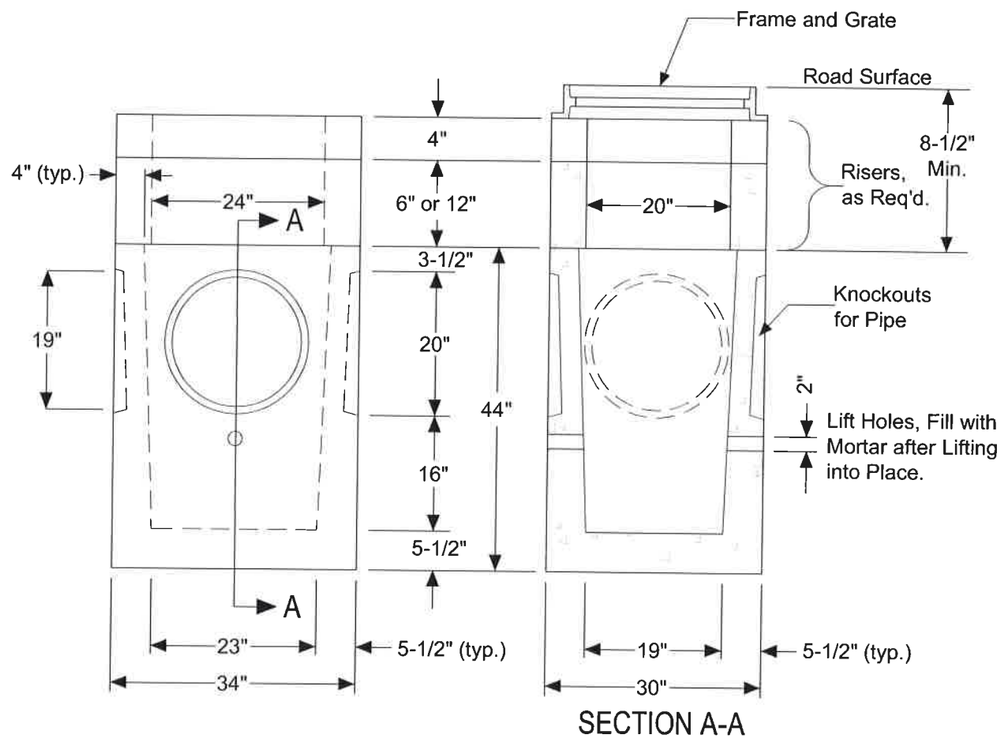

CATCH BASIN

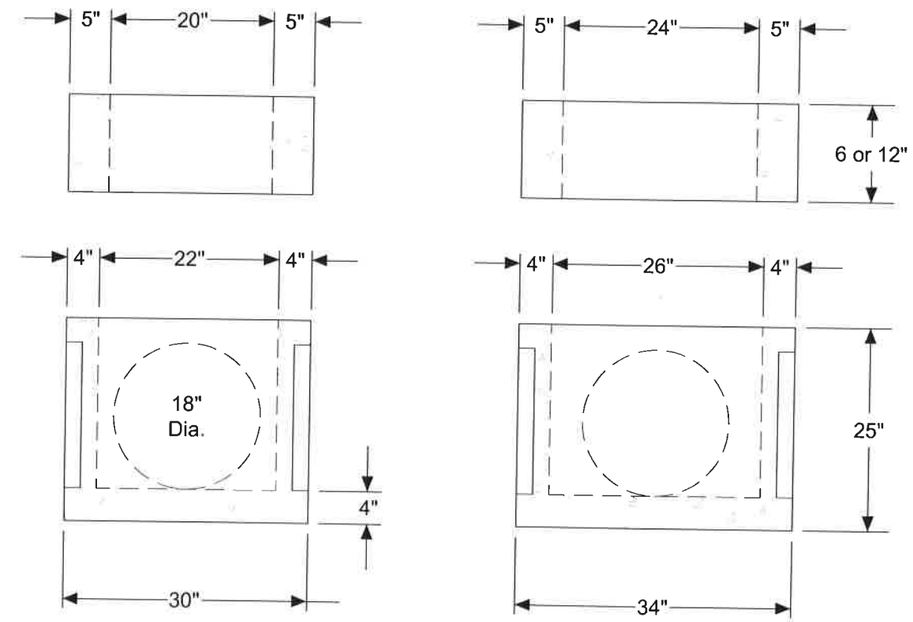

CATCH INLET

NOTES:

1. Catch Basins shall be used in all City streets, City parking lots, and City alleys for catchment and conveyance of surface runoff. Catch Inlets are not to be used in these locations unless specifically allowed by the City Engineer.
2. Catch Basin shall be precast concrete per WSDOT Catch Basin Type 1 and Catch Inlets per WSDOT Concrete Inlet, unless otherwise approved by the City Engineer.
3. Catch Basins located in paved areas shall have asphaltic patch four inches (4") thick (in two lifts) restoring surface to original line and grade. (see note 6)
4. Catch basins located in gravel streets or alleys shall have grate adjusted two inches (2") below gravel surface.
5. All pipes shall protrude 1"-2" into the basin and shall be neatly mortared all around (inside and outside). Exit pipe to manhole or storm main shall have 1'-6" minimum cover.
6. Catch Basins shall be set 0.10 foot lower than adjoining street grade.
7. All materials shall be manufactured in the U.S.A.
8. Catch Basins and Inlets shall be pre-cast concrete conforming to AASHTO M199 or ASTM C478, as shown.
9. Catch Basins and Inlets shall be backfilled to grade as per adjoining pipe trench backfill.
10. Catch Inlets may only be used as a 'bubbler', area drain, or where clearance over some particular obstacle is necessary and if approved by the City Engineer.
11. Frames and Grates shall be as per the Catch Basin & Catch Inlet Gates and/or the Combination Inlet Standard Drawing.

REVISIONS	
DATE	DESCRIPTION

SIGNED AND DATED

PROFESSIONAL ENGINEER REGISTERED 8832 5-19-14 STATE OF IDAHO KEVIN LILLY

DRAFTED BY: MAS/KWK
CHECKED BY: K.Lilly
DRAWING SCALE: NTS
DATE: 3-4-2014

CATCH BASIN & CATCH INLET

CITY OF MOSCOW
ENGINEERING DEPARTMENT

DRAWING NUMBER: 26

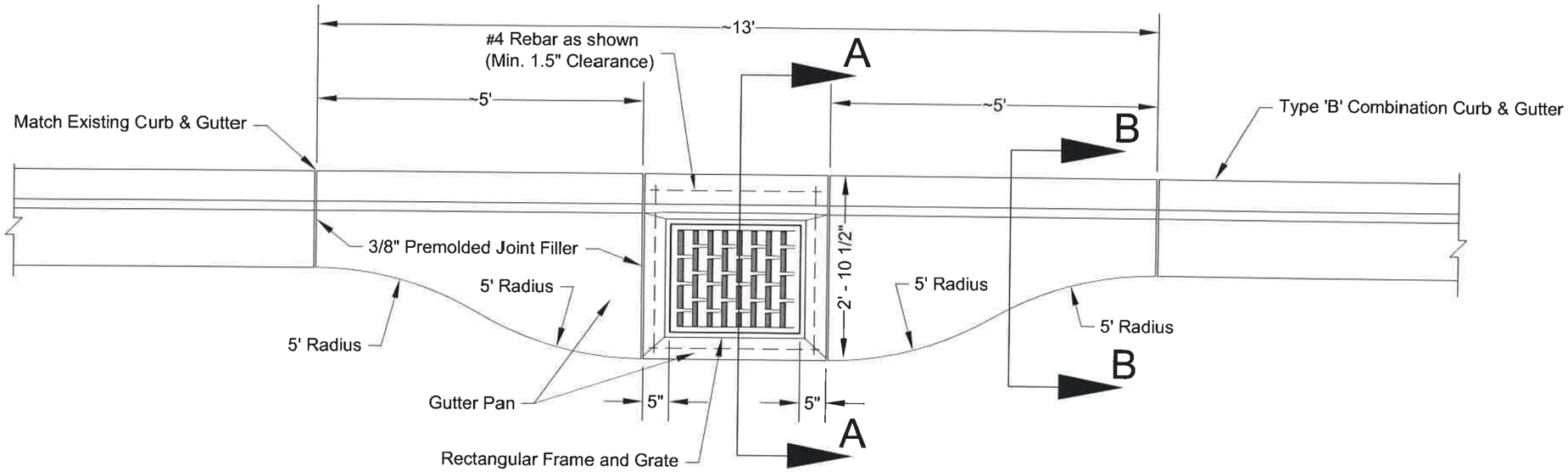

CATCH BASIN GUTTER PAN

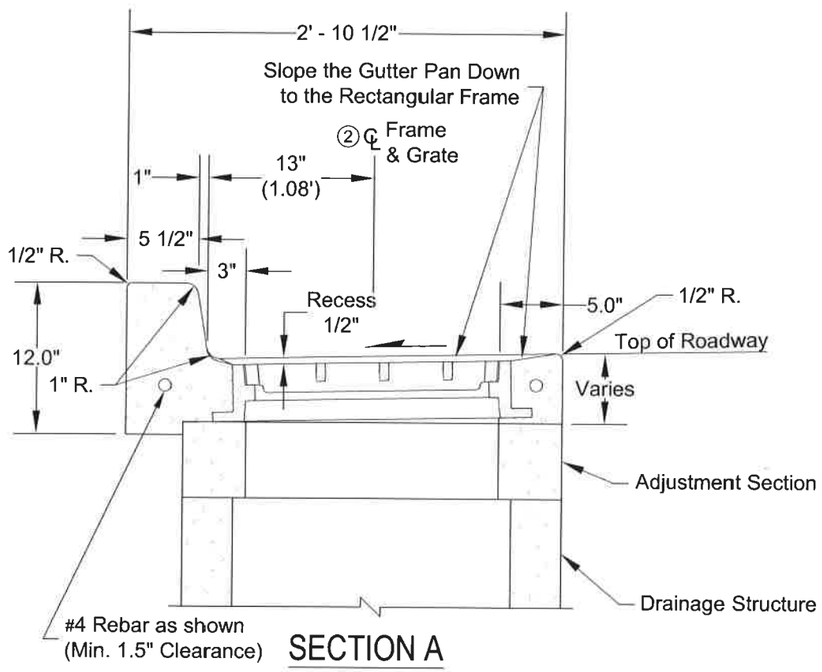

SECTION A

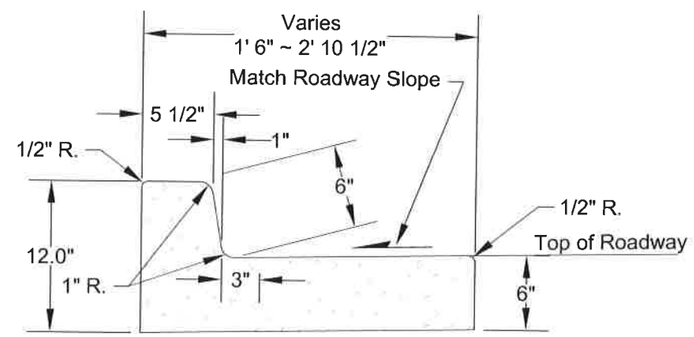

SECTION B

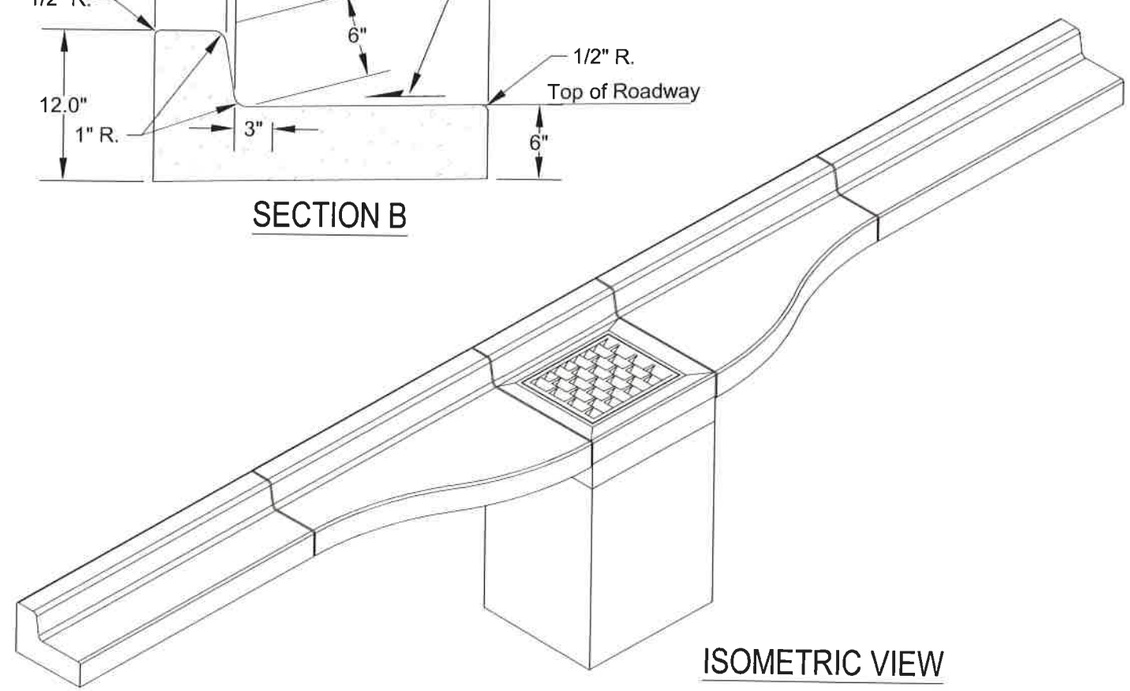

ISOMETRIC VIEW

NOTES:

1. Curb and Gutter Pan design as per WSDOT Cement Concrete Curb And Gutter Pan.
2. The centerline of the drainage structure may differ from the centerline of the frame and grate.
3. The intent of this design is to facilitate the compaction of hot mix asphalt pavement adjacent to a drainage structure.

REVISIONS	
DATE	DESCRIPTION

SIGNED AND DATED

PROFESSIONAL ENGINEER REGISTERED 8832 5-19-14 STATE OF IDAHO KEVIN LILLY

DRAFTED BY: C.Edwards

CHECKED BY: K.Lilly

DRAWING SCALE: N.T.S.

DATE: 3-4-2014

CURB & GUTTER PAN

CITY OF MOSCOW
ENGINEERING DEPARTMENT

DRAWING NUMBER: 27a

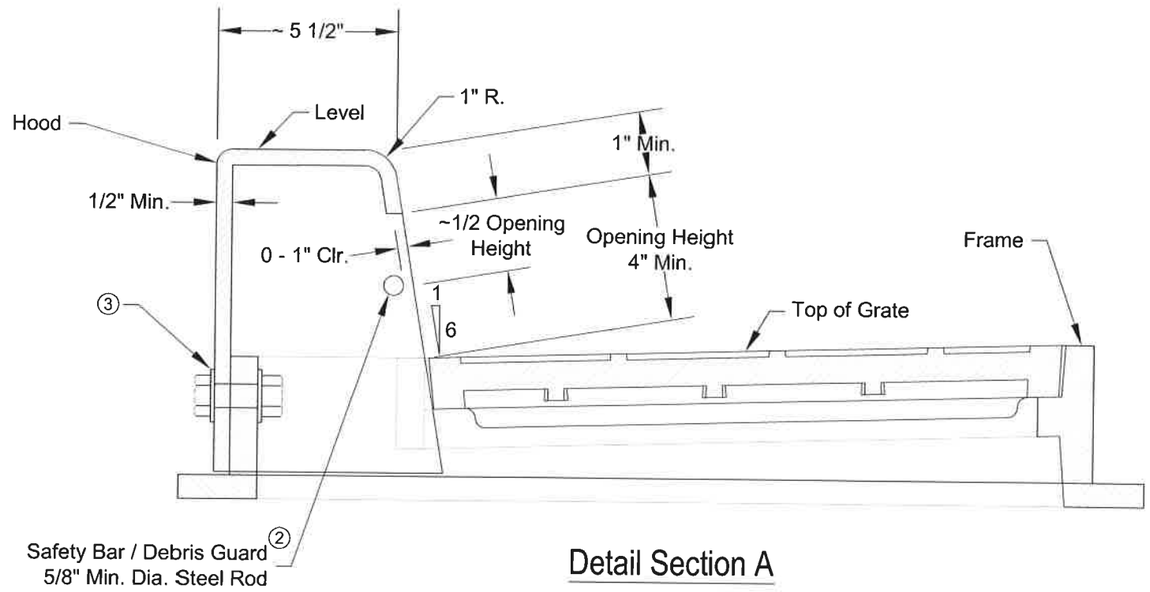

Detail Section A

NOTES:

1. Curb and Gutter Pan design as per WSDOT Combination Inlet.
2. The dimensions of the Frame and Hood may vary slightly among different manufacturers. The Frame may have cast features intended to support a grate guard. Hood units shall mount outside of the Frame. The methods for fastening the Safety Bar / Debris Guard Rod to the Hood may vary. The Hood may include casting lugs. The top of the Hood may be cast with a pattern.
3. Attach the Hood to the frame with two 3/4" × 2" hex head bolts, nuts, and oversize washers. The washers shall have diameters adequate to assure full bearing across the slots.
4. When bolt-down grates are specified, provide two holes in the frame that are vertically aligned with the grate slots. Tap each hole to accept 5/8" × - 11 NC × 2" hex head cap screws. Location of bolt-down holes varies among different manufacturers. See BOLT- DOWN DETAIL, WSDOT Standard Plan B-30.10.
5. This plan is intended to show the installation details of a manufactured product. It is not the intent of this plan to show the specific details necessary to fabricate the castings shown on this drawing.
6. The asymmetry of the Combination Inlet shall be considered when calculating the offset distance for the catch basin. See SECTION A.

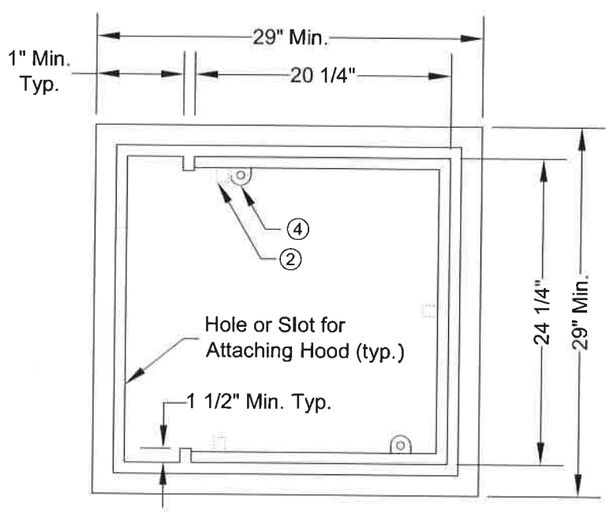

FRAME DETAIL
TOP VIEW

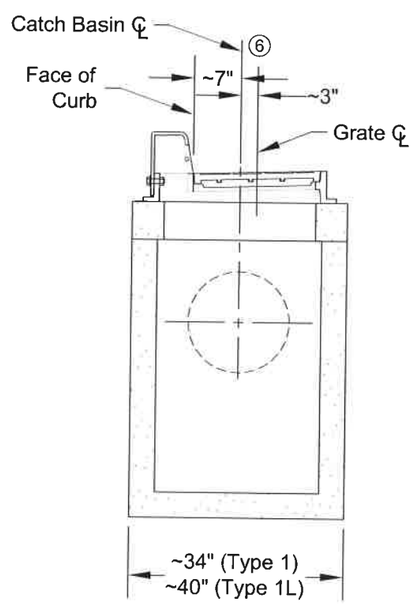

SECTION A

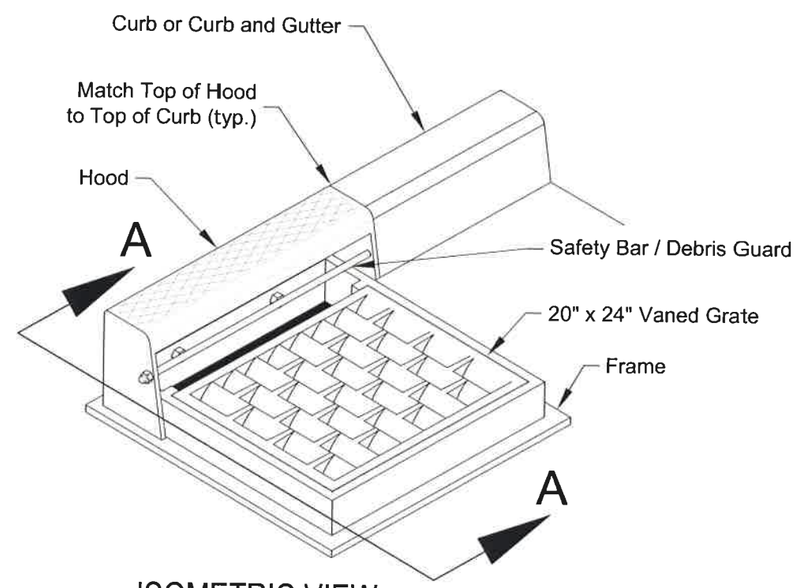

ISOMETRIC VIEW
COMBINATION INLET

REVISIONS	
DATE	DESCRIPTION

SIGNED AND DATED

PROFESSIONAL ENGINEER REGISTERED 8832 5-19-14 STATE OF IDAHO KEVIN LILLY

DRAFTED BY: C.Edwards
CHECKED BY: K.Lilly
DRAWING SCALE: N.T.S.
DATE: 3-4-2014

COMBINATION INLET

CITY OF MOSCOW
ENGINEERING DEPARTMENT

DRAWING NUMBER: 27b

NOTE:
Vanes to be placed towards origin of water flow

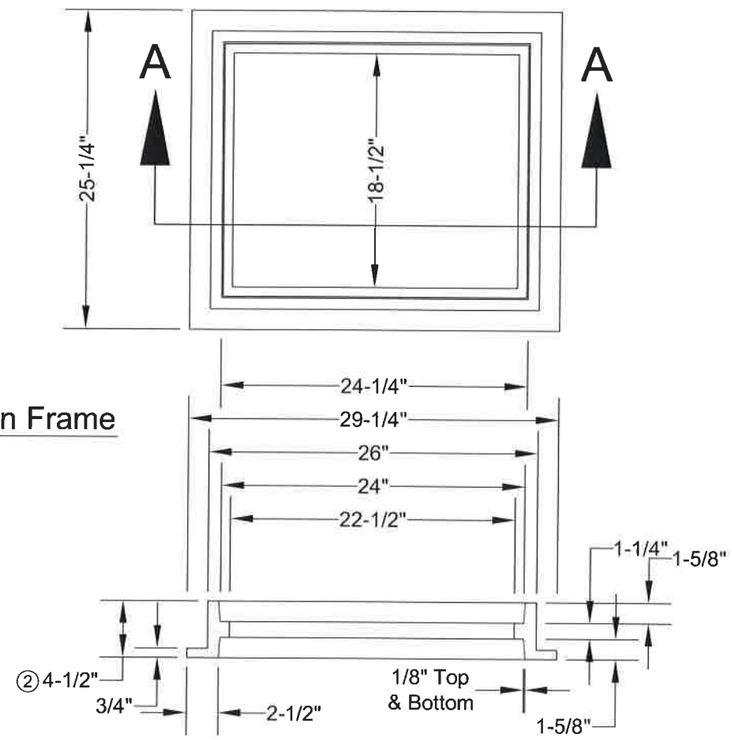

Cast Iron Frame

SECTION A-A

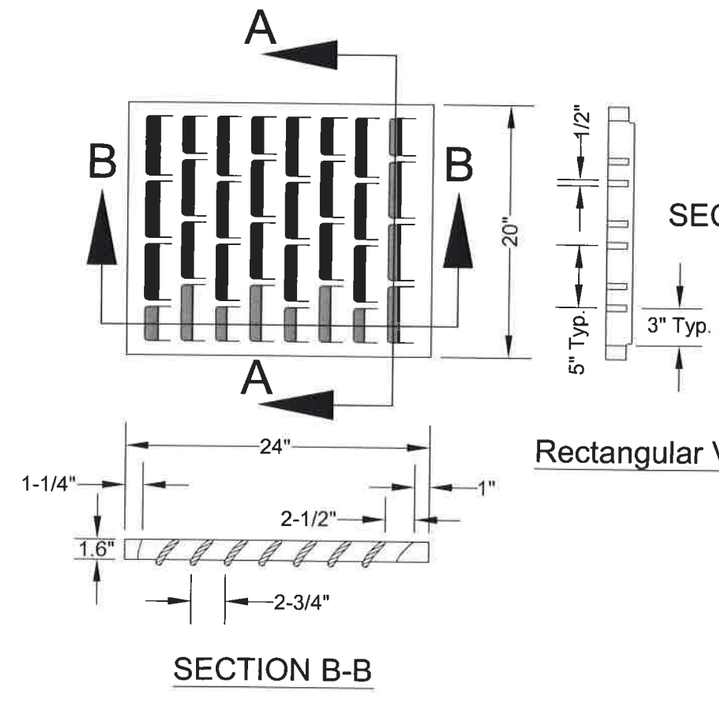

SECTION A-A

Rectangular Vaned Grate

SECTION B-B

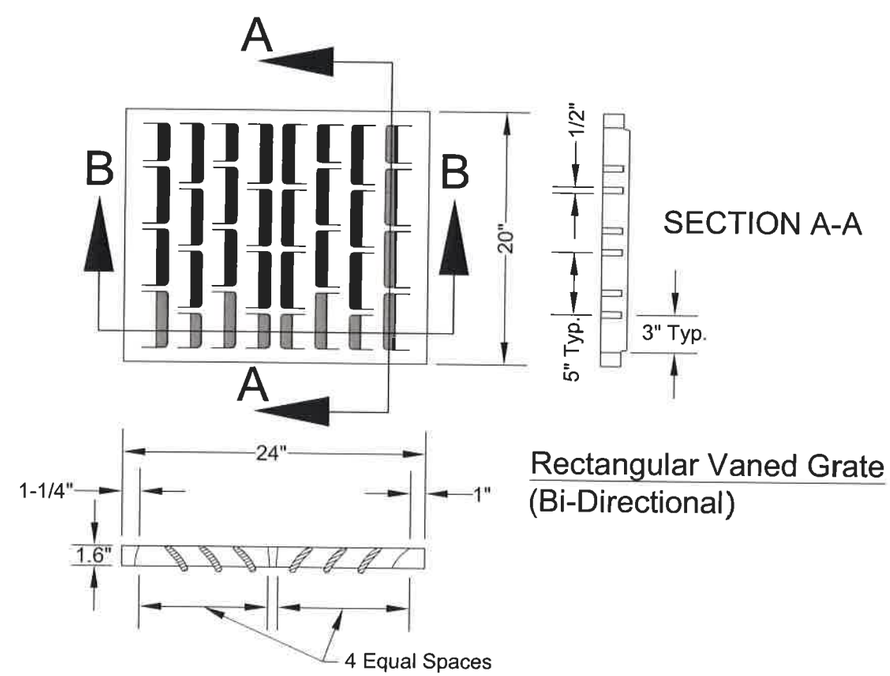

SECTION A-A

Rectangular Vaned Grate
(Bi-Directional)

SECTION B-B

NOTES:

1. Standard Frame and Grate as per WSDOT Rectangular Frame and Rectangular Grate.
2. A 2-1/8" riser is also available.
3. All pipes shall protrude 1"-2" into the inlet and shall be neatly mortared all around (inside and outside). Exit pipe shall have 1.5 foot min. cover.
4. Inlet grates and catch basins in paved areas shall be set one-tenth of a foot (0.10') lower than adjacent ground elevation.
5. All materials shall be manufactured in the U.S.A.
6. Type "A" grate required in all installations unless specifically allowed otherwise by the City Engineer.
7. Catch basins located in unpaved streets, alleys, or landscaped area shall have grate adjusted two inches (2") below gravel surface.
8. All basins, frames, and grates shall be rated for heavy traffic loading.
9. Rectangular solid metal cover may be used at junction points where grate is not necessary.

REVISIONS	
DATE	DESCRIPTION

SIGNED AND DATED

PROFESSIONAL ENGINEER REGISTERED 8832 5-19-14 STATE OF IDAHO KEVIN LILLY

DRAFTED BY: CEE/KWK	CHECKED BY: K.Lilly	DRAWING SCALE: N.T.S.	DATE: 3-4-2014

CATCH BASIN & INLET
TYPE 'A' GRATE

CITY OF MOSCOW
ENGINEERING DEPARTMENT

DRAWING NUMBER:
27c

NOTE:
Vanes to be placed towards origin of water flow

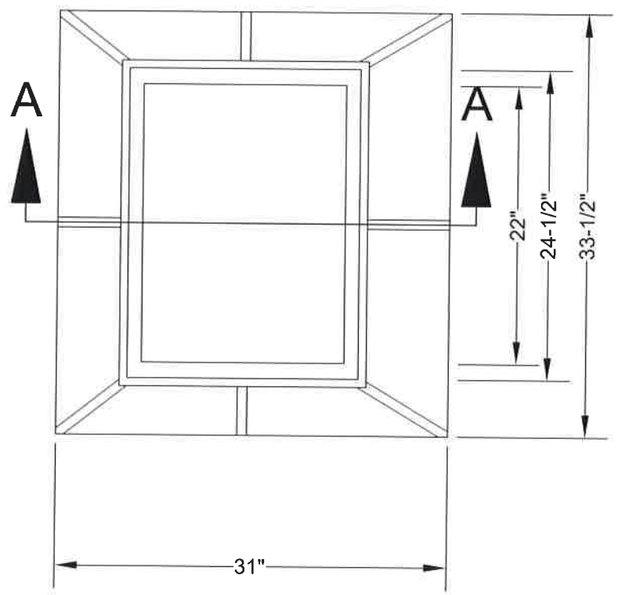

Frame
(Cast Iron)

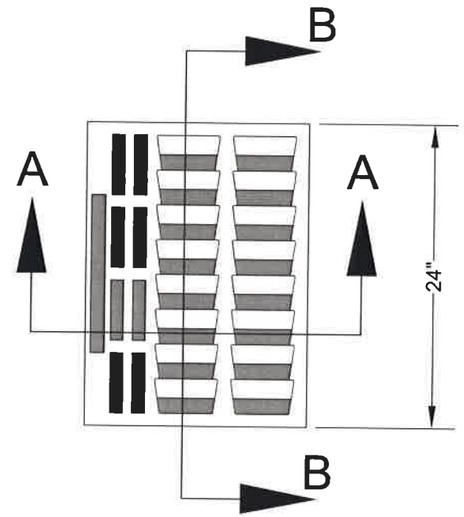

Grate
(Ductile Iron)

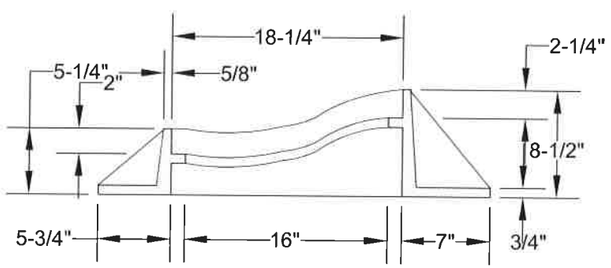

SECTION A-A

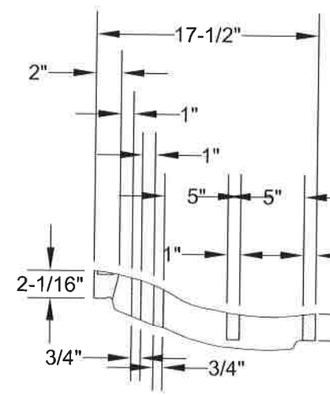

SECTION A-A

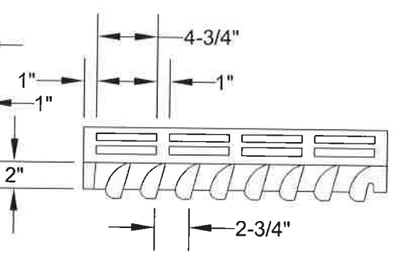

SECTION B-B

NOTES:

1. All pipes shall protrude 1"-2" into the inlet and shall be neatly mortared all around (inside and outside). Exit pipe shall have 1.5 foot min. cover.
2. Inlet grates and catch basins in paved areas shall be set one-tenth of a foot (0.10') lower than adjacent ground elevation.
3. All materials shall be manufactured in the U.S.A.
4. Catch basins located in unpaved streets, alleys, or landscaped areas shall have grate adjusted two inches (2") below gravel surface.
5. All basins, frames, and grates shall be rated for heavy traffic loading.

REVISIONS

DATE	DESCRIPTION

SIGNED AND DATED

PROFESSIONAL ENGINEER REGISTERED 8832 STATE OF IDAHO KEVIN LILLY

DRAFTED BY: MAS/KWK

CHECKED BY: K.Lilly

DRAWING SCALE: N.T.S.

DATE: 2-2-2012

CATCH BASIN & INLET TYPE 'B' GRATE (Rolled Curb)

CITY OF MOSCOW
ENGINEERING DEPARTMENT

DRAWING NUMBER: 27d

Sanitary Sewer House Connection

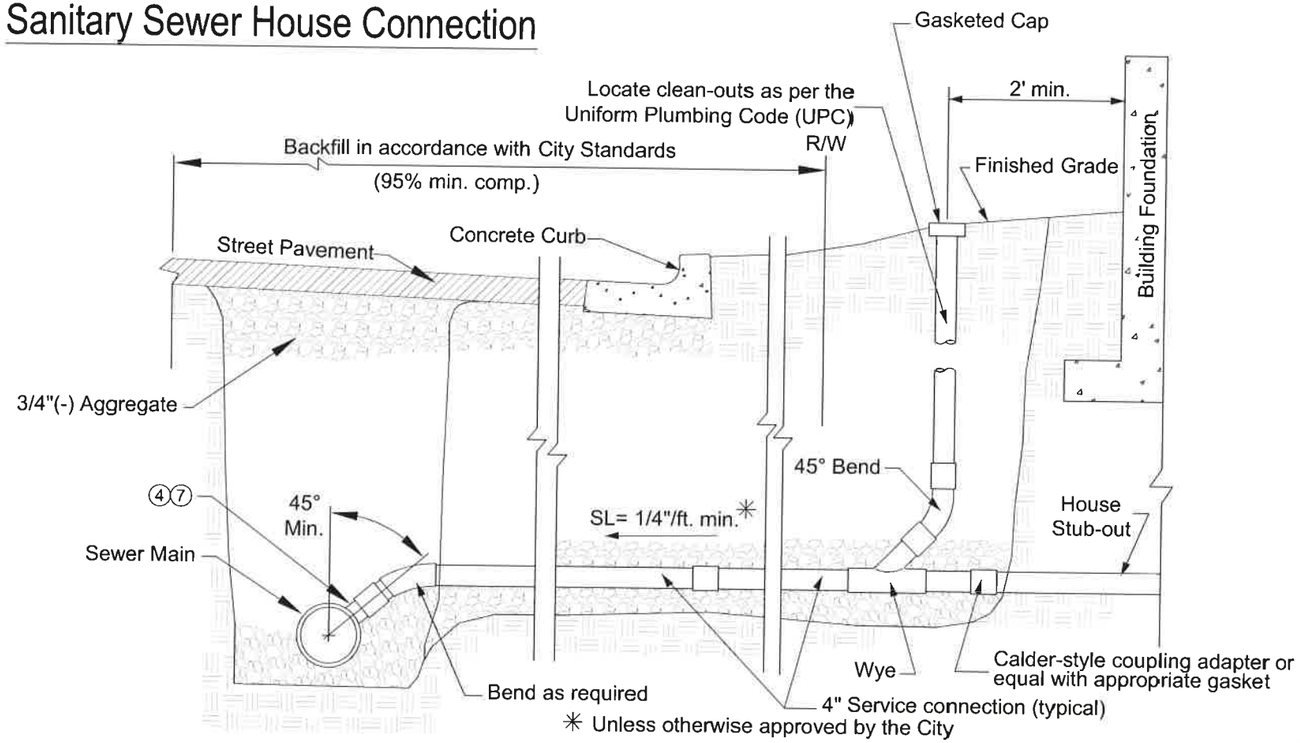

Sanitary & Storm Sewer Service Laterals (Stubs)

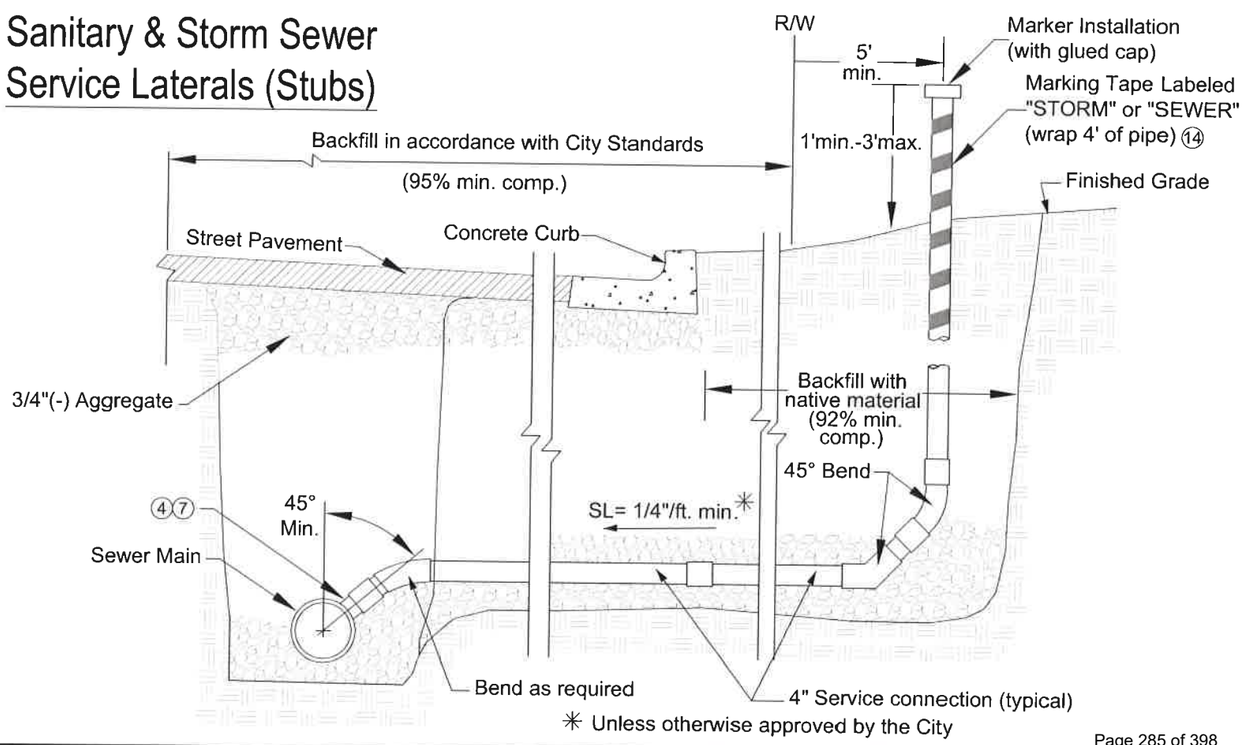

NOTES:

1. Pipe materials shall be as follows:
   a. Within public right-of-way: SDR 35 PVC, (ASTM D-3034), with integral gasketed bell and spigot joints.
   b. From right-of way to within two feet (2') of the house: SDR 35 PVC, (ASTM D-3034), with integral gasketed bell and spigot joints or Schedule 40 ABS plastic pipe with glued fittings.

   If the water service line and sanitary or storm drain service lines from the right-of-way to the house are installed in the same trench, the piping material shall be Schedule 40 ABS with glued fittings unless all three of the following requirements are met:
   a. The bottom of the water pipe, at all joints, shall be at least twelve inches (12") above the top of the sanitary or storm drain service line.
   b. The water pipe shall be placed on a solid shelf, excavated at one side of the common trench, with a minimum clear horizontal distance of at least twelve inches (12") from the sanitary or storm drain service line.
   c. Where the sanitary or storm drain line crosses the water service line, the top of the sanitary or the storm drain line is a minimum of twelve inches (12") below the water service line.
2. Trench bottom to be prepared, as required, for a firm bed.
3. Existing sewer mains shall be tapped by the City, at the Owner's expense.
4. Sewer service laterals shall be connected to the new mains with manufactured wyes. Connection to existing mains require ROMAC 'CB' saddles, or equivalent.
5. Owner to obtain the necessary permits from the Moscow Community Development Department and Public Works Department.
6. This work shall comply with the Uniform Plumbing Code (UPC).
7. Sewer services shall connect to the sanitary sewer main at a point above the centerline of the pipe.
8. Construction to be inspected by the City.
9. Sanitary service laterals (stubs) shall be air tested with the sanitary sewer main.
10. All backfill under sidewalks shall be crushed aggregate. (95% minimum compaction)
11. The service lateral (from main to house) shall be bedded in sand or 3/4"(-) crushed aggregate; from two inches (2") under the pipe to two inches (2") over the pipe.
12. SANITARY service laterals shall be green pipe from the main to the house, including stub outs and markers.
13. STORM service laterals shall be white pipe from the main to the house, including stub outs and markers.
14. Marking tape shall be three inch (3") wide commercially manufactured, and labeled "STORM DRAIN" for storm sewer and "SEWER" for sanitary sewer use.
15. Storm drain and sanitary sewer services (private) located within public street right-of-way or public utility easements shall have a 2.5' minimum burial depth unless specifically allowed otherwise by the City Engineer.

REVISIONS	
DATE	DESCRIPTION

SIGNED AND DATED

PROFESSIONAL ENGINEER REGISTERED 8832 5-19-14 STATE OF IDAHO KEVIN LILLY

DRAFTED BY: KWK
CHECKED BY: K.Lilly
DRAWING SCALE: NTS
DATE: 2-3-2012

SANITARY & STORM SEWER SERVICE CONNECTIONS

CITY OF MOSCOW
ENGINEERING DEPARTMENT

DRAWING NUMBER: 28

✳ Contractor shall insure that corporation stop is turned open before backfilling trench

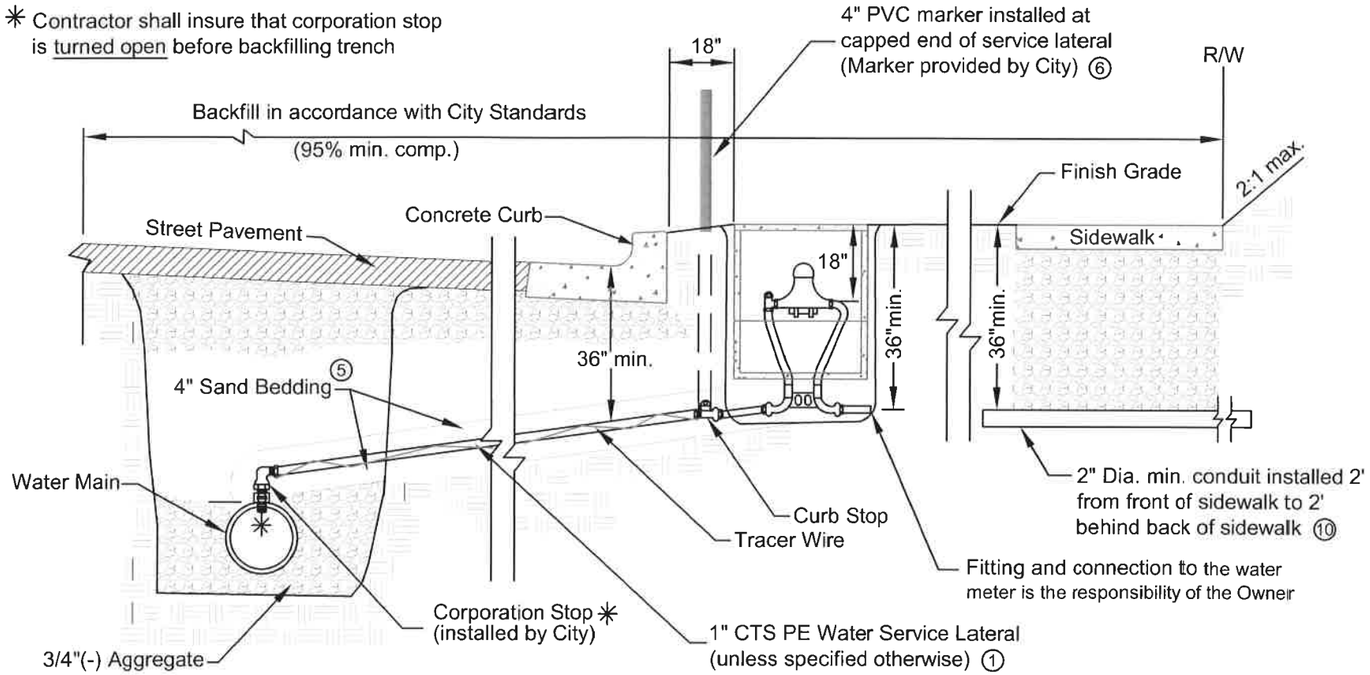

Water Meter Connection (with green strip)

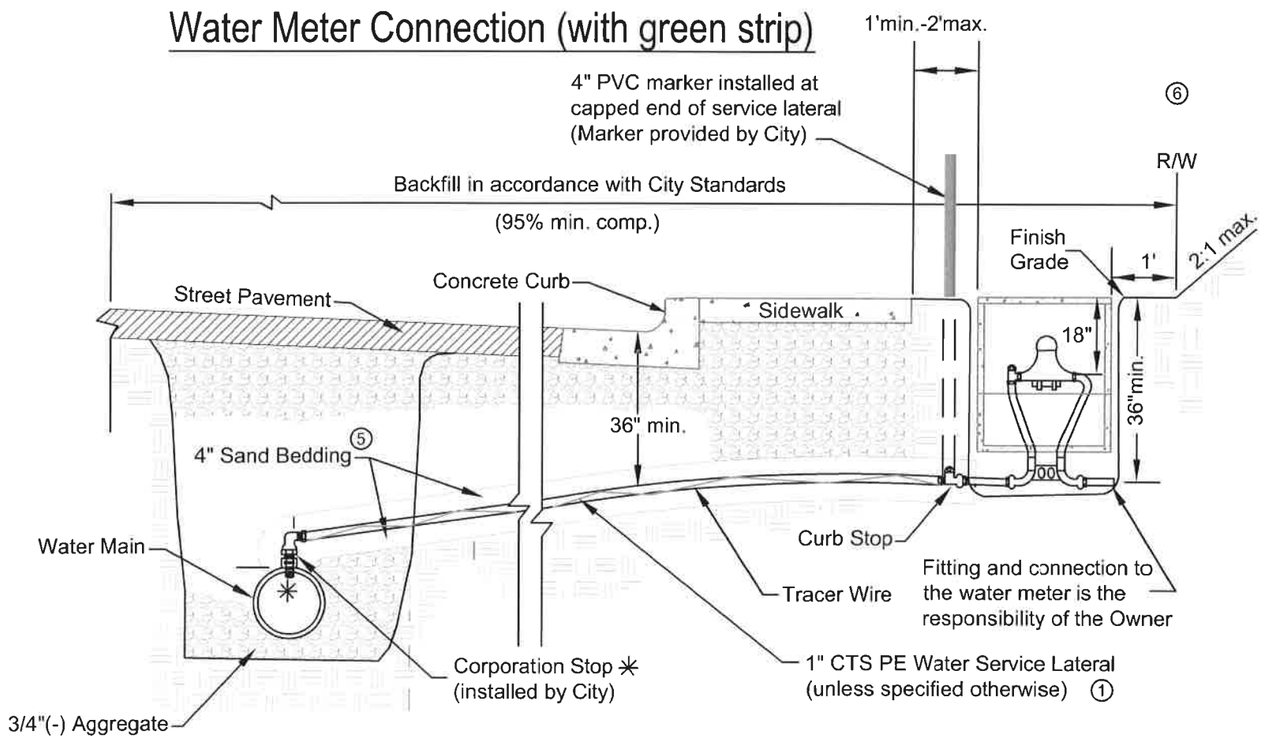

Water Meter Connection (no green strip)

✳ Contractor shall insure that corporation stop is turned open before backfilling trench

NOTES:

1. Pipe and fittings, from the water main to the curb stop, will be supplied by the City.
2. Water main shall be tapped by the City.
3. Trench bottom to be prepared, as required, for a firm bed.

   If the water service line and sanitary or storm drain service lines, from the right-of-way to the house, are installed in the same trench, then all three of the following requirements shall be met:
   a. The bottom of the water pipe, at all joints, shall be at least twelve inches (12") above the top of the sanitary or storm drain service lines.
   b. The water pipe shall be placed on a solid shelf, excavated at one side of the common trench, with a minimum clear horizontal distance of at least twelve inches (12") from the sanitary or storm drain service line.
   c. Where the sanitary or storm drain line crosses the water service line, the top of the sanitary or the storm drain line is a minimum of twelve inches (12") below the water service line.
4. The roadway subgrade shall be established prior to the installation of the water service laterals.
5. The water service lateral shall be bedded in sand or pea gravel from four inches (4") under the pipe to four inches (4") over the pipe.
6. After the installation of the water service lateral, a 4" PVC marker shall be placed at the capped end of the curb stop. The marker will be provided by the City. It shall be the responsibility of the Contractor to install, maintain, and protect the marker.
7. The capped curb stop shall be located eighteen inches (18") beyond the back of curb, if placed in the green strip, and one foot (1') minimum to two feet (2') maximum beyond the back of sidewalk, if sidewalk is installed next to the curb.
8. The capped curb stop shall be buried to a minimum depth of thirty six inches (36") from finished grade elevation.
9. The water service lateral and curb stop shall be installed perpendicular to either the curb or the sidewalk.
10. When water meter is located in the green strip, a two inch (2") minimum diameter conduit shall be installed extending two feet (2') from the front of the sidewalk to two feet (2') behind the back of sidewalk.
11. Pipe installation shall be inspected by the City before the trench is backfilled.
12. Owner to obtain the necessary permits from the Moscow Community Development Department and Public Works Department.
13. The Owner's work shall comply with the Uniform Plumbing Code (UPC).
14. All backfill under sidewalks shall be 3/4"(-) crushed aggregate (95% min. compaction).

REVISIONS	
DATE	DESCRIPTION

SIGNED AND DATED

PROFESSIONAL ENGINEER REGISTERED 8832 5-19-14 STATE OF IDAHO KEVIN LILLY

DRAFTED BY: KWK
CHECKED BY: K.Lilly
DRAWING SCALE: NTS
DATE: 3-5-2014

WATER SERVICE CONNECTIONS

CITY OF MOSCOW
ENGINEERING DEPARTMENT

DRAWING NUMBER: 29

FIRE HYDRANT INSTALLATION

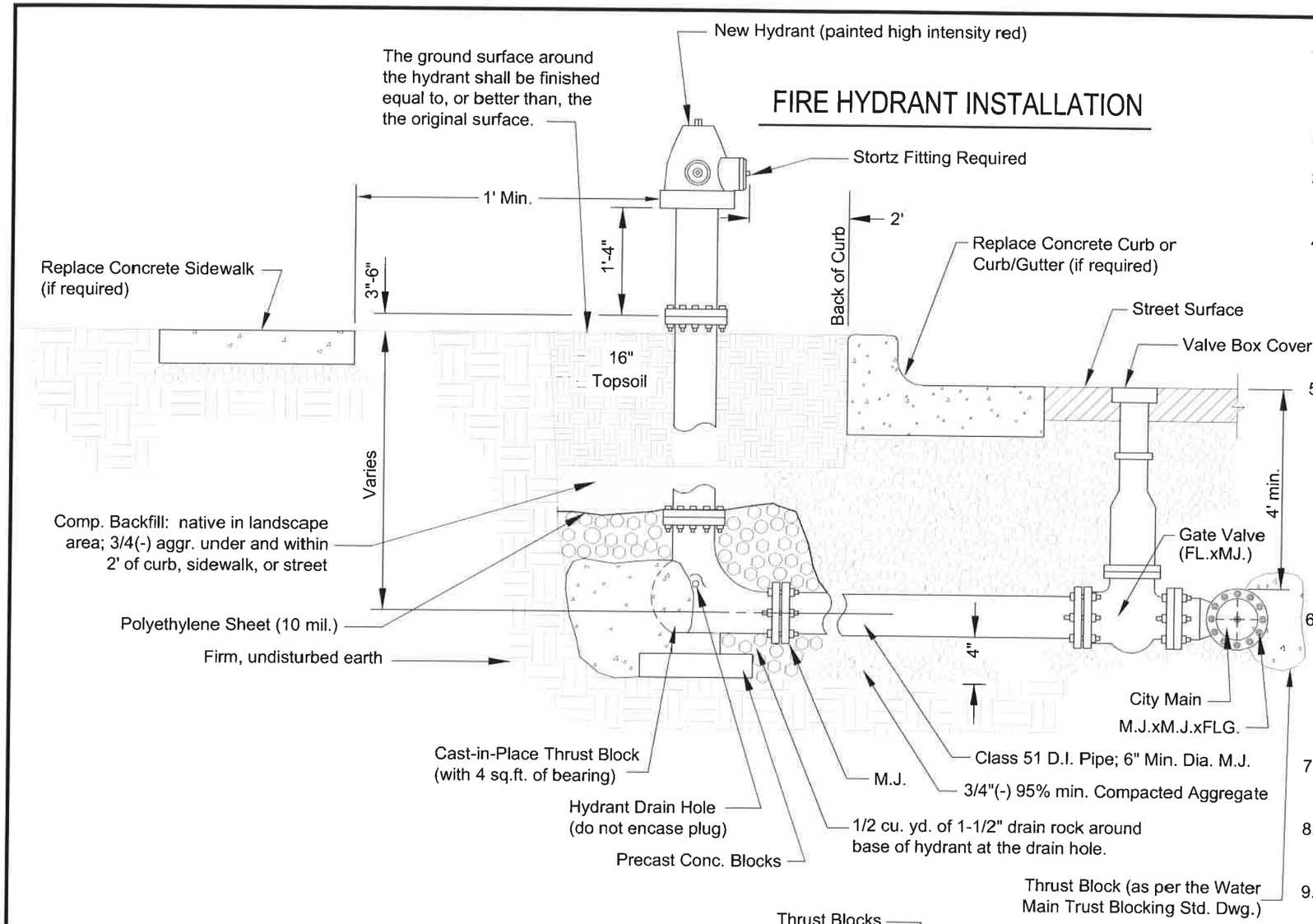

NOTES:

1. Thrust blocks shall be cast against undisturbed, firm earth.
2. Hydrants shall be set truly vertical.
3. Materials and installation shall also conform to the City's Standard Specifications.
4. FOR LIVE TAP ONLY: After the Contractor exposes the main, the City will provide the labor and pipe tapping tools for this connection at a set fee to the Contractor. Contractor is responsible for trench backfill and street patch in accordance with City Standards.
5. Where sidewalk is adjacent to or within four feet (4') of the back of curb the hydrant shall be located one foot (1') behind the sidewalk (measured from the face of the hydrant cap to back of sidewalk). Where there is curb but no sidewalk the hydrant shall be located two feet (2') from the back of curb (measured to the face of the hydrant cap). Where there is no sidewalk or curb locate the hydrant as directed by the City Engineer.
6. All fire hydrants and the water lines to the fire hydrants become the City's once installed. Twenty foot (20') wide public utility easements centered on and around the fire hydrant and the waterline to the fire hydrant shall be granted to the City.
7. Furnish and install protective bollards if required by the City Engineer.
8. A three foot (3') radius clear zone required all around fire hydrant, maximum slope of 10%.
9. Fire hydrant to be set to manufacturer elevation and bury specifications.

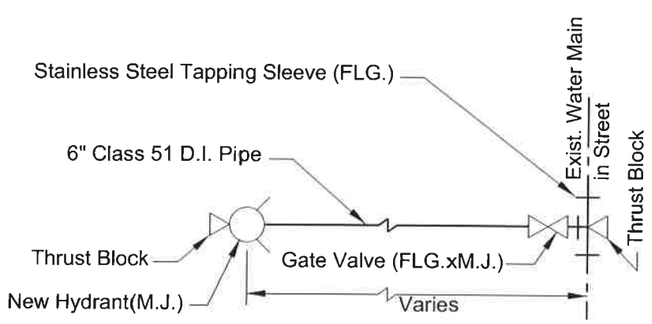

LIVE-TAP HYDRANT DETAIL

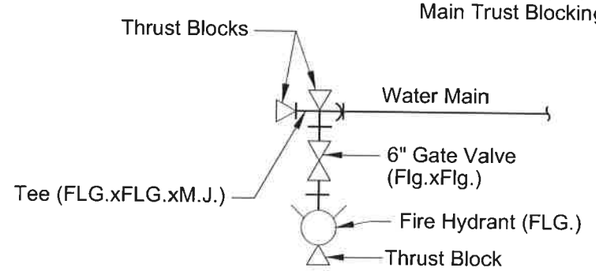

(A) OPTION 1

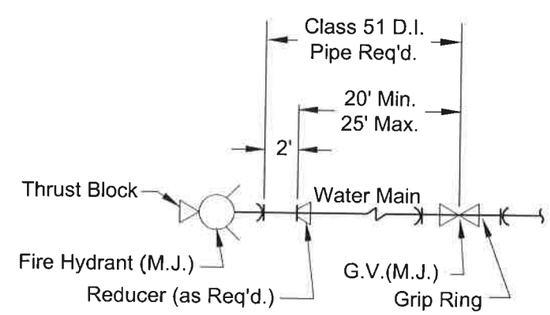

(B) OPTION 2

DEAD-END FIRE HYDRANT DETAILS

REVISIONS	
DATE	DESCRIPTION

SIGNED AND DATED

PROFESSIONAL ENGINEER REGISTERED 8832 5-19-14 STATE OF IDAHO KEVIN LILLY

DRAFTED BY: CEE/KWK
CHECKED BY: K.Lilly
DRAWING SCALE: NTS
DATE: 3-5--2014

FIRE HYDRANT ASSEMBLY

CITY OF MOSCOW ENGINEERING DEPARTMENT

DRAWING NUMBER: 30

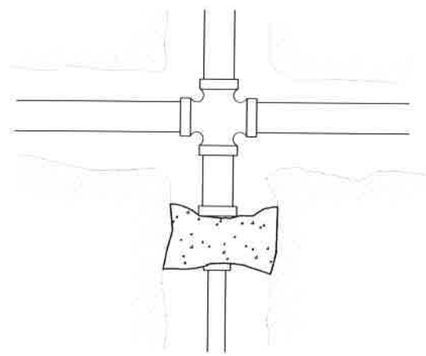

CROSS WITH REDUCER

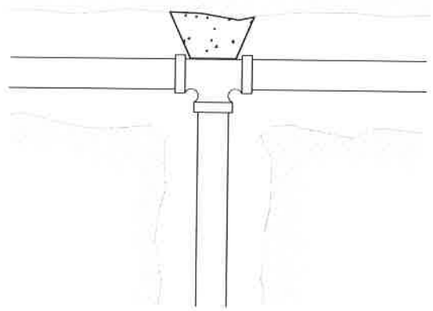

TEE

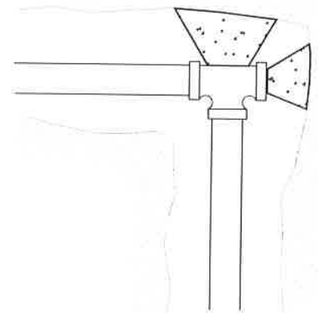

TEE WITH PLUG

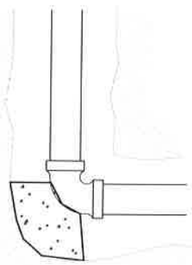

90° ELBOW

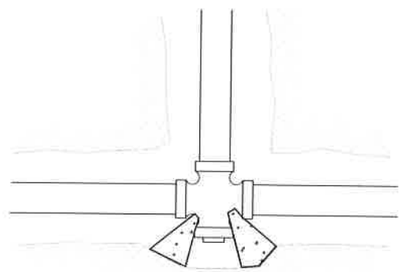

CROSS WITH PLUG

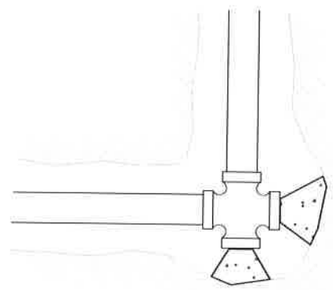

CROSS WITH 2 PLUGS

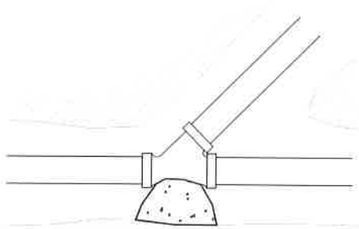

WYE

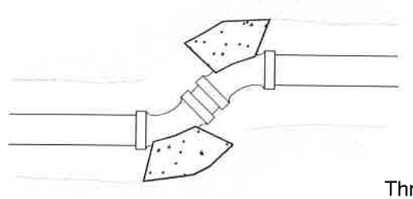

11-1/4°, 22-1/2°
OR 45° BENDS

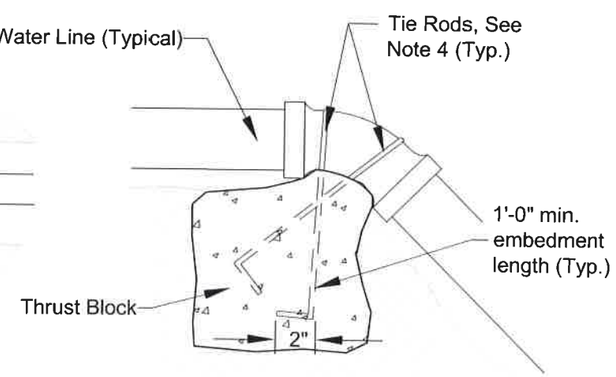

VERTICAL DOWN BENDS

THRUST BLOCK SIZE

Size of Pipe	Horizontal Bends Sq. Feet of Bearing on Undisturbed Earth				Vertical Down Bends Cu.Yds.
	Tees & Deadends	90°	45°	$22\frac{1}{2}°$ / $11\frac{1}{4}°$	
4"	2	3	1-1/2	1	1/2
6"	4	5-1/2	3	1-1/2	1/2
8"	7	9-1/2	5	2-1/2	1
10"	11	15	8-1/2	4	1-1/2
12"	15-1/2	22	12	6	2
16"	21	27	21	11	2-1/2

NOTES:

1. Thrust blocking for water mains shall be, as a minimum, the size indicated in the above Table.
2. Concrete shall be from a commercial source and be a minimum of 5-sack mix or ITD Class 22.
3. Concrete shall not be allowed in joints or in contact with pipes. Protect with plastic or paper sheeting prior to placing concrete.
4. Tie rods shall be 3/4" minimum diameter steel; coat tie rods with bituminous coating or approved equal. Hook (2" min.) all embedded ends.
5. The minimum distance between the fitting and excavated bank shall be three (3) pipe diameters.
6. Thrust blocks shall be cast against firm, undisturbed earth, as approved by the City Engineer.
7. Thrust blocks must be inspected by the City prior to backfill.
8. Thrust blocks for vertical up bends shall correspond to the requirements of horizontal bends.

REVISIONS

DATE	DESCRIPTION

SIGNED AND DATED

PROFESSIONAL ENGINEER REGISTERED 8832 5-19-14 STATE OF IDAHO KEVIN LILLY

DRAFTED BY: RKC/KWK

CHECKED BY: K.Lilly

DRAWING SCALE: N.T.S.

DATE: 2-6-2012

WATER MAIN THRUST BLOCKING

CITY OF MOSCOW
ENGINEERING DEPARTMENT

DRAWING NUMBER: 31

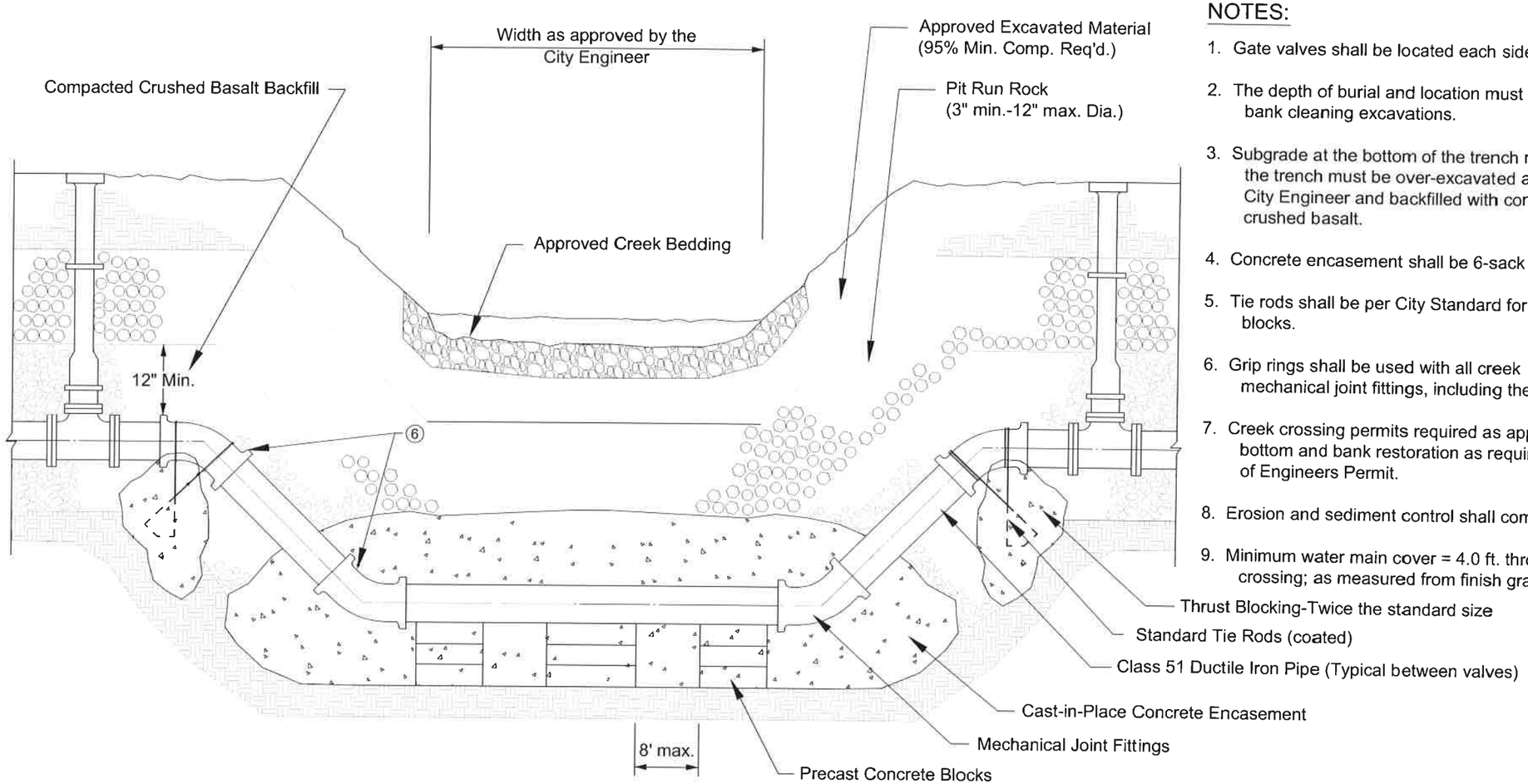

TRANSVERSE SECTION

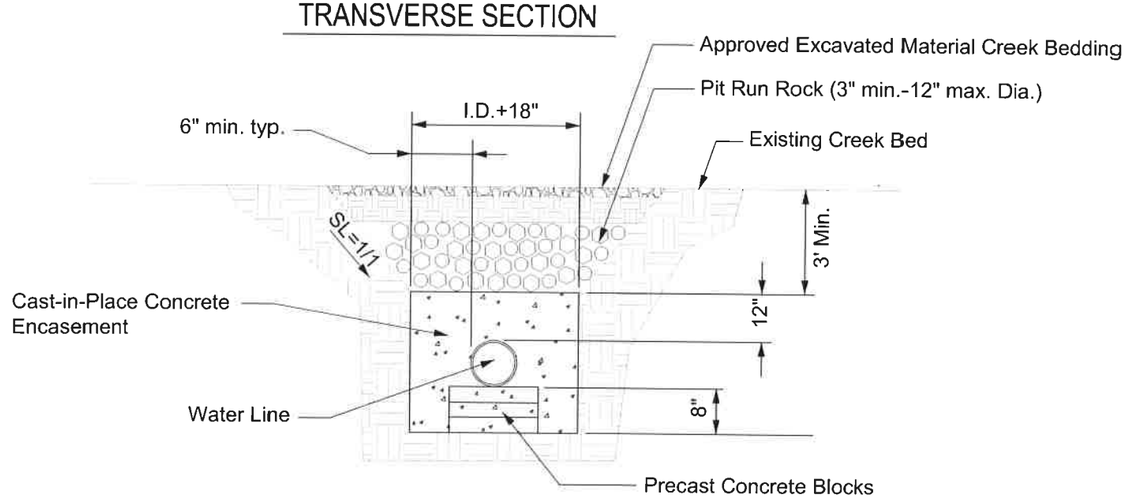

LONGITUDINAL SECTION

NOTES:

1. Gate valves shall be located each side of the crossing.
2. The depth of burial and location must provide for creek bank cleaning excavations.
3. Subgrade at the bottom of the trench must be firm. If not, the trench must be over-excavated as directed by the City Engineer and backfilled with compacted 3/4"(-) crushed basalt.
4. Concrete encasement shall be 6-sack City Standard.
5. Tie rods shall be per City Standard for vertical thrust blocks.
6. Grip rings shall be used with all creek crossing mechanical joint fittings, including the gate valves.
7. Creek crossing permits required as applicable. Creek bottom and bank restoration as required by Army Corps of Engineers Permit.
8. Erosion and sediment control shall comply with City Code.
9. Minimum water main cover = 4.0 ft. throughout the crossing; as measured from finish grade to top of pipe.

REVISIONS	
DATE	DESCRIPTION

SIGNED AND DATED

PROFESSIONAL ENGINEER REGISTERED 8832 STATE OF IDAHO KEVIN LILLY 5-19-14

DRAFTED BY: MAS/KWK

CHECKED BY: K.Lilly

DRAWING SCALE: NTS

DATE: 3-5-2014

WATER MAIN CREEK CROSSING

CITY OF MOSCOW
ENGINEERING DEPARTMENT

DRAWING NUMBER: 32

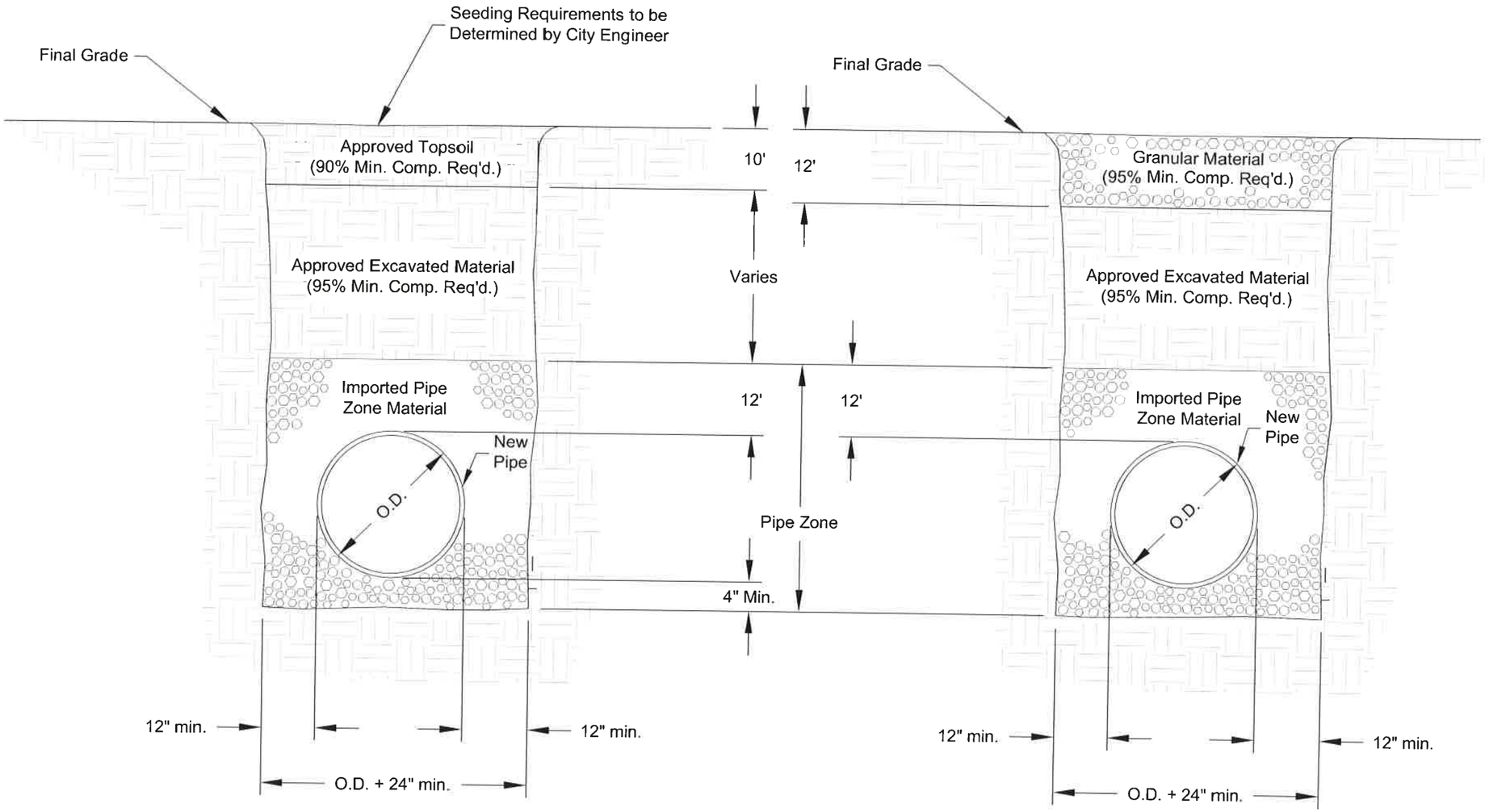

BACKFILL CLASS A
TYPICAL SECTION

BACKFILL CLASS B
TYPICAL SECTION

NOTES:

1. Class 'A' Backfill shall be used in areas where there is to be re-vegetation and some trench settlement may be tolerated.
2. Class 'B' Backfill may not be constructed within the public right-of-way and has limited application - refer to the City's Standard Construction Specifications.
3. Contractor shall comply with the most current OSHA requirements for excavations.
4. Backfill shall comply with the requirements of the City's Standard Construction Specifications.

REVISIONS	
DATE	DESCRIPTION

SIGNED AND DATED

PROFESSIONAL ENGINEER REGISTERED 8832 5-15-14 STATE OF IDAHO KEVIN LILLY

DRAFTED BY: K.Kipp/C.Edwards
CHECKED BY: K.Lilly
DRAWING SCALE: NTS
DATE: 3-5-2014

BACKFILL CLASS A & B

CITY OF MOSCOW
ENGINEERING DEPARTMENT

DRAWING NUMBER: 33a

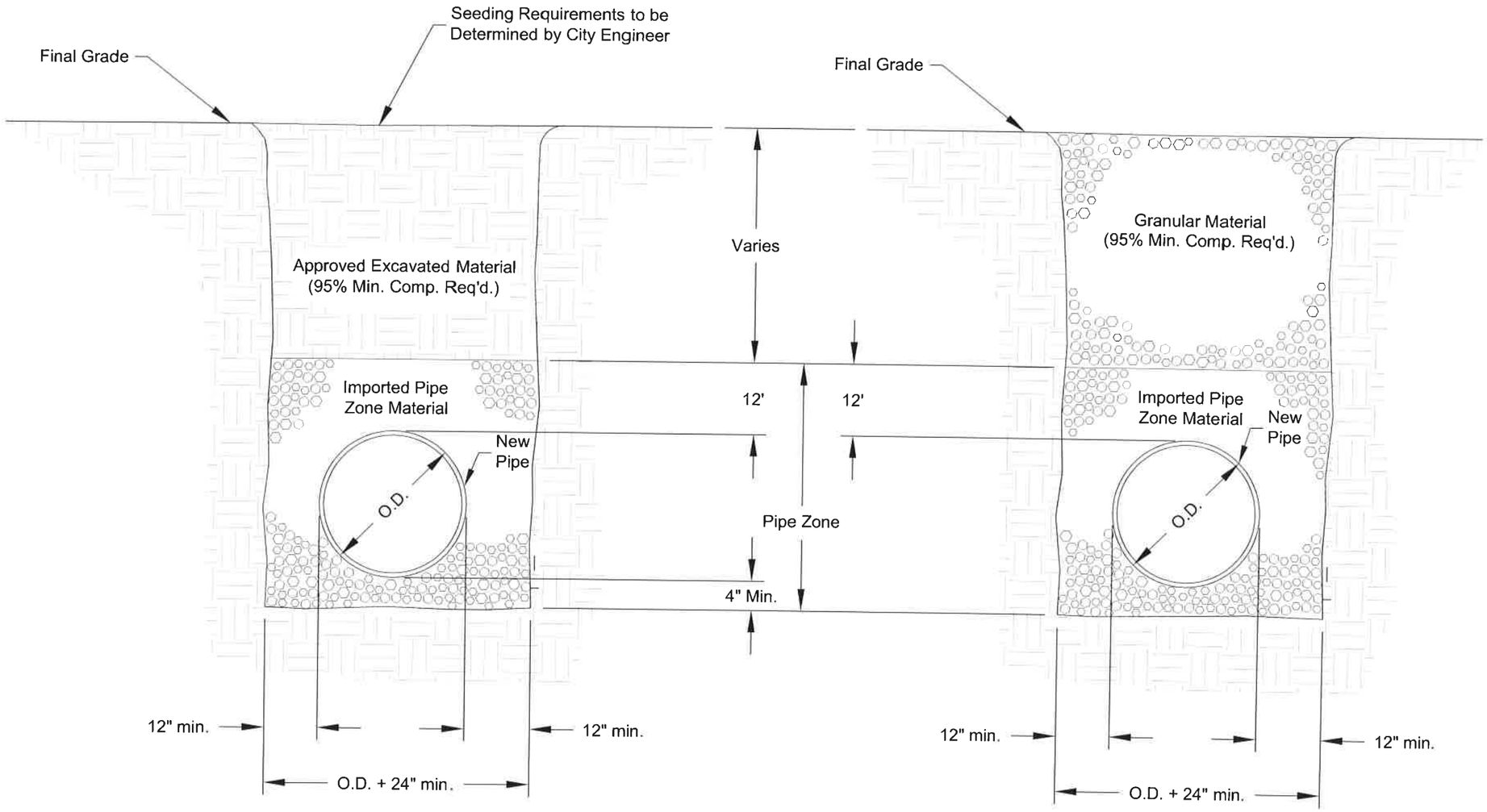

BACKFILL CLASS C
TYPICAL SECTION

BACKFILL CLASS D
TYPICAL SECTION

NOTES:

1. Class 'C' Backfill shall be used in areas where asphalt pavement, concrete curb, sidewalk, driveway, or gravel surfacing is not anticipated and where topsoil is not required.

2. Class 'D' Backfill is for areas where asphalt pavement, concrete, curb, sidewalk, or gravel surfacing is existing or anticipated.

3. Contractor shall comply with the most current OSHA requirements for excavations.

4. Backfill shall comply with the requirements of the City's Standard Construction Specifications.

REVISIONS	
DATE	DESCRIPTION

SIGNED AND DATED

PROFESSIONAL ENGINEER REGISTERED 8832 STATE OF IDAHO KEVIN LILLY 5-14-14

DRAFTED BY: K.Kipp/C.Edwards
CHECKED BY: K.Lilly
DRAWING SCALE: NTS
DATE: 3-5-2014

BACKFILL CLASS C & D

CITY OF MOSCOW
ENGINEERING DEPARTMENT

DRAWING NUMBER: 33b

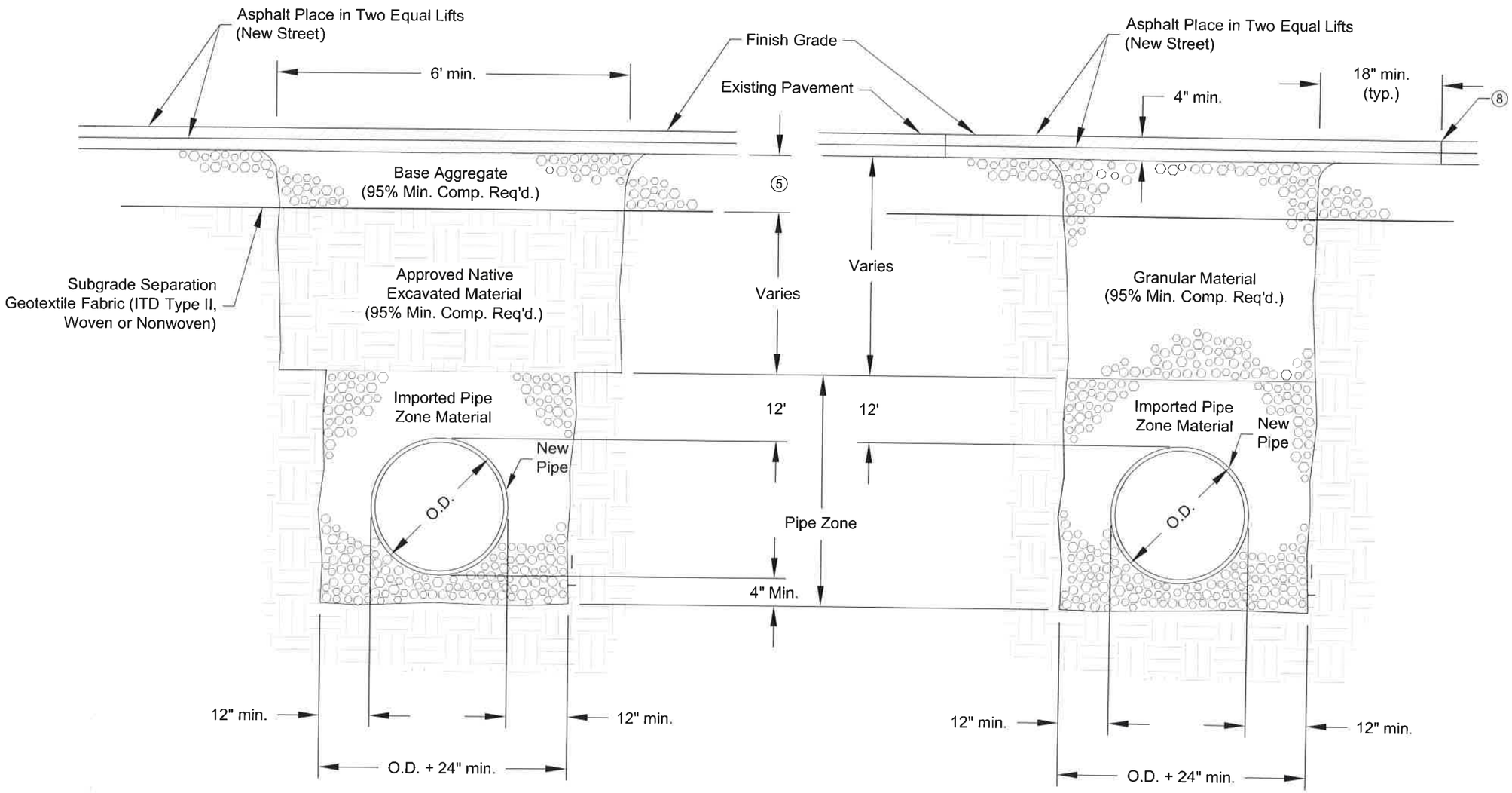

BACKFILL CLASS E
TYPICAL SECTION

BACKFILL CLASS F
TYPICAL SECTION

NOTES:

1. Class 'E' Backfill may be substituted for Class 'D' Backfill within new streets only (not existing streets) if specifically allowed by the City Engineer.

2. Class 'F' Backfill shall be utilized in trenches within existing pavement.

3. Compaction for all trench backfill above the pipe zone shall be 95% minimum of AASHTO T99. All native backfill material shall be placed in six inch (6") maximum lifts and wide sheepsfoot roller. Density testing frequency for native backfill will be in excess of that required for the Class 'D' crushed aggregate backfill.

4. Backfill around manholes and catch basins shall be all crushed aggregate; native material backfill will not be allowed.

5. Base aggregate depth and type to be the same as that required for the street section where this trench backfill is utilized.

6. All trenches excavated within existing paved streets shall be backfilled and surfaced the same day with a two inch (2") thick compacted cold mix asphalt patch (smooth) - to be replaced with the City's standard four inch (4") hot mix asphalt surfacing as soon as scheduling allows; unless specifically approved otherwise by the City Engineer.

7. The new asphalt patch shall match the existing pavement grade. Across the width of the trench, the new surface shall not exceed 0.25 inches out-of-level.

8. Existing pavement shall be cut full depth and in continuous, straight lines. Broken edges will not be allowed. Pavement cuts shall be 'tacked' immediately prior to installation of the hot mix patch.

9. Contractor shall comply with the most current OSHA requirements for excavations.

10. Backfill shall comply with the requirements of the City's Standard Construction Specifications.

REVISIONS	
DATE	DESCRIPTION

SIGNED AND DATED

PROFESSIONAL ENGINEER REGISTERED 8832 5-19-14 STATE OF IDAHO KEVIN LILLY

DRAFTED BY: K.Kipp/C.Edwards

CHECKED BY: K.Lilly

DRAWING SCALE: NTS

DATE: 3-5-2014

BACKFILL CLASS E & F

CITY OF MOSCOW
ENGINEERING DEPARTMENT

DRAWING NUMBER:
33c

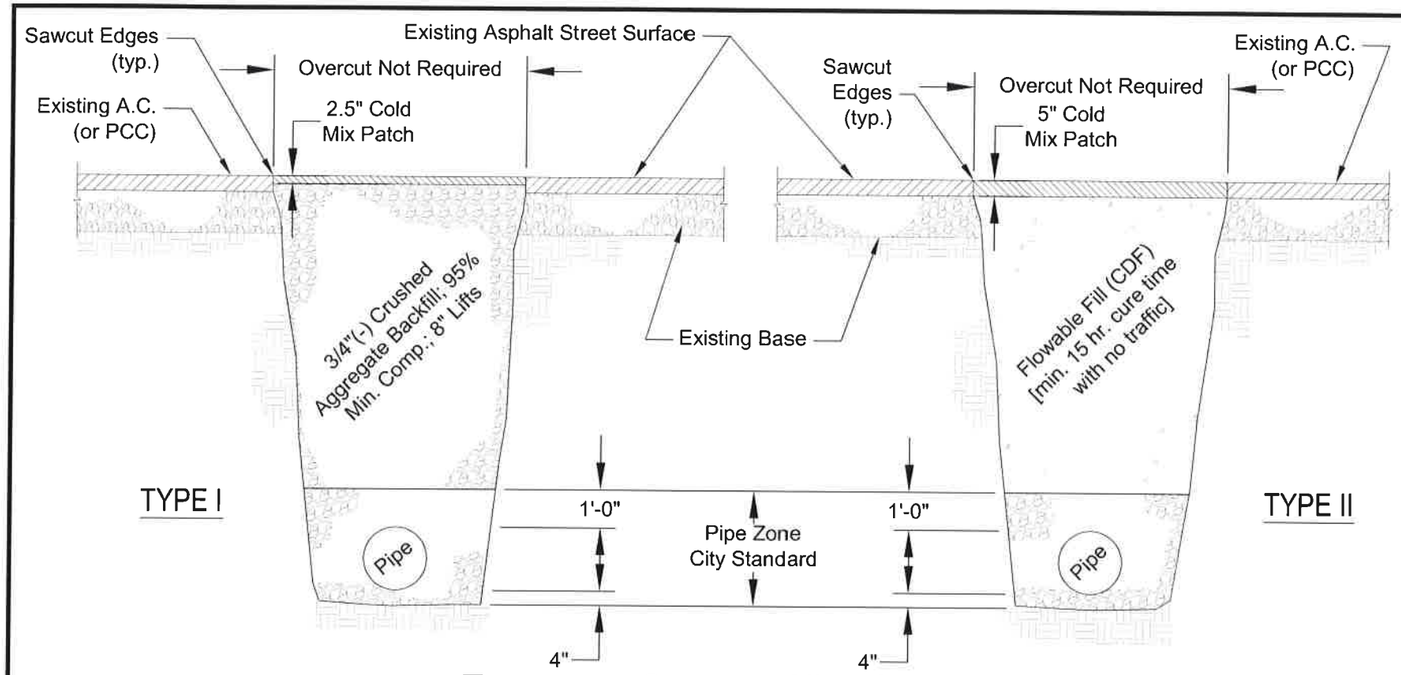

Temporary Street or Alley Cut Repair
[Step One - Temp.]

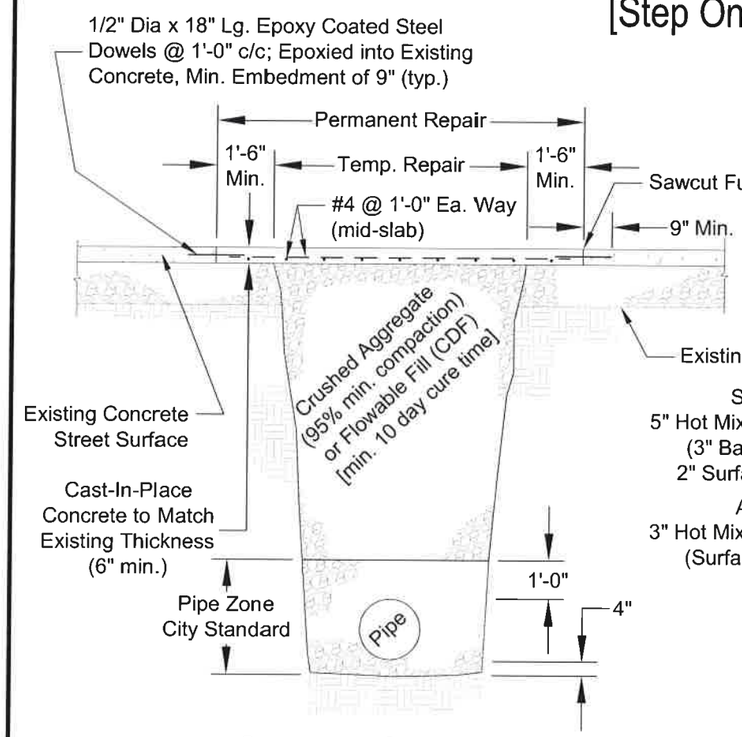

Concrete Cut Repair
[Step Two - Permanent]

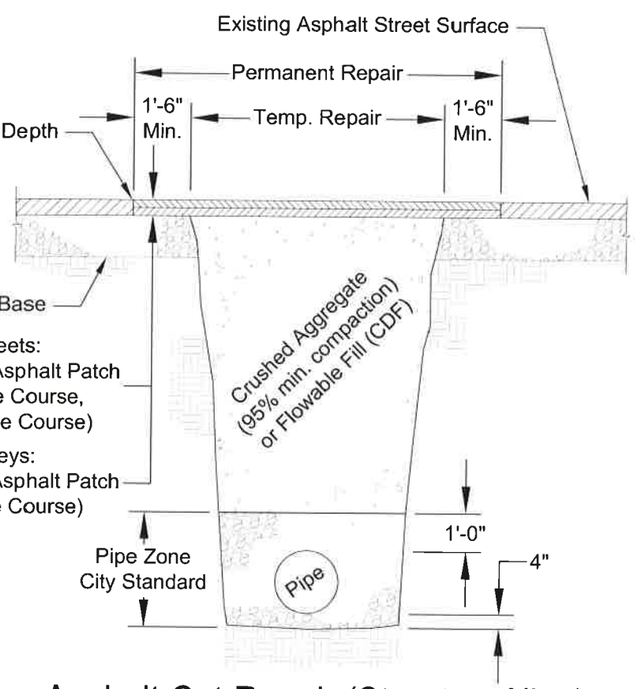

Asphalt Cut Repair (Street or Alley)
[Step Two - Permanent]

NOTES:

1. All excavations made within public right-of-way and easements require excavation permits from the City prior to commencing work. Street closure permits are required as applicable.
2. See City of Moscow Standard Construction Specifications for additional requirements regarding street and alley cut repair.
3. Prior to commencing, contractor shall furnish, install and maintain traffic control in accordance with the Manual on Uniform Traffic Control Devices (MUTCD) and as allowed and approved by the City Engineer.
4. Street cuts within Idaho Highway Right-of-Way require an Idaho Transportation Department (ITD) permit and are subject to ITD permit conditions (i.e. backfilling, surfacing requirements and traffic control).
5. The pavement removal required to perform the initial excavation shall be the width of the excavation opening and is not to include the removal of the pavement of the width required to construct the permanent patch. All pavement cuts shall be sawcut in neat, straight lines, as allowed and approved by the City. The limits of the pavement cut for the permanent patch shall be as described in the Standard Construction Specifications.
6. Moscow Public Works Department shall be notified prior to beginning backfilling operations. Noncompliance with this provision shall require re-excavation and witnessed compaction.
7. ALL STREET AND ALLEY CUTS IN EXISTING ASPHALT PAVEMENT SHALL BE BACKFILLED AND TEMPORARILY PATCHED AT THE END OF EACH DAY - unless specifically allowed otherwise by the City Engineer. Properly applied steel plates may be utilized in lieu of this requirement if allowed by the City.
8. Temporary street surfacing (cold mix asphalt or flowable fill) shall be placed (and maintained) uniformly smooth across the width and length of the patch and shall match the existing, adjoining street grade. The finished surface of the temporary patch shall be level with, or no greater than 0.25 inches above the adjacent roadway surface.
9. Temporary street surface repair maintenance is the responsibility of the contractor.
10. The contractor making the cut shall be responsible for any future settling of the street cut for a period of one year from the date that temporary patch is completed.

REVISIONS	
DATE	DESCRIPTION

SIGNED AND DATED

PROFESSIONAL ENGINEER REGISTERED 8832 STATE OF IDAHO KEVIN LILLY 3-9-14

DRAFTED BY: C.Edwards	CHECKED BY: K.Lilly
DRAWING SCALE: NTS	DATE: 3-5-2014

STREET / ALLEY CUT REPAIR

CITY OF MOSCOW
ENGINEERING DEPARTMENT

DRAWING NUMBER: 34

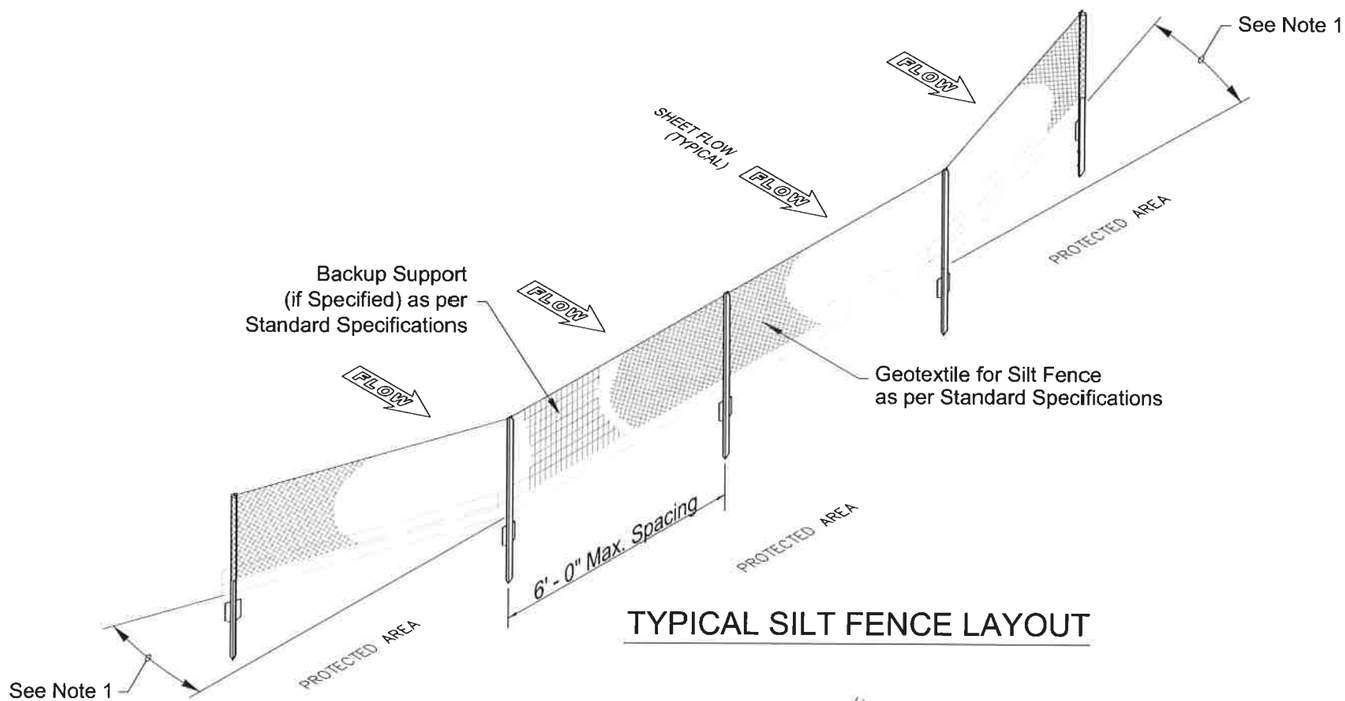

TYPICAL SILT FENCE LAYOUT

NOTES:

1. Install ends of silt fence slightly up slope to prevent sediment from flowing past ends of fence. See Typical Silt Fence Layout.
2. Overlap vertical silt fence splices eight inches (8") minimum and construct in a manner to prevent silt laden runoff from passing between posts. Avoid placing splices at sumps and other low points.
3. Do not install silt fence in a manner that it will act as a dam across permanent flowing watercourses. Silt fences are to be used at upland locations and turbidity barriers used at permanent bodies of water.
4. If backup support is specified, attach fabric to backup support in a manner to hold fabric securely and reduce the potential of tearing.
5. During excavation, minimize ground disturbance around anchor trench and smooth surface to prevent concentrated flows. Compact backfill in trench in a manner that will prevent underflow.

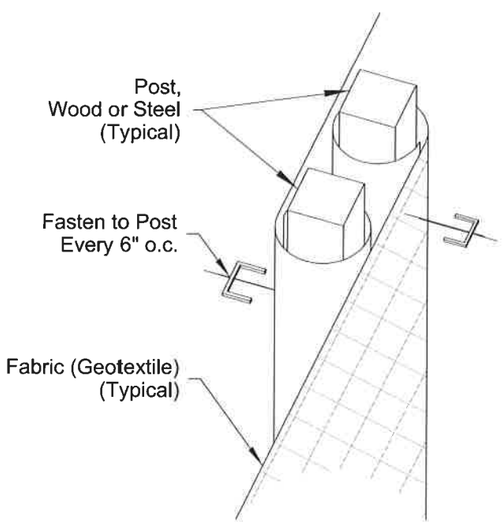

SPLICE DETAIL

(WOOD POSTS AND NO BACKUP SUPPORT SHOWN)

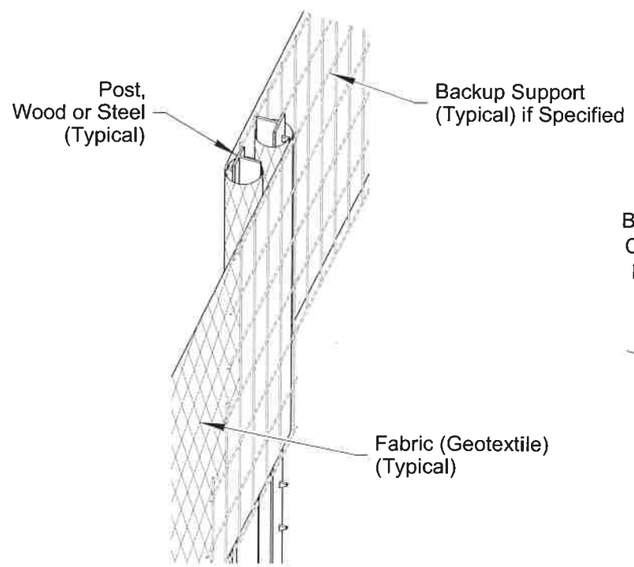

SPLICE DETAIL

(STEEL POSTS AND BACKUP SUPPORT SHOWN)

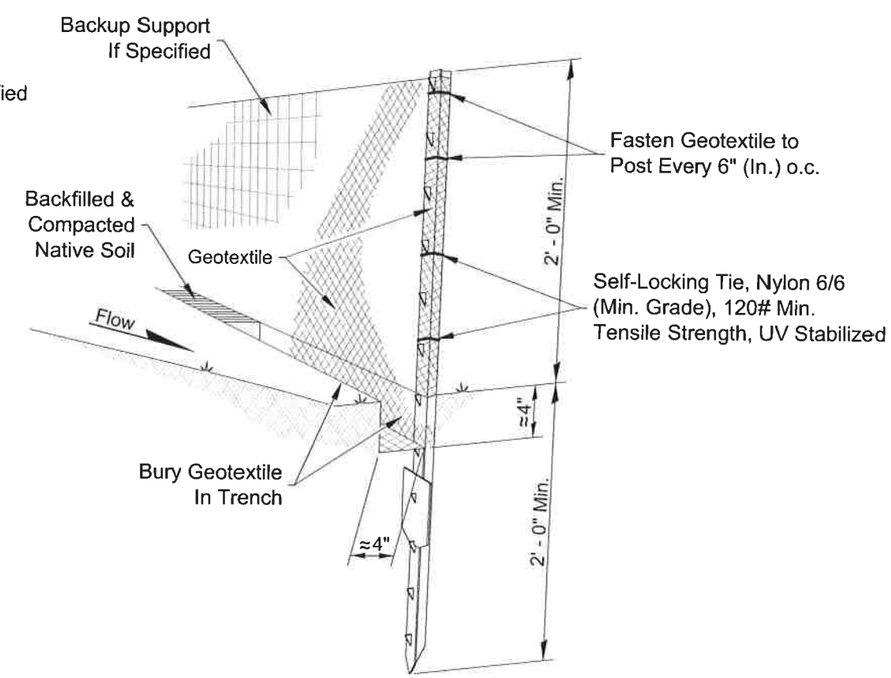

TYPICAL INSTALLATION DETAIL

REVISIONS	
DATE	DESCRIPTION

SIGNED AND DATED

PROFESSIONAL ENGINEER REGISTERED 8832 STATE OF IDAHO KEVIN LILLY 3-5-14

DRAFTED BY: C.Edwards

CHECKED BY: K.Lilly

DRAWING SCALE: NTS

DATE: 3-5-2014

SILT FENCE

CITY OF MOSCOW
ENGINEERING DEPARTMENT

DRAWING NUMBER: 35

NOTES:

1. The size and shape of the silt trap sack to fit the storm structure it will service (rectangular or round).
2. The silt trap sack shall have a built-in high-flow relief system (overflow bypass).
3. The silt trap sack assembly must allow removal without spilling the collected material.
4. Empty silt trap sack and dispose of sediment and debris before the sack is half-full.
5. Ensure the silt trap sack assembly does not spill or fall into the storm structure. If sediment is spilled into the storm structure, remove the spilled material by suction hose or other approved method.
6. Construction entrances should be inspected regularly for signs of thinning areas where mud begins to show through. Add gravel periodically to maintain the integrity of the pad.

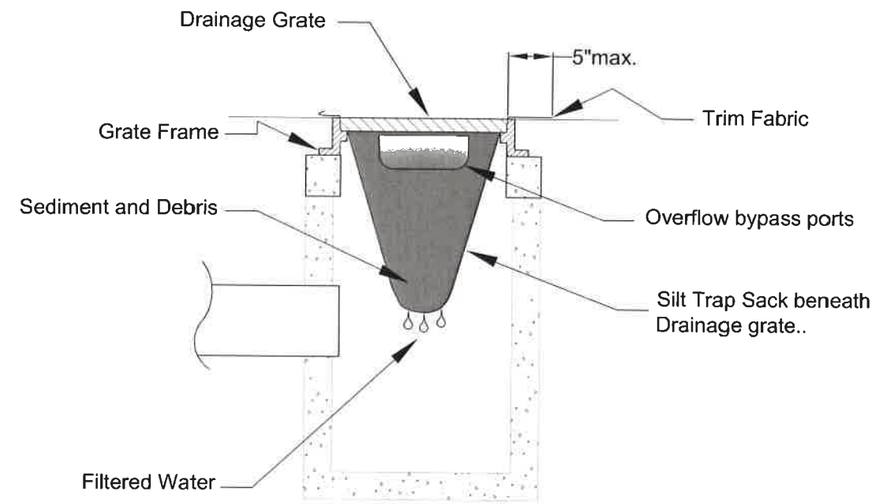

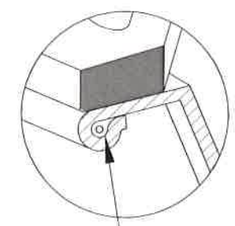

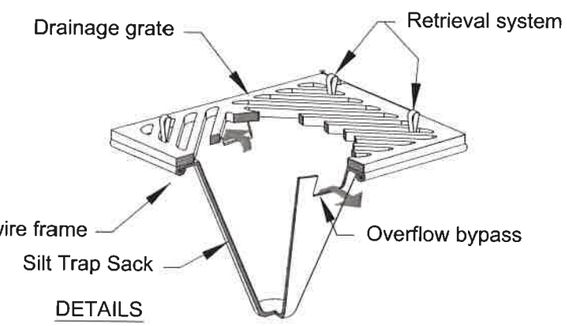

DETAILS

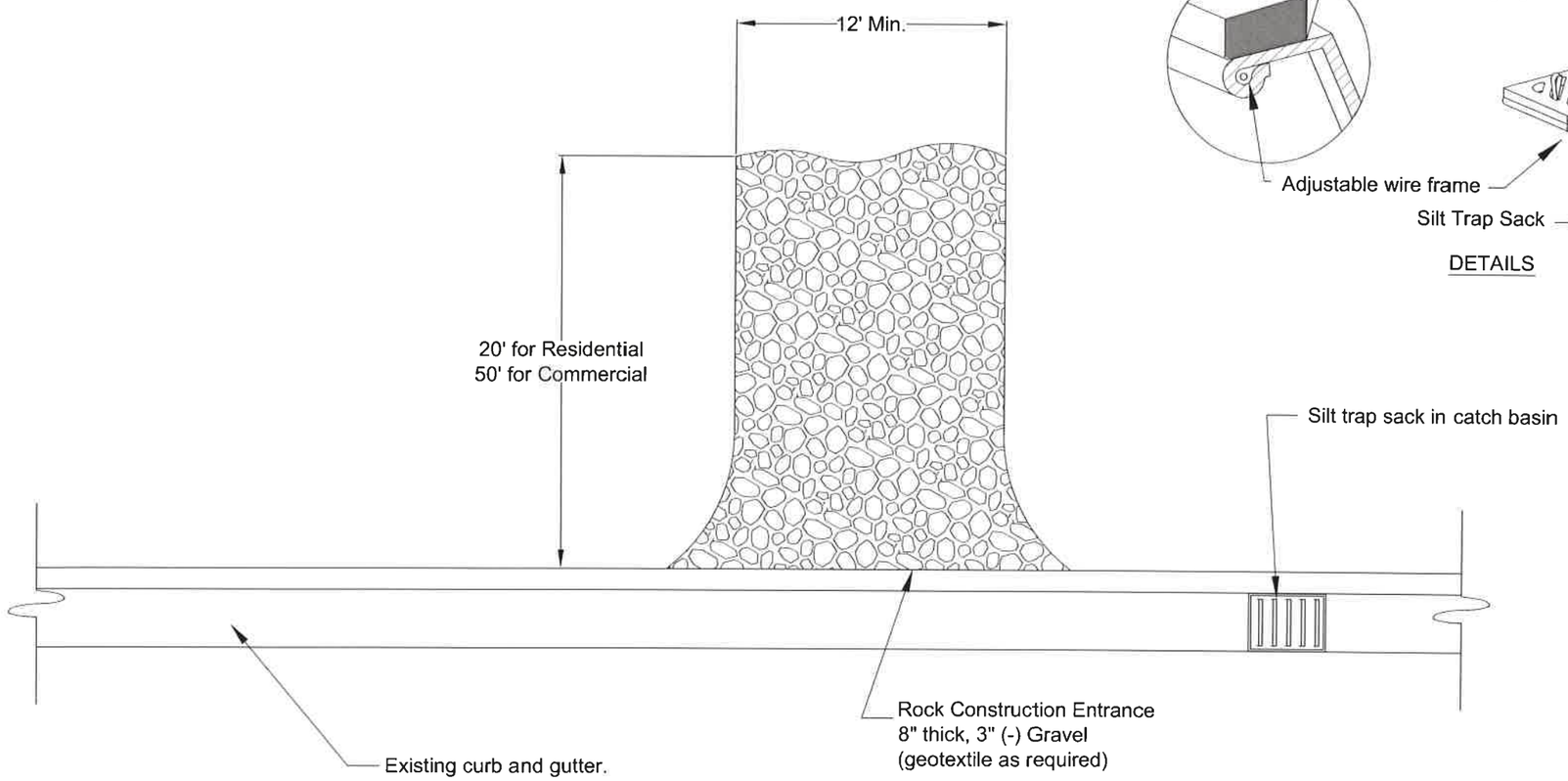

REVISIONS	
DATE	DESCRIPTION

SIGNED AND DATED

PROFESSIONAL ENGINEER REGISTERED 8832 5-19-14 STATE OF IDAHO KEVIN LILLY

DRAFTED BY: C.Edwards

CHECKED BY: K.Lilly

DRAWING SCALE: NTS

DATE: 3-5-2014

CONSTRUCTION ENTRANCE & INLET PROTECTION

CITY OF MOSCOW
ENGINEERING DEPARTMENT

DRAWING NUMBER: 36

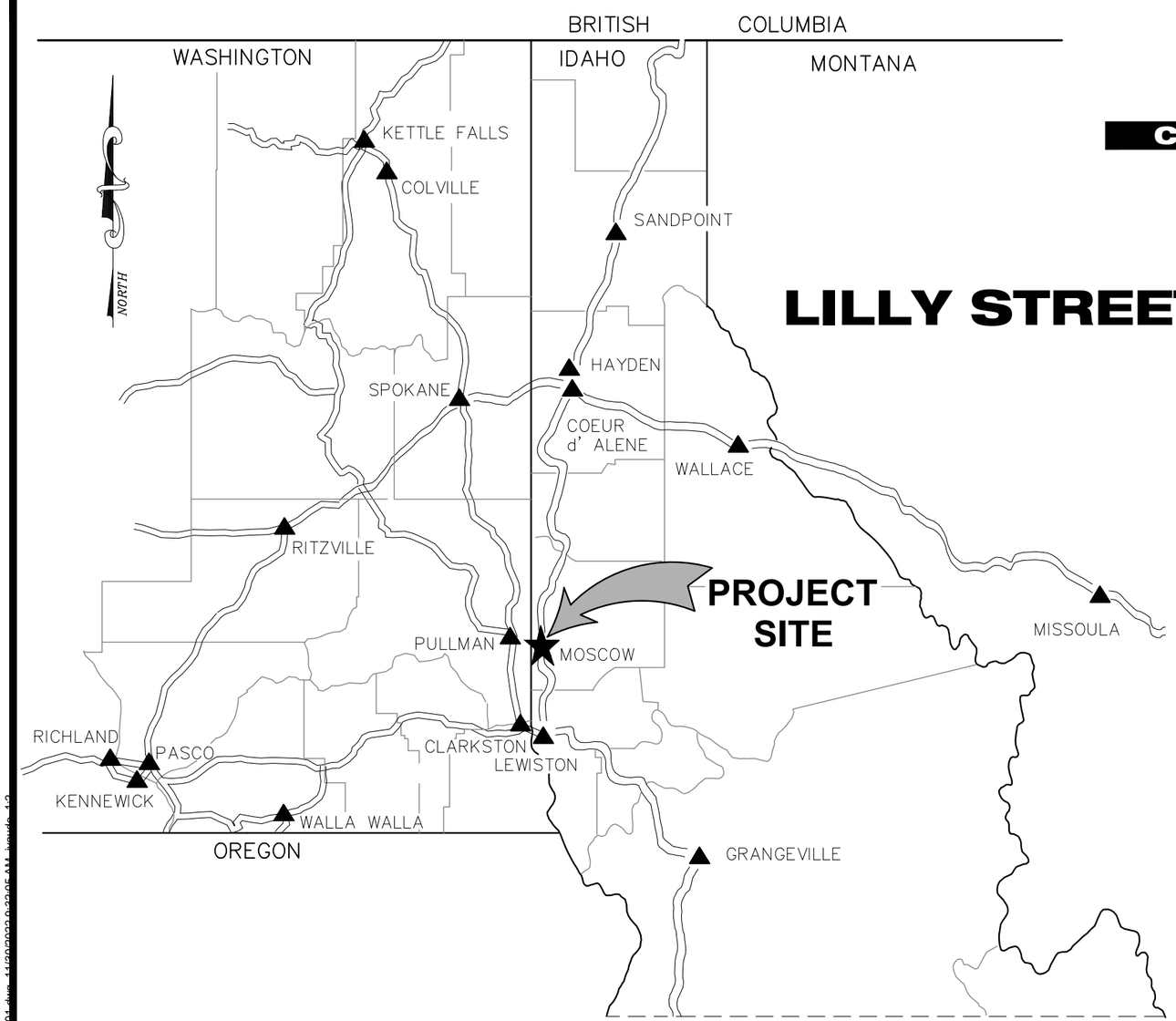

CONSTRUCTION DRAWINGS

City of Moscow,
Latah County, Idaho

LILLY STREET RECONSTRUCTION 'A' ST. TO THIRD ST.

Project No. 46016.010
City of Moscow Project No. 108–019

November 2022

PROFESSIONAL ENGINEER
LICENSED
15695
STATE OF IDAHO
ADAM J DORSEY

11/30/22

QAQC PLAN REVIEW		
	REVIEWED BY	DATE
ENGINEERING	MRG	01–26–22
SURVEY	MLH	01–26–22

WELCH-COMER
ENGINEERS | SURVEYORS

www.welchcomer.com
208–664–9382
877–815–5672 (toll free)
208–664–5946 (fax)
330 E. Lakeside Ave, Suite 101
Coeur d'Alene, ID 83814

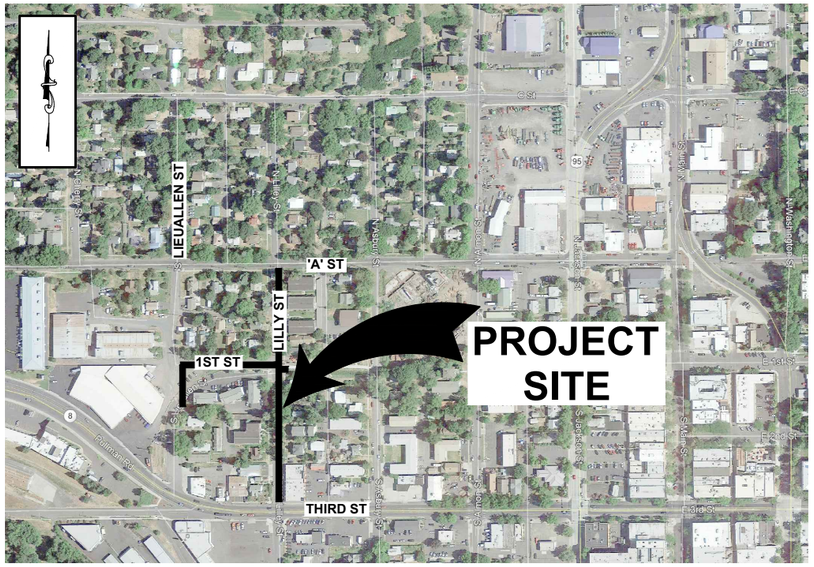

VICINITY MAP

Sheet List Table

Sheet Number	Sheet Title
A1	COVERSHEET
A2	SHEET INDEX, VICINITY MAP AND DATUM
A3	GENERAL PROJECT NOTES
A4	LEGEND AND ABBREVIATIONS
A5	TYPICAL SECTIONS
A6	TYPICAL SECTIONS
DEMO1	DEMOLITION PLAN
DEMO2	DEMOLITION PLAN
C0	PROJECT OVERVIEW
C1	PLAN AND PROFILE
C2	PLAN AND PROFILE
C3	PLAN AND PROFILE
C4	PLAN AND PROFILE
C5	PLAN AND PROFILE
C6	PLAN AND PROFILE
C7	INTERSECTION PLAN
C8	INTERSECTION PLAN
C9	INTERSECTION PLAN
C10	INTERSECTION PLAN
S1	SANITARY & STORM SEWER PLAN
S2	SANITARY & STORM SEWER PLAN
S3	SANITARY & STORM SEWER PLAN
S4	SANITARY & STORM SEWER PLAN
S5	SANITARY & STORM SEWER PLAN
W1	WATER PLAN
W2	WATER PLAN

Sheet List Table

Sheet Number	Sheet Title
W3	WATER PLAN
W4	WATER PLAN
W5	WATER PLAN
DT1	DETAILS
DT2	DETAILS
DT3	DETAILS
DT4	DETAILS
DT5	DETAILS
DT6	DETAILS
DT7	DETAILS
DT8	DETAILS
DT9	DETAILS
EC1	TEMPORARY EROSION AND SEDIMENT CONTROL PLAN
EC2	TEMPORARY EROSION AND SEDIMENT CONTROL PLAN
TC1	TRAFFIC CONTROL PLAN
TC2	TRAFFIC CONTROL PLAN
RC1	HOG CREEK PLAN & PROFILE
RC2	HOG CREEK CROSS SECTIONS
RC3	REVEGETATION PLAN
RC4	SOCK DRAIN DETAILS

HORIZONTAL AND VERTICAL DATUM:

HORIZONTAL DATUM: NAD 83/11 AT GROUND WITH A GRID SCALE FACTOR OF 0.999931325

VERTICAL DATUM: NGVD29

PROJECT CONTROL POINTS

510	1849654.93	2309693.52	2562.17	NAIL
511	1850049.31	2309621.10	2574.78	PK
512	1849456.82	2309685.44	2562.57	NAIL
513	1849252.81	2309743.40	2562.18	PK
516	1849774.31	2309394.69	2564.28	NAIL
517	1849571.76	2309396.77	2560.67	NAIL
518	1849460.30	2309355.42	2560.03	NAIL
520	1849699.48	2309611.16	2562.51	PK

COPYRIGHT 2022
Welch~Comer & Associates, Inc.
This document, and ideas and designs incorporated herein, as an instrument of professional service, is the property of Welch~Comer & Associates, Inc., and is not to be used in whole or in part for any other project without the written authorization of Welch~Comer & Associates, Inc.

PROFESSIONAL ENGINEER LICENSED 15695 STATE OF IDAHO ADAM J DORSEY

11/30/22

WELCH-COMER ENGINEERS | SURVEYORS
www.welchcomer.com
330 E. Lakeside Ave, Suite 101
Coeur d'Alene, ID 83814
208-664-9382
(toll free) 877-815-5672
(fax) 208-664-5946

NO.	DATE	REVISION DESCRIPTION	BY

CITY OF MOSCOW
LILLY ST. RECONSTRUCTION
'A' ST. TO THIRD ST.

SHEET INDEX, VICINITY MAP AND DATUM

PROJ NO: 46016.01
DESIGNED BY: AJD
DRAWN BY: TJF/ JAL
CHECKED BY: AJD
DWG NAME: 46016.01CS01.DWG
DATE: 11-21-2022
SHEET NO:
A2

GENERAL PROJECT NOTES

1. **UNLESS OTHERWISE NOTED CONTRACTOR SHALL PRESERVE AND PROTECT EXISTING UTILITY MAINS TO BE REPLACED UNTIL THE NEW MAIN HAS BEEN SUCCESSFULLY TESTED AND PUT INTO SERVICE.**

2. **ALL EXISTING UTILITIES SHOWN ON THESE PLANS ARE BASED ON BEST AVAILABLE INFORMATION, AND ARE FOR REFERENCE ONLY. ACTUAL LOCATION AND ELEVATION OF EXISTING STORM, SANITARY SEWER AND WATER LINES ARE UNKNOWN. CONTRACTOR SHALL VERIFY INVERTS AT CONNECTIONS TO EXISTING SEWER LINES PRIOR TO ORDERING MANHOLES. CONTRACTOR SHALL CONTACT THE APPROPRIATE UTILITY FOR ACTUAL FIELD LOCATIONS PRIOR TO CONSTRUCTION. CONTRACTOR SHALL VERIFY ALL EXISTING PIPE INVERT ELEVATIONS AND PIPE DEPTHS AT CROSSINGS AND CONNECTIONS PRIOR TO CONSTRUCTION.**
   CALL BEFORE YOU DIG - UTILITY ONE CALL NUMBER 811

UNDERGROUND SERVICE ALERT
ONE-CALL NUMBER
811
CALL TWO BUSINESS DAYS BEFORE YOU DIG

3. DURING THE PREPARATION OF THE CONSTRUCTION DRAWINGS, REVIEW OF AVAILABLE RECORDS AND A FIELD SEARCH WAS CONDUCTED UNDER THE DIRECTION OF A PROFESSIONAL LAND SURVEYOR TO LOCATE EXISTING SURVEY MONUMENTS WITHIN AND ADJACENT TO THE PROJECT CONSTRUCTION LIMITS IN ACCORDANCE WITH IDAHO CODE 55–1613. EXISTING SURVEY MONUMENTS ARE IDENTIFIED WITHIN THE PLANS. MONUMENTS IDENTIFIED AS 'OWNER TO REPLACE' WILL BE REPLACED AT THE EXPENSE OF THE OWNER. ALL OTHER MONUMENTS ARE INTENDED TO BE PRESERVED AND IF DESTROYED THE REPLACEMENT OF SAID MONUMENTS IS THE RESPONSIBILITY OF THE CONTRACTOR, REF (IC 55–1613). IF MONUMENTS ARE REPLACED BY THE CONTRACTOR THE ENGINEER AND OWNER WILL BE NOTIFIED BY THE CONTRACTOR UPON RE–ESTABLISHMENT OF THE MONUMENTS.

4. CONTRACTOR SHALL HAVE A SET OF CONSTRUCTION DRAWINGS ON THE PROJECT SITE AT ALL TIMES WHEN UTILITY INSTALLATIONS ARE BEING PERFORMED.

5. CONTRACTOR SHALL ENSURE ALL SITE CONTROL AND TRAFFIC CONTROL MEASURES ARE INSTALLED AND APPROVED BY ENGINEER PRIOR TO BREAKING GROUND, UNLESS OTHERWISE NOTED.

6. UNLESS OTHERWISE NOTED, CONTRACTOR SHALL PRESERVE AND PROTECT ALL EXISTING UTILITIES, IRRIGATION SYSTEMS AND SURFACE FEATURES WITHIN THE CONSTRUCTION LIMITS. ANY DAMAGE RESULTING FROM CONSTRUCTION SHALL BE REPAIRED AT THE SOLE EXPENSE OF THE CONTRACTOR.

7. UNLESS OTHERWISE NOTED, NEW WATER MAIN SHALL BE LAID TO PROVIDE A MINIMUM OF 4.5 FEET OF COVER AND MAXIMUM OF 7 FEET OF COVER BELOW FINISHED SURFACE.

8. UNLESS OTHERWISE APPROVED BY THE CITY, THERE SHALL BE NO CONNECTION BETWEEN ANY NEW WATER LINE INSTALLATION AND THE EXISTING WATER SYSTEM UNTIL ALL STERILIZATION, FLUSHING, BACTERIOLOGICAL TESTING AND PRESSURE TESTING HAVE BEEN COMPLETED TO THE SATISFACTION OF THE CITY.

10. RIGHT–OF–WAY LINES OR RIGHT OF ENTRY AGREEMENTS (WHERE APPLICABLE) SHALL BE CONSIDERED CONSTRUCTION LIMITS THROUGHOUT. CITY SHALL OBTAIN RIGHT OF ENTRY AGREEMENTS AS REQUIRED FOR ALL WORK OUTSIDE EXISTING RIGHTS–OF–WAY. CONTRACTOR SHALL OBTAIN A WRITTEN COPY OF TEMPORARY CONSTRUCTION EASEMENT FROM CITY PRIOR TO ENTERING OR DISTURBING PRIVATE PROPERTY.

11. DEFLECTION AT PIPE JOINTS SHALL NOT EXCEED THE MANUFACTURER'S RECOMMENDATIONS. ABSOLUTELY NO DEFLECTION SHALL BE ACHIEVED BY HORIZONTAL OR VERTICAL DEFLECTION OF THE PIPE BODY.

12. UNLESS OTHERWISE NOTED CONTRACTOR SHALL PRESERVE AND PROTECT EXISTING LANDSCAPING, RETAINING WALLS AND DRIVEWAYS THROUGHOUT PROJECT. ALL WORK SHALL BE COMPLETED WITHIN THE RIGHT–OF–WAY OR WITHIN RIGHT OF ENTRY AGREEMENTS, AS APPLICABLE. CONTRACTOR SHALL PRESERVE AND PROTECT ALL EXISTING TREES UNLESS OTHERWISE NOTED OR PRE–APPROVED BY ENGINEER.

13. CONTRACTOR SHALL FIELD LOCATE EXISTING WATER SERVICES TO BE RECONNECTED AND SHALL VERIFY SIZE, MATERIAL AND ELEVATION PRIOR TO CONNECTION.

14. STORMWATER FACILITIES SHALL BE KEPT OPEN SO AS TO PERMIT THE FREE AND UNOBSTRUCTED FLOW OF WATER. ALL EARTHWORK OPERATIONS SHALL BE SCHEDULED SO AS NOT TO DISRUPT THE FLOW OF DRAINAGE. TEMPORARY DITCHES AND GRADING MAY BE REQUIRED TO MAINTAIN NORMAL DRAINAGE FLOWS.

15. ALL WATER LINE BENDS, TEES, REDUCERS AND VALVES SHALL HAVE THRUST BLOCKS AS SHOWN IN DETAILS. MECHANICAL RESTRAINTS SHALL BE INSTALLED ON ALL MJ FITTINGS IN ADDITION TO THRUST BLOCKS.

16. CONTRACTOR SHALL BE RESPONSIBLE FOR COORDINATING WITH THE APPROPRIATE UTILITY FOR HOLDING ALL POLES AS REQUIRED.

17. TRACER WIRE SHALL BE SUCCESSFULLY TESTED FOR CONTINUITY PRIOR TO FINAL SURFACE RESTORATION.

18. ANY HYDRANT, NEW OR EXISTING, MUST BE BAGGED IF IT IS NOT IN SERVICE.

19. CONTRACTOR SHALL CONFIRM ELEVATION AT PROPERTY LINE VIA EXPLORATORY EXCAVATION PRIOR TO UTILITY INSTALLATION.

20. ALL CONNECTIONS TO EXISTING MAINS WILL BE MADE WITH CITY OF MOSCOW PERSONNEL PRESENT. ALL FITTINGS TO BE SWABBED WITH CL2 SOLUTION (50 PPM).

21. CONTRACTOR SHALL BE RESPONSIBLE FOR RESTORING ALL DISTURBED AREAS OUTSIDE THE ROADWAY/SIDEWALK LIMITS TO PRE–CONSTRUCTION CONDITIONS. CONTRACTOR SHALL DOCUMENT PRE–CONSTRUCTION CONDITIONS WITH PHOTOGRAPHS PRIOR TO BEGINNING WORK AT THE SITE.

22. PRIOR TO BEGINNING UTILITY EXCAVATION, CONTRACTOR SHALL COORDINATE WITH CITY STAFF TO DEVELOP AN EMERGENCY SHUT–OFF PLAN IN THE EVENT OF A WATER LINE BREAK AT ANY POINT WITHIN THE PROJECT AREA. A PROTOCOL FOR ISOLATING THE BREAK SHALL BE ESTABLISHED WITH THE CITY.

23. CONTRACTOR SHALL MATCH EXISTING CONDITIONS OUTSIDE OF DEMOLITION LIMITS. EXISTING CONDITIONS MAY INCLUDE, BUT ARE NOT LIMITED TO WALLS, SLOPES, LANDSCAPING AND FENCING. COORDINATE WITH PROPERTY OWNERS AND ENGINEER PRIOR TO REMOVAL AND INSTALLATION OF SUCH ITEMS.

24. PEDESTRIAN RAMPS SHALL HAVE 6" OF CRUSHED AGGREGATE BASE TYPE I AND COMPACTED TO A MINIMUM OF 95% STANDARD PROCTOR DENSITY PER ASTM D–698 OR 92% MODIFIED PROCTOR DENSITY PER ASTM D1557.

25. ALL TRENCHES SHALL USE CITY OF MOSCOW TRENCH BACKFILL CLASS D. SEE CITY OF MOSCOW STANDARD DRAWING 33B. ALL LABOR, MATERIALS, AND EQUIPMENT REQUIRED ARE CONSIDERED INCIDENTAL TO EACH RESPECTIVE UTILITY PAY ITEM.

26. LOCATING WIRE IS REQUIRED FOR ALL STORM SEWER, SANITARY SEWER, AND WATER LINES AND MUST BE INSTALLED PER SECTION 2060 OF THE CONTRACT AMENDMENTS.

COPYRIGHT 2022
Welch–Comer & Associates, Inc.
This document, and ideas and designs incorporated herein, as an instrument of professional service, is the property of Welch–Comer & Associates, Inc., and is not to be used in whole or in part for any other project without the written authorization of Welch–Comer & Associates, Inc.

PROFESSIONAL ENGINEER
LICENSED
15695
STATE OF IDAHO
ADAM J DORSEY
11/30/22

WELCH-COMER
ENGINEERS | SURVEYORS
www.welchcomer.com
330 E. Lakeside Ave, Suite 101
Coeur d'Alene, ID 83814
208–664–9382
(toll free) 877–815–5672
(fax) 208–664–5946

NO.	DATE	REVISION DESCRIPTION	BY

CITY OF MOSCOW
LILLY ST. RECONSTRUCTION
'A' ST. TO THIRD ST.

GENERAL PROJECT NOTES

PROJ NO:	46016.01
DESIGNED BY:	AJD
DRAWN BY:	TJF/ JAL
CHECKED BY:	AJD
DWG NAME:	46016.01CS01.DWG
DATE:	11–29–2022
SHEET NO:	A3

LEGEND

- EXISTING SANITARY SEWER MANHOLE
- EXISTING SANITARY SEWER MANHOLE
- EXISTING ECCENTRIC SANITARY SEWER MANHOLE
- CO EXISTING CLEANOUT
- EXISTING AIR RELEASE VALVE
- EXISTING CATCH BASIN
- EXISTING DRYWELL
- EXISTING DRYWELL
- ST EXISTING STORM SEWER MANHOLE
- ST EXISTING STORM SEWER MANHOLE
- ST EXISTING ECCENTRIC STORM SEWER MANHOLE
- SPK EXISTING SPRINKLER HEAD
- EXISTING FIRE HYDRANT
- EXISTING WELL
- EXISTING YARD HYDRANT
- EXISTING WATER VALVE
- CS EXISTING CURB STOP
- WM EXISTING WATER METER
- PIV EXISTING POST INDICATOR VALVE
- EXISTING POWER POLE
- EXISTING GUY WIRE
- EXISTING LIGHT POLE
- PWR EXISTING POWER WARNING SIGN
- P EXISTING POWER VAULT
- TP EXISTING TELEPHONE PEDESTAL
- TVP EXISTING CABLE TV PEDESTAL
- JBX EXISTING JUNCTION BOX
- T EXISTING TELEPHONE VAULT
- TEL EXISTING TELEPHONE WARNING SIGN
- GM EXISTING GAS METER
- GV EXISTING GAS VALVE
- GR EXISTING GAS RISER
- GAS EXISTING GAS WARNING SIGN
- T EXISTING TELEPHONE MANHOLE
- T EXISTING TELEPHONE MANHOLE
- MBX EXISTING MAILBOX
- EXISTING SIGN
- ? EXISTING UNKNOWN
- EXISTING SHRUB
- EXISTING TREE
- EXISTING BUILDING
- WATER LEVEL

- PROPOSED SANITARY SEWER MANHOLE
- PROPOSED SANITARY SEWER MANHOLE
- PROPOSED ECCENTRIC SANITARY SEWER MANHOLE
- CO PROPOSED CLEANOUT
- PROPOSED AIR RELEASE VALVE
- PROPOSED DRYWELL
- PROPOSED CATCH BASIN
- PROPOSED CATCH BASIN
- PROPOSED INLET CATCH BASIN
- ST PROPOSED STORM SEWER MANHOLE
- ST PROPOSED STORM SEWER MANHOLE
- ST PROPOSED ECCENTRIC STORM SEWER MANHOLE
- PROPOSED WATER VALVE
- CS PROPOSED CURB STOP
- PROPOSED FIRE HYDRANT
- DS PROPOSED DOWN SPOUT
- PROPOSED YARD HYDRANT
- PROPOSED BLOW OFF ASSEMBLY
- WM PROPOSED SINGLE WATER METER SERVICE
- PROPOSED WELL
- PROPOSED REDUCER
- PROPOSED BENDS/FITTINGS
- IRRB PROPOSED IRRIGATION BOX
- GM PROPOSED GAS METER
- PROPOSED GAS VALVE
- JBX PROPOSED JUNCTION BOX
- PROPOSED GUY WIRE
- PROPOSED UTILITY POLE
- PROPOSED LIGHT
- PROPOSED LIGHT
- TP PROPOSED TELEPHONE PEDESTAL
- TVP PROPOSED TV PEDESTAL
- PROPOSED SIGN
- MBX PROPOSED MAILBOX
- OWNERSHIP DELINEATION
- 1% 5:1 DIRECTION AND SLOPE
- FOUND SURVEY MONUMENT
- SURVEY CONTROL MONUMENT
- TH# TEST HOLE
- 1 CD2 TYPICAL SECTION REFERENCE
- 1 CD2 DETAIL SHEET REFERENCE

- EXISTING EASEMENT
- RW EXISTING RIGHT-OF-WAY
- PL EXISTING PROPERTY LINE
- EXISTING FENCE
- EXISTING CURB
- EXISTING CURB AND GUTTER
- EXISTING DITCH
- EXISTING CENTERLINE OF ROAD
- EXISTING SHOULDER
- EXISTING EDGE OR GRAVEL OR DIRT
- EXISTING EDGE OF ASPHALT
- EXISTING CULVERT
- W EXISTING WATER LINE
- S EXISTING SANITARY SEWER LINE
- E S EXISTING SEWER STUB
- ST EXISTING STORM SEWER LINE
- BT EXISTING BURIED TELEPHONE LINE
- OT EXISTING OVERHEAD TELEPHONE LINE
- BP EXISTING BURIED POWER LINE
- P EXISTING POWER LINE
- OP EXISTING OVERHEAD POWER LINE
- G EXISTING GAS LINE
- BTV EXISTING BURIED CABLE TV LINE
- OTV EXISTING OVERHEAD CABLE TV LINE
- IRR EXISTING IRRIGATION LINE
- 2100 EXISTING 5' CONTOURS
- EXISTING 1' CONTOURS
- EXISTING TREE LINE
- EXISTING TOP OF BANK
- EXISTING TOE OF BANK
- PROPOSED EASEMENT
- RW PROPOSED RIGHT-OF-WAY
- PL PROPOSED PROPERTY LINE
- SECTION LINE
- PHASE BOUNDARIES
- X PROPOSED FENCE
- SX PROPOSED SILT FENCE
- PROPOSED CURB
- PROPOSED CURB AND GUTTER
- PROPOSED GRADE BREAK
- PROPOSED DITCH
- PROPOSED CENTERLINE OF ROAD
- PROPOSED SHOULDER
- PROPOSED EDGE OF ASPHALT
- PROPOSED CULVERT

- W PROPOSED WATER LINE
- S PROPOSED SANITARY SEWER LINE
- E S PROPOSED SEWER STUB
- ST PROPOSED STORM SEWER LINE
- BT PROPOSED BURIED TELEPHONE LINE
- OT PROPOSED OVERHEAD TELEPHONE LINE
- BP PROPOSED BURIED POWER LINE
- OP PROPOSED OVERHEAD POWER LINE
- G PROPOSED GAS LINE
- BTV PROPOSED BURIED CABLE TV LINE
- OT PROPOSED OVERHEAD CABLE TV LINE
- IRR PROPOSED IRRIGATION LINE
- PROPOSED SIDEWALK
- PROPOSED CURB DROP
- PROPOSED SIDEWALK UNDERDRAIN

ABBREVIATIONS

AC	ASPHALT CEMENT PAVEMENT
BOW	BOTTOM OF WALL
C1	CURVE DATA REFERENCE NUMBER
FG	FINISH GRADE ELEVATION
FL	FLOW LINE
FOC	FACE OF CURB
GIA	GRASSED INFILTRATION AREA
GRD BRK	GRADE BREAK
IE	INVERT ELEVATION
L1	LINE DATA REFERENCE NUMBER
L or LT	LEFT
PC	POINT OF CURVATURE
PT	POINT OF TANGENCY
ROW	RIGHT-OF-WAY
R or RT	RIGHT
SWR	SEWER
TA	TOP OF ASPHALT
TBC	TOP BACK OF CURB
TC	TOP CONCRETE
TFC	TOP FACE OF CURB
TOW	TOP OF WALL
WTR	WATER
XING	CROSSING

COPYRIGHT 2022
Welch~Comer & Associates, Inc.
This document, and ideas and designs incorporated herein, as an instrument of professional service, is the property of Welch~Comer & Associates, Inc., and is not to be used in whole or in part for any other project without the written authorization of Welch~Comer & Associates, Inc.

PROFESSIONAL ENGINEER LICENSED 15695 STATE OF IDAHO ADAM J DORSEY

11/30/22

WELCH-COMER ENGINEERS | SURVEYORS
www.welchcomer.com
330 E. Lakeside Ave, Suite 101
Coeur d'Alene, ID 83814
208-664-9382
(toll free) 877-815-5672
(fax) 208-664-5946

NO.	DATE	REVISION DESCRIPTION	BY

CITY OF MOSCOW
LILLY ST. RECONSTRUCTION
'A' ST. TO THIRD ST.

LEGEND AND ABBREVIATIONS

PROJ NO:	46016.01
DESIGNED BY:	AJD
DRAWN BY:	TJF/ JAL
CHECKED BY:	AJD
DWG NAME:	46016.01CS01.DWG
DATE:	01-14-2021
SHEET NO:	A4

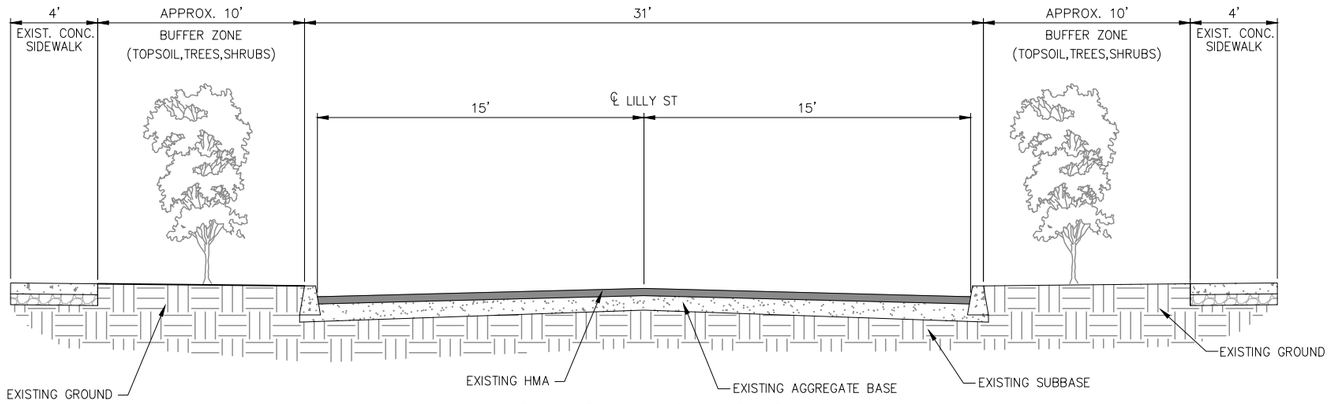

EXISTING TYPICAL SECTION

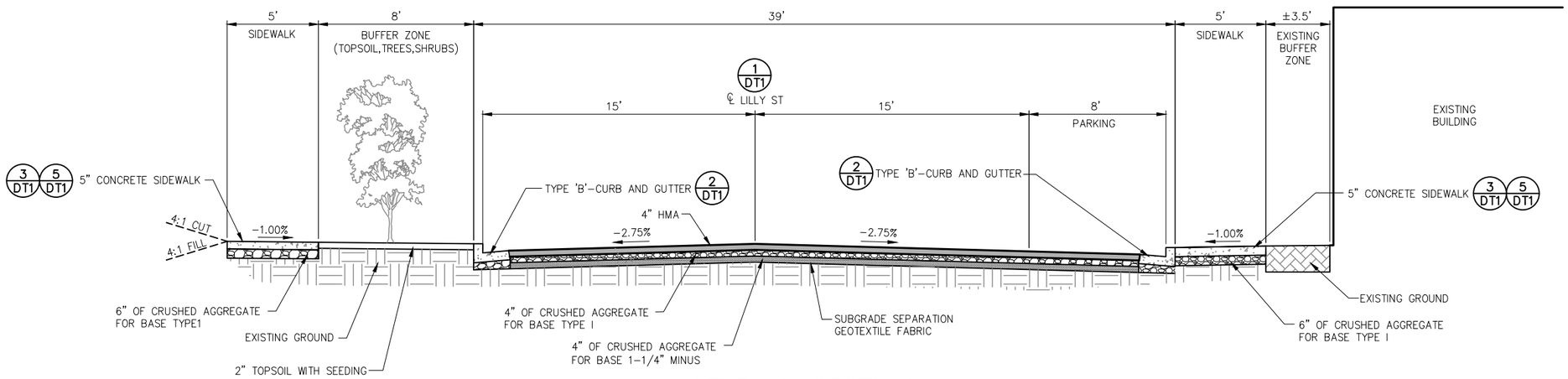

LILLY TYPICAL SECTION 1 A5

TRANSITION STA MATCH TO 10+67.71
STA 10+67.71 TO 11+30.97
TRANSITION STA 11+30.97 TO 11+51.36

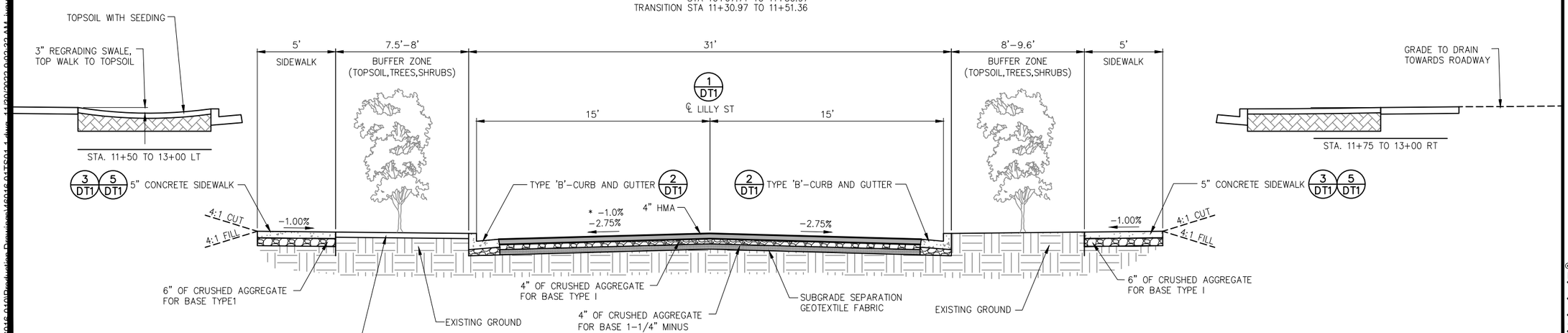

LILLY TYPICAL SECTION 2 A5

STA 11+51.36 TO 14+47.26
TRANSITION STA 14+47.26 TO 15+13.26
STA 15+13.26 TO 15+59.42 (*15+25 TO 15+69.42)
STA 17+75.62 TO 17+77.25
TRANSITION STA 17+77.25 TO MATCH

COPYRIGHT 2022
Welch~Comer & Associates, Inc.
This document, and ideas and designs incorporated herein, as an instrument of professional service, is the property of Welch~Comer & Associates, Inc., and is not to be used in whole or in part for any other project without the written authorization of Welch~Comer & Associates, Inc.

PROFESSIONAL ENGINEER LICENSED 15695 STATE OF IDAHO ADAM J DORSEY

11/30/22

WELCH-COMER ENGINEERS | SURVEYORS
www.welchcomer.com 208-664-9382
330 E. Lakeside Ave, Suite 101 (toll free) 877-815-5672
Coeur d'Alene, ID 83814 (fax) 208-664-5946

NO.	DATE	REVISION DESCRIPTION	BY

CITY OF MOSCOW
LILLY ST. RECONSTRUCTION
'A' ST. TO THIRD ST.

TYPICAL SECTIONS
LILLY STREET

PROJ NO:	46016.01
DESIGNED BY:	AJD
DRAWN BY:	TJF
CHECKED BY:	AJD
DWG NAME:	46016.01TS01-1.DWG
DATE:	11-21-2022
SHEET NO:	A5

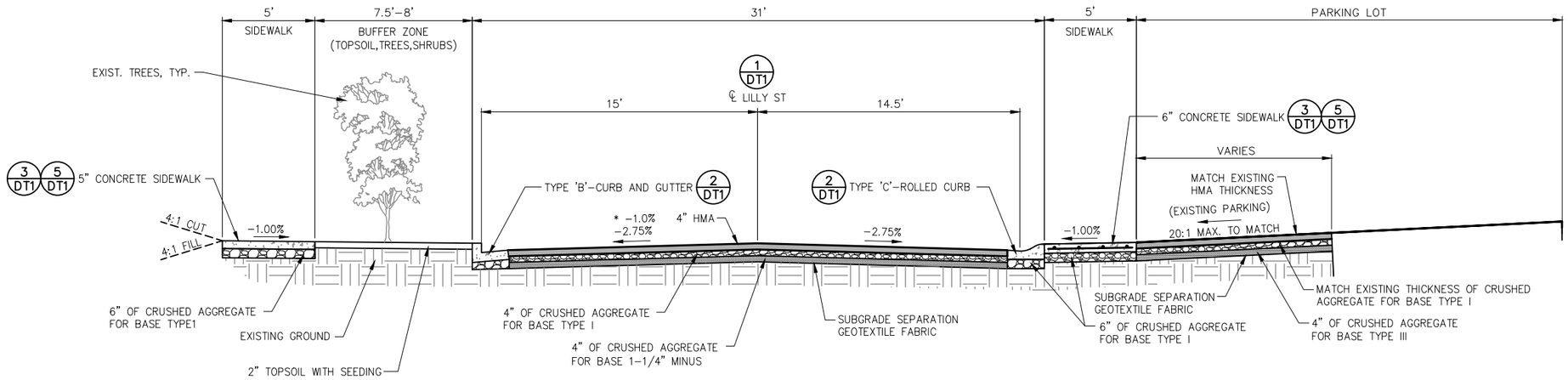

LILLY TYPICAL SECTION 1 A6

TRANSITION STA 15+59.42 TO 15+69.42
STA 15+69.42 TO 17+65.62 (*15+69.42 TO 17+25)
TRANSITION STA 17+65.62 TO 17+75.62

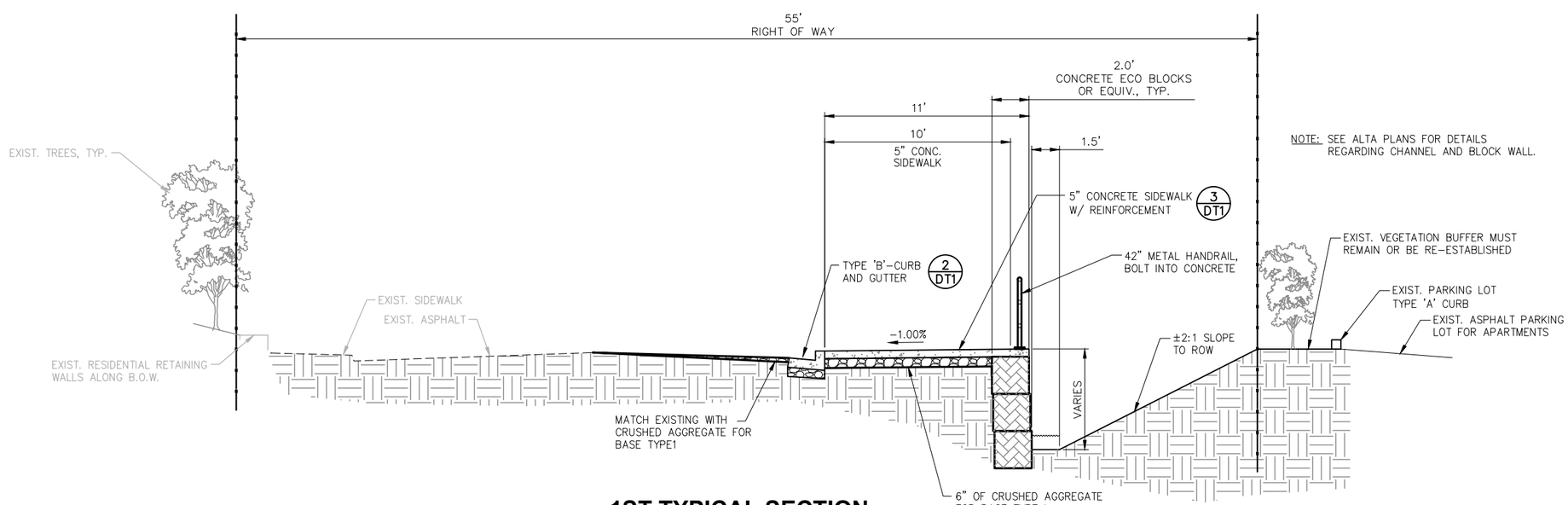

1ST TYPICAL SECTION

BASE BID TYPICAL SECTION, SEE C10 FOR ADD ALTERNATE #1

COPYRIGHT 2022
Welch~Comer & Associates, Inc.
This document, and ideas and designs incorporated herein, as an instrument of professional service, is the property of Welch~Comer & Associates, Inc., and is not to be used in whole or in part for any other project without the written authorization of Welch~Comer & Associates, Inc.

PROFESSIONAL ENGINEER
LICENSED
15695
STATE OF IDAHO
ADAM J DORSEY

11/30/22

WELCH-COMER
ENGINEERS | SURVEYORS
www.welchcomer.com
330 E. Lakeside Ave, Suite 101
Coeur d'Alene, ID 83814
208-664-9382
(toll free) 877-815-5672
(fax) 208-664-5946

NO.	DATE	REVISION DESCRIPTION	BY

CITY OF MOSCOW

LILLY ST. RECONSTRUCTION
'A' ST. TO THIRD ST.

TYPICAL SECTIONS
LILLY STREET

PROJ NO:	46016.01
DESIGNED BY:	AJD
DRAWN BY:	TJF
CHECKED BY:	AJD
DWG NAME:	46016.01TS01-1.DWG
DATE:	11-21-2022
SHEET NO:	A6

NOTES:

1. ITEMS REQUIRED TO BE REMOVED BUT NOT SPECIFICALLY CALLED OUT OR ITEMIZED IN THE BID SCHEDULE ARE CONSIDERED INCIDENTAL TO REMOVAL OF OBSTRUCTIONS.
2. PRESERVE AND PROTECT EXISTING PLANTS, SHRUBS AND TREES NOT CALLED OUT FOR REMOVAL, INCLUDING THOSE LOCATED IN THE EXISTING BUFFER BETWEEN THE CURB AND SIDEWALK.
3. BACKFILL AND COMPACT ALL VOIDS LEFT BY ITEMS REMOVED IN ACCORDANCE CLASS D BACKFILL REQUIREMENTS. SEE CITY OF MOSCOW SPECIFICATIONS AND STD DTL 33B/DT6. LABOR, MATERIALS AND EQUIPMENT REQUIRED IS CONSIDERED INCIDENTAL TO RESPECTIVE ITEM OR REMOVAL OF OBSTRUCTIONS.
4. COORDINATE W/ENGINEER PRIOR TO REMOVAL OF SIDEWALK BETWEEN 15+15–15+60 LT. EXISTING TREES/PRIVATE PROPERTY MAY NOT ALLOW FOR IMPROVEMENT OF SIDEWALK.
5. COORDINATE W/ENGINEER PRIOR TO REMOVAL OF SIDEWALK BETWEEN 16+50–17+10 LT. EXISTING TREES/PRIVATE PROPERTY MAY NOT ALLOW FOR IMPROVEMENT OF SIDEWALK.
6. LAYOUT PROPOSED CHANNEL EXCAVATION TO CONFIRM IF TREE REMOVAL IS NECESSARY. COORDINATE WITH CITY AND ENGINEER PRIOR TO TREE REMOVAL.

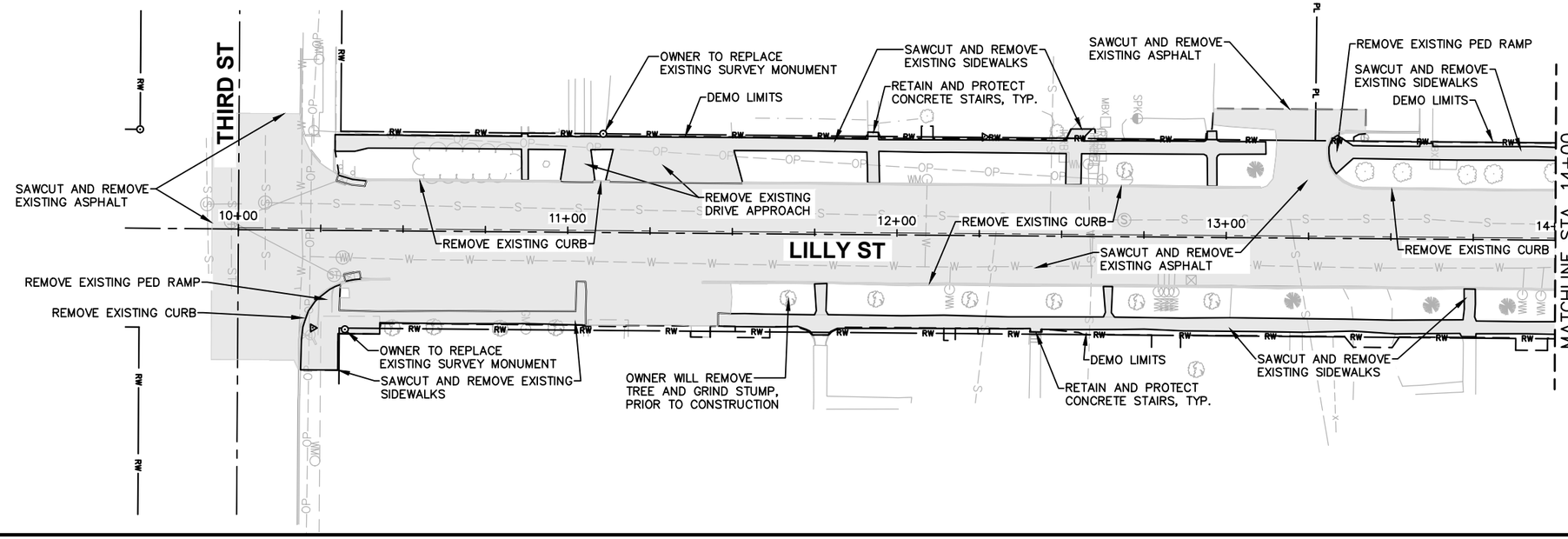

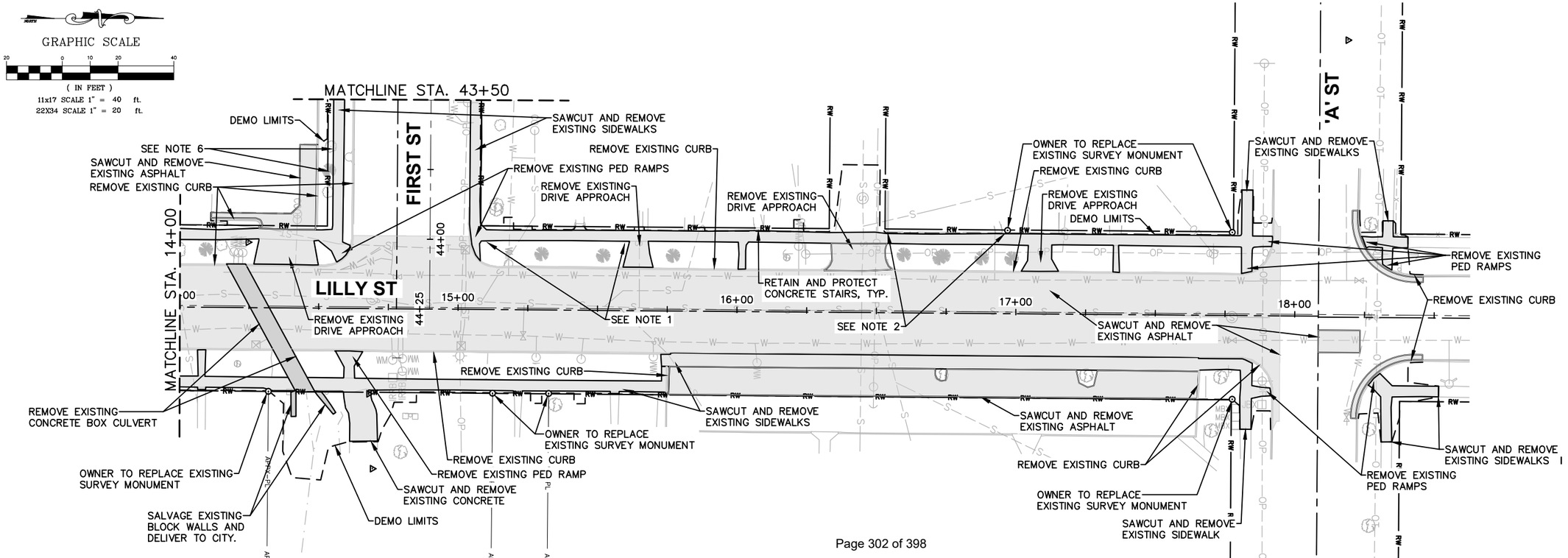

UNDERGROUND SERVICE ALERT
ONE-CALL NUMBER
811
CALL TWO BUSINESS DAYS BEFORE YOU DIG

COPYRIGHT 2022
Welch-Comer & Associates, Inc.
This document, and ideas and designs incorporated herein, as an instrument of professional service, is the property of Welch-Comer & Associates, Inc., and is not to be used in whole or in part for any other project without the written authorization of Welch-Comer & Associates, Inc.

PROFESSIONAL ENGINEER LICENSED 15695 STATE OF IDAHO ADAM J DORSEY

11/30/22

WELCH-COMER
ENGINEERS | SURVEYORS
www.welchcomer.com 208-664-9382
330 E. Lakeside Ave, Suite 101 (toll free) 877-815-5672
Coeur d'Alene, ID 83814 (fax) 208-664-5946

NO.	DATE	REVISION DESCRIPTION	BY

CITY OF MOSCOW
LILLY ST. RECONSTRUCTION
'A' ST. TO THIRD ST.

LILLY STREET
DEMOLITION PLAN

PROJ NO:	46016.01
DESIGNED BY:	AJD
DRAWN BY:	TJF
CHECKED BY:	AJD
DWG NAME:	46016.01DEMO1.DWG
DATE:	11-21-2022
SHEET NO:	**DEMO1**

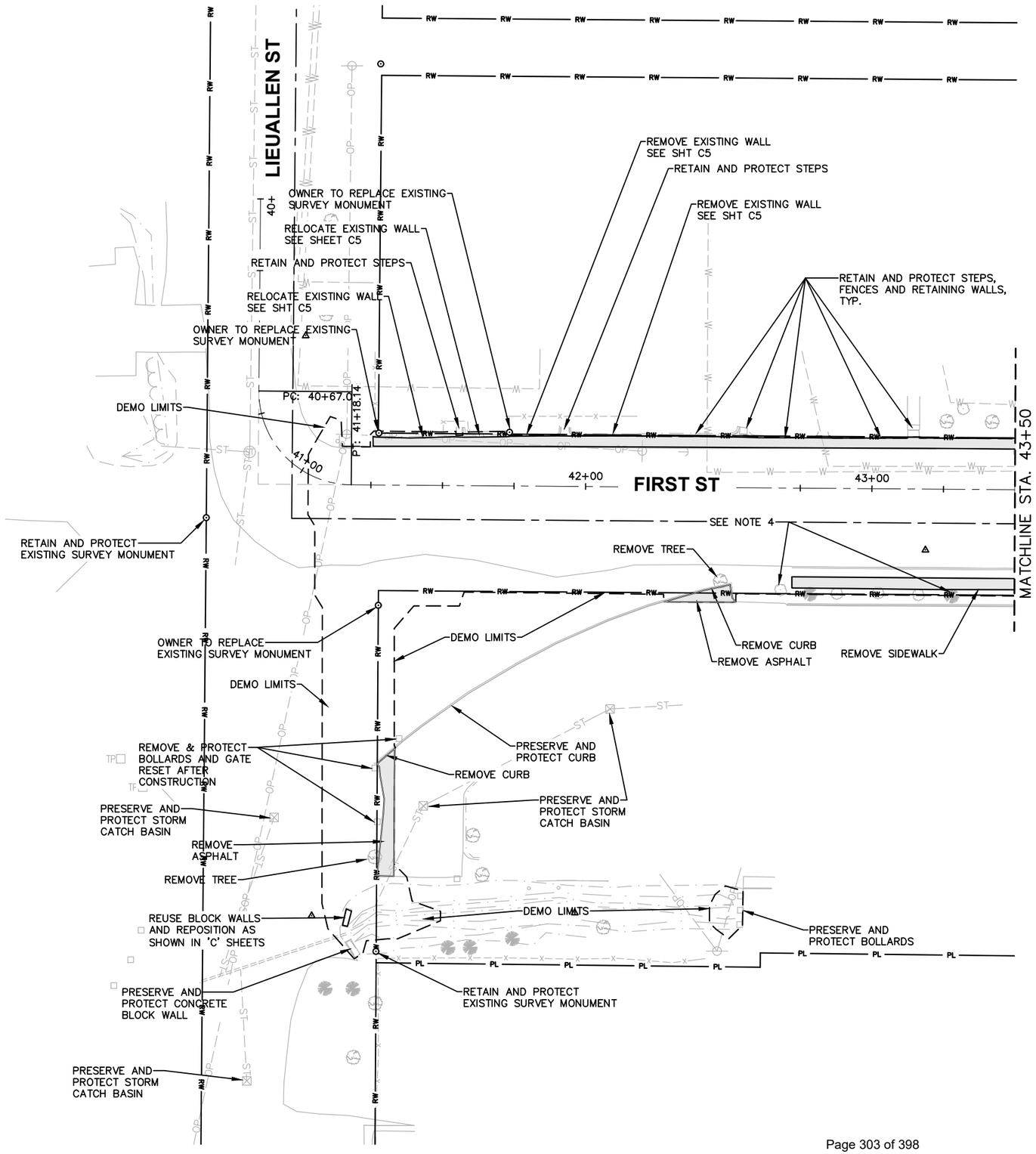

GRAPHIC SCALE

20 0 10 20 40

(IN FEET)

11x17 SCALE 1" = 40 ft.

22X34 SCALE 1" = 20 ft.

NOTES:

1. ITEMS REQUIRED TO BE REMOVED BUT NOT SPECIFICALLY CALLED OUT OR ITEMIZED IN THE BID SCHEDULE ARE CONSIDERED INCIDENTAL TO REMOVAL OF OBSTRUCTIONS.
2. PRESERVE AND PROTECT EXISTING PLANTS, SHRUBS AND TREES NOT CALLED OUT FOR REMOVAL, INCLUDING THOSE LOCATED IN THE EXISTING BUFFER BETWEEN THE CURB AND SIDEWALK.
3. BACKFILL AND COMPACT ALL VOIDS LEFT BY ITEMS REMOVED IN ACCORDANCE CLASS D BACKFILL REQUIREMENTS. SEE CITY OF MOSCOW SPECIFICATIONS AND STD DTL 33B/DT6. LABOR, MATERIALS AND EQUIPMENT REQUIRED IS CONSIDERED INCIDENTAL TO RESPECTIVE ITEM OR REMOVAL OF OBSTRUCTIONS.
4. LAYOUT PROPOSED CHANNEL EXCAVATION TO CONFIRM IF TREE REMOVAL IS NECESSARY. COORDINATE WITH CITY AND ENGINEER PRIOR TO TREE REMOVAL.

ADD ALTERNATE #1 INCLUDES ALL WORK NORTH OF THE PROPOSED CURB AND GUTTER BETWEEN STA 41+20 AND 43+88

UNDERGROUND SERVICE ALERT
ONE-CALL NUMBER
811
CALL TWO BUSINESS DAYS BEFORE YOU DIG

COPYRIGHT 2022
Welch~Comer & Associates, Inc.
This document, and ideas and designs incorporated herein, as an instrument of professional service, is the property of Welch~Comer & Associates, Inc., and is not to be used in whole or in part for any other project without the written authorization of Welch~Comer & Associates, Inc.

PROFESSIONAL ENGINEER
LICENSED
15695
STATE OF IDAHO
ADAM J DORSEY

11/30/22

WELCH-COMER
ENGINEERS | SURVEYORS
www.welchcomer.com
330 E. Lakeside Ave, Suite 101
Coeur d'Alene, ID 83814
208-664-9382
(toll free) 877-815-5672
(fax) 208-664-5946

NO.	DATE	REVISION DESCRIPTION	BY

CITY OF MOSCOW
LILLY ST. RECONSTRUCTION
'A' ST. TO THIRD ST.

FIRST STREET
DEMOLITION PLAN

PROJ NO:	46016.01
DESIGNED BY:	AJD
DRAWN BY:	TJF
CHECKED BY:	AJD
DWG NAME:	46016.01DEMO1.DWG
DATE:	11-21-2022
SHEET NO:	

DEMO2

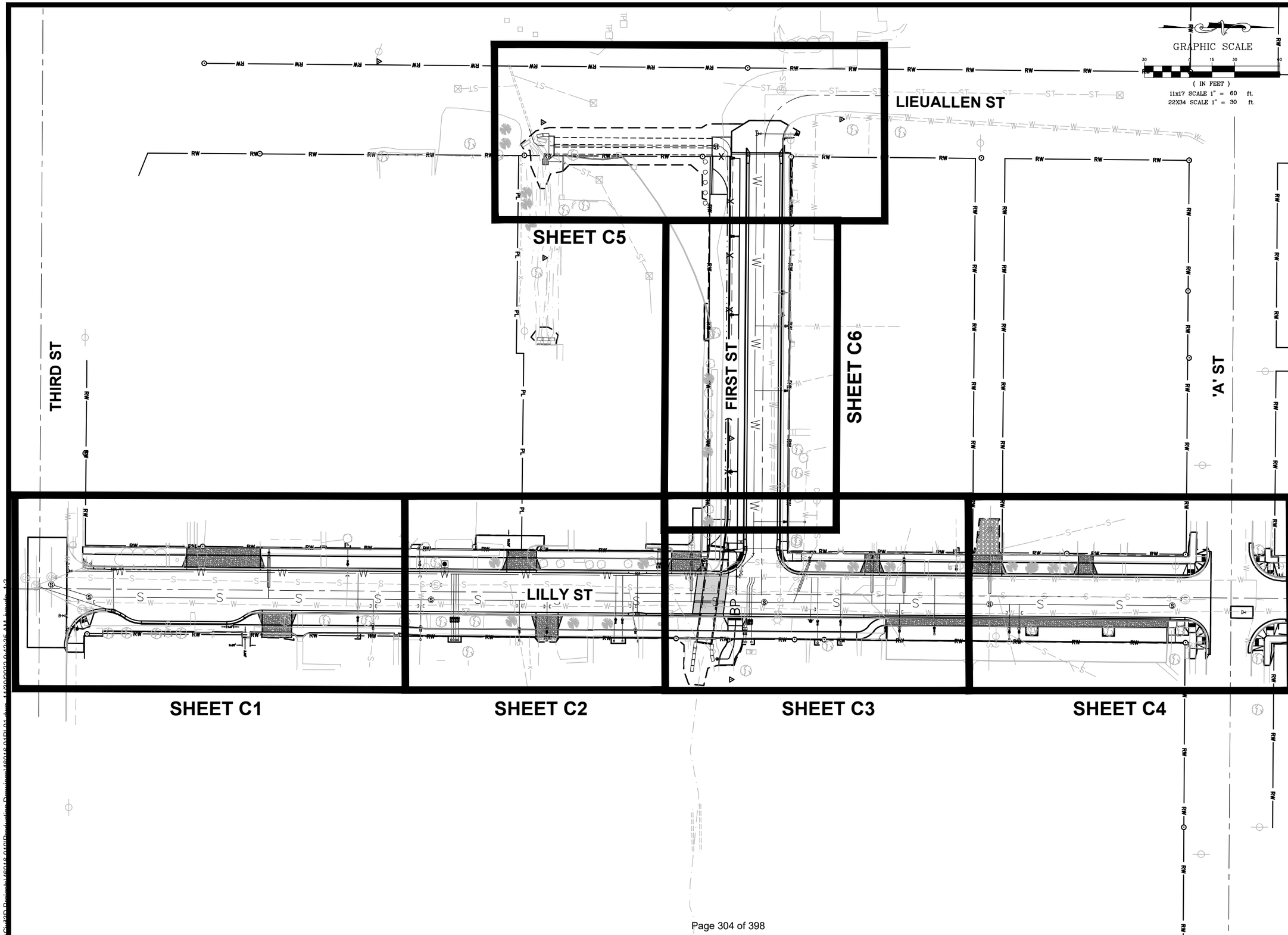

COPYRIGHT 2022
Welch~Comer & Associates, Inc.
This document, and ideas and designs incorporated herein, as an instrument of professional service, is the property of Welch~Comer & Associates, Inc., and is not to be used in whole or in part for any other project without the written authorization of Welch~Comer & Associates, Inc.

PROFESSIONAL ENGINEER
LICENSED
15695
STATE OF IDAHO
ADAM J DORSEY

11/30/22

WELCH-COMER
ENGINEERS | SURVEYORS
www.welchcomer.com
330 E. Lakeside Ave, Suite 101
Coeur d'Alene, ID 83814
208–664–9382
(toll free) 877–815–5672
(fax) 208–664–5946

NO.	DATE	REVISION DESCRIPTION	BY

CITY OF MOSCOW

LILLY ST. RECONSTRUCTION
'A' ST. TO THIRD ST.

PROJECT OVERVIEW

PROJ NO:	46016.01
DESIGNED BY:	AJD
DRAWN BY:	TJF
CHECKED BY:	AJD
DWG NAME:	46016.01PL01.DWG
DATE:	01–14–2021
SHEET NO:	

CO

UNDERGROUND SERVICE ALERT
ONE-CALL NUMBER
811
CALL TWO BUSINESS DAYS BEFORE YOU DIG

GRAPHIC SCALE
(IN FEET)
11x17 SCALE 1" = 20 ft.
22X34 SCALE 1" = 10 ft.

THIRD ST

LILLY ST

MATCHLINE STA. 12+50

STA 10+29.16, 28.50' LT BEGIN CONCRETE SIDEWALK, 5' WIDE (3/DT1)
CONSTRUCTION LIMIT
OWNER TO REPLACE EXISTING SURVEY MONUMENT
MODIFY EXISTING IRRIGATION SYSTEM
CONSTRUCTION LIMIT
(3/DT1) CONCRETE SIDEWALK 5' WIDE
14.5' RADII
STA 10+36.60, 15.50' LT PT-TBC
(2/DT1) STA 10+30.41, 16.89' LT BEGIN CURB & GUTTER, TYPE 'B'
STA 11+24.79, 15.50' LT CONCRETE DRIVEWAY APPROACH, TYPE II, 50 WIDE (5/DT1)
CURB & GUTTER TYPE 'B', TYP. (2/DT1)
SEE SH8 REPAIR (1/DT7)
10+00
11+00
12+00
STA 11+51.36, 15.50' RT PT-TBC
STA 11+61.36, 15.50' RT CONCRETE DRIVEWAY APPROACH, TYPE II, 20 WIDE (5/DT1)
STA 10+57.65, 19.86' RT PRC-TBC
STA 11+39.66, 19.40' RT PRC-TBC
CURB & GUTTER TYPE 'B', TYP.
STA 10+69.32, 23.50' RT PT-TBC
STA 11+27.36, 23.50' RT PC-TBC
STA 12+44.25, 23.50' RT WALK ANGLE POINT
SAWCUT & MATCH EXISTING
4.6'
OWNER TO REPLACE EXISTING SURVEY MONUMENT
PRESERVE AND PROTECT CONCRETE RAMP, MATCH GRADES AT BOTTOM RAMP
5.50'
3.50'
CONSTRUCTION LIMIT
(2/DT1) STA 10+19.21, 42.98' RT BEGIN CURB & GUTTER, TYPE 'B' AND (3/DT1) CONCRETE SIDEWALK
STA 10+29.44, 20.09' RT 5' PED RAMP, TYPE II (4/DT1)
MATCH CONCRETE GRADE AT DOOR
(3/DT1) CONCRETE SIDEWALK 5' WIDE
SEE CURB INTERSECTION DETAIL C7
3' GRAVEL TRANSITION TO MATCH EXISTING
FINISH GRADE SIDEWALK TO MATCH TOP OF FIRST STEP
SAWCUT AND MATCH EXISTING ADJUST MATCH POINT TO ACHIEVE 5% MAX SLOPE, IF NECESSARY

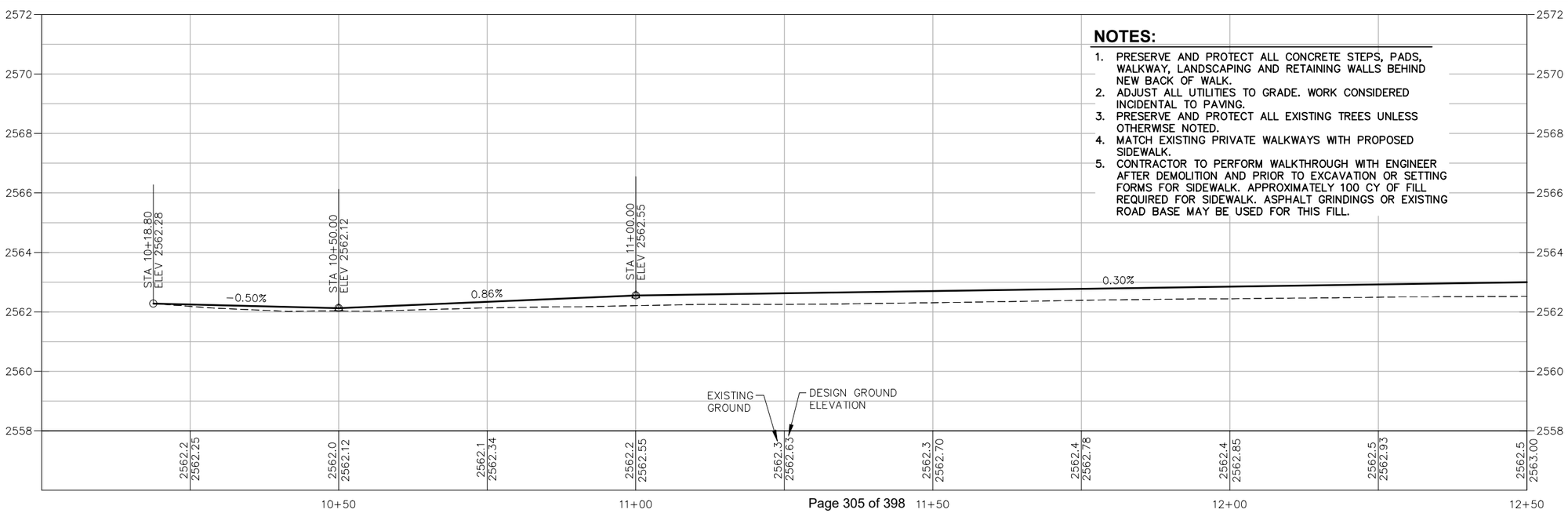

NOTES:

1. PRESERVE AND PROTECT ALL CONCRETE STEPS, PADS, WALKWAY, LANDSCAPING AND RETAINING WALLS BEHIND NEW BACK OF WALK.
2. ADJUST ALL UTILITIES TO GRADE. WORK CONSIDERED INCIDENTAL TO PAVING.
3. PRESERVE AND PROTECT ALL EXISTING TREES UNLESS OTHERWISE NOTED.
4. MATCH EXISTING PRIVATE WALKWAYS WITH PROPOSED SIDEWALK.
5. CONTRACTOR TO PERFORM WALKTHROUGH WITH ENGINEER AFTER DEMOLITION AND PRIOR TO EXCAVATION OR SETTING FORMS FOR SIDEWALK. APPROXIMATELY 100 CY OF FILL REQUIRED FOR SIDEWALK. ASPHALT GRINDINGS OR EXISTING ROAD BASE MAY BE USED FOR THIS FILL.

COPYRIGHT 2022
Welch~Comer & Associates, Inc.
This document, and ideas and designs incorporated herein, as an instrument of professional service, is the property of Welch~Comer & Associates, Inc., and is not to be used in whole or in part for any other project without the written authorization of Welch~Comer & Associates, Inc.

PROFESSIONAL ENGINEER LICENSED 15695 STATE OF IDAHO ADAM J DORSEY

11/30/22

WELCH-COMER
ENGINEERS | SURVEYORS
www.welchcomer.com
330 E. Lakeside Ave, Suite 101
Coeur d'Alene, ID 83814
208-664-9382
(toll free) 877-815-5672
(fax) 208-664-5946

NO.	DATE	REVISION DESCRIPTION	BY

CITY OF MOSCOW
LILLY ST. RECONSTRUCTION
'A' ST. TO THIRD ST.

LILLY STREET
PLAN AND PROFILE

PROJ NO:	46016.01
DESIGNED BY:	AJD
DRAWN BY:	TJF
CHECKED BY:	AJD
DWG NAME:	46016.01PL01.DWG
DATE:	11-21-2022
SHEET NO:	C1

NOTES:

1. PRESERVE AND PROTECT ALL CONCRETE STEPS, PADS, WALKWAY, LANDSCAPING AND RETAINING WALLS BEHIND NEW BACK OF WALK.
2. ADJUST ALL UTILITIES TO GRADE. WORK CONSIDERED INCIDENTAL TO PAVING.
3. PRESERVE AND PROTECT ALL EXISTING TREES UNLESS OTHERWISE NOTED.
4. MATCH EXISTING PRIVATE WALKWAYS WITH PROPOSED SIDEWALK.
5. CONTRACTOR TO PERFORM WALKTHROUGH WITH ENGINEER AFTER DEMOLITION AND PRIOR TO EXCAVATION OR SETTING FORMS FOR SIDEWALK. APPROXIMATELY 100 CY OF FILL REQUIRED FOR SIDEWALK. ASPHALT GRINDINGS OR EXISTING ROAD BASE MAY BE USED FOR THIS FILL.

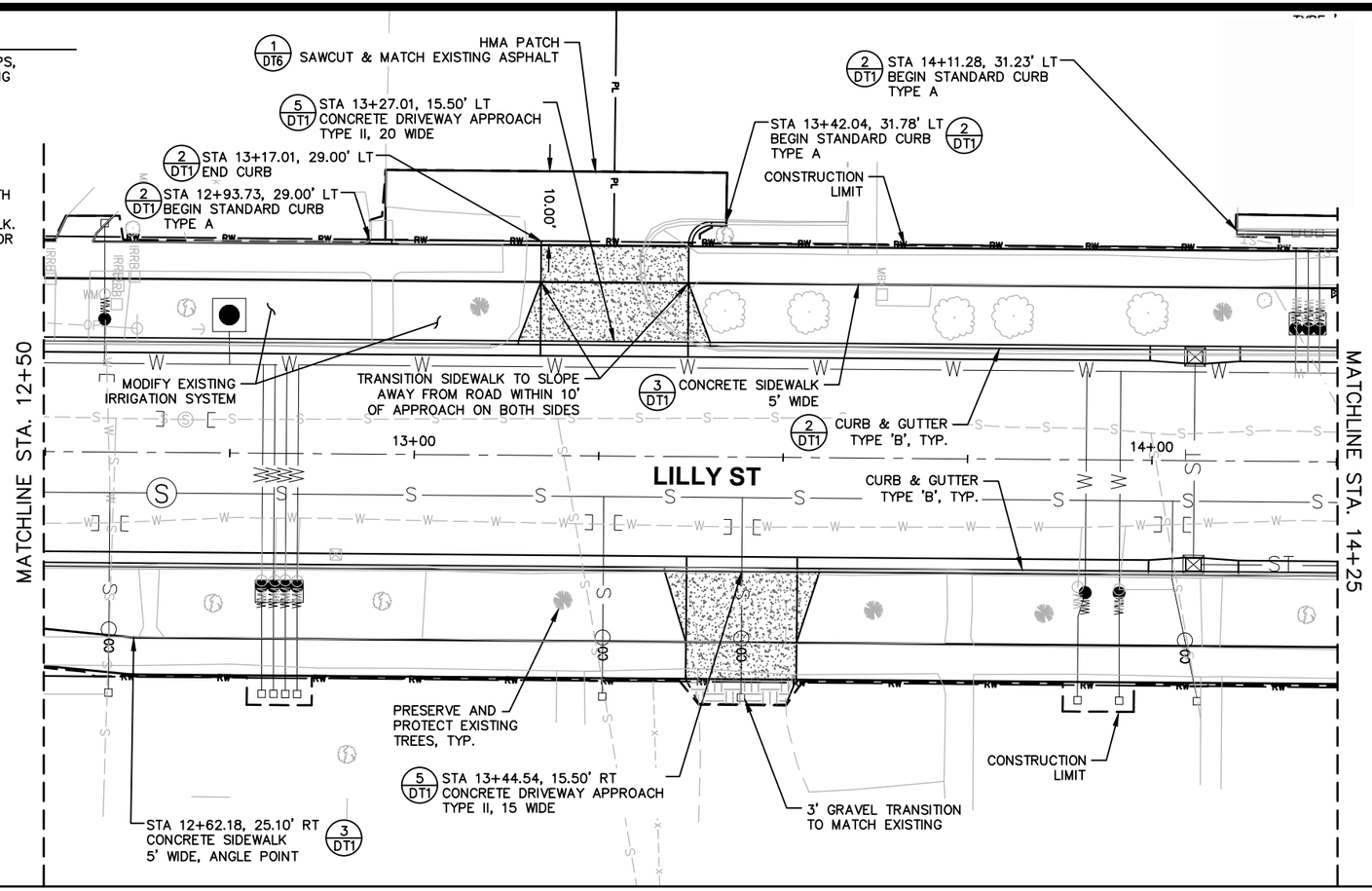

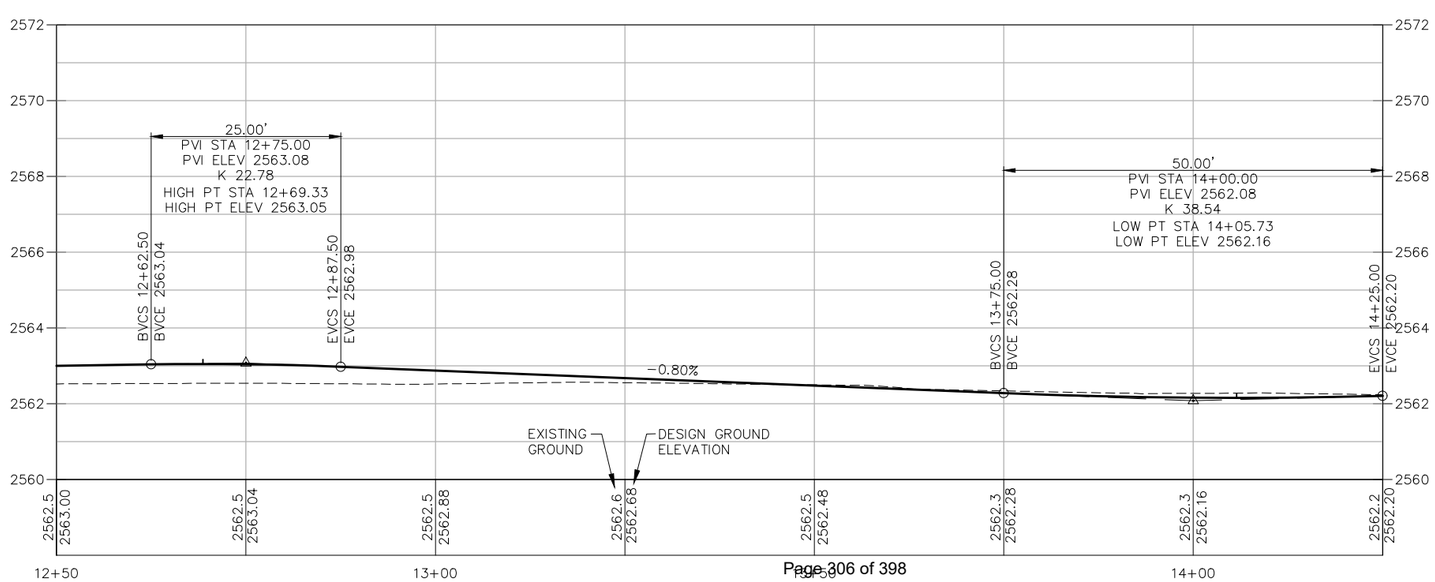

UNDERGROUND SERVICE ALERT
ONE-CALL NUMBER
811
CALL TWO BUSINESS DAYS BEFORE YOU DIG

NORTH

GRAPHIC SCALE
10 0 5 10 20
(IN FEET)
11x17 SCALE 1" = 20 ft.
22X34 SCALE 1" = 10 ft.

COPYRIGHT 2022
Welch~Comer & Associates, Inc.
This document, and ideas and designs incorporated herein, as an instrument of professional service, is the property of Welch~Comer & Associates, Inc., and is not to be used in whole or in part for any other project without the written authorization of Welch~Comer & Associates, Inc.

PROFESSIONAL ENGINEER
LICENSED
15695
STATE OF IDAHO
ADAM J DORSEY

11/30/22

WELCH-COMER
ENGINEERS | SURVEYORS
www.welchcomer.com
330 E. Lakeside Ave, Suite 101
Coeur d'Alene, ID 83814
208-664-9382
(toll free) 877-815-5672
(fax) 208-664-5946

NO.	DATE	REVISION DESCRIPTION	BY

CITY OF MOSCOW

LILLY ST. RECONSTRUCTION
'A' ST. TO THIRD ST.

LILLY STREET
PLAN AND PROFILE

PROJ NO:	46016.01
DESIGNED BY:	AJD
DRAWN BY:	TJF
CHECKED BY:	AJD
DWG NAME:	46016.01PL01.DWG
DATE:	11-21-2022
SHEET NO:	C2

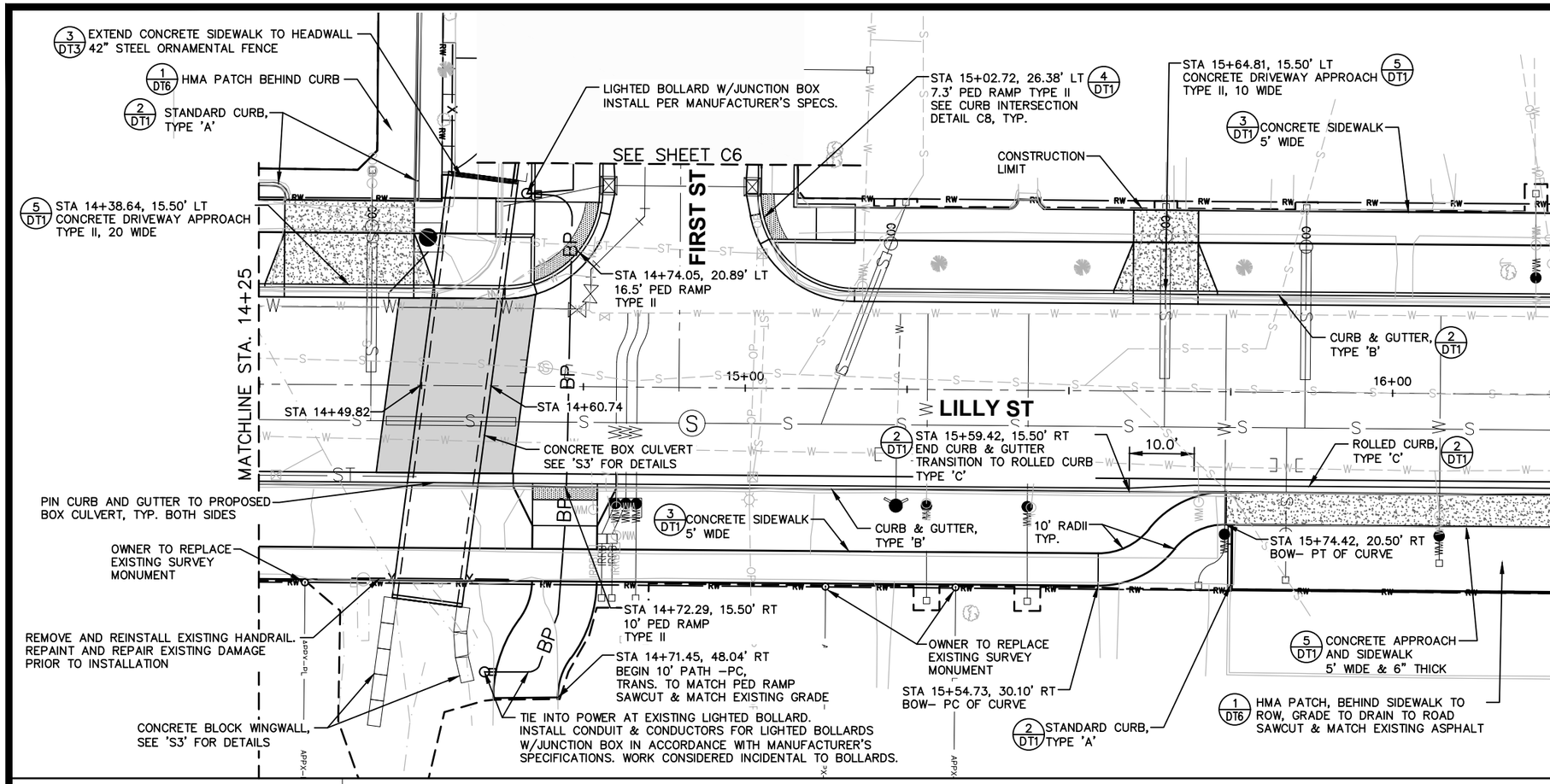

UNDERGROUND SERVICE ALERT
ONE-CALL NUMBER
811
CALL TWO BUSINESS DAYS BEFORE YOU DIG

COPYRIGHT 2022
Welch~Comer & Associates, Inc.
This document, and ideas and designs incorporated herein, as an instrument of professional service, is the property of Welch~Comer & Associates, Inc., and is not to be used in whole or in part for any other project without the written authorization of Welch~Comer & Associates, Inc.

PROFESSIONAL ENGINEER LICENSED 15695 STATE OF IDAHO ADAM J DORSEY

11/30/22

REINFORCED CONCRETE PAVEMENT INSTALL DIRECTLY OVER PROPOSED BOX CULVERT. MATCH CROWN OF ROADWAY. STA 14+44.78 TO 14+65.77 1 DT4

GRAPHIC SCALE
10 0 5 10 20
(IN FEET)
11x17 SCALE 1" = 20 ft.
22X34 SCALE 1" = 10 ft.

NOTES:

1. PRESERVE AND PROTECT ALL CONCRETE STEPS, PADS, WALKWAY, LANDSCAPING AND RETAINING WALLS BEHIND NEW BACK OF WALK.
2. ADJUST ALL UTILITIES TO GRADE. WORK CONSIDERED INCIDENTAL TO PAVING.
3. PRESERVE AND PROTECT ALL EXISTING TREES UNLESS OTHERWISE NOTED.
4. MATCH EXISTING PRIVATE WALKWAYS WITH PROPOSED SIDEWALK.
5. CONTRACTOR TO PERFORM WALKTHROUGH WITH ENGINEER AFTER DEMOLITION AND PRIOR TO EXCAVATION OR SETTING FORMS FOR SIDEWALK. APPROXIMATELY 100 CY OF FILL REQUIRED FOR SIDEWALK. ASPHALT GRINDINGS OR EXISTING ROAD BASE MAY BE USED FOR THIS FILL.

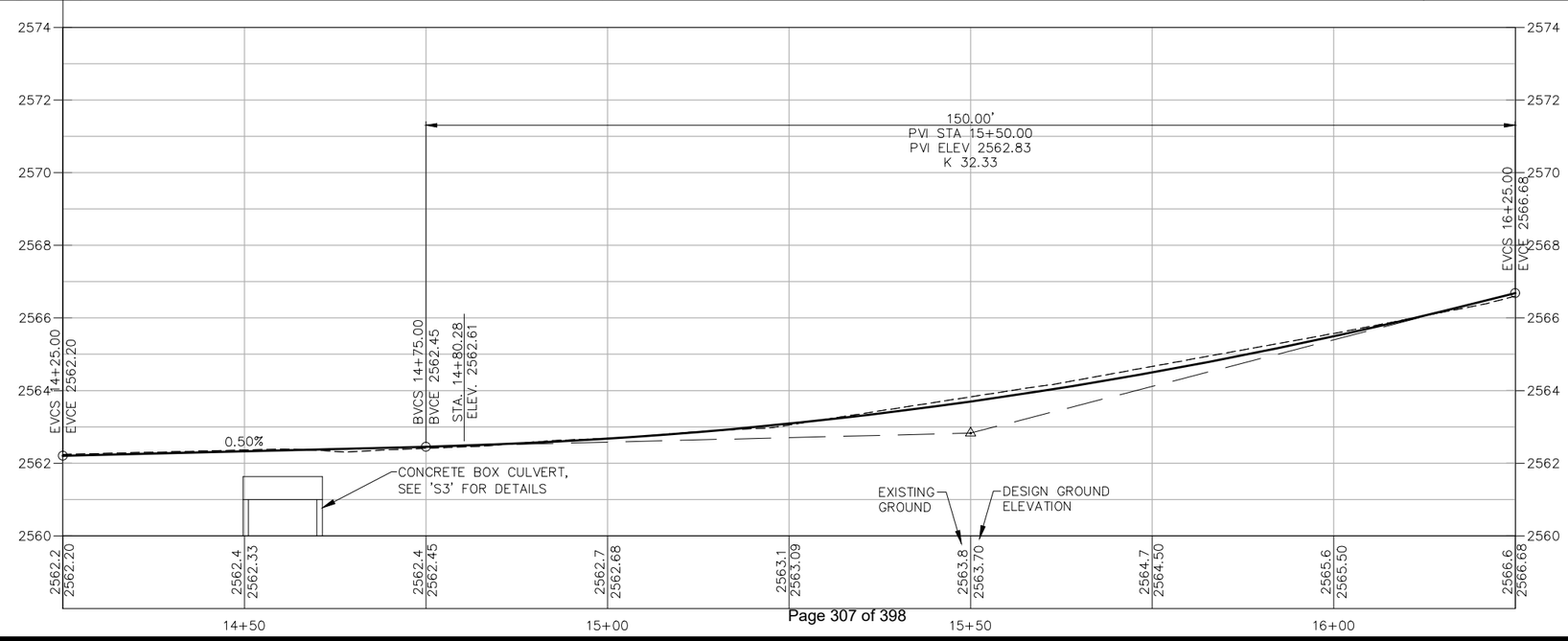

WELCH-COMER
ENGINEERS | SURVEYORS
www.welchcomer.com
330 E. Lakeside Ave, Suite 101
Coeur d'Alene, ID 83814
208-664-9382
(toll free) 877-815-5672
(fax) 208-664-5946

NO.	DATE	REVISION DESCRIPTION	BY

CITY OF MOSCOW
LILLY ST. RECONSTRUCTION
'A' ST. TO THIRD ST.

LILLY STREET
PLAN AND PROFILE

PROJ NO:	46016.01
DESIGNED BY:	AJD
DRAWN BY:	TJF
CHECKED BY:	AJD
DWG NAME:	46016.01PL01.DWG
DATE:	01-06-2022
SHEET NO:	C3

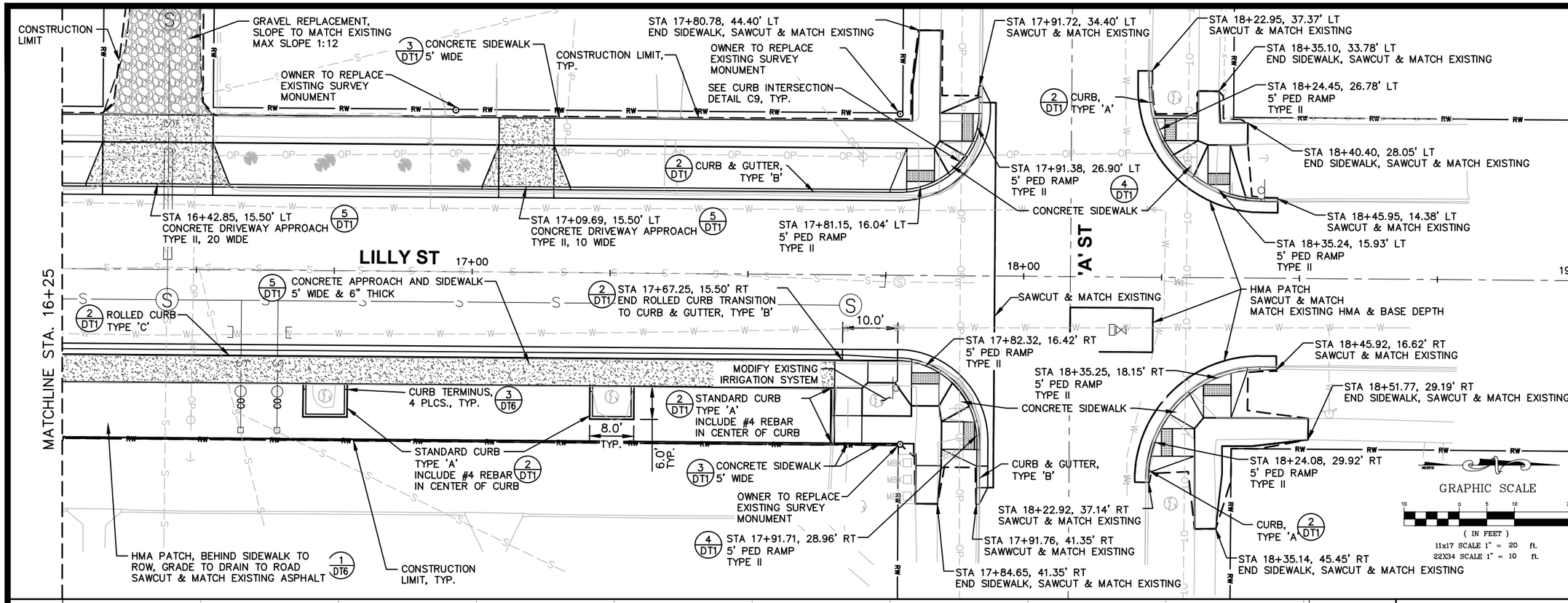

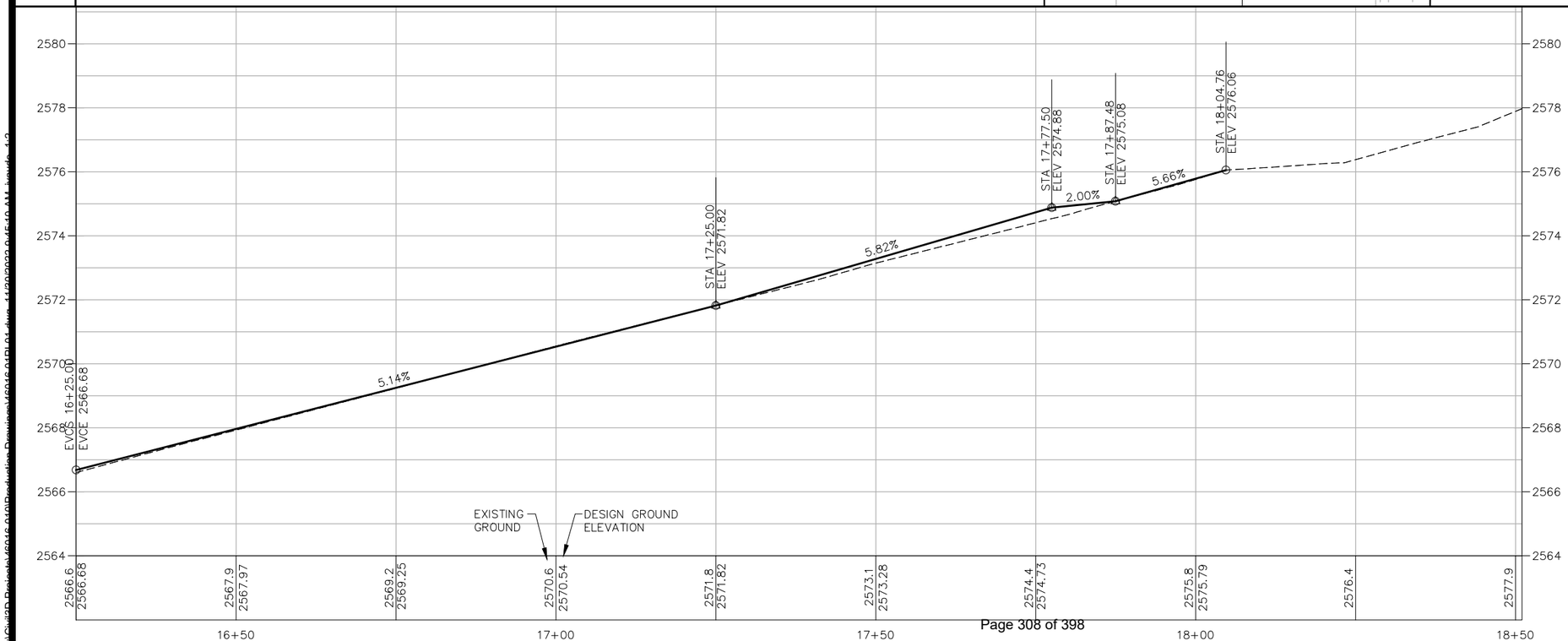

UNDERGROUND SERVICE ALERT
ONE-CALL NUMBER
811
CALL TWO BUSINESS DAYS BEFORE YOU DIG

NOTES:

1. PRESERVE AND PROTECT ALL CONCRETE STEPS, PADS, WALKWAY, LANDSCAPING AND RETAINING WALLS BEHIND NEW BACK OF WALK.
2. ADJUST ALL UTILITIES TO GRADE. WORK CONSIDERED INCIDENTAL TO PAVING.
3. PRESERVE AND PROTECT ALL EXISTING TREES UNLESS OTHERWISE NOTED.
4. MATCH EXISTING PRIVATE WALKWAYS WITH PROPOSED SIDEWALK.
5. CONTRACTOR TO PERFORM WALKTHROUGH WITH ENGINEER AFTER DEMOLITION AND PRIOR TO EXCAVATION OR SETTING FORMS FOR SIDEWALK. APPROXIMATELY 100 CY OF FILL REQUIRED FOR SIDEWALK. ASPHALT GRINDINGS OR EXISTING ROAD BASE MAY BE USED FOR THIS FILL.

COPYRIGHT 2022
Welch-Comer & Associates, Inc.
This document, and ideas and designs incorporated herein, as an instrument of professional service, is the property of Welch-Comer & Associates, Inc., and is not to be used in whole or in part for any other project without the written authorization of Welch-Comer & Associates, Inc.

PROFESSIONAL ENGINEER LICENSED 15695 STATE OF IDAHO ADAM J DORSEY

11/30/22

WELCH-COMER ENGINEERS | SURVEYORS
www.welchcomer.com
330 E. Lakeside Ave, Suite 101
Coeur d'Alene, ID 83814
208-664-9382
(toll free) 877-815-5672
(fax) 208-664-5946

NO.	DATE	REVISION DESCRIPTION	BY

CITY OF MOSCOW

LILLY ST. RECONSTRUCTION
'A' ST. TO THIRD ST.

LILLY STREET
PLAN AND PROFILE

PROJ NO:	46016.01
DESIGNED BY:	AJD
DRAWN BY:	TJF
CHECKED BY:	AJD
DWG NAME:	46016.01PL01.DWG
DATE:	11-21-2022
SHEET NO:	C4

GRAPHIC SCALE

(IN FEET)
11x17 SCALE 1" = 20 ft.
22X34 SCALE 1" = 10 ft.

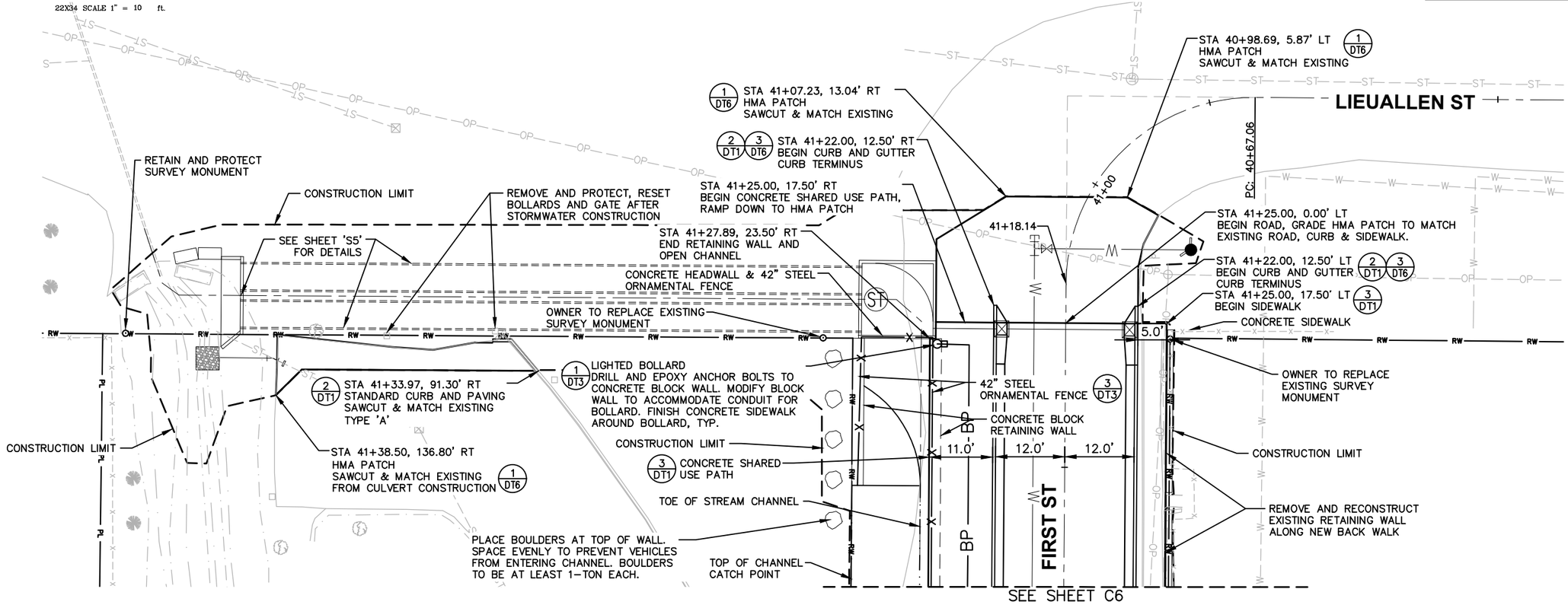

NOTES:

1. PRESERVE AND PROTECT ALL CONCRETE STEPS, PADS, WALKWAY, LANDSCAPING AND RETAINING WALLS BEHIND NEW BACK OF WALK.
2. ADJUST ALL UTILITIES TO GRADE. WORK CONSIDERED INCIDENTAL TO PAVING.
3. PRESERVE AND PROTECT ALL EXISTING TREES UNLESS OTHERWISE NOTED.
4. MATCH EXISTING PRIVATE WALKWAYS WITH PROPOSED SIDEWALK.
5. CONTRACTOR TO PERFORM WALKTHROUGH WITH ENGINEER AFTER DEMOLITION AND PRIOR TO EXCAVATION OR SETTING FORMS FOR SIDEWALK. APPROXIMATELY 100 CY OF FILL REQUIRED FOR SIDEWALK. ASPHALT GRINDINGS OR EXISTING ROAD BASE MAY BE USED FOR THIS FILL.
6. ADD ALTERNATE #1 INCLUDES ALL WORK BETWEEN STA 41+25 AND 43+94, NORTH OF THE PROPOSED ORNAMENTAL FENCE.

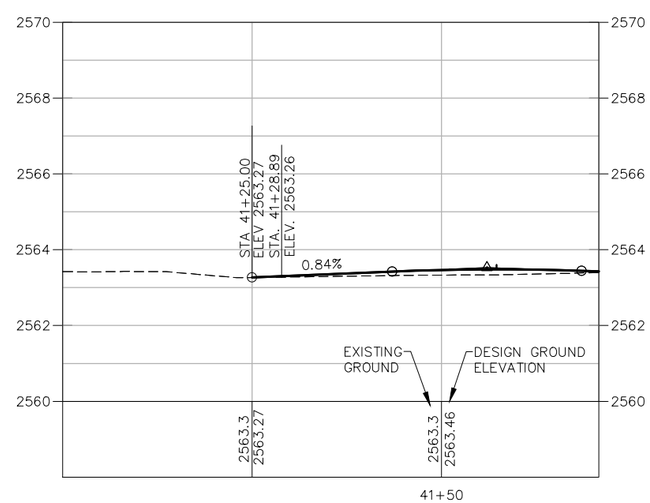

UNDERGROUND SERVICE ALERT
ONE-CALL NUMBER
811
CALL TWO BUSINESS DAYS BEFORE YOU DIG

COPYRIGHT 2022
Welch~Comer & Associates, Inc.
This document, and ideas and designs incorporated herein, as an instrument of professional service, is the property of Welch~Comer & Associates, Inc., and is not to be used in whole or in part for any other project without the written authorization of Welch~Comer & Associates, Inc.

PROFESSIONAL ENGINEER LICENSED 15695 STATE OF IDAHO ADAM J DORSEY

11/30/22

WELCH-COMER ENGINEERS | SURVEYORS
www.welchcomer.com
330 E. Lakeside Ave, Suite 101
Coeur d'Alene, ID 83814
208-664-9382
(toll free) 877-815-5672
(fax) 208-664-5946

NO.	DATE	REVISION DESCRIPTION	BY

CITY OF MOSCOW
LILLY ST. RECONSTRUCTION
'A' ST. TO THIRD ST.

LIEUALLEN STREET
PLAN VIEW

PROJ NO:	46016.01
DESIGNED BY:	AJD
DRAWN BY:	TJF
CHECKED BY:	AJD
DWG NAME:	46016.01PL01.DWG
DATE:	11-21-2022
SHEET NO:	C5

NOTES:

1. PRESERVE AND PROTECT ALL CONCRETE STEPS, PADS, WALKWAY, LANDSCAPING AND RETAINING WALLS BEHIND NEW BACK OF WALK.
2. ADJUST ALL UTILITIES TO GRADE. WORK CONSIDERED INCIDENTAL TO PAVING.
3. PRESERVE AND PROTECT ALL EXISTING TREES UNLESS OTHERWISE NOTED.
4. MATCH EXISTING PRIVATE WALKWAYS WITH PROPOSED SIDEWALK.
5. CONTRACTOR TO PERFORM WALKTHROUGH WITH ENGINEER AFTER DEMOLITION AND PRIOR TO EXCAVATION OR SETTING FORMS FOR SIDEWALK. APPROXIMATELY 100 CY OF FILL REQUIRED FOR SIDEWALK. ASPHALT GRINDINGS OR EXISTING ROAD BASE MAY BE USED FOR THIS FILL.
6. ADD ALTERNATE #1 INCLUDES ALL WORK BETWEEN STA 41+25 AND 43+94, NORTH OF THE PROPOSED ORNAMENTAL FENCE.

GRAPHIC SCALE

10 0 5 10 20

(IN FEET)

11x17 SCALE 1" = 20 ft.
22X34 SCALE 1" = 10 ft.

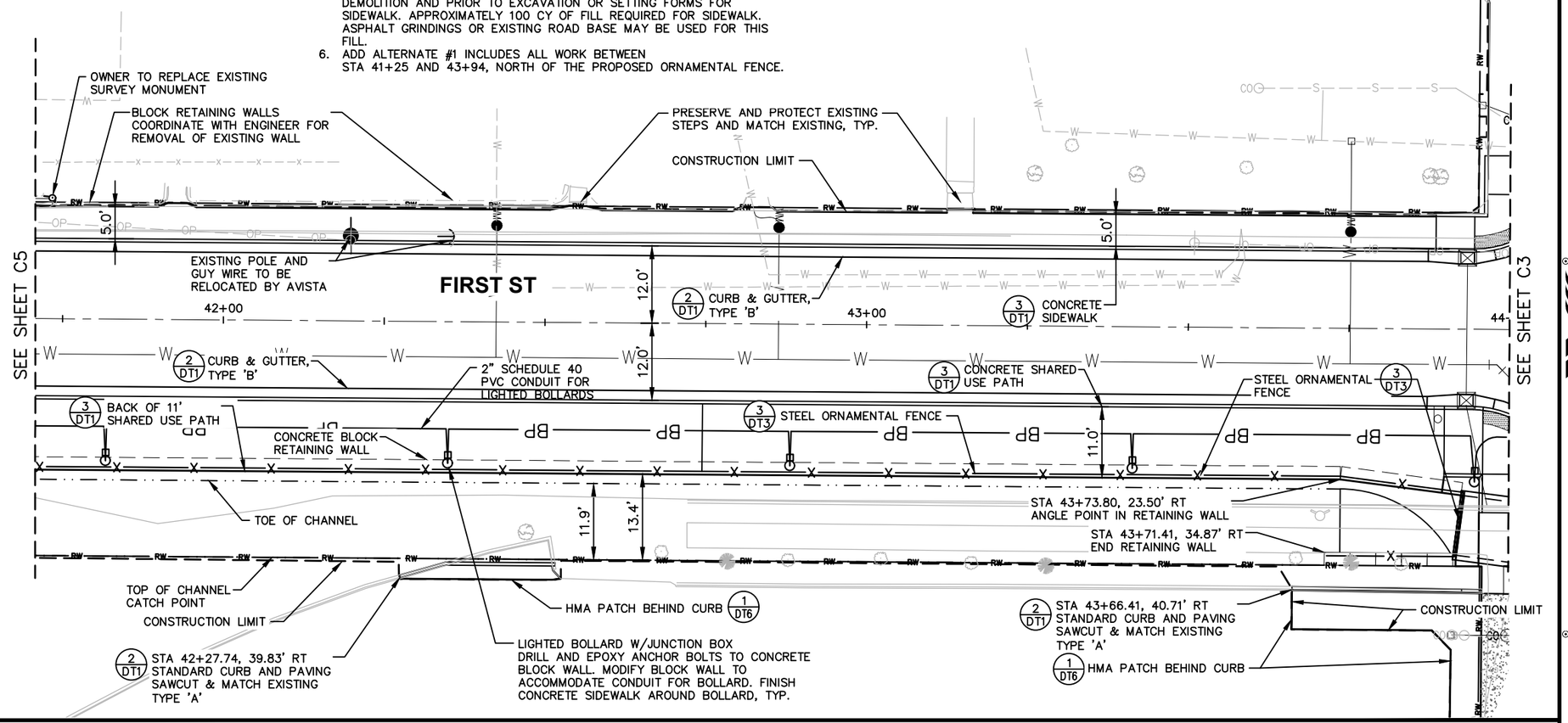

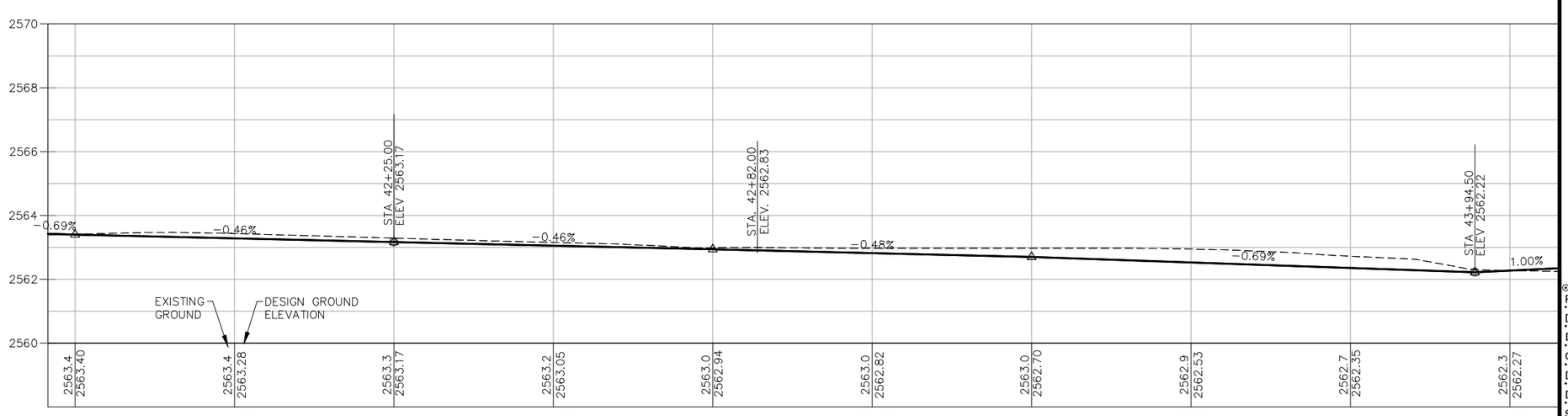

UNDERGROUND SERVICE ALERT
ONE-CALL NUMBER
811
CALL TWO BUSINESS DAYS BEFORE YOU DIG

COPYRIGHT 2022
Welch~Comer & Associates, Inc.
This document, and ideas and designs incorporated herein, as an instrument of professional service, is the property of Welch~Comer & Associates, Inc., and is not to be used in whole or in part for any other project without the written authorization of Welch~Comer & Associates, Inc.

PROFESSIONAL ENGINEER LICENSED 15695 STATE OF IDAHO ADAM J DORSEY

11/30/22

WELCH-COMER ENGINEERS | SURVEYORS
www.welchcomer.com 208-664-9382
330 E. Lakeside Ave, Suite 101 (toll free) 877-815-5672
Coeur d'Alene, ID 83814 (fax) 208-664-5946

NO.	DATE	REVISION DESCRIPTION	BY

CITY OF MOSCOW

LILLY ST. RECONSTRUCTION
'A' ST. TO THIRD ST.

FIRST STREET
PLAN VIEW

PROJ NO:	46016.01
DESIGNED BY:	AJD
DRAWN BY:	TJF
CHECKED BY:	AJD
DWG NAME:	46016.01PL01.DWG
DATE:	11-21-2022
SHEET NO:	C6

UNDERGROUND SERVICE ALERT
ONE-CALL NUMBER
811
CALL TWO BUSINESS DAYS BEFORE YOU DIG

COPYRIGHT 2022
Welch-Comer & Associates, Inc.
This document, and ideas and designs incorporated herein, as an instrument of professional service, is the property of Welch-Comer & Associates, Inc., and is not to be used in whole or in part for any other project without the written authorization of Welch-Comer & Associates, Inc.

PROFESSIONAL ENGINEER
LICENSED
15695
STATE OF IDAHO
ADAM J DORSEY
11/30/22

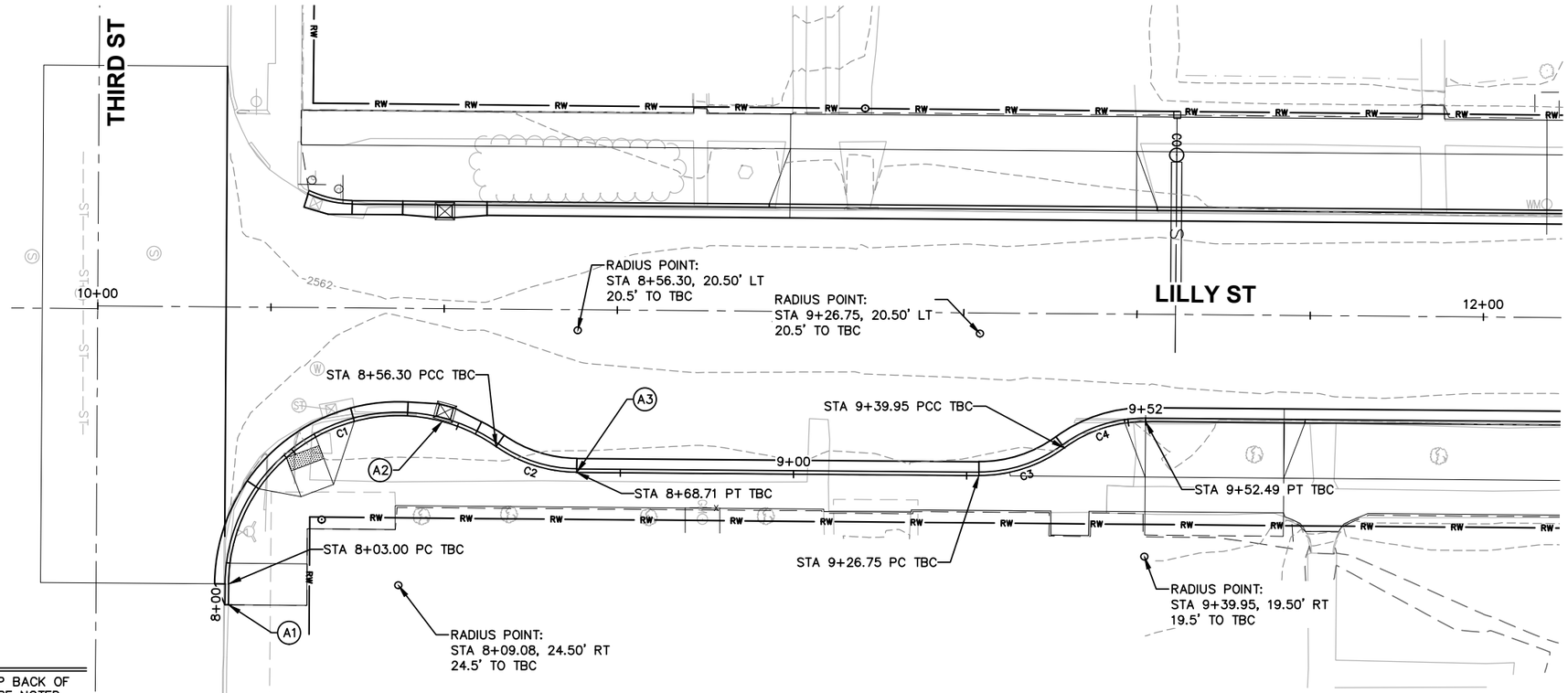

NOTES:

1. ALL CURB OFFSETS AND ELEVATIONS ARE TO TOP BACK OF CURB, WITH NO DROPS SHOWN, UNLESS OTHERWISE NOTED.
2. AT INTERSECTIONS, STRAIGHT GRADING THE SIDEWALK FROM BACK OF CURB TO BACK OF WALK MAY NOT PROVIDE THE NECESSARY CROSS-SLOPES REQUIRED FOR THE ACCESSIBLE ROUTE. SLIGHT GRADE BREAKS MAY BE REQUIRED. CONTRACTOR SHALL VERIFY GRADES AND DIMENSIONS SHOWN PRIOR TO CONSTRUCTION.
3. CONTRACTOR SHALL PROVIDE POSITIVE DRAINAGE ON ALL SIDEWALK AND CURB. SIDEWALK SHALL NOT DRAIN TO PRIVATE PROPERTY.

CURVE TABLE

CURVE NO.	RADIUS	DELTA	LENGTH	CHORD BEARING	CHORD LENGTH
C1	24.50'	124°38'52"	53.30'	S27°10'23"E	43.39'
C2	20.50'	34°41'32"	12.41'	N17°48'17"E	12.22'
C3	20.50'	36°52'12"	13.19'	N17°58'34"W	12.97'
C4	19.50'	36°52'12"	12.55'	N17°58'34"W	12.33'

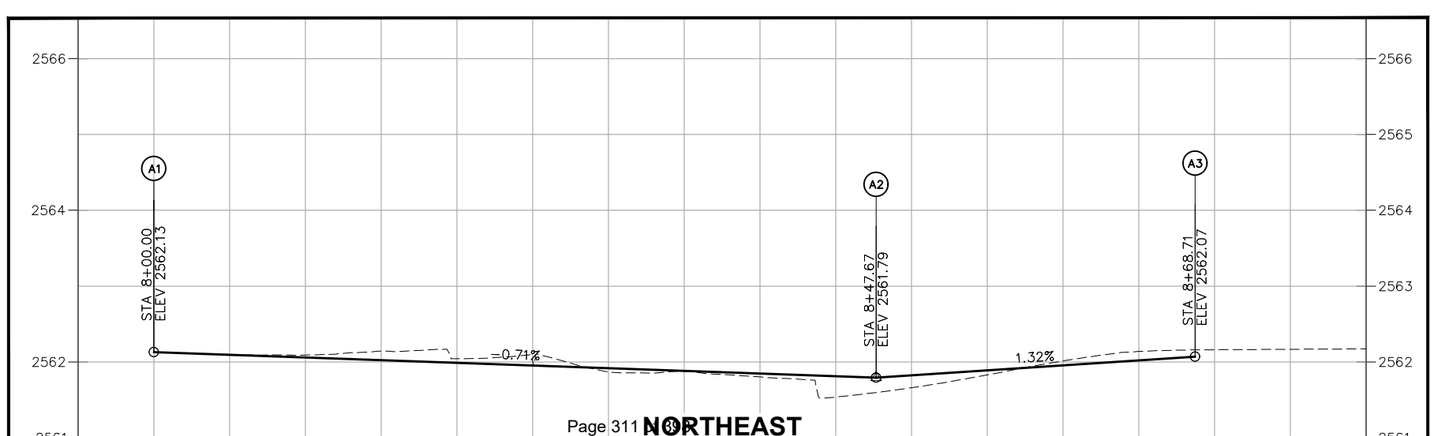

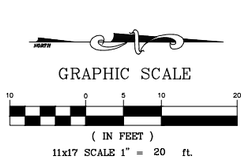

WELCH-COMER
ENGINEERS | SURVEYORS
www.welchcomer.com
330 E. Lakeside Ave, Suite 101
Coeur d'Alene, ID 83814
208-664-9382
(toll free) 877-815-5672
(fax) 208-664-5946

NO.	DATE	REVISION DESCRIPTION	BY

CITY OF MOSCOW
LILLY ST. RECONSTRUCTION
'A' ST. TO THIRD ST.

INTERSECTION PLAN
LILLY & THIRD

PROJ NO:	46016.01
DESIGNED BY:	AJD
DRAWN BY:	TJF
CHECKED BY:	AJD
DWG NAME:	46016.01PL02.DWG
DATE:	01-07-2022
SHEET NO:	C7

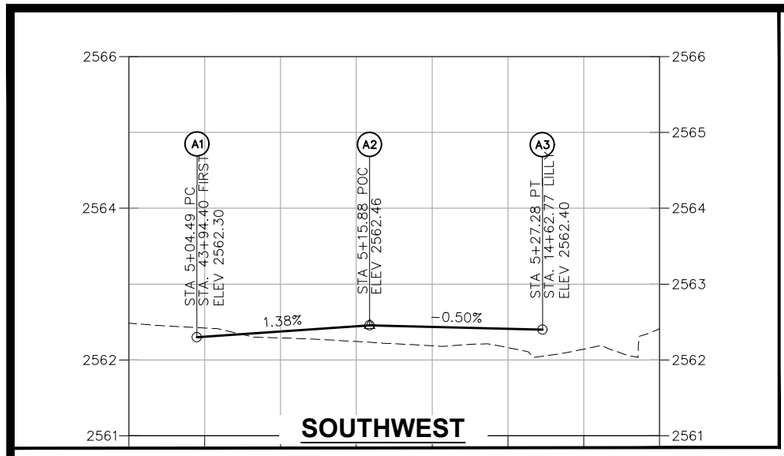

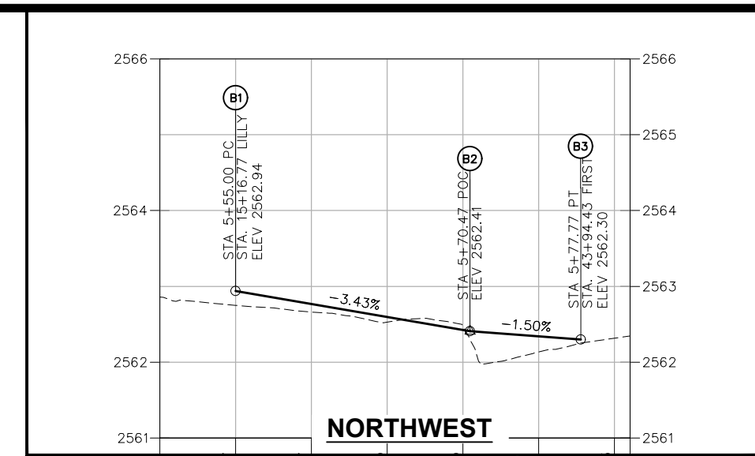

COPYRIGHT 2022
Welch~Comer & Associates, Inc.
This document, and ideas and designs incorporated herein, as an instrument of professional service, is the property of Welch~Comer & Associates, Inc., and is not to be used in whole or in part for any other project without the written authorization of Welch~Comer & Associates, Inc.

PROFESSIONAL ENGINEER
LICENSED
15695
STATE OF IDAHO
ADAM J DORSEY

11/30/22

UNDERGROUND SERVICE ALERT
ONE-CALL NUMBER
811
CALL TWO BUSINESS DAYS BEFORE YOU DIG

GRAPHIC SCALE
10 0 5 10 20
(IN FEET)
11x17 SCALE 1" = 20 ft.
22X34 SCALE 1" = 10 ft.

CURVE TABLE					
CURVE NO.	RADIUS	DELTA	LENGTH	CHORD BEARING	CHORD LENGTH
C5	14.50'	90°01'46"	22.78'	N44°33'22"W	20.51'
C6	14.50'	89°57'22"	22.77'	N45°26'51"E	20.50'

NOTES:

1. ALL CURB OFFSETS AND ELEVATIONS ARE TO TOP BACK OF CURB, WITH NO DROPS SHOWN, UNLESS OTHERWISE NOTED.
2. AT INTERSECTIONS, STRAIGHT GRADING THE SIDEWALK FROM BACK OF CURB TO BACK OF WALK MAY NOT PROVIDE THE NECESSARY CROSS-SLOPES REQUIRED FOR THE ACCESSIBLE ROUTE. SLIGHT GRADE BREAKS MAY BE REQUIRED. CONTRACTOR SHALL VERIFY GRADES AND DIMENSIONS SHOWN PRIOR TO CONSTRUCTION.
3. CONTRACTOR SHALL PROVIDE POSITIVE DRAINAGE ON ALL SIDEWALK AND CURB. SIDEWALK SHALL NOT DRAIN TO PRIVATE PROPERTY.
4. ALL PEDESTRIAN FACILITIES SHALL BE IN ACCORDANCE WITH THE PUBLIC RIGHTS OF WAY ACCESSIBILITY GUIDELINES (PROWAG) WHEREVER POSSIBLE TO THE MAXIMUM EXTENT FEASIBLE, INCLUDING ACCESSIBLE ROUTES INCLUDE A 4' WIDE MINIMUM WITH A MAXIMUM CROSS-SLOPE OF 2% AND A MAXIMUM LONGITUDINAL SLOPE OF 5% WHERE THE ROAD PROFILE EXCEEDS 5%, THE SIDEWALK LONGITUDINAL SLOPE CAN MATCH THE GRADE OF THE ROAD. AT INTERSECTIONS, STRAIGHT GRADING THE SIDEWALK FROM BACK OF CURB TO BACK OF WALK MAY NOT PROVIDE THE NECESSARY CROSS-SLOPES REQUIRED FOR THE ACCESSIBLE ROUTE. SLIGHT GRADE BREAKS MAY BE REQUIRED. CONTRACTOR SHALL VERIFY GRADES AND DIMENSIONS SHOWN PRIOR TO CONSTRUCTION.

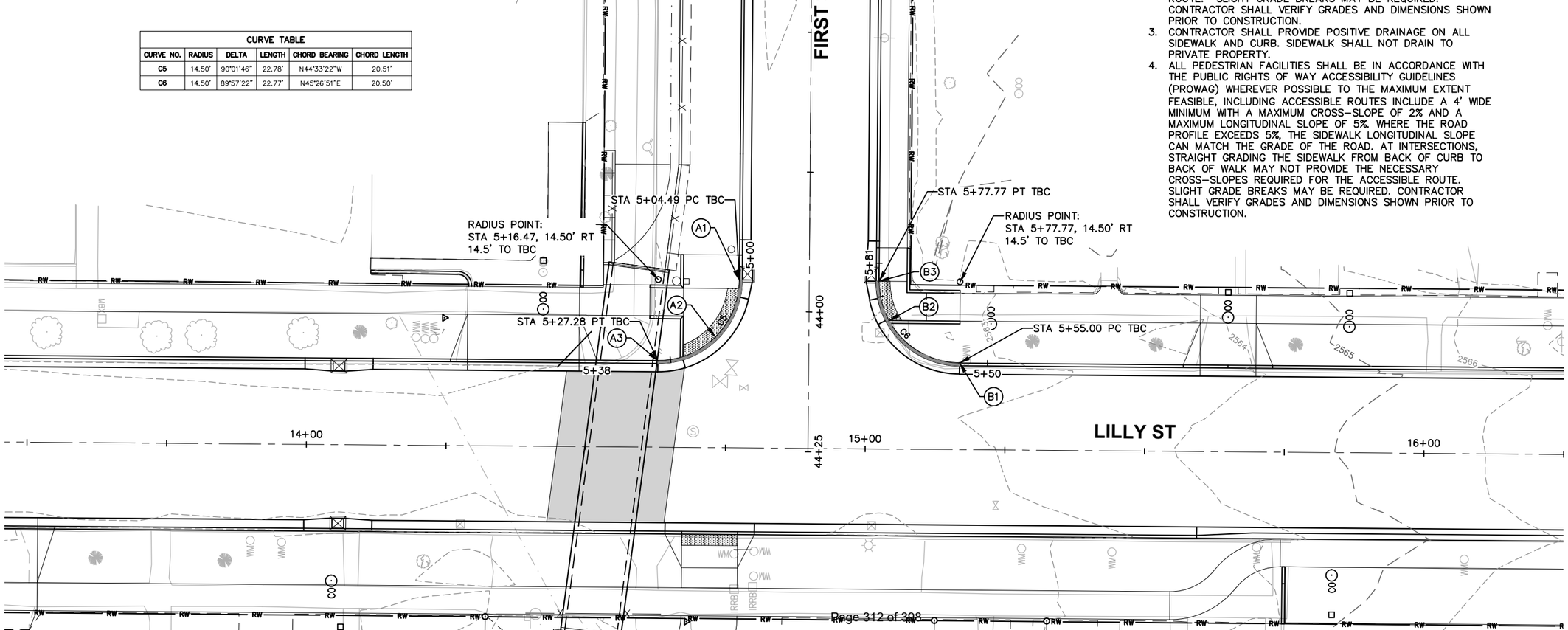

WELCH-COMER
ENGINEERS | SURVEYORS
www.welchcomer.com
330 E. Lakeside Ave, Suite 101
Coeur d'Alene, ID 83814
208-664-9382
(toll free) 877-815-5672
(fax) 208-664-5946

NO.	DATE	REVISION DESCRIPTION	BY

CITY OF MOSCOW
LILLY ST. RECONSTRUCTION
'A' ST. TO THIRD ST.

INTERSECTION PLAN
LILLY & FIRST

PROJ NO:	46016.01
DESIGNED BY:	AJD
DRAWN BY:	TJF
CHECKED BY:	AJD
DWG NAME:	46016.01PL02.DWG
DATE:	01-07-2022
SHEET NO:	C8

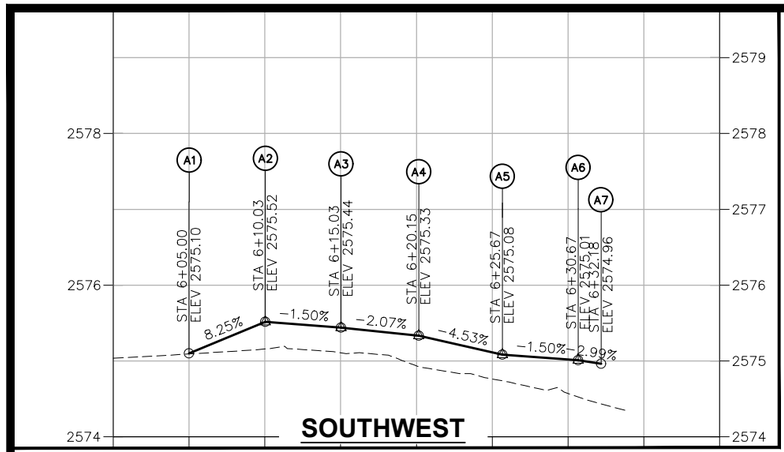

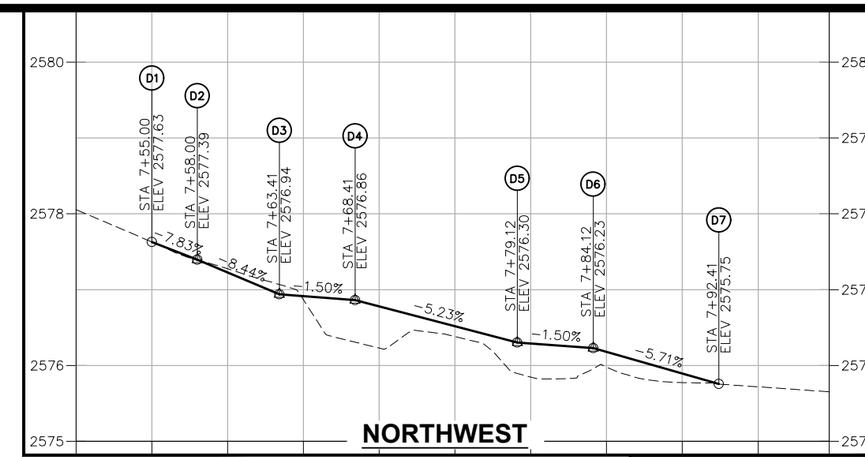

COPYRIGHT 2022
Welch~Comer & Associates, Inc.
This document, and ideas and designs incorporated herein, as an instrument of professional service, is the property of Welch~Comer & Associates, Inc., and is not to be used in whole or in part for any other project without the written authorization of Welch~Comer & Associates, Inc.

PROFESSIONAL ENGINEER LICENSED 15695 STATE OF IDAHO ADAM J DORSEY

11/30/22

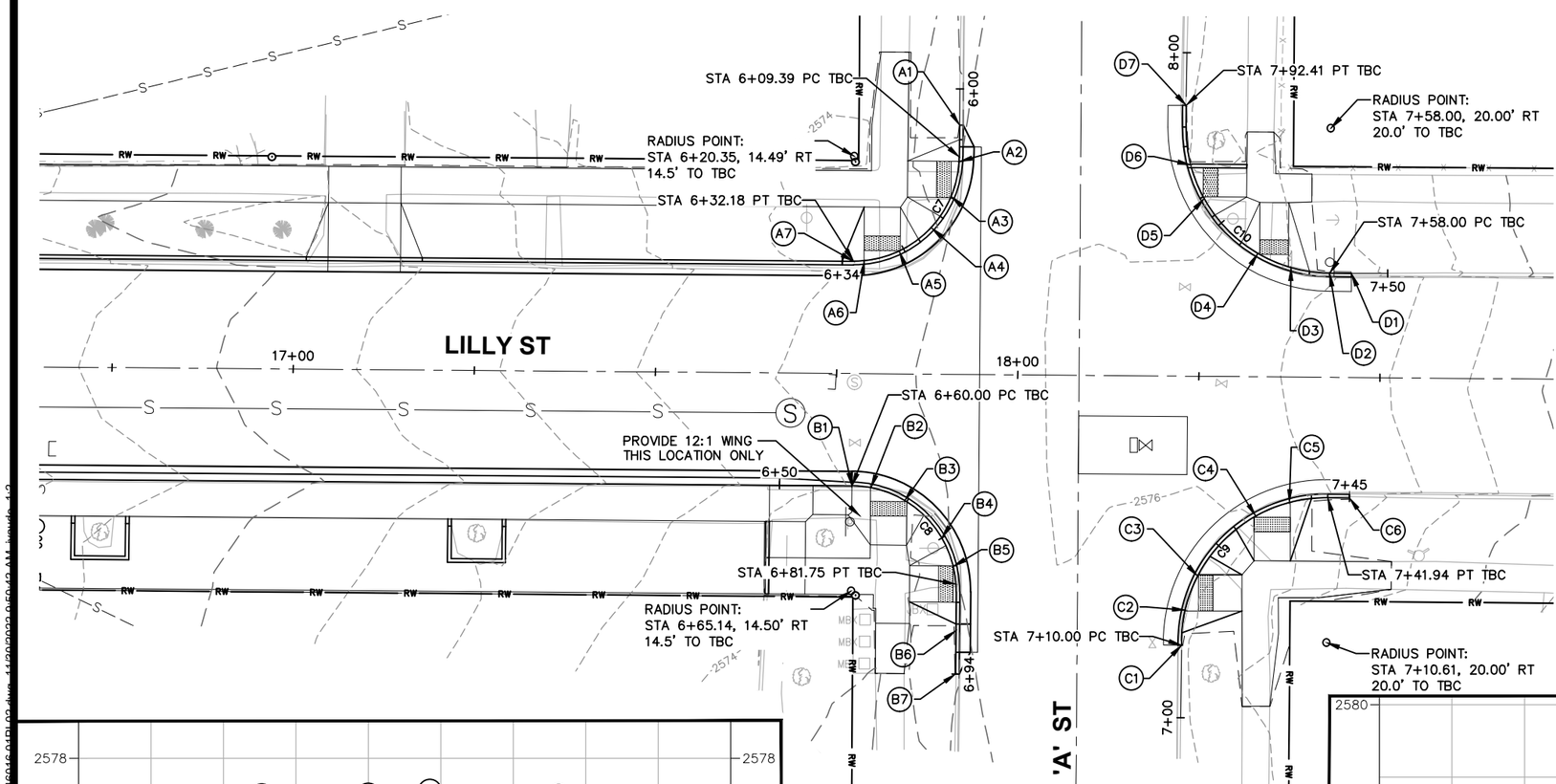

UNDERGROUND SERVICE ALERT
ONE-CALL NUMBER
811
CALL TWO BUSINESS DAYS BEFORE YOU DIG

GRAPHIC SCALE
(IN FEET)
11x17 SCALE 1" = 20 ft.
22X34 SCALE 1" = 10 ft.

NOTES:

1. ALL CURB OFFSETS AND ELEVATIONS ARE TO TOP BACK OF CURB, WITH NO DROPS SHOWN, UNLESS OTHERWISE NOTED.
2. AT INTERSECTIONS, STRAIGHT GRADING THE SIDEWALK FROM BACK OF CURB TO BACK OF WALK MAY NOT PROVIDE THE NECESSARY CROSS-SLOPES REQUIRED FOR THE ACCESSIBLE ROUTE. SLIGHT GRADE BREAKS MAY BE REQUIRED. CONTRACTOR SHALL VERIFY GRADES AND DIMENSIONS SHOWN PRIOR TO CONSTRUCTION.
3. CONTRACTOR SHALL PROVIDE POSITIVE DRAINAGE ON ALL SIDEWALK AND CURB. SIDEWALK SHALL NOT DRAIN TO PRIVATE PROPERTY.

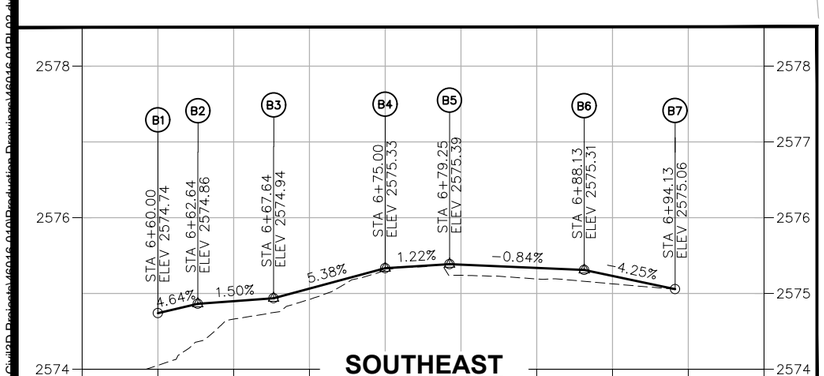

CURVE TABLE					
CURVE NO.	RADIUS	DELTA	LENGTH	CHORD BEARING	CHORD LENGTH
C7	14.50'	90°01'46"	22.78'	N44°33'22"W	20.51'
C8	14.50'	89°58'14"	22.77'	S45°26'38"W	20.50'
C9	20.00'	89°44'25"	31.33'	S44°24'41"E	28.22'
C10	20.00'	89°58'14"	31.41'	N45°26'38"E	28.28'

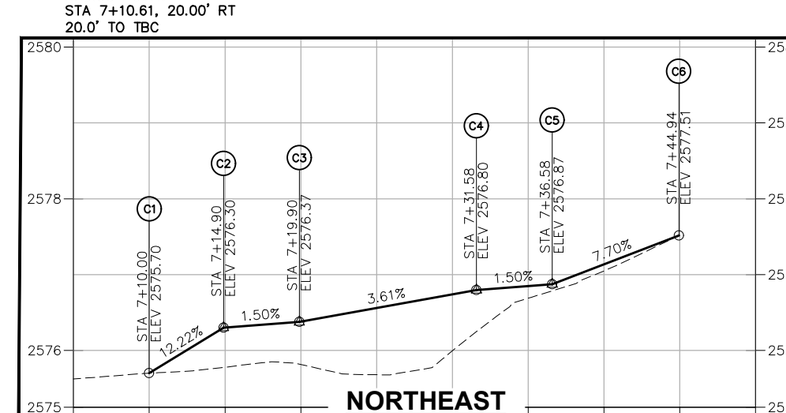

WELCH-COMER
ENGINEERS | SURVEYORS
www.welchcomer.com
330 E. Lakeside Ave, Suite 101
Coeur d'Alene, ID 83814
208-664-9382
(toll free) 877-815-5672
(fax) 208-664-5946

NO.	DATE	REVISION DESCRIPTION	BY

CITY OF MOSCOW

LILLY ST. RECONSTRUCTION
'A' ST. TO THIRD ST.

INTERSECTION PLAN
LILLY & 'A' ST

PROJ NO:	46016.01
DESIGNED BY:	AJD
DRAWN BY:	TJF
CHECKED BY:	AJD
DWG NAME:	46016.01PL02.DWG
DATE:	01-07-2022
SHEET NO:	C9

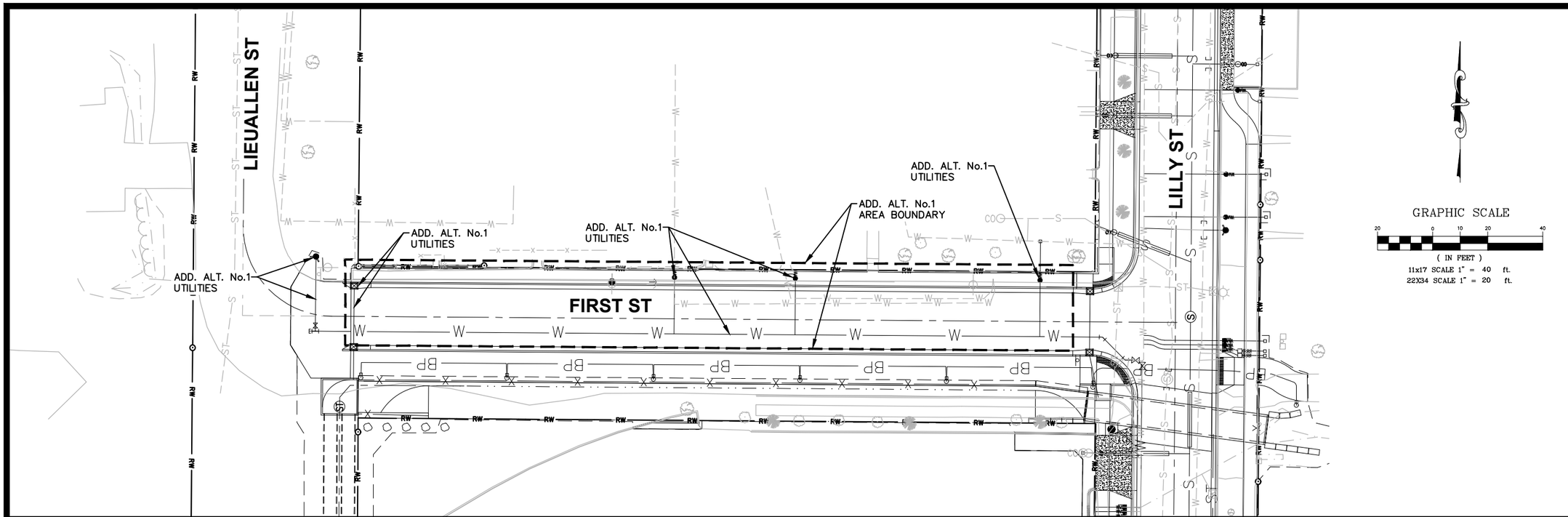

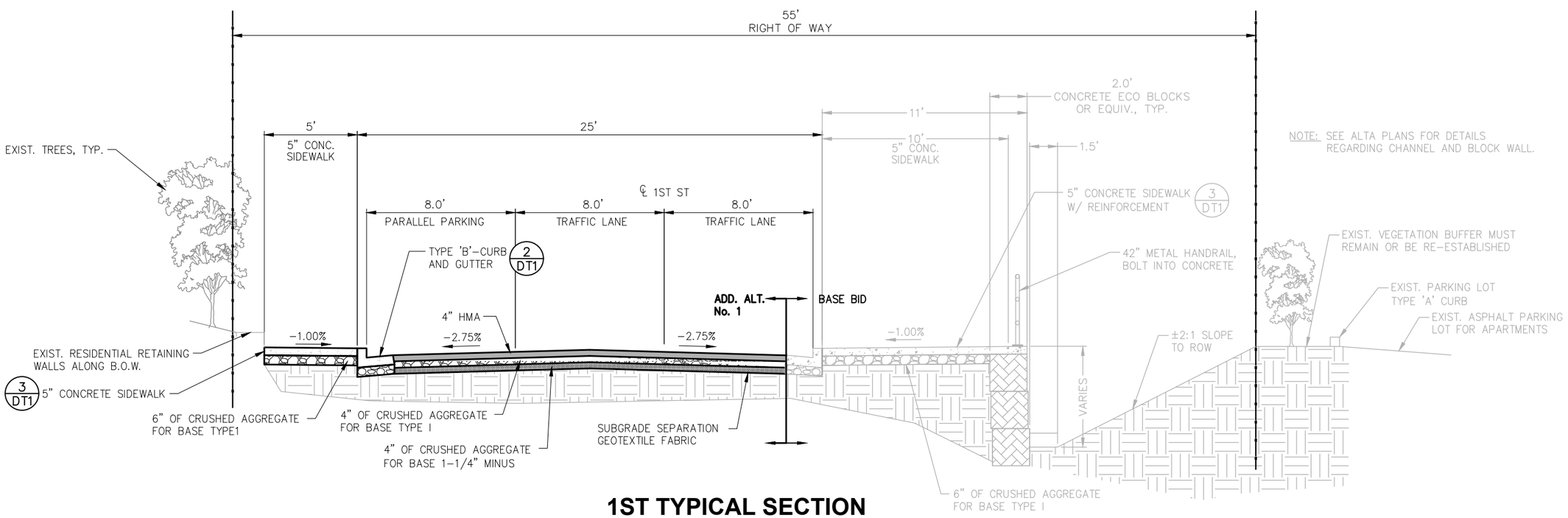

1ST TYPICAL SECTION

ADD. ALT. No.1 LIMITS, SEE SHEET A6 FOR BASE BID

STA. 41+20 TO 43+88

COPYRIGHT 2022
Welch-Comer & Associates, Inc.
This document, and ideas and designs incorporated herein, as an instrument of professional service, is the property of Welch-Comer & Associates, Inc., and is not to be used in whole or in part for any other project without the written authorization of Welch-Comer & Associates, Inc.

PROFESSIONAL ENGINEER LICENSED 15695 STATE OF IDAHO ADAM J DORSEY

11/30/22

WELCH-COMER
ENGINEERS | SURVEYORS
www.welchcomer.com
330 E. Lakeside Ave, Suite 101
Coeur d'Alene, ID 83814
208-664-9382
(toll free) 877-815-5672
(fax) 208-664-5946

NO.	DATE	REVISION DESCRIPTION	BY

CITY OF MOSCOW

LILLY ST. RECONSTRUCTION 'A' ST. TO THIRD ST.

ADD. ALT. NO.1 OVERVIEW AND TYPICAL SECTION

PROJ NO:	46016.01
DESIGNED BY:	AJD
DRAWN BY:	TJF
CHECKED BY:	AJD
DWG NAME:	46016.01PL03.DWG
DATE:	11-21-2022
SHEET NO:	C10

N:\Civil3D Projects\46016.010\Production Drawings\46016.01PL03.dwg, 11/30/2022 9:11:14 AM, jyaude, 1:2

UNDERGROUND SERVICE ALERT
ONE-CALL NUMBER
811
CALL TWO BUSINESS DAYS BEFORE YOU DIG

NOTES:
SEE SHEET S2 FOR NOTES

GRAPHIC SCALE
(IN FEET)
11x17 SCALE 1" = 20 ft.
22X34 SCALE 1" = 10 ft.

STA 10+08.14, 2.65' LT
DOGHOUSE MH
RIM=MATCH EXISTING ASPHALT ELEVATION

10+33.83, 5.50' RT (10 DT1)(11 DT1)
SAN MH 02

STA 10+08.07, 7.65' LT
REMOVE EXISTING SMH, REPLACE WITH NEW PIPE, BACKFILL & COMPACT. BYPASS PUMPING REQUIRED WILL BE INCIDENTAL TO REMOVAL OF SMH

STA 10+49.99, 15.00' LT
INSTALL CATCH BASIN AND LID TYPE A GRATE, BI-DIRECTIONAL
RIM = 2561.61
IN OUT = 2559.11 E (12")
(13 DT1)(14 DT1)(15 DT1) TYP TYP TYP

4" SEWER SERVICE, RECONNECT TO EXISTING SERVICE FIELD LOCATE. EXPLORATORY EXCAVATION REQUIRED IS CONSIDERED INCIDENTAL TO SERVICE.

STA 12+46.81, 23.00' LT
(16 DT1) 4" SEWER SERVICE, RECONNECT TO EXISTING SERVICE

20' C900 DR25 SLEEVE, CENTERED ON CROSSING, 2 PLACES, TYP.

ABANDON SEWER LINE

10+00 11+00 12+00

LILLY ST

12" STORM PIPE C900 DR25 PVC

PRESERVE STORM MANHOLE & TIE NEW PIPE INTO MANHOLE, GROUT ALL ABANDON PIPES

CUT, CAP, AND ABANDON PIPE, TYP.

8" ASTM D3034 SDR35 PVC
L=228.00, S=0.004

ABANDON WATER LINE

STA 10+49.99, 15.80' RT
INSTALL CATCH BASIN AND LID TYPE A GRATE, BI-DIRECTIONAL
RIM = 2561.29
INV IN = 2558.79 W (12")
INV OUT = 2558.69 S (12")

(10 DT1)(11 DT1) 8" ASTM D3034 SDR35 PVC
L=22.95, S=0.005

REMOVE STORM MANHOLE CUT, CAP, & ABANDON PIPE BACKFILL AND COMPACT

REMOVE CATCH BASIN CUT, CAP, AND ABANDON PIPE BACKFILL AND COMPACT, 2 PLCS., TYP.

THIRD ST

MATCHLINE STA. 12+50

STA 12+26.59, 23.00' RT
(16 DT1) 4" SEWER SERVICE, RECONNECT TO EXISTING SERVICE

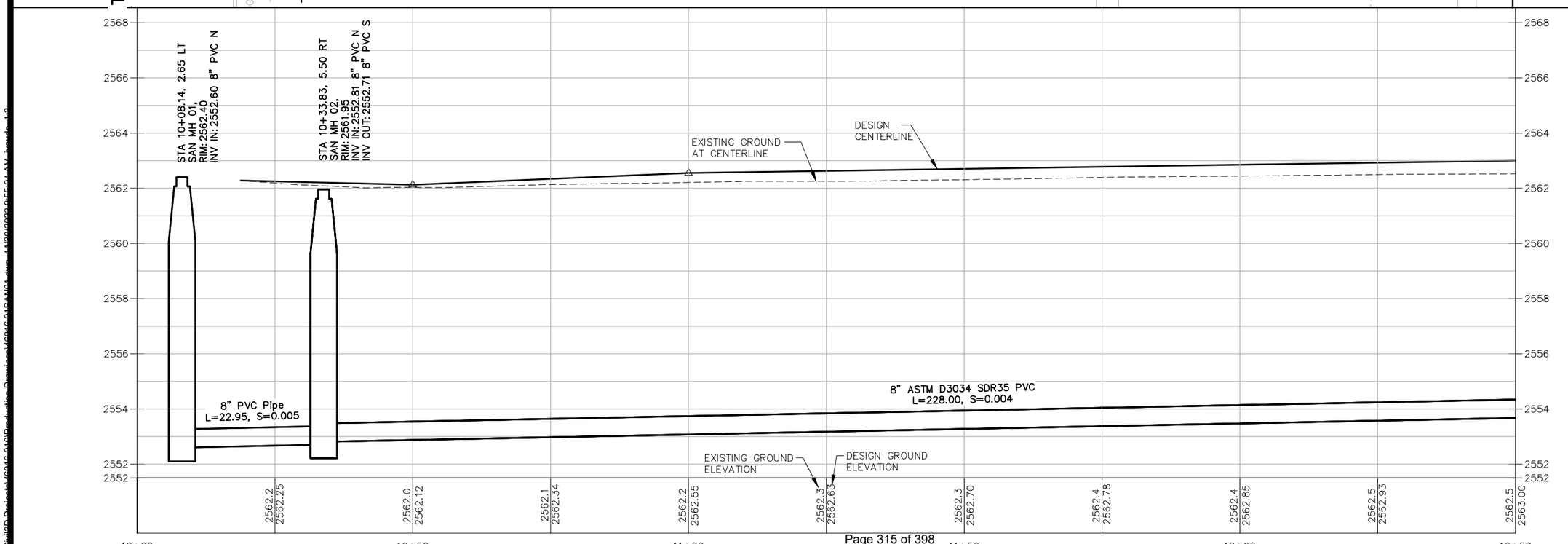

COPYRIGHT 2022
Welch~Comer & Associates, Inc.
This document, and ideas and designs incorporated herein, as an instrument of professional service, is the property of Welch~Comer & Associates, Inc., and is not to be used in whole or in part for any other project without the written authorization of Welch~Comer & Associates, Inc.

PROFESSIONAL ENGINEER
LICENSED
15695
STATE OF IDAHO
ADAM J DORSEY
11/30/22

WELCH-COMER
ENGINEERS | SURVEYORS
www.welchcomer.com
330 E. Lakeside Ave, Suite 101
Coeur d'Alene, ID 83814
208-664-9382
(toll free) 877-815-5672
(fax) 208-664-5946

NO.	DATE	REVISION DESCRIPTION	BY

CITY OF MOSCOW
LILLY ST. RECONSTRUCTION
'A' ST. TO THIRD ST.

SANITARY & STORM SEWER
PLAN AND PROFILE

PROJ NO:	46016.01
DESIGNED BY:	AJD
DRAWN BY:	TJF
CHECKED BY:	AJD
DWG NAME:	46016.01SAN01.DWG
DATE:	01-06-2022
SHEET NO:	S1

NOTES:

1. SLEEVES NOT REQUIRED IF NON-POTABLE LINES HAVE AT LEAST 18" OF SEPARATION. FIELD VERIFY PRIOR TO INSTALLATION.
2. CONTRACTOR WILL SALVAGE ALL REMOVED MANHOLE LIDS TO CITY.

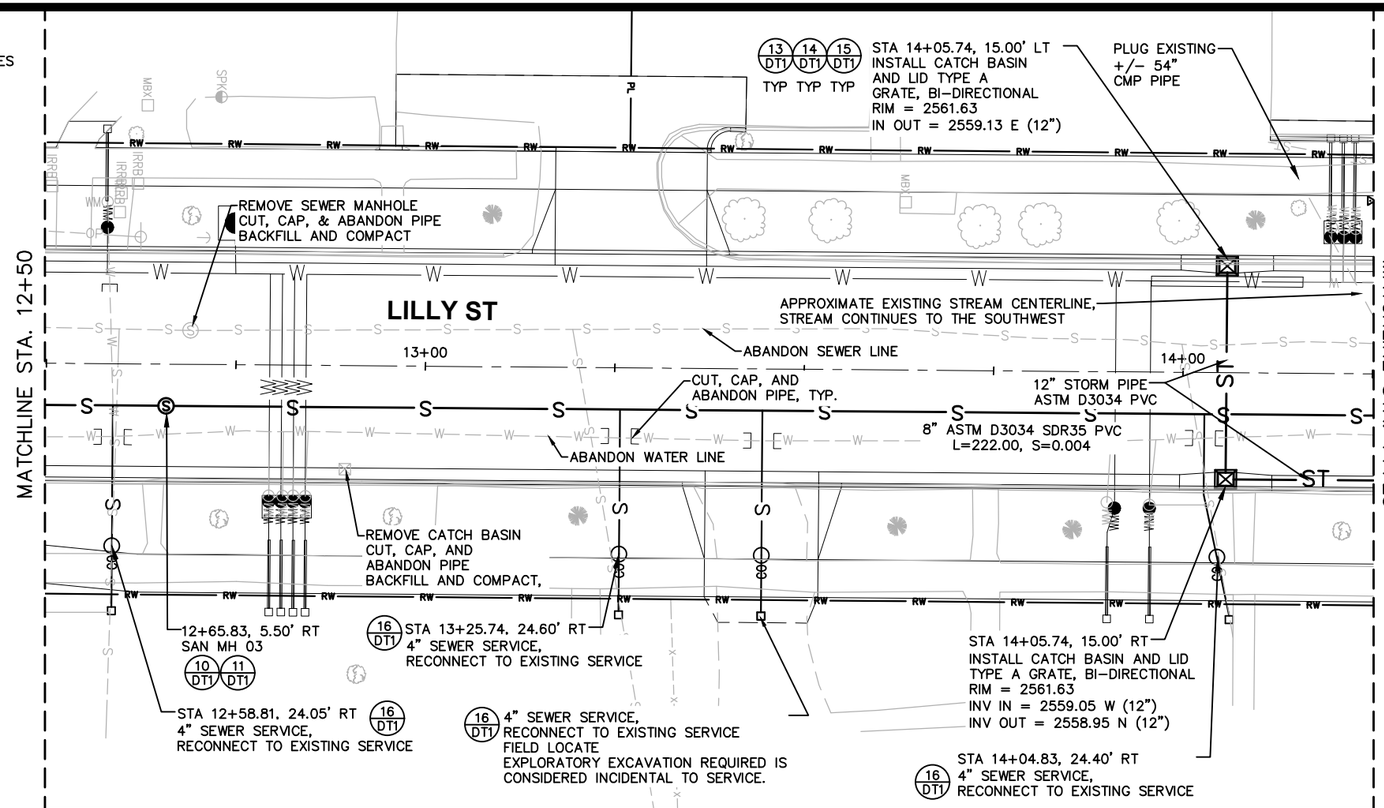

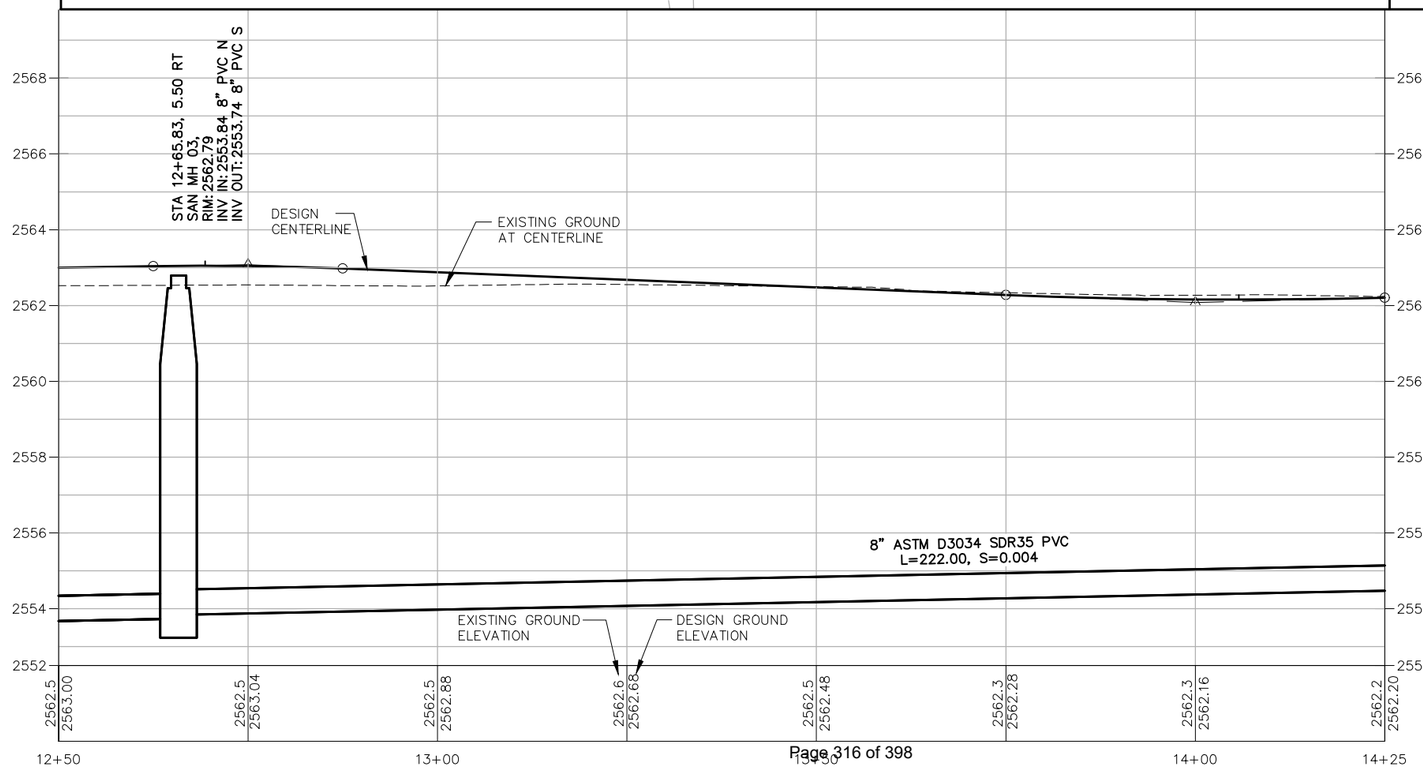

UNDERGROUND SERVICE ALERT
ONE-CALL NUMBER
811
CALL TWO BUSINESS DAYS BEFORE YOU DIG

GRAPHIC SCALE
(IN FEET)
11x17 SCALE 1" = 20 ft.
22X34 SCALE 1" = 10 ft.

COPYRIGHT 2022
Welch-Comer & Associates, Inc.
This document, and ideas and designs incorporated herein, as an instrument of professional service, is the property of Welch-Comer & Associates, Inc., and is not to be used in whole or in part for any other project without the written authorization of Welch-Comer & Associates, Inc.

PROFESSIONAL ENGINEER
LICENSED
15695
STATE OF IDAHO
ADAM J DORSEY

11/30/22

WELCH-COMER
ENGINEERS | SURVEYORS
www.welchcomer.com
330 E. Lakeside Ave, Suite 101
Coeur d'Alene, ID 83814
208-664-9382
(toll free) 877-815-5672
(fax) 208-664-5946

NO.	DATE	REVISION DESCRIPTION	BY

CITY OF MOSCOW
LILLY ST. RECONSTRUCTION
'A' ST. TO THIRD ST.

SANITARY & STORM SEWER
PLAN AND PROFILE

PROJ NO:	46016.01
DESIGNED BY:	AJD
DRAWN BY:	TJF
CHECKED BY:	AJD
DWG NAME:	46016.01SAN01.DWG
DATE:	01-06-2022
SHEET NO:	S2

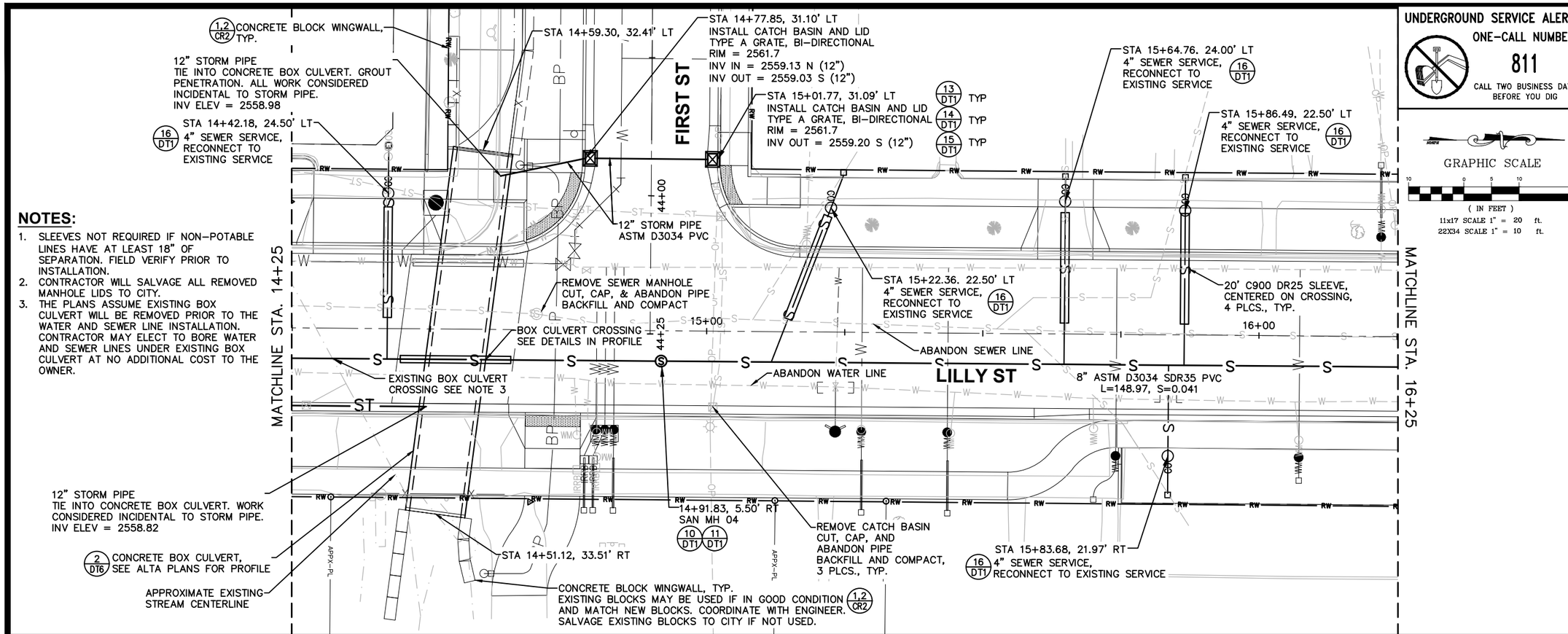

NOTES:

1. SLEEVES NOT REQUIRED IF NON-POTABLE LINES HAVE AT LEAST 18" OF SEPARATION. FIELD VERIFY PRIOR TO INSTALLATION.
2. CONTRACTOR WILL SALVAGE ALL REMOVED MANHOLE LIDS TO CITY.
3. THE PLANS ASSUME EXISTING BOX CULVERT WILL BE REMOVED PRIOR TO THE WATER AND SEWER LINE INSTALLATION. CONTRACTOR MAY ELECT TO BORE WATER AND SEWER LINES UNDER EXISTING BOX CULVERT AT NO ADDITIONAL COST TO THE OWNER.

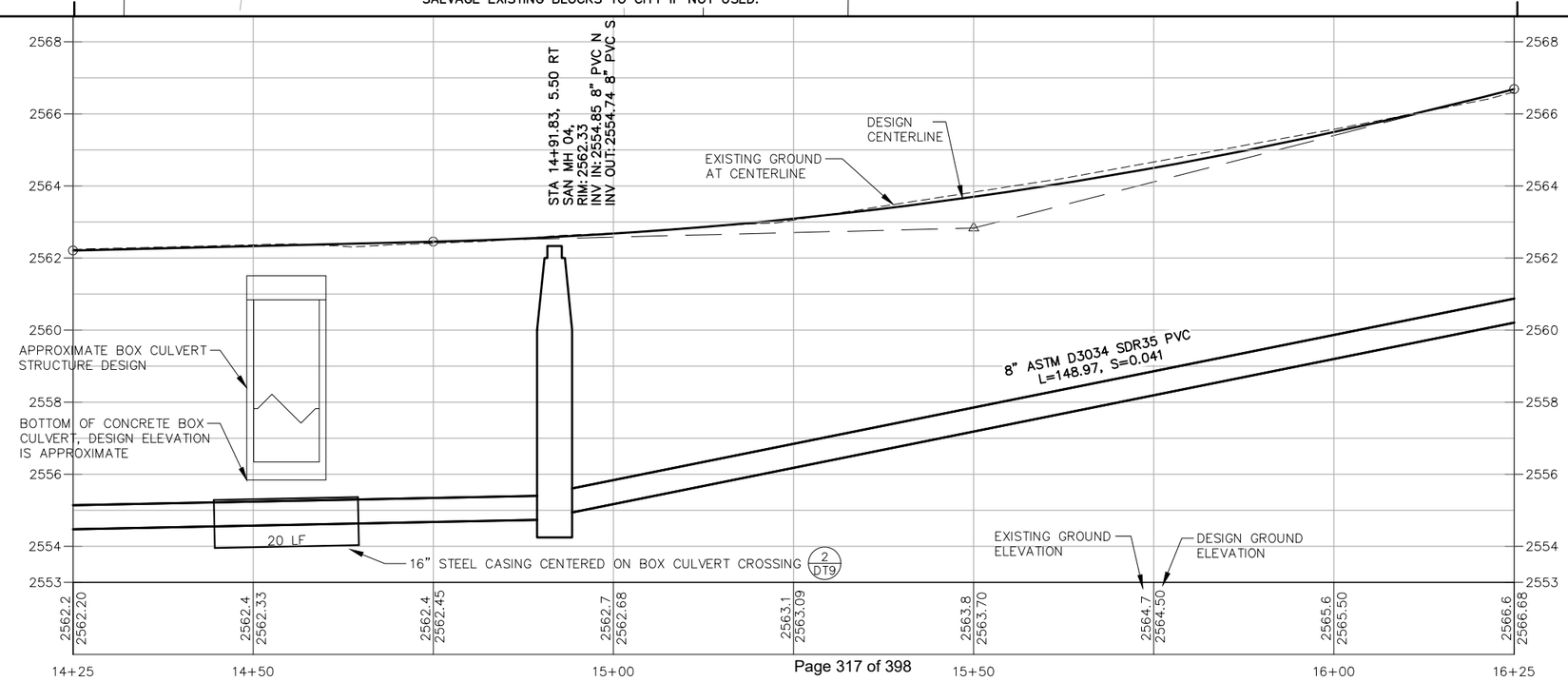

UNDERGROUND SERVICE ALERT
ONE-CALL NUMBER
811
CALL TWO BUSINESS DAYS BEFORE YOU DIG

GRAPHIC SCALE
(IN FEET)
11x17 SCALE 1" = 20 ft.
22X34 SCALE 1" = 10 ft.

COPYRIGHT 2022
Welch-Comer & Associates, Inc.
This document, and ideas and designs incorporated herein, as an instrument of professional service, is the property of Welch-Comer & Associates, Inc., and is not to be used in whole or in part for any other project without the written authorization of Welch-Comer & Associates, Inc.

PROFESSIONAL ENGINEER LICENSED 15695 STATE OF IDAHO ADAM J DORSEY
11/30/22

WELCH-COMER
ENGINEERS | SURVEYORS
www.welchcomer.com 208-664-9382
330 E. Lakeside Ave, Suite 101 (toll free) 877-815-5672
Coeur d'Alene, ID 83814 (fax) 208-664-5946

NO.	DATE	REVISION DESCRIPTION	BY

CITY OF MOSCOW
LILLY ST. RECONSTRUCTION
'A' ST. TO THIRD ST.

SANITARY & STORM SEWER
PLAN AND PROFILE

PROJ NO:	46016.01
DESIGNED BY:	AJD
DRAWN BY:	TJF
CHECKED BY:	AJD
DWG NAME:	46016.01SAN01.DWG
DATE:	11-21-2022
SHEET NO:	S3

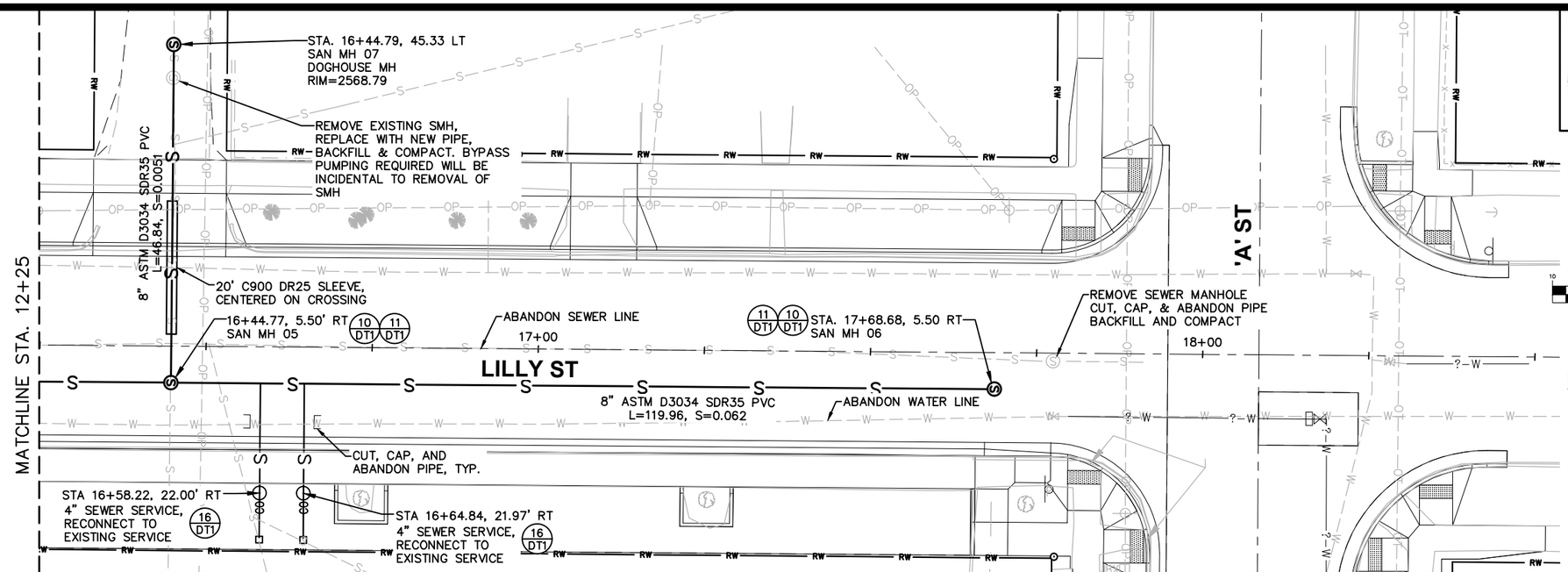

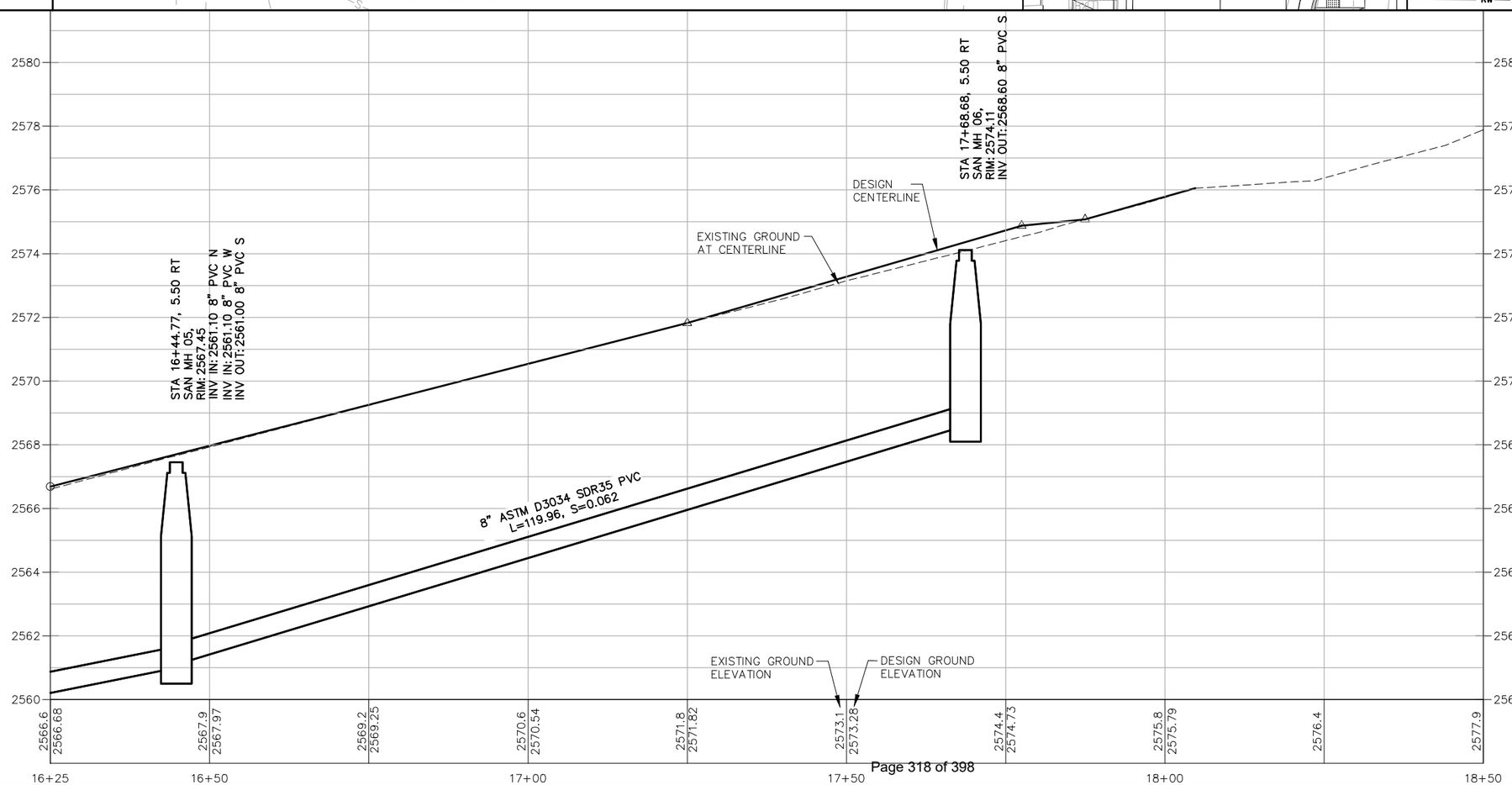

UNDERGROUND SERVICE ALERT
ONE-CALL NUMBER
811
CALL TWO BUSINESS DAYS BEFORE YOU DIG

GRAPHIC SCALE
(IN FEET)
11x17 SCALE 1" = 20 ft.
22X34 SCALE 1" = 10 ft.

NOTES:
SEE SHEET S2 FOR NOTES

COPYRIGHT 2022
Welch~Comer & Associates, Inc.
This document, and ideas and designs incorporated herein, as an instrument of professional service, is the property of Welch~Comer & Associates, Inc., and is not to be used in whole or in part for any other project without the written authorization of Welch~Comer & Associates, Inc.

PROFESSIONAL ENGINEER
LICENSED
15695
STATE OF IDAHO
ADAM J DORSEY
11/30/22

WELCH-COMER
ENGINEERS | SURVEYORS
www.welchcomer.com
330 E. Lakeside Ave, Suite 101
Coeur d'Alene, ID 83814
208-664-9382
(toll free) 877-815-5672
(fax) 208-664-5946

NO.	DATE	REVISION DESCRIPTION	BY

CITY OF MOSCOW
LILLY ST. RECONSTRUCTION
'A' ST. TO THIRD ST.

SANITARY & STORM SEWER
PLAN AND PROFILE

PROJ NO:	46016.01
DESIGNED BY:	AJD
DRAWN BY:	TJF
CHECKED BY:	AJD
DWG NAME:	46016.01SAN01.DWG
DATE:	01-06-2022
SHEET NO:	S4

NOTES:

SEE SHEET S2 FOR NOTES

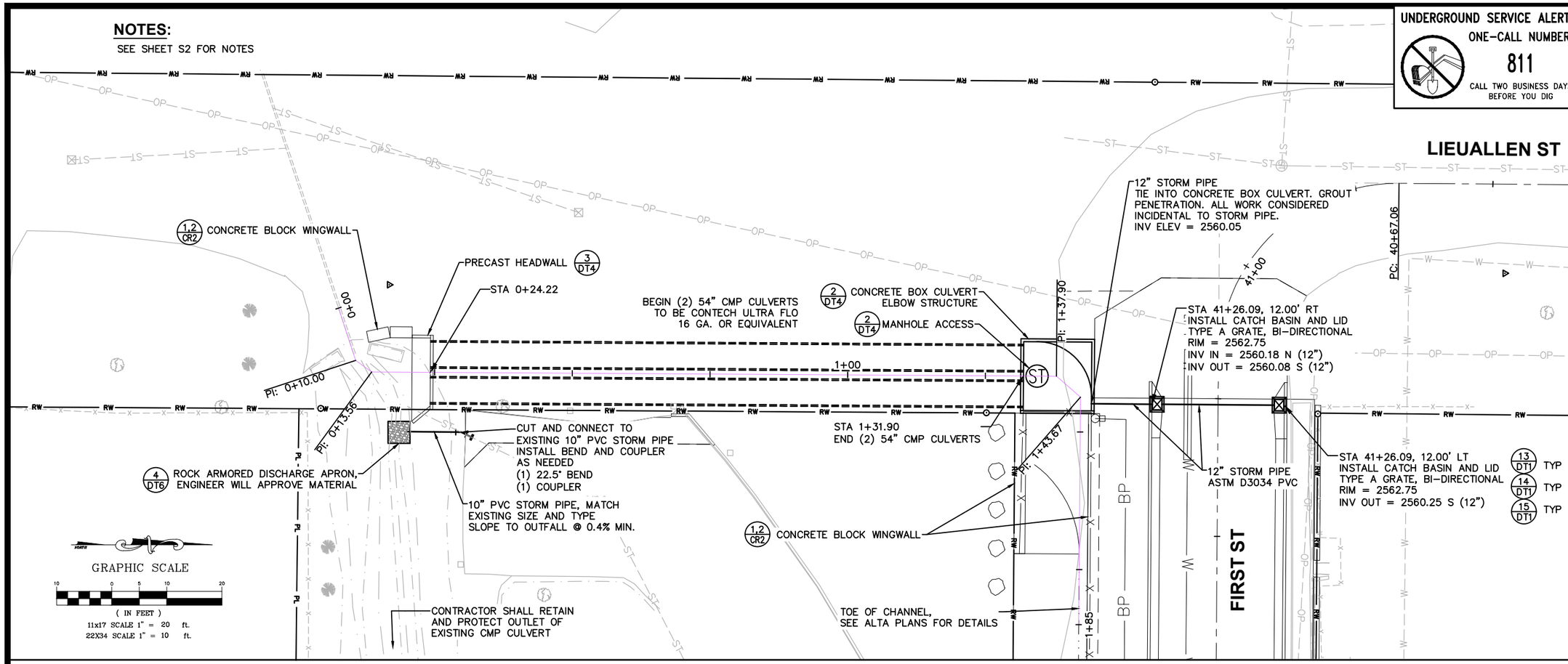

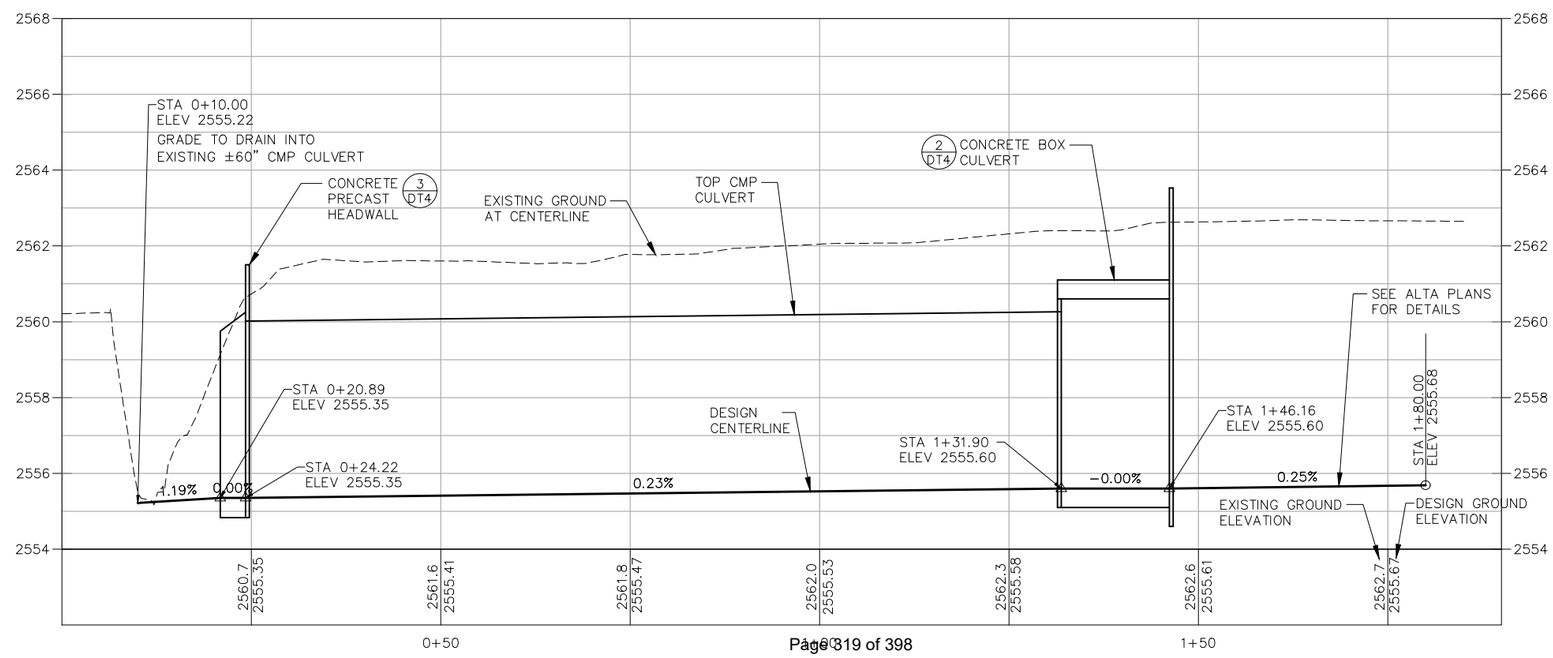

UNDERGROUND SERVICE ALERT
ONE-CALL NUMBER
811
CALL TWO BUSINESS DAYS BEFORE YOU DIG

COPYRIGHT 2022
Welch~Comer & Associates, Inc.
This document, and ideas and designs incorporated herein, as an instrument of professional service, is the property of Welch~Comer & Associates, Inc., and is not to be used in whole or in part for any other project without the written authorization of Welch~Comer & Associates, Inc.

PROFESSIONAL ENGINEER
LICENSED
15695
STATE OF IDAHO
ADAM J DORSEY

11/30/22

WELCH-COMER
ENGINEERS | SURVEYORS
www.welchcomer.com
330 E. Lakeside Ave, Suite 101
Coeur d'Alene, ID 83814
208-664-9382
(toll free) 877-815-5672
(fax) 208-664-5946

NO.	DATE	REVISION DESCRIPTION	BY

CITY OF MOSCOW

LILLY ST. RECONSTRUCTION
'A' ST. TO THIRD ST.

SANITARY & STORM SEWER
PLAN AND PROFILE

PROJ NO:	46016.01
DESIGNED BY:	AJD
DRAWN BY:	TJF
CHECKED BY:	AJD
DWG NAME:	46016.01SAN01.DWG
DATE:	11-21-2022
SHEET NO:	S5

UNDERGROUND SERVICE ALERT
ONE-CALL NUMBER
811
CALL TWO BUSINESS DAYS BEFORE YOU DIG

GRAPHIC SCALE
(IN FEET)
11x17 SCALE 1" = 20 ft.
22X34 SCALE 1" = 10 ft.

NOTES:
SEE SHEET W2 FOR NOTES

THIRD ST
SAWCUT
403 DT8 TYP STA 10+19.04, 12.01' LT
CONNECT INTO EXISTING 8" PVC WATERLINE AND INSTALL TEE AND VALVE
EXPLORATORY EXCAVATION
(1) 8" x 8" TEE
(2) 8" GATE VALVE
(1) 8" COUPLER
THRUST BLOCK
8" PVC WATERLINE
CONNECT TO EXISTING 6" LINE (MATERIAL UNKNOWN)
INSTALL TEE AND VALVE
(1) 6" GATE VALVE
(1) 8" x 6" TEE
THRUST BLOCK
STA 10+18.66, 29.27' RT
INSTALL VALVE
(1) 8" GATE VALVE
TIE INTO EXISTING TEE
STA 10+25.78, 27.25' RT
FIRE HYDRANT ASSEMBLY
400.2 DT8
403 DT8
REMOVE EXISTING FIRE HYDRANT, VALVE CAN, CUT, CAP AND ABANDON 6" LINE
8" PVC WATERLINE
ABANDON SEWER LINE
11+00
LILLY ST
12+00
REMOVE EXISTING WATER VAULT ON ABANDONED LINE, CAP LINES, BACKFILL AND COMPACT.
ABANDON WATER LINE
CUT, CAP AND ABANDON, TYP.
STA 12+09.03, 18.20' LT
(1) 1" WATER SERVICE RECONNECT
SEE NOTES ON SHEET W2
400.1 DT2 TYP STA 12+16.11, 18.00' RT
(1) 1" WATER SERVICE RECONNECT
SEE NOTES ON SHEET W2
PRESERVE AND PROTECT TREES, TYP.
MATCHLINE STA. 12+50

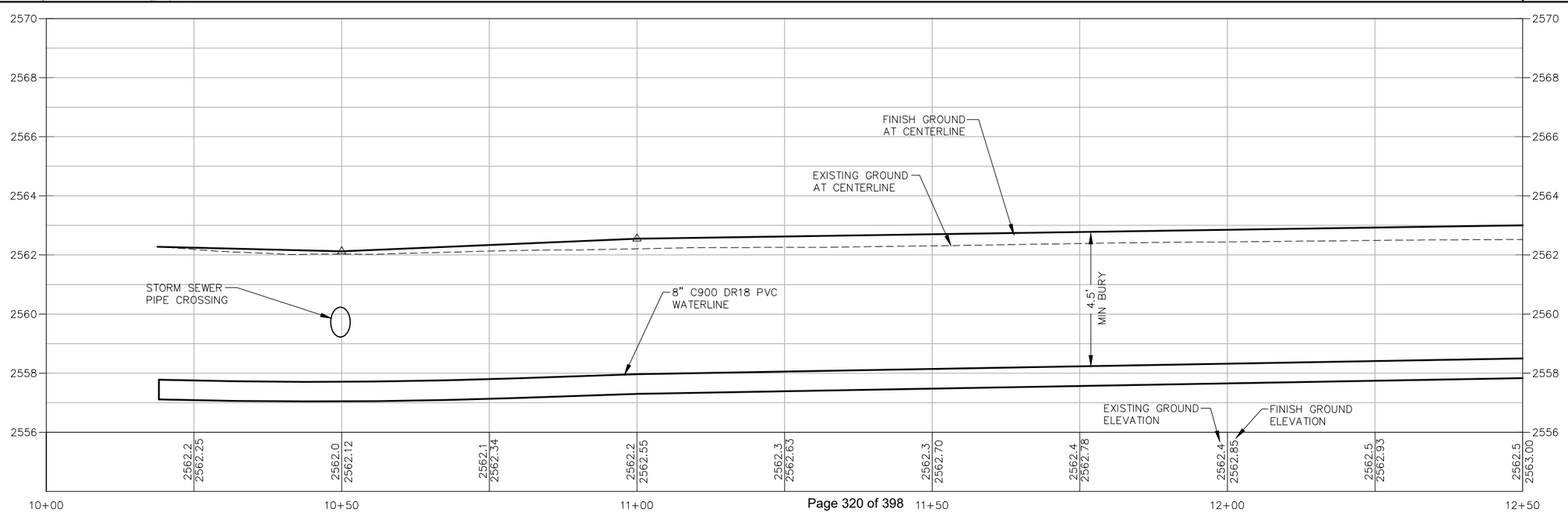

COPYRIGHT 2022
Welch~Comer & Associates, Inc.
This document, and ideas and designs incorporated herein, as an instrument of professional service, is the property of Welch~Comer & Associates, Inc., and is not to be used in whole or in part for any other project without the written authorization of Welch~Comer & Associates, Inc.

PROFESSIONAL ENGINEER LICENSED 15695 STATE OF IDAHO ADAM J DORSEY
11/30/22

WELCH-COMER
ENGINEERS | SURVEYORS
www.welchcomer.com 208-664-9382
330 E. Lakeside Ave, Suite 101 (toll free) 877-815-5672
Coeur d'Alene, ID 83814 (fax) 208-664-5946

NO.	DATE	REVISION DESCRIPTION	BY

CITY OF MOSCOW
LILLY ST. RECONSTRUCTION
'A' ST. TO THIRD ST.

WATERLINE
PLAN AND PROFILE

PROJ NO:	46016.01
DESIGNED BY:	AJD
DRAWN BY:	TJF
CHECKED BY:	AJD
DWG NAME:	46016.01WT01.DWG
DATE:	11-22-2022
SHEET NO:	W1

NOTES:

1. IF A GREEN STRIP EXISTS BETWEEN CURB AND SIDEWALK, CONTRACTOR WILL PROVIDE A 2" CONDUIT UNDER SIDEWALK. CONDUIT CONSIDERED INCIDENTAL TO WATER SERVICE.
2. MAINTAIN EXISTING WATER SERVICES IN PLACE UNTIL NEW MAIN IS TESTED AND APPROVED.
3. CONTRACTOR WILL SALVAGE ALL REMOVED HYDRANTS, METERS AND METER LIDS TO THE CITY.
4. REMOVAL OR ABANDONMENT OF EXISTING WATER LINES AND APPURTENANCES IS CONSIDERED INCIDENTAL TO INSTALLATION OF THE WATERLINE.
5. PLAN SHOWN ASSUMES EXISTING BOX CULVERT WILL BE REMOVED PRIOR TO WATERLINE INSTALLATION. CONTRACTOR MAY ELECT TO BORE WATERLINE UNDER EXISTING BOX CULVERT AT NO ADDITIONAL COST TO OWNER.
5. SPACE SERVICE TAPS AT THE MAIN IN ACCORDANCE WITH MANUFACTURER'S SPECIFICATIONS.
6. FINAL METER LOCATIONS TO BE APPROVED BY THE CITY.

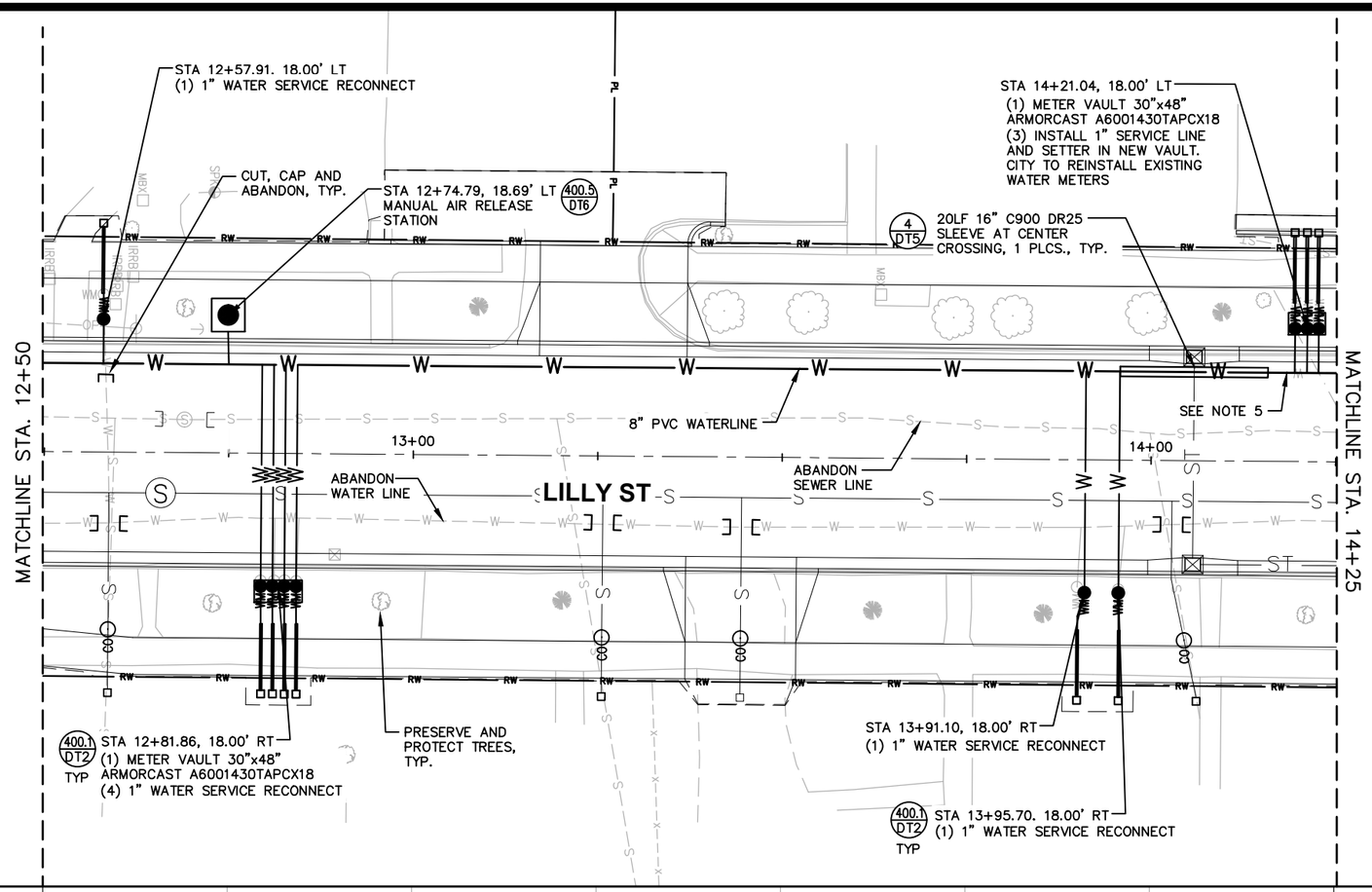

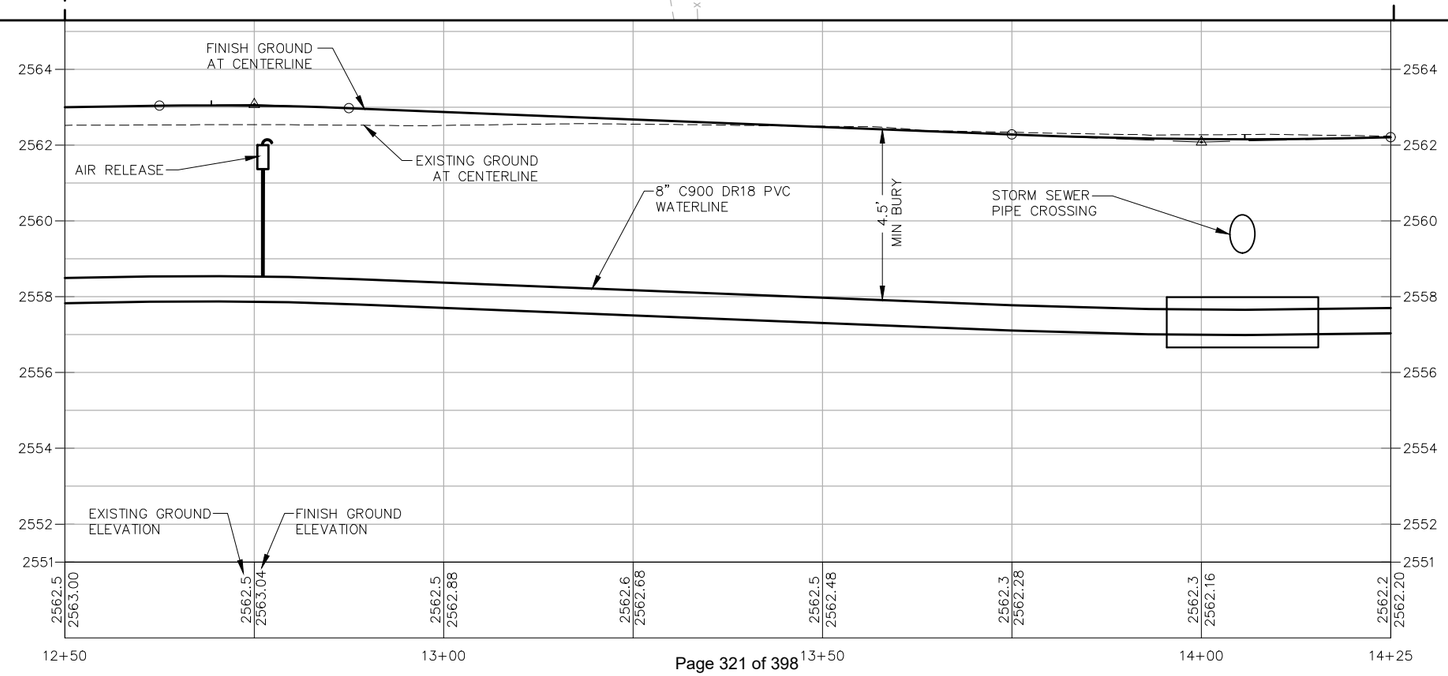

UNDERGROUND SERVICE ALERT
ONE-CALL NUMBER
811
CALL TWO BUSINESS DAYS BEFORE YOU DIG

NORTH

GRAPHIC SCALE
10 0 5 10 20
(IN FEET)
11x17 SCALE 1" = 20 ft.
22X34 SCALE 1" = 10 ft.

COPYRIGHT 2022
Welch~Comer & Associates, Inc.
This document, and ideas and designs incorporated herein, as an instrument of professional service, is the property of Welch~Comer & Associates, Inc., and is not to be used in whole or in part for any other project without the written authorization of Welch~Comer & Associates, Inc.

PROFESSIONAL ENGINEER
LICENSED
15695
STATE OF IDAHO
ADAM J DORSEY

11/30/22

WELCH-COMER
ENGINEERS | SURVEYORS
www.welchcomer.com 208-664-9382
330 E. Lakeside Ave, Suite 101 (toll free) 877-815-5672
Coeur d'Alene, ID 83814 (fax) 208-664-5946

NO.	DATE	REVISION DESCRIPTION	BY

CITY OF MOSCOW
LILLY ST. RECONSTRUCTION
'A' ST. TO THIRD ST.

WATERLINE
PLAN AND PROFILE

PROJ NO:	46016.01
DESIGNED BY:	AJD
DRAWN BY:	TJF
CHECKED BY:	AJD
DWG NAME:	46016.01WT01.DWG
DATE:	01-06-2022
SHEET NO:	W2

GRAPHIC SCALE

(IN FEET)
11x17 SCALE 1" = 20 ft.
22X34 SCALE 1" = 10 ft.

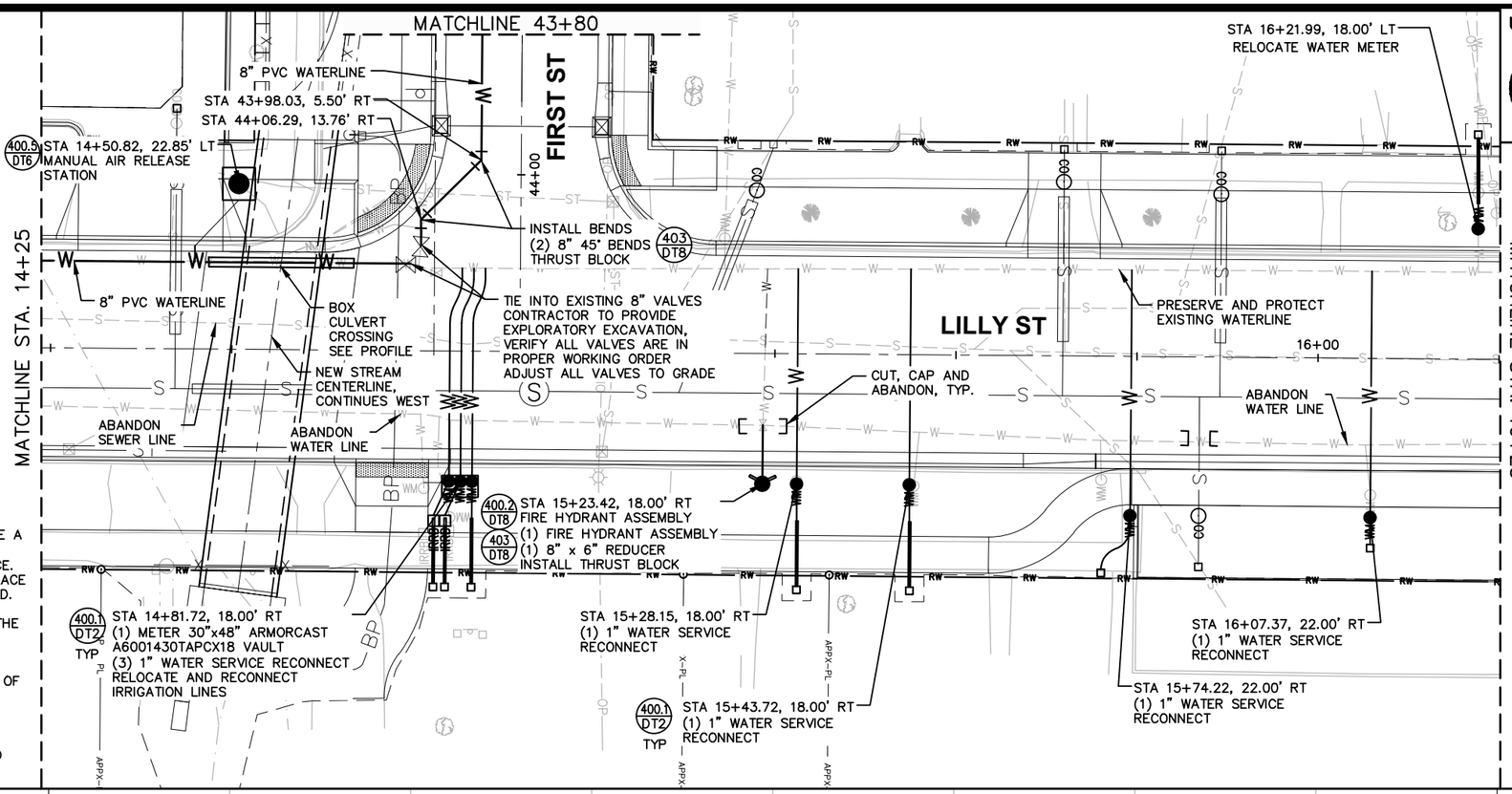

NOTES:

1. IF A GREEN STRIP EXISTS BETWEEN CURB AND SIDEWALK, CONTRACTOR WILL PROVIDE A 2" CONDUIT UNDER SIDEWALK. CONDUIT CONSIDERED INCIDENTAL TO WATER SERVICE.
2. MAINTAIN EXISTING WATER SERVICES IN PLACE UNTIL NEW MAIN IS TESTED AND APPROVED.
3. CONTRACTOR WILL SALVAGE ALL REMOVED HYDRANTS, METERS AND METER LIDS TO THE CITY.
4. REMOVAL OR ABANDONMENT OF EXISTING WATER LINES AND APPURTENANCES IS CONSIDERED INCIDENTAL TO INSTALLATION OF THE WATERLINE.
5. SPACE SERVICE TAPS AT THE MAIN IN ACCORDANCE WITH MANUFACTURER'S SPECIFICATIONS.
6. FINAL METER LOCATIONS TO BE APPROVED BY THE CITY.

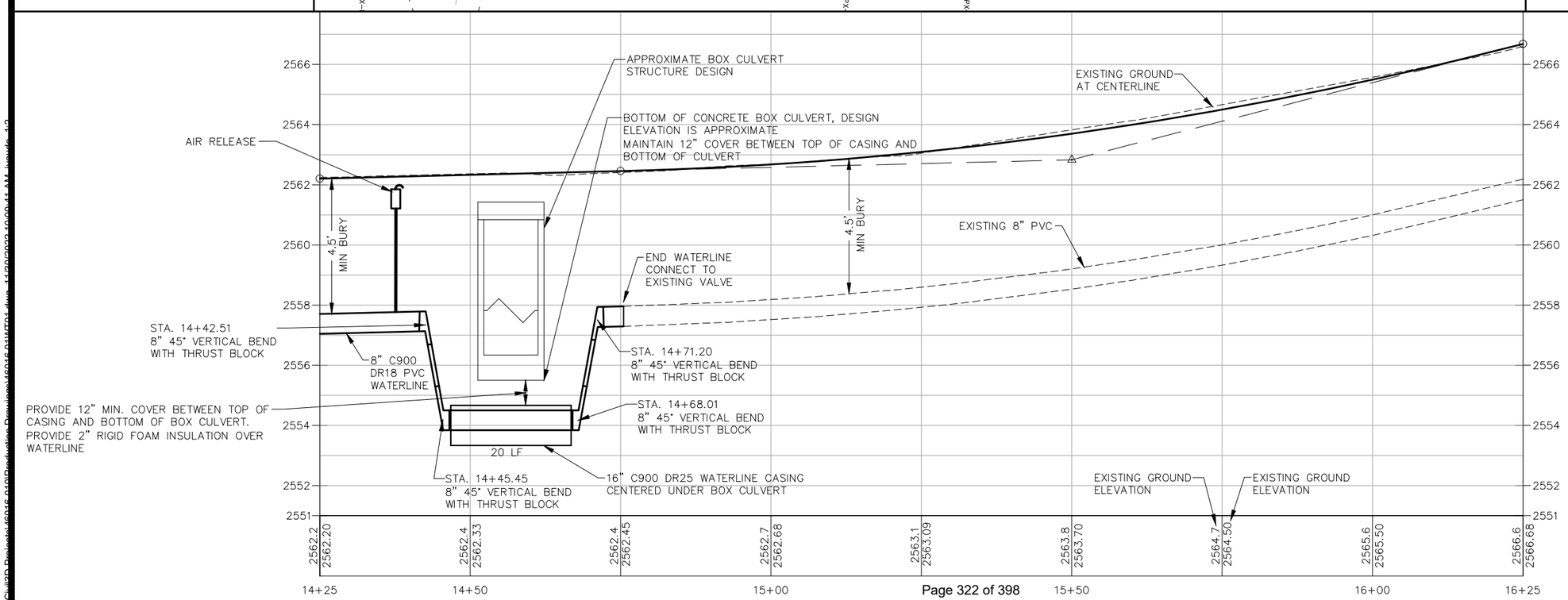

UNDERGROUND SERVICE ALERT
ONE-CALL NUMBER
811
CALL TWO BUSINESS DAYS BEFORE YOU DIG

COPYRIGHT 2022
Welch~Comer & Associates, Inc.
This document, and ideas and designs incorporated herein, as an instrument of professional service, is the property of Welch~Comer & Associates, Inc., and is not to be used in whole or in part for any other project without the written authorization of Welch~Comer & Associates, Inc.

PROFESSIONAL ENGINEER LICENSED 15695 STATE OF IDAHO ADAM J DORSEY

11/30/22

WELCH-COMER
ENGINEERS | SURVEYORS
www.welchcomer.com 208-664-9382
330 E. Lakeside Ave, Suite 101 (toll free) 877-815-5672
Coeur d'Alene, ID 83814 (fax) 208-664-5946

NO.	DATE	REVISION DESCRIPTION	BY

CITY OF MOSCOW
LILLY ST. RECONSTRUCTION
'A' ST. TO THIRD ST.

WATERLINE
PLAN AND PROFILE

PROJ NO:	46016.01
DESIGNED BY:	AJD
DRAWN BY:	TJF
CHECKED BY:	AJD
DWG NAME:	46016.01WT01.DWG
DATE:	01-06-2022
SHEET NO:	W3

NOTES:

1. IF A GREEN STRIP EXISTS BETWEEN CURB AND SIDEWALK, CONTRACTOR WILL PROVIDE A 2" CONDUIT UNDER SIDEWALK. CONDUIT CONSIDERED INCIDENTAL TO WATER SERVICE.
2. MAINTAIN EXISTING WATER SERVICES IN PLACE UNTIL NEW MAIN IS TESTED AND APPROVED.
3. CONTRACTOR WILL SALVAGE ALL REMOVED HYDRANTS, METERS AND METER LIDS TO THE CITY.
4. REMOVAL OR ABANDONMENT OF EXISTING WATER LINES AND APPURTENANCES IS CONSIDERED INCIDENTAL TO INSTALLATION OF THE WATERLINE.
5. SPACE SERVICE TAPS AT THE MAIN IN ACCORDANCE WITH MANUFACTURER'S SPECIFICATIONS.
6. FINAL METER LOCATIONS TO BE APPROVED BY THE CITY.

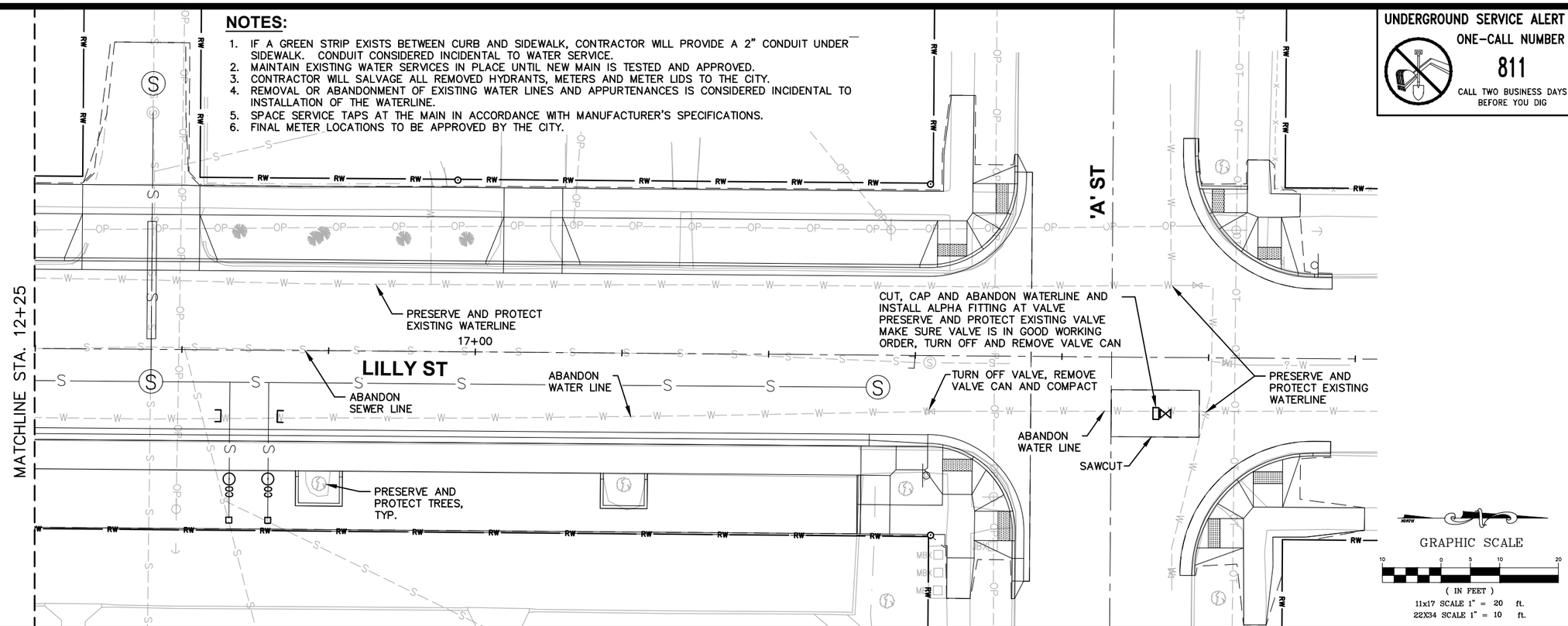

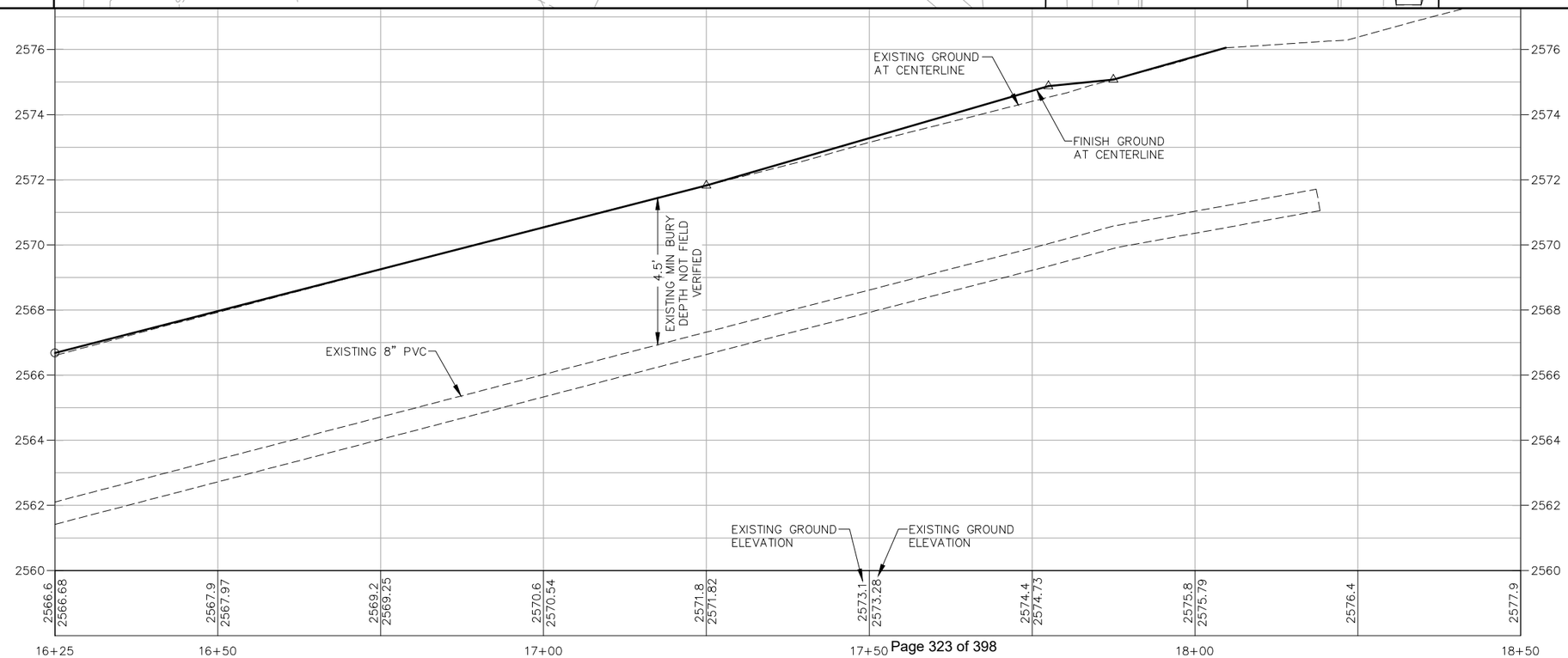

UNDERGROUND SERVICE ALERT
ONE-CALL NUMBER
811
CALL TWO BUSINESS DAYS BEFORE YOU DIG

COPYRIGHT 2022
Welch~Comer & Associates, Inc.
This document, and ideas and designs incorporated herein, as an instrument of professional service, is the property of Welch~Comer & Associates, Inc., and is not to be used in whole or in part for any other project without the written authorization of Welch~Comer & Associates, Inc.

PROFESSIONAL ENGINEER LICENSED 15695 STATE OF IDAHO ADAM J DORSEY

11/30/22

WELCH-COMER
ENGINEERS | SURVEYORS
www.welchcomer.com
330 E. Lakeside Ave, Suite 101
Coeur d'Alene, ID 83814
208-664-9382
(toll free) 877-815-5672
(fax) 208-664-5946

NO.	DATE	REVISION DESCRIPTION	BY

CITY OF MOSCOW

LILLY ST. RECONSTRUCTION
'A' ST. TO THIRD ST.

WATERLINE
PLAN AND PROFILE

PROJ NO:	46016.01
DESIGNED BY:	AJD
DRAWN BY:	TJF
CHECKED BY:	AJD
DWG NAME:	46016.01WT01.DWG
DATE:	01-14-2021
SHEET NO:	W4

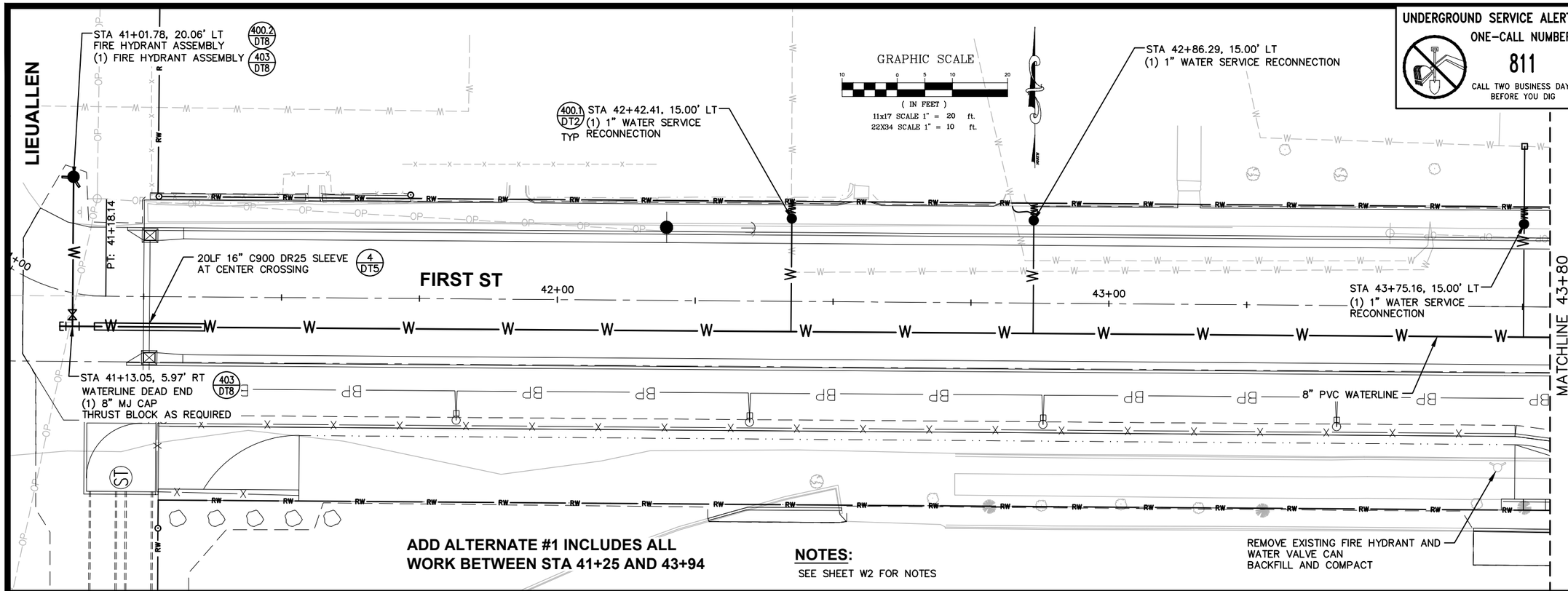

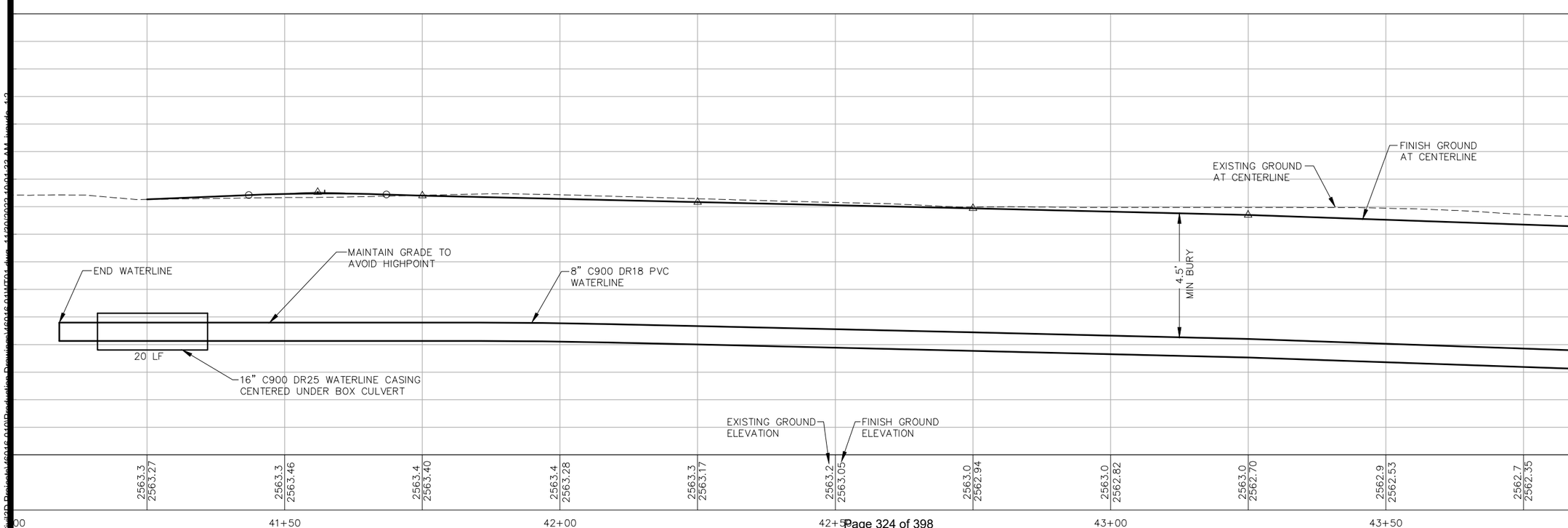

UNDERGROUND SERVICE ALERT
ONE-CALL NUMBER
811
CALL TWO BUSINESS DAYS BEFORE YOU DIG

COPYRIGHT 2022
Welch~Comer & Associates, Inc.
This document, and ideas and designs incorporated herein, as an instrument of professional service, is the property of Welch~Comer & Associates, Inc., and is not to be used in whole or in part for any other project without the written authorization of Welch~Comer & Associates, Inc.

PROFESSIONAL ENGINEER
LICENSED
15695
STATE OF IDAHO
ADAM J DORSEY
11/30/22

WELCH-COMER
ENGINEERS | SURVEYORS
www.welchcomer.com
330 E. Lakeside Ave, Suite 101
Coeur d'Alene, ID 83814
208-664-9382
(toll free) 877-815-5672
(fax) 208-664-5946

NO.	DATE	REVISION DESCRIPTION	BY

CITY OF MOSCOW
LILLY ST. RECONSTRUCTION
'A' ST. TO THIRD ST.

WATERLINE
PLAN AND PROFILE

PROJ NO:	46016.01
DESIGNED BY:	AJD
DRAWN BY:	TJF
CHECKED BY:	AJD
DWG NAME:	46016.01WT01.DWG
DATE:	01-06-2022
SHEET NO:	W5

1. **ALTERNATE LOCAL STREET (28' STREET)**
   CITY OF MOSCOW STND DWG #B1
2. **CURBS & GUTTERS**
   CITY OF MOSCOW STND DWG #6
3. **SIDEWALKS & PATHWAYS**
   CITY OF MOSCOW STND DWG #7
4. **PEDESTRIAN RAMPS**
   CITY OF MOSCOW STND DWG #8
5. **DRIVEWAY APPROACHES**
   CITY OF MOSCOW STND DWG #9
6. **DRIVEWAY GRADE LIMITATIONS**
   CITY OF MOSCOW STND DWG #12
7. **UTILITY & MAIL BOX LOCATIONS**
   CITY OF MOSCOW STND DWG #13
8. **INTERSECTION SIGHT TRIANGLE**
   CITY OF MOSCOW STND DWG #17
9. **STORM SEWER MANHOLE**
   CITY OF MOSCOW STND DWG #21
10. **SANITARY SEWER MANHOLE**
    CITY OF MOSCOW STND DWG #22
11. **STORM & SANITARY MANHOLE RING & COVER**
    CITY OF MOSCOW STND DWG #24
12. **MANHOLE BASE DETAILS**
    CITY OF MOSCOW STND DWG #25
13. **CATCH BASIN & CATCH INLET**
    CITY OF MOSCOW STND DWG #26
14. **CURB & GUTTER PLAN**
    CITY OF MOSCOW STND DWG #27a
15. **CATCH BASIN & INLET TYPE 'A' GRATE**
    CITY OF MOSCOW STND DWG #27c
16. **SANITARY & STORM SEWER SERVICE CONNECTIONS**
    CITY OF MOSCOW STND DWG #28
17. **BACKFILL CLASS C & D**
    CITY OF MOSCOW STND DWG #33b
18. **SILT FENCE**
    CITY OF MOSCOW STND DWG #35
19. **CONSTRUCTION ENTRANCE & INLET PROTECTION**
    CITY OF MOSCOW STND DWG #36

COPYRIGHT 2022
Welch~Comer & Associates, Inc.
This document, and ideas and designs incorporated herein, as an instrument of professional service, is the property of Welch~Comer & Associates, Inc., and is not to be used in whole or in part for any other project without the written authorization of Welch~Comer & Associates, Inc.

PROFESSIONAL ENGINEER
LICENSED
15695
STATE OF IDAHO
ADAM J DORSEY

11/30/22

WELCH-COMER
ENGINEERS | SURVEYORS
www.welchcomer.com
330 E. Lakeside Ave, Suite 101
Coeur d'Alene, ID 83814
208–664–9382
(toll free) 877–815–5672
(fax) 208–664–5946

NO.	DATE	REVISION DESCRIPTION	BY

CITY OF MOSCOW
LILLY ST. RECONSTRUCTION
'A' ST. TO THIRD ST.

DETAILS

PROJ NO:	46016.01
DESIGNED BY:	AJD
DRAWN BY:	TJF
CHECKED BY:	AJD
DWG NAME:	46016.01DT01.DWG
DATE:	01–06–2022
SHEET NO:	DT1

PRESSURE TEST THROUGH FIRE HYDRANT

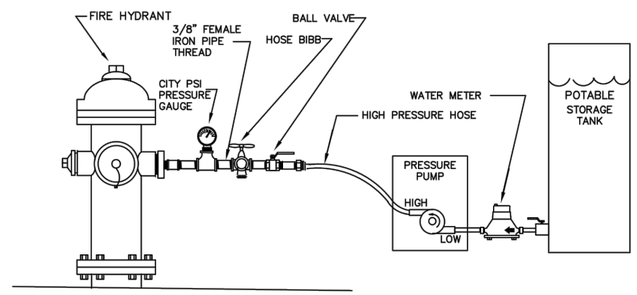

PRESSURE TEST THROUGH COPPERSETTER

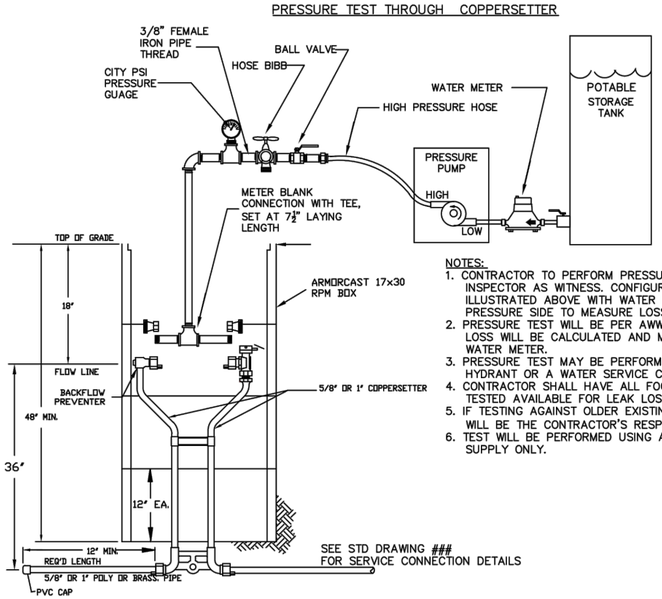

NOTES:
1. CONTRACTOR TO PERFORM PRESSURE TEST WITH CITY INSPECTOR AS WITNESS. CONFIGURATION MUST BE AS ILLUSTRATED ABOVE WITH WATER METER ON LOW PRESSURE SIDE TO MEASURE LOSS.
2. PRESSURE TEST WILL BE PER AWWA 600 REQUIREMENTS LOSS WILL BE CALCULATED AND MEASURED WITH A WATER METER.
3. PRESSURE TEST MAY BE PERFORMED THROUGH A FIRE HYDRANT OR A WATER SERVICE COPPERSETTER.
4. CONTRACTOR SHALL HAVE ALL FOOTAGE OF PIPE TO BE TESTED AVAILABLE FOR LEAK LOSS CALCULATIONS.
5. IF TESTING AGAINST OLDER EXISTING VALVES, FAILURE WILL BE THE CONTRACTOR'S RESPONSIBILITY.
6. TEST WILL BE PERFORMED USING A POTABLE WATER SUPPLY ONLY.

REVISION	APPROVED	DATE	CITY OF MOSCOW STANDARD DRAWING	APPROVED BY:
			APPROVED PRESSURE TESTING METHOD	CITY ENGINEER, PE 10804 — DATE:
				DWG NO. MSD-400.18

SIDE VIEW

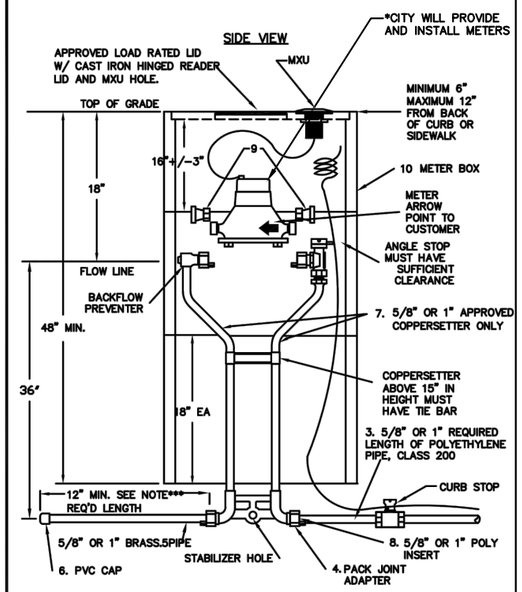

APPROVED TAPPING METHOD AND PARTS

APPROVED TAPPING METHOD

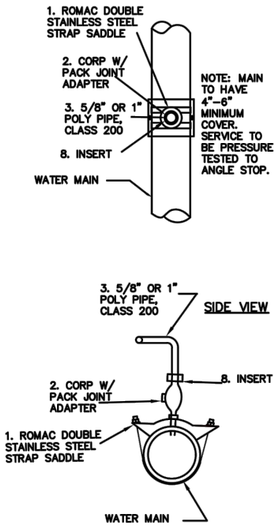

ITEM NO.	NO. REQ'D.	DESCRIPTION
1	1	1" ROMAC DOUBLE STRAP SERVICE SADDLE
2	1	IPS x 1" POLY PACK JOINT BRONZE CORPORATION STOP.
3	1	1" x REQ. LENGTH – USE PIPE SIZE, 200 PSI POLYETHLENE SERVICE LINE
4	1	1" IPS x 1" POLY BRASS PACK JOINT ADAPTER
5	1	1" X MIN 12" LONG BRASS OR POLY PIPE AS APPROVED BY CITY ENGINEER – BRASS PIPE BACK SIDE
6	1	1" PVC CAP.
7	1	1" APPROVED NSF 61 COMPLIANT COPPERSETTER, ALL COMPONENTS
8	2	1" POLY INSERTS WHERE NEEDED
9	2	#24 ADAPTERS
10	3	ARMORCAST 17X30 RPM OR HUBBEL/QUASITE 1130 BOX W/ RADIO READ LID AND HINGED CAST IRON READER LID. BOX WILL CONSIST OF 18" BOTTOM AND MIDDLE SECTIONS, 12" TOP SECTION.

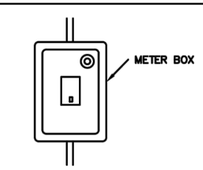

PLAN VIEW

NOTE: ALL MATERIALS USED IN CONTACT WITH POTABLE WATER ARE TO BE NSF-61 COMPLIANT.

NOTE: STABILIZER BAR MUST BE USED FOR SETTINGS HAVING POLYPIPE ON BOTH FRONT AND BACK SIDES.

** NOTE: NO PRIVATE CONNECTIONS OR FITTINGS ALLOWED INSIDE THE METER BOX.**

*** NOTE: POLY OR BRASS PIPE MUST EXTEND TO THE BACK OF WALK IF METER IS *** WITHIN GREEN STRIP. OTHERWISE PIPE MUST EXTEND TO CITY OWNED SIDE OF SIDEWALK AS A MINIMUM UNLESS SPECIFIED BY ENGINEER.

REVISION	APPROVED	DATE	CITY OF MOSCOW STANDARD DRAWING	APPROVED BY:
			5/8" & 1" COPPERSETTER STANDARD PIT SETTINGS	CITY ENGINEER, PE 7432 — DATE:
				DWG NO. MSD-400.1

COPYRIGHT 2022
Welch~Comer & Associates, Inc.
This document, and ideas and designs incorporated herein, as an instrument of professional service, is the property of Welch~Comer & Associates, Inc., and is not to be used in whole or in part for any other project without the written authorization of Welch~Comer & Associates, Inc.

PROFESSIONAL ENGINEER LICENSED 15695 STATE OF IDAHO ADAM J DORSEY

11/30/22

WELCH-COMER ENGINEERS | SURVEYORS
www.welchcomer.com 208-664-9382
330 E. Lakeside Ave, Suite 101 (toll free) 877-815-5672
Coeur d'Alene, ID 83814 (fax) 208-664-5946

NO.	DATE	REVISION DESCRIPTION	BY

CITY OF MOSCOW
LILLY ST. RECONSTRUCTION
'A' ST. TO THIRD ST.

DETAILS

PROJ NO:	46016.01
DESIGNED BY:	AJD
DRAWN BY:	TJF
CHECKED BY:	AJD
DWG NAME:	46016.01DT01.DWG
DATE:	01-10-2022
SHEET NO:	DT2

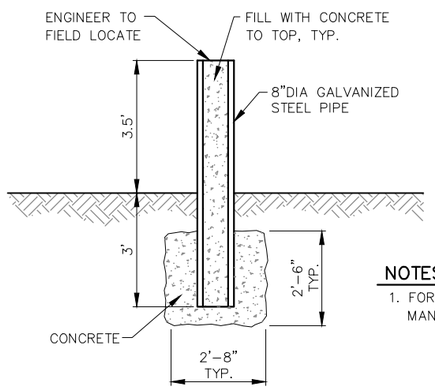

NOTES:

1. FOR DECORATIVE LIGHTED BOLLARDS, SEE MANUFACTURES SPECIFICATIONS FOR MOUNTING.

CONCRETE BOLLARD DETAIL (1 / DT3)

NO SCALE

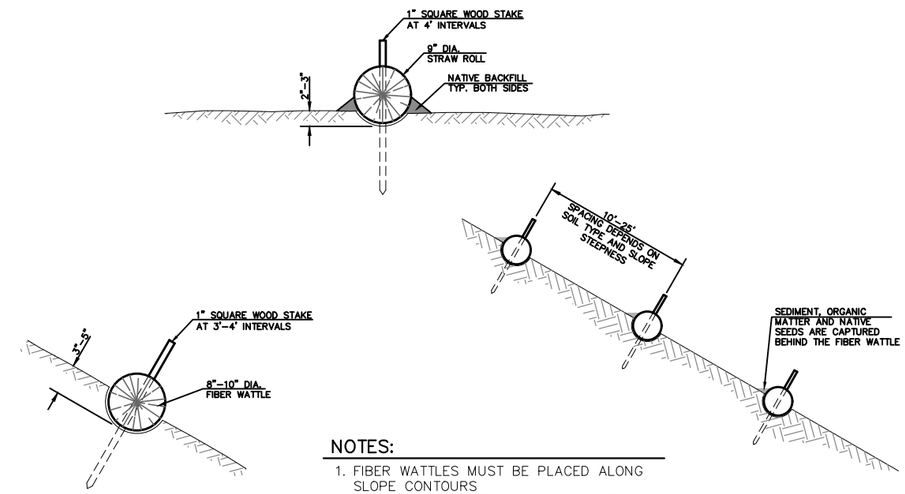

NOTES:

1. FIBER WATTLES MUST BE PLACED ALONG SLOPE CONTOURS
2. FIBER WATTLE INSTALLATION REQUIRES THE PLACEMENT AND SECURE STAKING OF THE ROLLS IN A TRENCH, DUG ON CONTOUR. RUNOFF MUST NOT BE ALLOWED TO RUN UNDER OR AROUND FIBER WATTLE.

FIBER WATTLE INSTALLATION DETAIL (2 / DT3)

NO SCALE

NOTES:

1. ORNAMENTAL STEEL FENCE TO BE USED WHEN EXPOSED WALL HEIGHT EXCEEDS 30".
2. POST SHALL BE CONSTRUCTED TO DRAIN AND PREVENT MOISTURE BUILD-UP WITHIN THE POST.
3. CITY WILL CONSIDER APPROVED EQUAL FOR THE ORNAMENTAL FENCE.
4. IF CONCRETE STRUCTURE DOES NOT ALLOW FOR 12" OF EMBEDMENT, CONTRACTOR WILL PROVIDE A SURFACE MOUNT OPTION WITH A GALVANIZED STEEL FLANGE BASE PLATE PAINTED TO MATCH ORNAMENTAL FENCE AND CONCRETE ANCHOR BOLTS

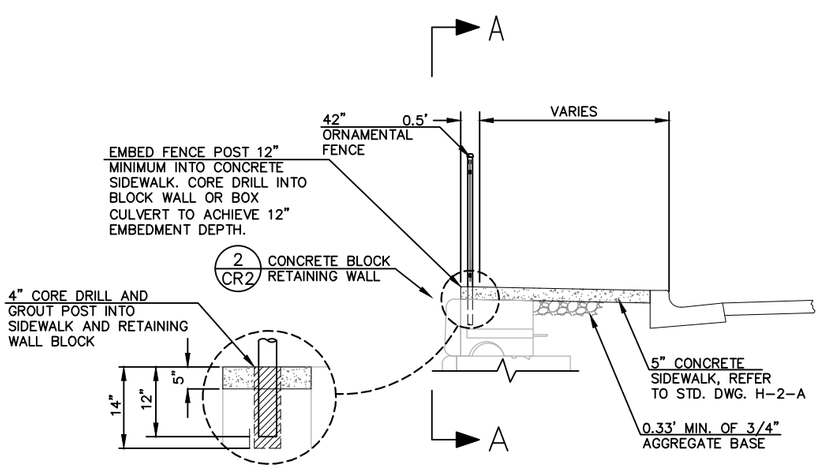

INSTALLATION OVER SIDEWALK

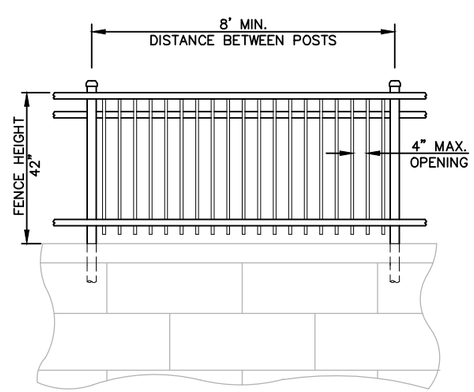

SECTION A-A

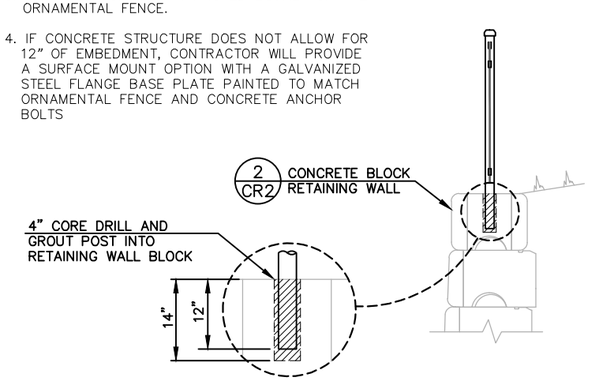

INSTALLATION DIRECTLY ON BLOCK RETAINING WALL OR CONCRETE STRUCTURE

STEEL ORNAMENTAL FENCE DETAIL AT SIDEWALK WITH BLOCK RETAINING WALL (3 / DT3)

NO SCALE

COPYRIGHT 2022
Welch~Comer & Associates, Inc.
This document, and ideas and designs incorporated herein, as an instrument of professional service, is the property of Welch~Comer & Associates, Inc., and is not to be used in whole or in part for any other project without the written authorization of Welch~Comer & Associates, Inc.

PROFESSIONAL ENGINEER LICENSED 15695 STATE OF IDAHO ADAM J DORSEY

11/30/22

WELCH-COMER ENGINEERS | SURVEYORS
www.welchcomer.com 208-664-9382
330 E. Lakeside Ave, Suite 101 (toll free) 877-815-5672
Coeur d'Alene, ID 83814 (fax) 208-664-5946

NO.	DATE	REVISION DESCRIPTION	BY

CITY OF MOSCOW

LILLY ST. RECONSTRUCTION 'A' ST. TO THIRD ST.

DETAILS

PROJ NO:	46016.01
DESIGNED BY:	AJD
DRAWN BY:	TJF
CHECKED BY:	AJD
DWG NAME:	46016.01DT01.DWG
DATE:	11-30-2022
SHEET NO:	DT3

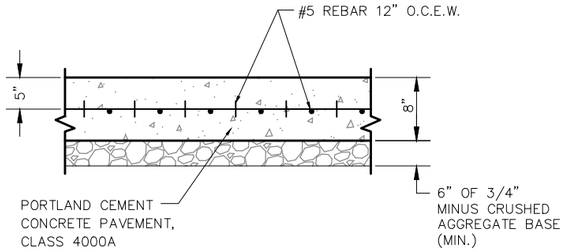

NOTES:

1. EXPANSION JOINT FILLER MATERIAL SHALL BE PLACED BETWEEN THE CONCRETE INTERSECTION AND ADJACENT CONCRETE CURBS.

CONCRETE PAVEMENT OVER BOX CULVERT DETAIL

1 / DT4

NO SCALE

NOTES:

1. PRECAST CONCRETE HEADWALL, ELBOW, AND BOX CULVERT INCLUDE ALL LABOR, MATERIALS, AND EQUIPMENT NECESSARY, INCLUDING DESIGN, FABRICATION, CONCRETE, IMBEDDED ITEMS, OPENINGS, DELIVERY, INSTALLATION, BACKFILL, COMPACTION, BEARING PADS, SEALANT, CONNECTION DEVICES AND GROUTING. SEE ISPWC SECTION 704 – PRECAST CONCRETE. BACKFILL AND COMPACT PRECAST STRUCTURES USING CLASS D BACKFILL REQUIREMENTS. SEE CITY OF MOSCOW SPECIFICATIONS AND DTL 33B/DT6.

PRECAST CONCRETE HEADWALL

3 / DT4

NO SCALE

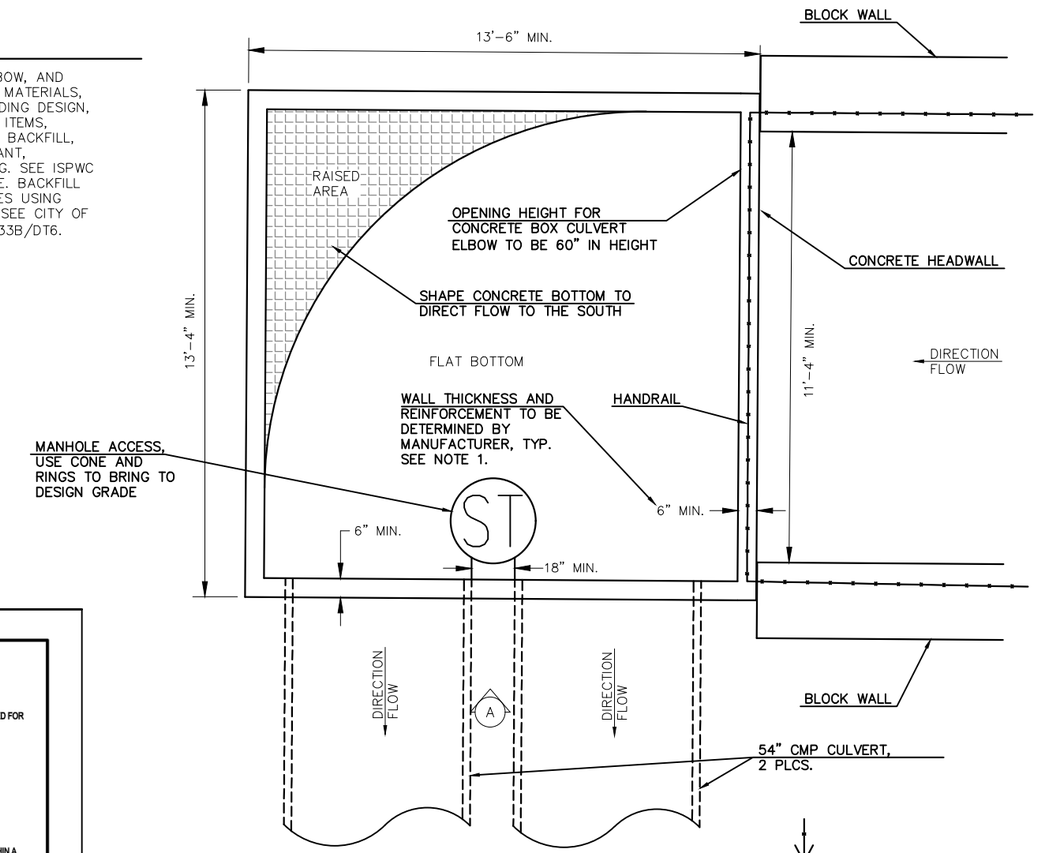

PLAN VIEW
NO SCALE

WING WALL DIMENSIONS & WEIGHTS

PIPE	A	B	C	D	E	F	G	H	I	J	WT. (LBS)
30"/36"	39"/48"	22"/20"	136"	198"	69"	39"	12"	35"	6"	45°	14300 / 13600
42"/48"	56"/63"	20.5"	162.5"	233"	80"	44"	12"	40"	6"	45°	11900 / 11200
54"/60"	~~72"/84"~~	~~18.5"/16.5"~~	~~202.5"~~	~~263"~~	~~96"~~	53"	15"	40"	6"	50°	~~14600 / 14500~~
	* 60"	* 18"	* 162"	* 192"	* 80"						

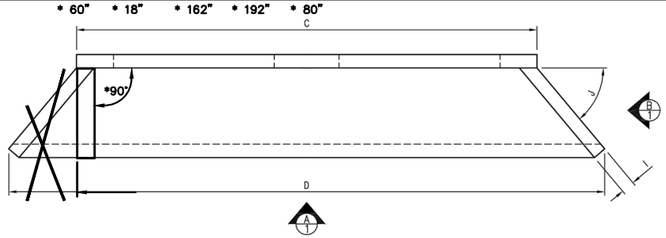

PLAN VIEW
SCALE: 1/4" = 1'-0"

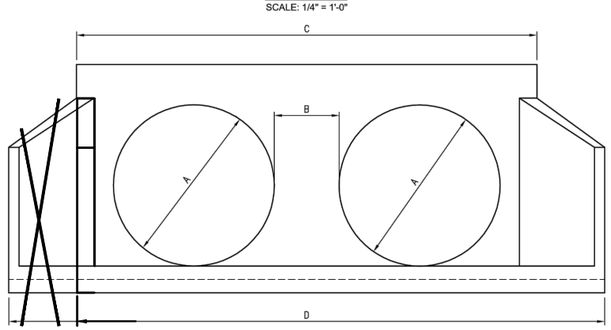

VIEW A
SCALE: 1/4" = 1'-0"

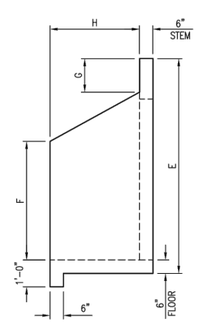

VIEW B
SCALE: 1/4" = 1'-0"

NOTES TO CONTRACTOR:

1. CONTRACTOR SHALL BE RESPONSIBLE TO VERIFY THAT PRECAST MEETS SPECIFIC PROJECT REQUIREMENTS. PRECAST DESIGNED FOR TYPICAL PARAMETERS AS NOTED HEREIN. FOR VARIATIONS TO PARAMETERS OR ANY OTHER QUESTIONS CONTACT OLDCASTLE PRECAST, INC. PROFESSIONAL ENGINEER.
2. STABILITY OF PRECAST WINGWALL IS DEPENDENT ON GROUTED CONNECTION OF REINFORCED CONCRETE PIPE (RCP) TO PRECAST WING WALL. AS SUCH, PRIOR TO GROUTING THE ANNULAR SPACE BETWEEN RCP AND PRECAST WING WALL THE OUTSIDE OF THE RCP AND INSIDE OF WALL OPENING SHALL BE CLEANED OF ANY DUST OR LAITANCE. RCP SHALL BE INSTALLED IN WALL OPENINGS FOR THE FULL THICKNESS OF PRECAST STEM WALL, ALL ANNULAR SPACES SHALL THEN BE FILLED WITH A MIN OF 3,000 PSI NON-SHRINK NON-CORROSIVE GROUT, TIGHT TO THE UNDERSIDE OF WALL FOR FULL THICKNESS OF PRECAST. GROUT SHALL BE MIXED IN ACCORDANCE WITH MANUFACTURER'S INSTRUCTIONS (I.E. MAXIMUM WATER CONTENT SHALL NOT BE EXCEEDED).

GENERAL DESIGN NOTES:

1. STRENGTH DESIGN METHOD I.A.W. ACI 318.
2. DESIGN I.A.W NCDOT STD DRAWING # 838.80 AS MODIFIED FOR DOUBLE BARREL APPLICATION.
3. SOIL PROPERTIES:
   - BACKFILL INTERNAL FRICTION ANGLE = 27°,
   - UNIT WEIGHT OF SOIL = 120 PCF,
   - PRECAST TO SOIL FRICTION FACTOR = 0.40,
   - BACKFILL SLOPE = 3H:1V (MAX).
3. WING WALL DESIGN PARAMETERS:
   - CONCRETE UNIT WT = 145 PCF,
   - PRECAST TO SOIL FRICTION FACTOR = 0.40,
   - VEHICULAR SURCHARGE = 0 PSF (TRAFFIC NOT WITHIN A DISTANCE OF H/2 FROM BACK OF WALL),
   - ALLOWABLE BOND STRENGTH OF NON-SHRINK GROUT TO PRECAST = 20 PSI.
4. WING WALL STABILITY:
   - F.S. SLIDING = 1.5 (MIN),
   - F.S. OVERTURNING = 2.0 (MIN),
   - SCOUR ANALYSIS (IF REQUIRED). BY OTHERS.
5. CONCRETE COMPRESSIVE STRENGTH AT 28 DAYS = 5,000 PSI.
6. REINFORCEMENT: ASTM A615, GRADE 60.
7. ALL EXPOSED EDGES SHALL BE CHAMFERED ¾"(MIN) TO 1" (MAX).

NPCA CERTIFIED PLANT

THIS MUST BE FILLED OUT BEFORE MANUFACTURING BEGINS

APPROVED W/ NO EXCEPTIONS TAKEN: ☐
APPROVED AS NOTED: ☐
REVISED AND RESUBMIT: ☐

SIGNATURE DATE

Oldcastle Precast®
4905 STOUGH RD. CONCORD, NC
OFFICE 704-788-4050, FAX 704-788-4060
NC ENGINEERING LICENSE #F-1002

THIS DOCUMENT IS THE PROPERTY OF OLDCASTLE PRECAST, INC. IT IS CONFIDENTIAL, SUBMITTED FOR REFERENCE PURPOSES ONLY, AND SHALL NOT BE USED IN ANY WAY INJURIOUS TO THE INTERESTS OF, OR WITHOUT THE WRITTEN PERMISSION OF OLDCASTLE PRECAST, INC. COPYRIGHT © 2017 OLDCASTLE PRECAST, INC ALL RIGHTS RESERVED

DOUBLE WING WALL
SUBMITTAL LAYOUT

CUSTOMER

DATE	SALES	DRAWN	ENGINEER	CHECKED	SALES ORDER
6/8/17		PPS			
DRAWING NUMBER				REVISION	SHEET
Double Wing Wall				REV DATE	1 OF 1

CONCRETE BOX CULVERT ELBOW DETAIL

2 / DT4

NO SCALE

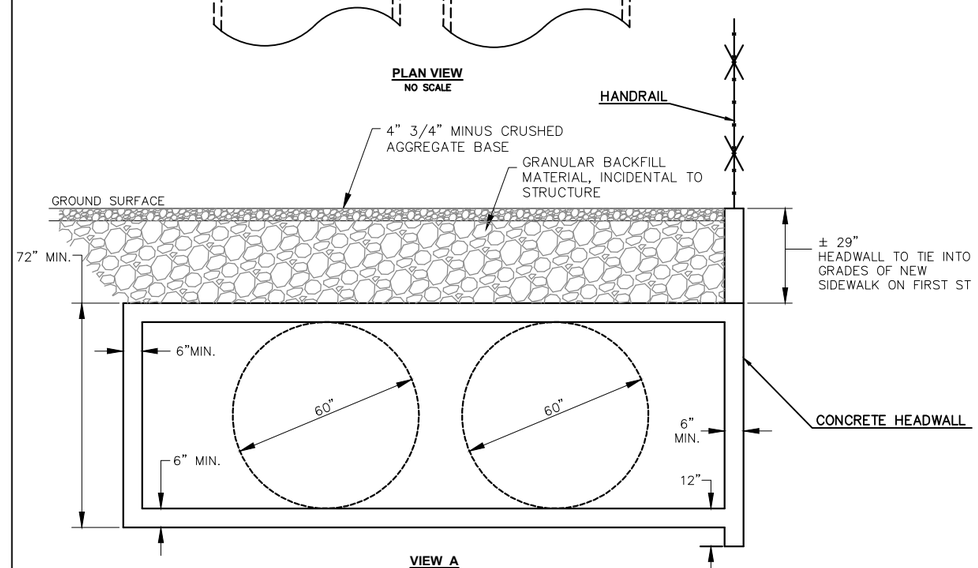

VIEW A
NO SCALE

COPYRIGHT 2022
Welch~Comer & Associates, Inc.
This document, and ideas and designs incorporated herein, as an instrument of professional service, is the property of Welch~Comer & Associates, Inc., and is not to be used in whole or in part for any other project without the written authorization of Welch~Comer & Associates, Inc.

PROFESSIONAL ENGINEER LICENSED 15695 STATE OF IDAHO ADAM J DORSEY

11/30/22

WELCH-COMER ENGINEERS | SURVEYORS
www.welchcomer.com
330 E. Lakeside Ave, Suite 101
Coeur d'Alene, ID 83814
208-664-9382
(toll free) 877-815-5672
(fax) 208-664-5946

NO.	DATE	REVISION DESCRIPTION	BY

CITY OF MOSCOW
LILLY ST. RECONSTRUCTION
'A' ST. TO THIRD ST.

DETAILS

PROJ NO:	46016.01
DESIGNED BY:	AJD
DRAWN BY:	TJF
CHECKED BY:	AJD
DWG NAME:	46016.01DT01.DWG
DATE:	11-21-2022
SHEET NO:	DT4

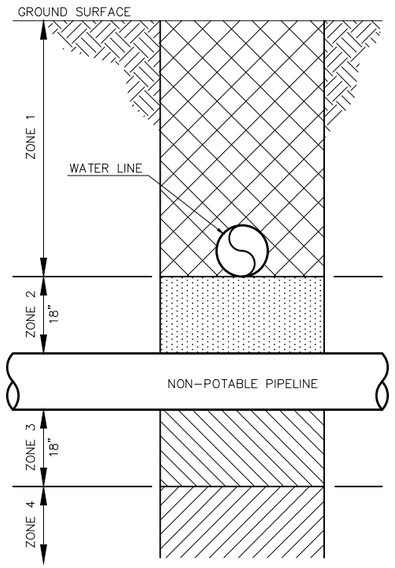

NOTES

AT ALL CROSSINGS, THE WATER LINE SHALL BE CENTERED AT THE CROSSING SO THAT JOINTS ARE EQUAL DISTANCE AND AS FAR AS POSSIBLE FROM THE NON-POTABLE PIPELINE.

PRESSURIZED SEWER MAINS ARE NOT ALLOWED IN ZONE 2 OR 3.

ZONE 1:
WATER WITH MORE THAN 18" OF CLEARANCE ABOVE NON-POTABLE PIPELINE REQUIRES NO ADDITIONAL PRECAUTIONS.

ZONE 2:
WATER IS LESS THAN 18" ABOVE TOP OF NON-POTABLE PIPELINE: EITHER A NON-POTABLE GRAVITY PIPELINE CAN BE CONSTRUCTED TO WATER LINE STANDARDS AND PRESSURE TESTED FOR WATER TIGHTNESS FOR A MIN. HORIZONTAL DISTANCE OF 10' ON BOTH SIDES OF THE CROSSING.
OR
EITHER THE NON-POTABLE PIPELINE OR THE WATER LINE OR BOTH CAN BE ENCASED WITH A SLEEVING MATERIAL ACCEPTABLE TO DEQ FOR A DISTANCE OF 10 HORIZONTAL FEET ON BOTH SIDES OF THE CROSSING.

ZONE 3:
SAME REQUIREMENTS AS ZONE 2 EXCEPT THE NON-POTABLE PIPELINE MUST ALSO BE SUPPORTED ABOVE THE CROSSING TO PREVENT SETTLING, AND EITHER THE POTABLE OR NON-POTABLE PIPE MUST BE CASED.

ZONE 4:
SAME REQUIREMENT AS ZONE 1 EXCEPT THE NON-POTABLE PIPELINE MUST ALSO BE SUPPORTED ABOVE THE CROSSING TO PREVENT SETTLING.

TYPICAL WATER AND NON-POTABLE PIPELINE CROSSING VERTICAL SEPARATION REQUIREMENTS DETAIL

1 / DT5

NO SCALE

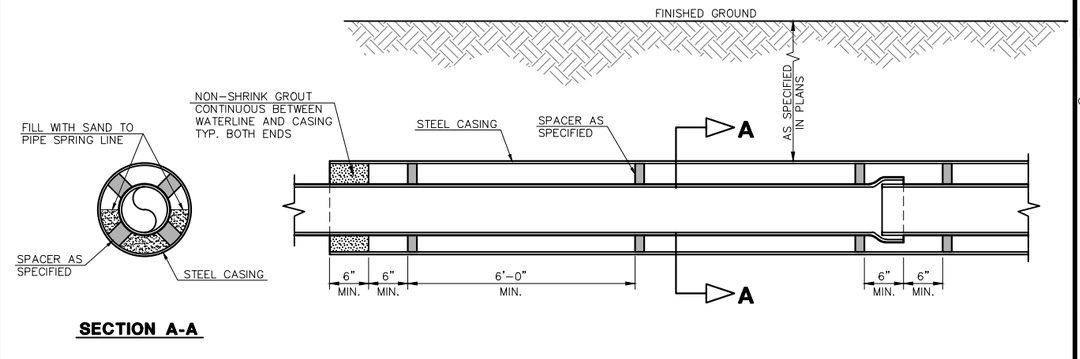

SEWER CASING DETAIL

2 / DT5

NO SCALE

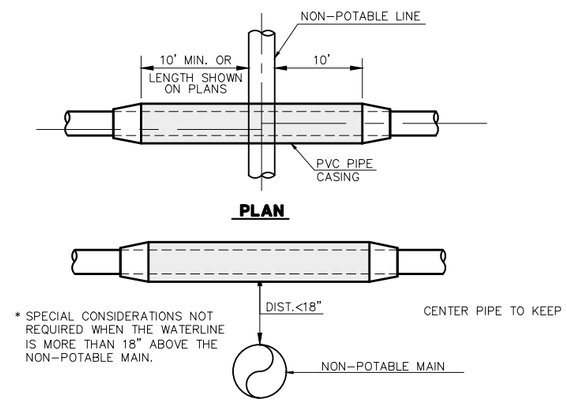

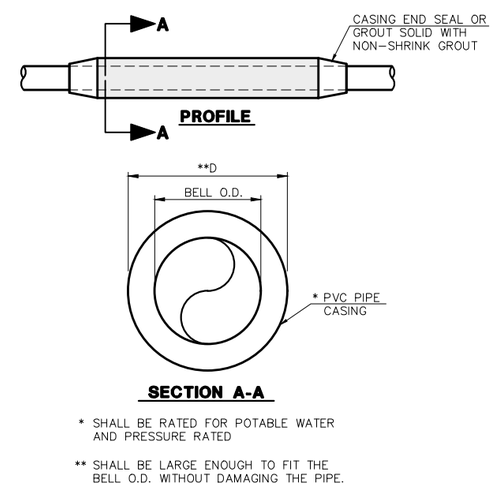

* SHALL BE RATED FOR POTABLE WATER AND PRESSURE RATED

** SHALL BE LARGE ENOUGH TO FIT THE BELL O.D. WITHOUT DAMAGING THE PIPE.

WATERLINE ENCASEMENT DETAIL FOR NON-POTABLE LINE CROSSINGS

4 / DT5

NO SCALE

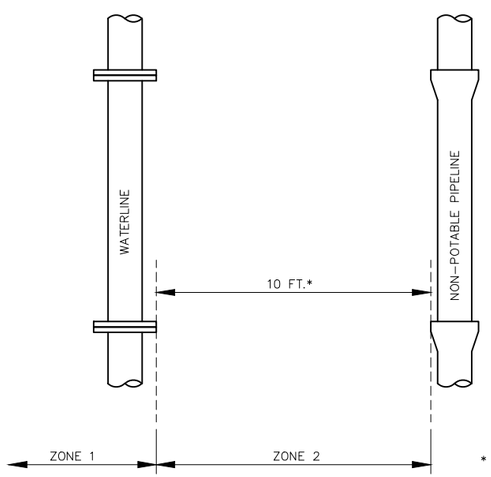

NOTES

SANITARY SEWER FORCE MAINS MUST HAVE MIN. 10' HORIZONTAL SEPARATION AND 18" VERTICAL SEPARATION.

ZONE 2 AND ZONE 3 PLACEMENTS ARE NOT ALLOWED.

ZONE 1:
NO SPECIAL REQUIREMENTS.

ZONE 2:
A) NO SPECIAL REQUIREMENTS FOR POTABLE OR NON-POTABLE SERVICE.

C) WATER AT LEAST 18 INCHES HIGHER IN ELEVATION THAN THE NON-POTABLE WATERLINE.

AND

D) POTABLE WATERLINE ENCASED WITH POTABLE CLASS PIPE.

* DISTANCES ARE HORIZONTAL

TYPICAL WATER AND NON-POTABLE PIPELINE CROSSING HORIZONTAL SEPARATION REQUIREMENTS DETAIL

3 / DT5

NO SCALE

COPYRIGHT 2022
Welch-Comer & Associates, Inc.
This document, and ideas and designs incorporated herein, as an instrument of professional service, is the property of Welch-Comer & Associates, Inc., and is not to be used in whole or in part for any other project without the written authorization of Welch-Comer & Associates, Inc.

PROFESSIONAL ENGINEER LICENSED 15695 STATE OF IDAHO ADAM J DORSEY

11/30/22

WELCH-COMER
ENGINEERS | SURVEYORS
www.welchcomer.com 208-664-9382
330 E. Lakeside Ave, Suite 101 (toll free) 877-815-5672
Coeur d'Alene, ID 83814 (fax) 208-664-5946

NO.	DATE	REVISION DESCRIPTION	BY

CITY OF MOSCOW
LILLY ST. RECONSTRUCTION
'A' ST. TO THIRD ST.

DETAILS

PROJ NO:	46016.01
DESIGNED BY:	AJD
DRAWN BY:	TJF
CHECKED BY:	AJD
DWG NAME:	46016.01DT01.DWG
DATE:	01-06-2022
SHEET NO:	DT5

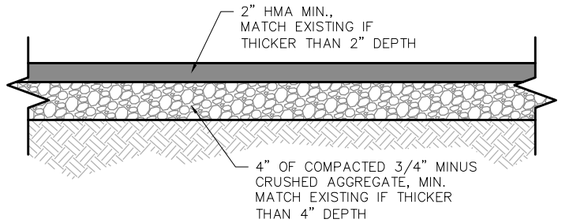

ASPHALT PATCH SECTION DETAIL

NO SCALE

1 / DT6

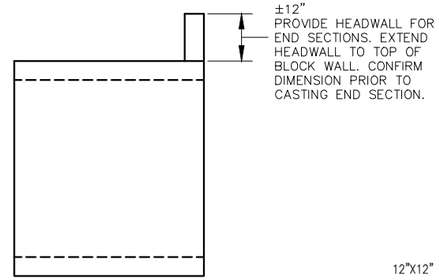

END SECTION SIDE VIEW
NO SCALE

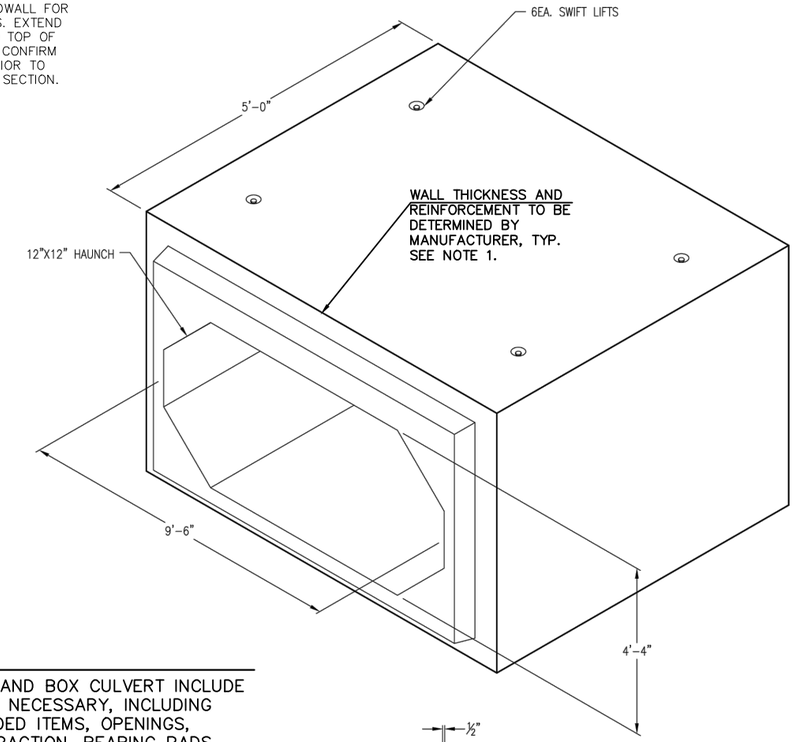

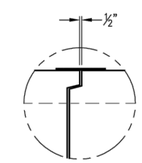

TYPICAL CONNECTION DETAIL

NOTES:

1. PRECAST CONCRETE HEADWALL, ELBOW, AND BOX CULVERT INCLUDE ALL LABOR, MATERIALS, AND EQUIPMENT NECESSARY, INCLUDING DESIGN, FABRICATION, CONCRETE, IMBEDDED ITEMS, OPENINGS, DELIVERY, INSTALLATION, BACKFILL, COMPACTION, BEARING PADS, SEALANT, CONNECTION DEVICES AND GROUTING. SEE ISPWC SECTION 704 – PRECAST CONCRETE. BACKFILL AND COMPACT PRECAST STRUCTURES USING CLASS D BACKFILL REQUIREMENTS. SEE CITY OF MOSCOW SPECIFICATIONS AND DTL 33B/DT6.
2. BOX CULVERT END SECTIONS TO BE CAST WITHOUT NOTCHED END.

BOX CULVERT DETAIL

NO SCALE

2 / DT6

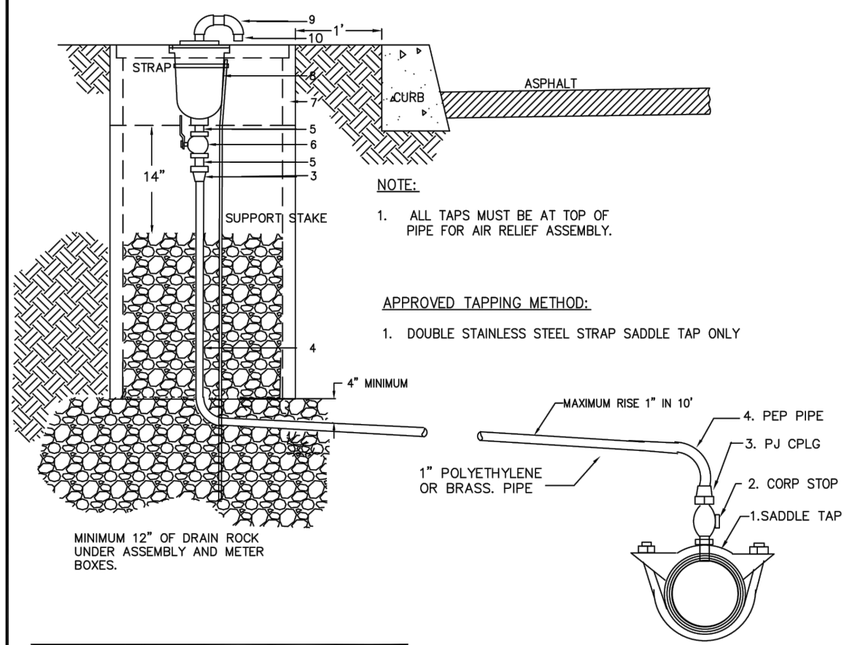

NOTE:

1. ALL TAPS MUST BE AT TOP OF PIPE FOR AIR RELIEF ASSEMBLY.

APPROVED TAPPING METHOD:

1. DOUBLE STAINLESS STEEL STRAP SADDLE TAP ONLY

ITEM NO.	NO. REQ.	DESCRIPTION
1	1	ROMAC DOUBLE STRAP TAPPING SADDLE
2	1	1" BRONZE CORPORATION STOP
3	2	1" PACK JOINT AS REQUIRED
4	1	1" IPS POLYETHELENE OR BRASS. PIPE
5	4	1" x 2" BRASS NIPPLES
6	1	1" APPROVED BALL VALVE
7	4	ARMORCAST 12X20 RPM – MIN 3 REQ. PLUS 1 WITH LID
8	1	APCO (REGULAR) COMBINATION AIR RELEASE VALVE (150 PSI)
9	2	1" 90 DEGREE BRASS ELBOWS
10	1	INSECT SCREEN

ISPWC STANDARD # 408
AIR RELIEF VALVES

UNLESS OTHERWISE SPECIFIED, THESE APPURTENANCES SHALL BE OF THE MATERIAL SPECIFIED OR SHOWN ON THE PLANS AND SHALL MEET PRESSURE REQUIREMENTS EQUAL TO OR EXCEEDING THE MAIN INSTALLATION AND SHALL BE NSF-61 CERTIFIED.

REVISION	APPROVED	DATE

CITY OF MOSCOW STANDARD DRAWING

5/8" OR 1" AIR RELIEF ASSEMBLY

APPROVED BY:

CITY ENGINEER, PE 10804 DATE:

DWG NO. MSD-400.5

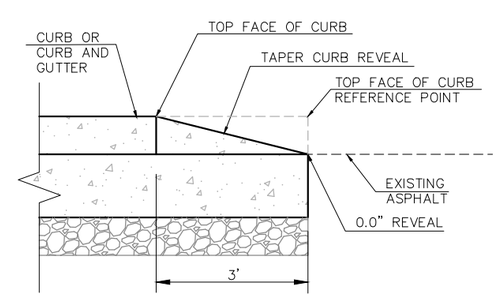

CURB SECTION

CEMENT CONCRETE CURB TERMINUS DETAIL

NO SCALE

3 / DT6

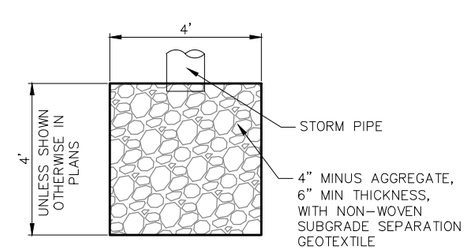

ROCK ARMORED DISCHARGE APRON DETAIL

NO SCALE

4 / DT6

COPYRIGHT 2022
Welch~Comer & Associates, Inc.
This document, and ideas and designs incorporated herein, as an instrument of professional service, is the property of Welch~Comer & Associates, Inc., and is not to be used in whole or in part for any other project without the written authorization of Welch~Comer & Associates, Inc.

PROFESSIONAL ENGINEER LICENSED 15695 STATE OF IDAHO ADAM J DORSEY

11/30/22

WELCH-COMER ENGINEERS | SURVEYORS
www.welchcomer.com
330 E. Lakeside Ave, Suite 101
Coeur d'Alene, ID 83814
208-664-9382
(toll free) 877-815-5672
(fax) 208-664-5946

NO.	DATE	REVISION DESCRIPTION	BY

CITY OF MOSCOW

LILLY ST. RECONSTRUCTION
'A' ST. TO THIRD ST.

DETAILS

PROJ NO:	46016.01
DESIGNED BY:	AJD
DRAWN BY:	TJF
CHECKED BY:	AJD
DWG NAME:	46016.01DT01.DWG
DATE:	01-06-2022
SHEET NO:	DT6

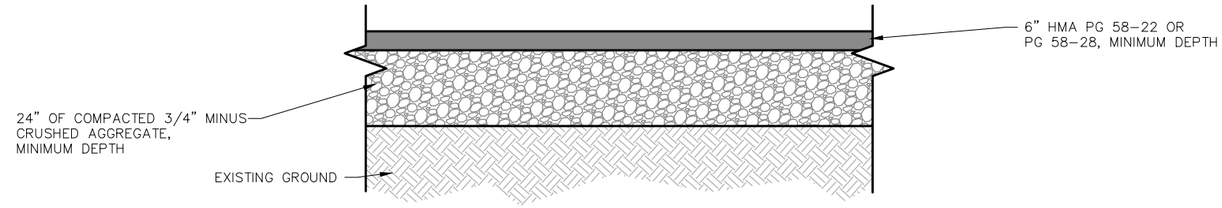

SH8 ASPHALT REPAIR DETAIL

NO SCALE

1 / DT7

TYLER 6855 HD SERIES CAST IRON VALVE BOX

NOTE:
1. REFER TO STD DRAWING ## FOR TRACER WIRE INSTALLATION

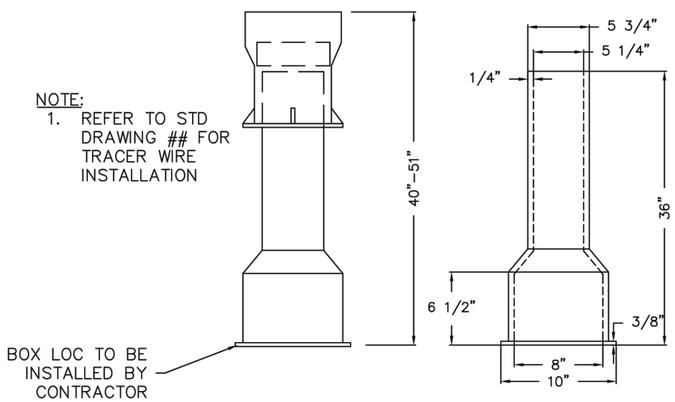

BOX COMPLETE

BOTTOM

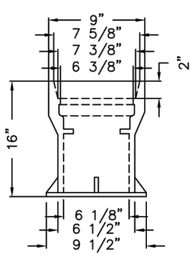

TOP

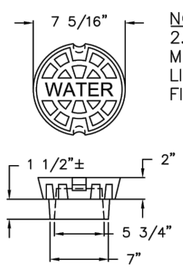

5 1/4" DROP LID

NOTE:
2. ALL FIRE LINES MUST USE SEPARATE LID FOR DEDICATED FIRE LINES

BOX COMPLETE EXTENSION. IN INCHES	WEIGHT	TOP SECTION W/LID LENGTH	WEIGHT	BOTTOM LENGTH	WT.
40"–51"	90 LB.	16"	45 LB.	36"	45 LB.

Tyler Cast Iron Valve Box Series 6855 HD with heavy lid or approved equal
Accommodates 4" Through 12" Valves, 5 1/4" Shafts, Slip–Type

REVISION	APPROVED	DATE	CITY OF MOSCOW STANDARD DRAWING	APPROVED BY:
			CAST IRON VALVE BOX TWO PIECE	CITY ENGINEER, PE 10804 DATE:
				DWG NO. MSD-400.8

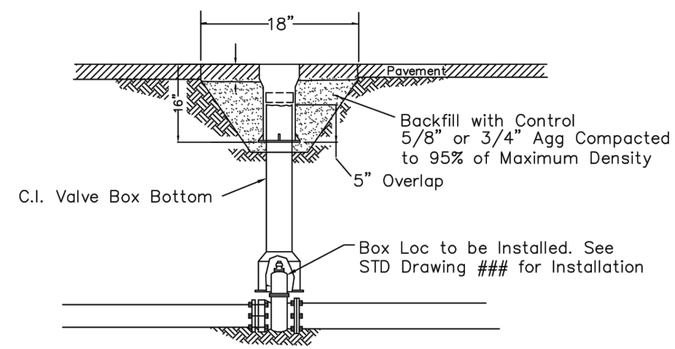

TYLER CAST IRON VALVE BOX 6855 HD, WITH NO FLIP "WATER" HEAVY LID, 16" x 6 1/8" ID TO SLIP OVER C.I. VALVE BOX BOTTOM SECTION.

FOR OVERLAY PROJECTS WHERE EXISTING TYLER VALVE BOXES ARE PRESENT, MAY USE 5" DOUBLE HUB SOIL PIPE AS BOTTOM BOX EXT..

Note: See Standard Drawing #### for Plan View Profile.

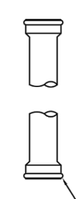

5" C.I. double hub soil pipe extension, cut to length as required. (Makes two extensions)

REVISION	APPROVED	DATE	CITY OF MOSCOW STANDARD DRAWING	APPROVED BY:
			VALVE BOX ADJUSTMENT	CITY ENGINEER, PE 10804 DATE:
				DWG NO. MSD-400.9

COPYRIGHT 2022
Welch~Comer & Associates, Inc.
This document, and ideas and designs incorporated herein, as an instrument of professional service, is the property of Welch~Comer & Associates, Inc., and is not to be used in whole or in part for any other project without the written authorization of Welch~Comer & Associates, Inc.

PROFESSIONAL ENGINEER LICENSED 15695 STATE OF IDAHO ADAM J DORSEY

11/30/22

WELCH-COMER ENGINEERS | SURVEYORS
www.welchcomer.com 208–664–9382
330 E. Lakeside Ave, Suite 101 (toll free) 877–815–5672
Coeur d'Alene, ID 83814 (fax) 208–664–5946

NO.	DATE	REVISION DESCRIPTION	BY

CITY OF MOSCOW

LILLY ST. RECONSTRUCTION
'A' ST. TO THIRD ST.

DETAILS

PROJ NO:	46016.01
DESIGNED BY:	AJD
DRAWN BY:	TJF
CHECKED BY:	AJD
DWG NAME:	46016.01DT01.DWG
DATE:	11–21–2022
SHEET NO:	DT7

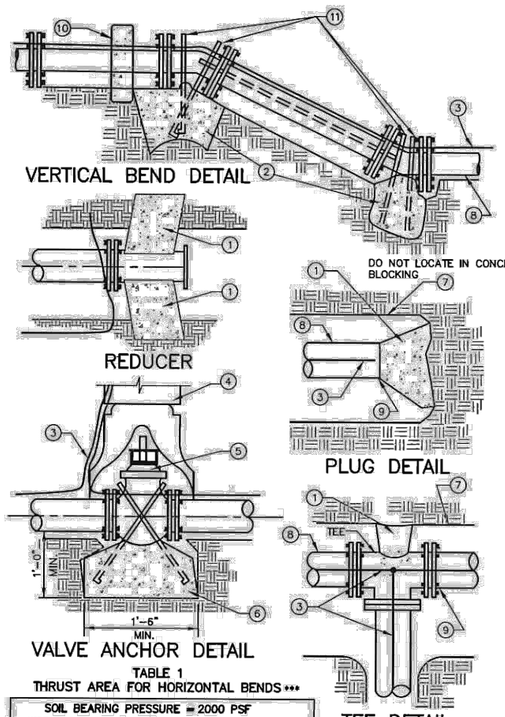

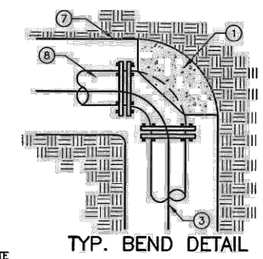

LEGEND

1. FOR HORIZONTAL PIPE BENDS, BEARING THRUST BLOCKS MUST PROVIDE 2500 P.S.I. CONCRETE POURED AGAINST UNDISTURBED EARTH PER TABLE 1.
2. FOR VERTICAL PIPE BENDS, GRAVITY THRUST THRUST BLOCKS MUST PROVIDE A VOLUME OF CONCRETE POURED AGAINST UNDISTURBED EARTH WHICH IS SIZED FOR EXPECTED FORCES WITH A MINIMUM 1.5 FACTOR OF SAFETY.
3. NO. 12 COPPER FINDER WIRE. SEE SD-514 FOR SPLICING.
4. C.I. VALVE BOX WITH COVER.
5. C.I. GATE VALVE (M.J.).
6. PRECAST BLOCK FOR CUT IN TEE AND VALVE OR CAST IN PLACE WITH 2 1/2" ø MIN. REBAR.
7. TRENCH SIDE.
8. PIPE.
9. PLUG.
10. HAMMERHEAD THRUST BLOCKING.
11. ANCHOR BARS (1/2"ø MIN.).

NOTES:

- (A) ANCHOR ALL VALVES CONNECTED TO P.V.C. PIPE AS SHOWN.
- (B) COVER BOLTS AND FLANGES WITH PLASTIC TO PROTECT FROM CONCRETE ADHERENCE DURING CONSTRUCTION OF THRUST BLOCKS.
- (C) SEE CHART FOR MIN THRUST BLOCKS BEARING AREAS.
- (D) ALL CONCRETE TO BE 2500 P.S.I. STRENGTH POURED AGAINST UNDISTURBED EARTH.
- (E) PROVIDE 6 MIL POLYPROPYLENE BETWEEN FITTINGS AND CONCRETE.
- (F) NOTIFY ENGINEER FOR ANY CONDITION OR PIPE SIZE NOT INDICATED.
- (D) ALL BLOCKS TO BE CENTERED AROUND PIPE SPRING LINE.

TABLE 1
THRUST AREA FOR HORIZONTAL BENDS***

SOIL BEARING PRESSURE = 2000 PSF
WORKING PRESSURE RATING = 150 PSI
SAFETY FACTOR = 1.5

PIPE SIZE	MINIMUM SQUARE FEET OF THRUST AREA ONTO UNDISTURBED EARTH*			
	TEE, PLUG OR VALVE	90° BEND**	45° BEND	22.5°, 11.25° BENDS OR REDUCER
3	0.8	1.1	0.6	0.3
4	1.4	2.0	1.1	0.6
6	3.2	4.5	2.4	1.2
8	5.7	8.0	4.3	2.2
10	8.8	12.5	6.8	3.4
12	12.7	18.0	9.7	5.0
14	17.3	24.5	13.3	6.8
16	22.6	32.0	17.3	8.8
18	28.6	40.5	21.9	11.2

* MUST BE INCREASED BASED ON DIFFERENT CONDITIONS (HIGHER WORKING PRESSURE OR LOWER SOIL BEARING STRENGTH).
** OR TEE ACTING AS A 90° BEND.
*** THRUST BLOCK DEPTH TO BE A MINIMUM OF 12" FOR PIPE SIZES 3"-8" AND 18" FOR PIPE SIZES 10"-18" OR THE SQUARE ROOT OF THE REQUIRED BEARING AREA, WHICHEVER IS GREATER.

2020

IDAHO STANDARDS FOR PUBLIC WORKS CONSTRUCTION	THRUST BLOCK AND AND DETAILS	STANDARD DRAWING NO. SD-403

NOTE: CURRENT ACCEPTED FIRE HYDRANTS(ONLY)
A. WATEROUS PACER (WITH 24" UPPER STANDPIPE)
B. MUELLER CENTURION
C. ALL FIRE HDYRANTS SHALL BE PRESSURE TESTED, DISINFECTED, FLUSHED AND SAMPLED PRIOR TO PLACING IN SERVICE.
D. FIRE HYDRANT MUST BE LEVEL AND PLUMB.
E. CORRECT BURY DEPTH SHALL BE USED FOR NEW INSTALLATIONS. ALL EXTENSIONS TO HAVE PRIOR APPROVAL OF CITY WATER DEPT,
F. TRACER WIRE TO BE A MAXIMUM OF 2' ABOVE FINAL GRADE AND SHALL NOT BE TIED TO HYDRANT AT FINSH OF PROJECT.

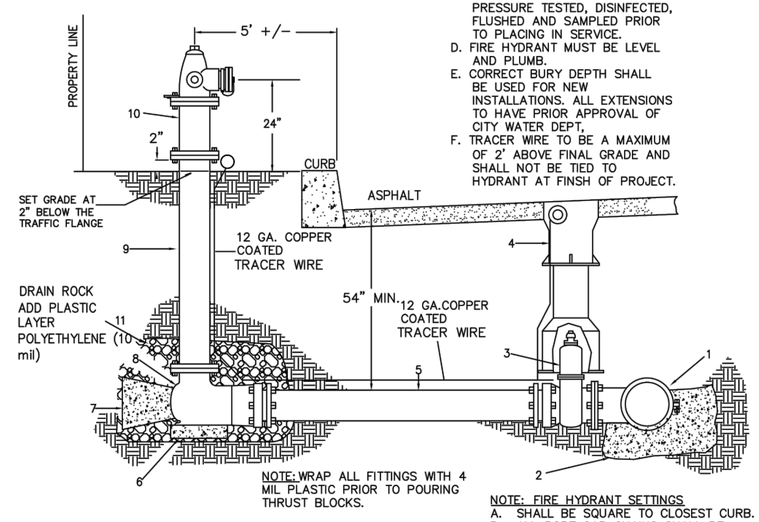

NOTE: WRAP ALL FITTINGS WITH 4 MIL PLASTIC PRIOR TO POURING THRUST BLOCKS.

NOTE: FIRE HYDRANT SETTINGS
A. SHALL BE SQUARE TO CLOSEST CURB.
B. ALL PORT CAP CHAINS SHALL BE ATTACHED TO CAPS AND HYDRANT.
C. ALL FIRE HYDRANTS SHALL BE SAFETY CHROME RED ONLY!
D. ALL FIRE HYDRANTS SHALL BE A MINIMUM OF 5' FROM DRIVEWAYS OR OTHER FIXED OBSTRUCTIONS.
E. BOLLARDS MAY BE REQUIRED FOR ADDITIONAL PROTECTION BY FIRE DEPT.
F. LIVE TAPS ONLY WHEN ATTACHING TO EXISTING WATER MAINS.

HYDRANT SPECIFICATIONS

* 6" DRYBARREL FIRE HYDRANT SUITABLE FOR A 5' TRENCH.
* 6" MECHANICAL JOINT BOTTOM CONNECTION.
* 1 1/2" PENTAGON OPERATING NUT, OPEN LEFT.
* TWO 2 1/2" HOSE NOZZLES NST.
* ONE PUMPER NOZZLE 4 1/2" STORZ PORT.
* HYDRANT COLOR-RED.
* 150 IBS. W.W.P., 300 IBS. WTP.
* MODERN PROFILE TYPE.

ITEM NO.	NO. REQ'D	DESCRIPTION
1	1	MAIN SIZE MJ x 6" FLANGE CAST IRON TEE OR DIRECT TAP SADDLE.
2	1	CONCRETE BLOCKING PER ISPWC SD-403.
3	1	6" FLANGE x MJ GATE VALVE
4	1	TYLER CAST IRON VALVE BOX W/LID. SERIES 6855 OR APPROVED EQUAL.
5	1	6" C-900 PVC PIPE x REQ'D LENGTH OR APPROVED EQUAL. BELL RESTRAINTS REQUIRED IF MORE THAN ONE STICK OF PIPE.
6	1	CONCRETE BLOCKING - 12" WIDE x 12" LONG x 4" THICK.
7	1	CONCRETE BLOCKING PER ISPWC SD-403.
8	1	BASE
9	1	EXTENSION - SIZED AS NEEDED FOR CORRECT BURY DEPTH.
10	1	FIRE HYDRANT - 5 1/4 WATEROUS PACER TRAFFIC MODEL OR MUELLER CENTURION MODEL 200.
11	1	PLACE POLYETHYLENE SHEET (10 mil.) BETWEEN DRAIN ROCK AND NATIVE.
		NOTE: NUMBERS 8-10 COME PREASSEMBLED AS ONE UNIT. NOTE: ONLY NEW ASSEMBLIES WILL BE USED TO REPLACE OR RELOCATE AN EXISTING HYDRANT

REVISION	APPROVED	DATE	CITY OF MOSCOW STANDARD DRAWING	APPROVED BY:
			TYPICAL 6" FIRE HYDRANT SETTING	CITY ENGINEER, PE 10804 DATE:
				DWG NO. MSD-400.2

COPYRIGHT 2022
Welch~Comer & Associates, Inc.
This document, and ideas and designs incorporated herein, as an instrument of professional service, is the property of Welch~Comer & Associates, Inc., and is not to be used in whole or in part for any other project without the written authorization of Welch~Comer & Associates, Inc.

PROFESSIONAL ENGINEER LICENSED 15695 STATE OF IDAHO ADAM J DORSEY
11/30/22

WELCH-COMER ENGINEERS | SURVEYORS
www.welchcomer.com 208-664-9382
330 E. Lakeside Ave, Suite 101 (toll free) 877-815-5672
Coeur d'Alene, ID 83814 (fax) 208-664-5946

NO.	DATE	REVISION DESCRIPTION	BY

CITY OF MOSCOW
LILLY ST. RECONSTRUCTION
'A' ST. TO THIRD ST.

DETAILS

PROJ NO:	46016.01
DESIGNED BY:	AJD
DRAWN BY:	TJF
CHECKED BY:	AJD
DWG NAME:	46016.01DT01.DWG
DATE:	01-10-2022
SHEET NO:	DT8

WATER MAIN FLUSHING

	EFFLUENT FLOW REQUIRED TO PRODUCE 3.0 F.FPS (APPROX.)	SIZE OF FLUSHING TAP (INCH) (1")	(1 1/2")	(2")	NUMBER OF HYDRANT OUTLETS	
PIPE DIAMETER (INCH)	VELOCITY IN MAIN, (GPM)	NUMBER OF TAPS ON PIPE (2)			2.5–INCH	4.5–INCH
4"	120	1			1	1
6"	260		1		1	1
8"	470		2		1	1
10"	730		3	2	1	1
12"	1,060			3	2	1
16"	1,880			5	2	1
18"	2000			6	1	1
20"	2500			8	1	1
24"	3500			11	2	1
(1)	WITH A 40 PSI RESIDUAL PRESSURE IN THE MAIN WITH THE FIRE HYDRANT OR FLUSH PORT FLOWING TO ATMOSPHERE, A 2 1/2" HYDRANT OUTLET WILL DISCHARGE APPROX. 1000 GPM AND A 4 1/2" HYDRANT NOZZLE WILL DISCHARGE APPROX. 2500 GPM					
(2)	NUMBER OF TAPS ON PIPE BASED ON DISCHARGE RATE THROUGH 5 FEET OF BRASS PIPE WITH ONE 90 DEGREE ELBOW.					

FLUSHING:

1. MAINS DO NOT NEED TO BE THOROUGHLY FLUSHED PRIOR TO PRESSURE TEST. FLUSH ONLY ENOUGH TO RELEASE ANY TRAPPED AIR. BACTERIA TEST SAMPLES WILL BE COMPLETED AND PASSED BEFORE PRESSURING TESTING.
2. MUST USE A MINIMUM SCOURING VELOCITY OF 2.5 FEET PER SECOND (FPS).
3. IF NO FIRE HYDRANT IS PROVIDED NEAR THE END OF THE MAIN, PROVIDE A FLUSHING TAP OF THE SIZE SUFFICIENT TO PROVIDE A MINIMUM VELOCITY IN THE MAIN OF 2.5 FPS.
4. REFER TO THE TABLE ABOVE FOR THE MINIMUM VELOCITY REQUIRED THROUGH A FLUSH PORT OR FIRE HYDRANT TO ACHIEVE SCOURING VELOCITY.
5. EXERCISE EXTREME CARE AND CONDUCT A THOROUGH INSPECTION DURING WATER MAIN INSTALLATION TO PREVENT SMALL STONES, CONCRETE, WILDLIFE AND DEBRIS FROM ENTERING THE MAINS.
6. CLEAR LARGE MATERIAL BY FLUSHING AND INSPECTING ALL HYDRANTS ON THE MAINS TO ENSURE THAT ALL VALVES ARE CLEAR AND AND IN GOOD CONDITION.
7. CONTRACTOR MUST RECEIVE APPROVAL FROM THE MOSCOW WATER DEPT. PRIOR TO FLUSHING ANY WATER MAIN.
8. THE MOSCOW WATER DEPT. WILL NOT BE LIABLE FOR ANY DAMAGE CAUSED BY THE CONTRACTOR WHILE FLUSHING A WATER MAIN. IT WILL BE THE CONTRACTOR'S RESPONSIBILITY TO DETERMINE WHERE TO DISPOSE OF EXCESS WATER.

REVISION	APPROVED	DATE	CITY OF MOSCOW STANDARD DRAWING	APPROVED BY:
			WATER MAIN FLUSHING CHART	CITY ENGINEER, PE 10804 — DATE:
				DWG NO. MSD-400.17

ALLOWABLE LEAKAGE FOR AWWA PVC PIPE C-900

Allowable Leakage per 1000' or 50 joints: gal/hr x 2

Average Test Pressure in Line: psi

Nominal Pipe Size (in.)	150	175	200	225	250	275	300
4	0.33	0.36	0.38	0.41	0.43	0.45	0.47
6	0.50	0.54	0.57	0.61	0.64	0.67	0.70
8	0.66	0.72	0.76	0.81	0.85	0.90	0.94
10	0.83	0.89	0.96	1.01	1.07	1.12	1.17
12	0.99	1.07	1.15	1.22	1.28	1.34	1.40
14	0.83	1.25	1.34	1.42	1.50	1.57	1.64
16	1.32	1.43	1.53	1.62	1.71	1.79	1.87
18	1.49	1.61	1.72	1.82	1.92	2.02	2.11
20	1.66	1.79	1.91	2.03	2.14	2.24	2.34
24	1.99	2.15	2.29	2.43	2.56	2.69	2.81
30	2.48	2.68	2.87	3.04	3.21	3.36	3.51
36	2.98	3.22	3.44	3.65	3.85	4.03	4.21
42	3.48	3.75	4.01	4.26	4.49	4.71	4.92
48	3.97	4.29	4.59	4.86	5.13	5.38	5.62

NOTE:

To calculate the allowable leakage for the pressure test, take the total footage of each individual size of main and divide by 1000, and then multiply results by allowable leak loss per table above. This will give the allowable loss per hour which then can be multiplied by 2 hours to give the total allowable leak loss (see example below). If several pipe sizes are installed, th calculate for each size and add total quantities if performing one test.

Testing 1,180' of 8" C900 PVC pipe: 1180/1000 = 1.180 X 0.66 = .778 X 2 hrs = 1.557 gals. total allowable leak loss.

Testing 1,244' of 12" C900 and 660' of 6" C900: 1244/1000 = 1.244 x 0.99 = 1.23 X 2 hrs = 2.46 gals. Plus, 660/1000 = 0.66 X 0.50 = 0.33 X 2 hrs = 0.66 gals. For a total 3.12 gals. Of allowable leak loss.

REVISION	APPROVED	DATE	CITY OF COEUR d'ALENE STANDARD DRAWING	APPROVED BY:
			ALLOWABLE LEAK LOSS TABLE	CITY ENGINEER, PE — DATE:
				DWG NO. MSD-400.19

COPYRIGHT 2022
Welch~Comer & Associates, Inc.
This document, and ideas and designs incorporated herein, as an instrument of professional service, is the property of Welch~Comer & Associates, Inc., and is not to be used in whole or in part for any other project without the written authorization of Welch~Comer & Associates, Inc.

PROFESSIONAL ENGINEER LICENSED 15695 STATE OF IDAHO ADAM J DORSEY

11/30/22

WELCH-COMER ENGINEERS | SURVEYORS
www.welchcomer.com 208–664–9382
330 E. Lakeside Ave, Suite 101 (toll free) 877–815–5672
Coeur d'Alene, ID 83814 (fax) 208–664–5946

NO.	DATE	REVISION DESCRIPTION	BY

CITY OF MOSCOW
LILLY ST. RECONSTRUCTION
'A' ST. TO THIRD ST.

DETAILS

PROJ NO:	46016.01
DESIGNED BY:	AJD
DRAWN BY:	TJF
CHECKED BY:	AJD
DWG NAME:	46016.01DT01.DWG
DATE:	01–06–2022
SHEET NO:	DT9

NOTES:

1. HYDROSEED ALL DISTURBED AREA UNLESS OTHERWISE NOTED. PROVIDE 2' TOPSOIL WITH HYDROSEED.
2. ALL AGGREGATE DEPTH WILL BE 4".

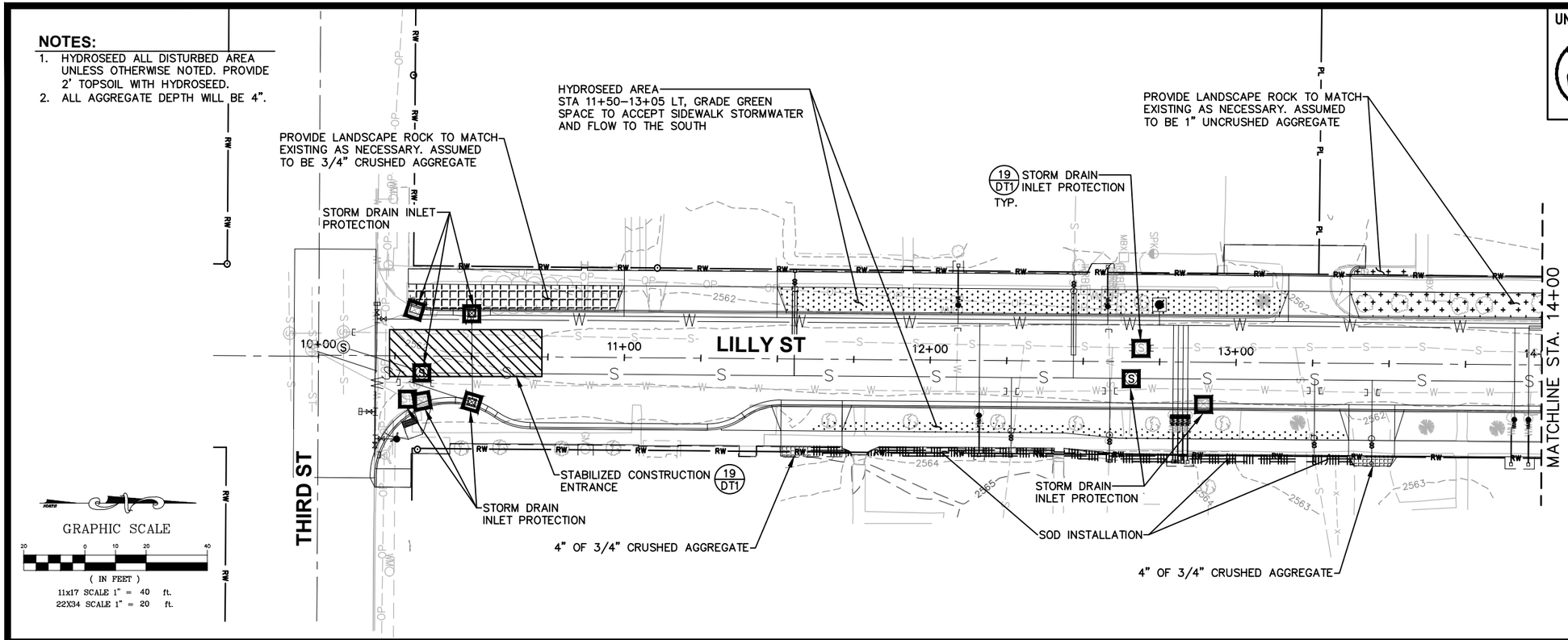

NOTES:

1. HYDROSEED ALL DISTURBED AREA UNLESS OTHERWISE NOTED. PROVIDE 2' TOPSOIL WITH HYDROSEED.
2. ALL AGGREGATE DEPTH WILL BE 4".

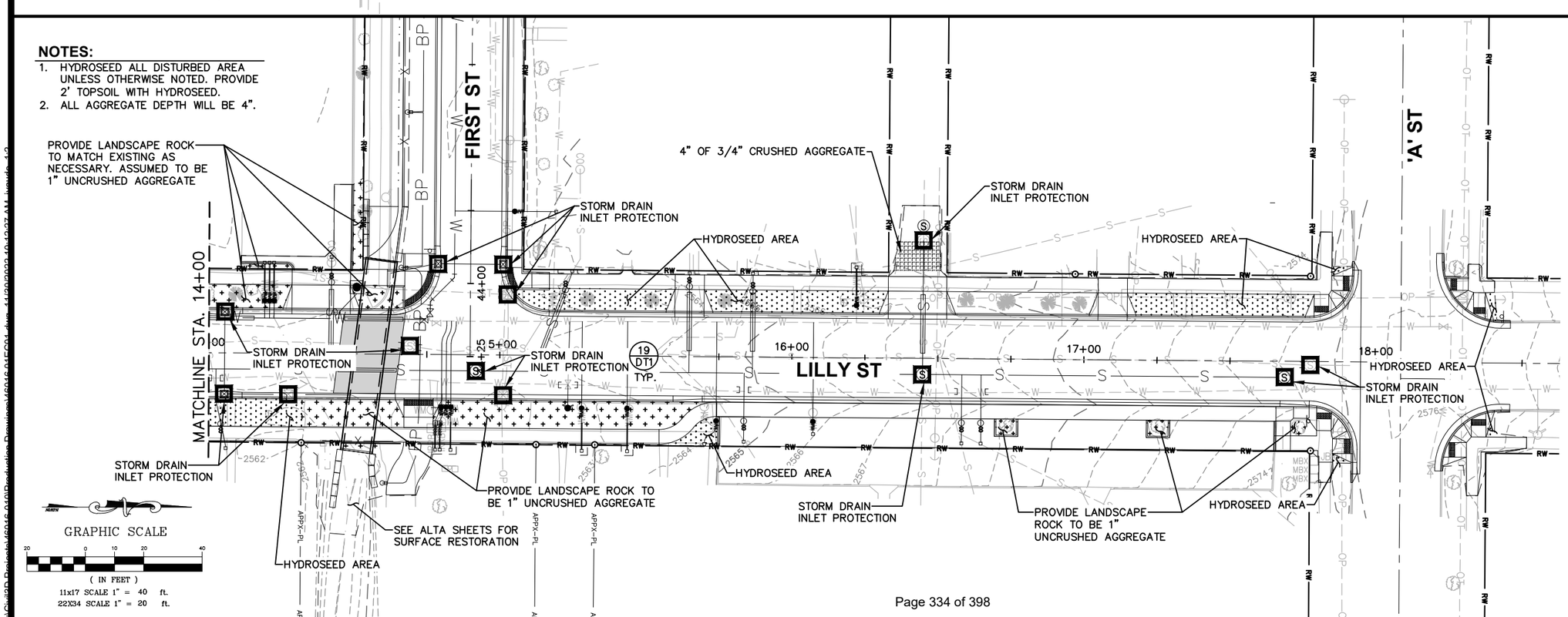

UNDERGROUND SERVICE ALERT
ONE-CALL NUMBER
811
CALL TWO BUSINESS DAYS BEFORE YOU DIG

COPYRIGHT 2022
Welch~Comer & Associates, Inc.
This document, and ideas and designs incorporated herein, as an instrument of professional service, is the property of Welch~Comer & Associates, Inc., and is not to be used in whole or in part for any other project without the written authorization of Welch~Comer & Associates, Inc.

PROFESSIONAL ENGINEER LICENSED 15695 STATE OF IDAHO ADAM J DORSEY

11/30/22

WELCH-COMER
ENGINEERS | SURVEYORS
www.welchcomer.com 208-664-9382
330 E. Lakeside Ave, Suite 101 (toll free) 877-815-5672
Coeur d'Alene, ID 83814 (fax) 208-664-5946

NO.	DATE	REVISION DESCRIPTION	BY

CITY OF MOSCOW

LILLY ST. RECONSTRUCTION
'A' ST. TO THIRD ST.

LILLY STREET
TEMPORARY EROSION AND SEDIMENT CONTROL PLAN

PROJ NO:	46016.01
DESIGNED BY:	AJD
DRAWN BY:	TJF
CHECKED BY:	AJD
DWG NAME:	46016.01EC01.DWG
DATE:	01-06-2022
SHEET NO:	EC1

NOTES:

1. HYDROSEED ALL DISTURBED AREA UNLESS OTHERWISE NOTED. PROVIDE 2' TOPSOIL WITH HYDROSEED.
2. ALL AGGREGATE DEPTH WILL BE 4".

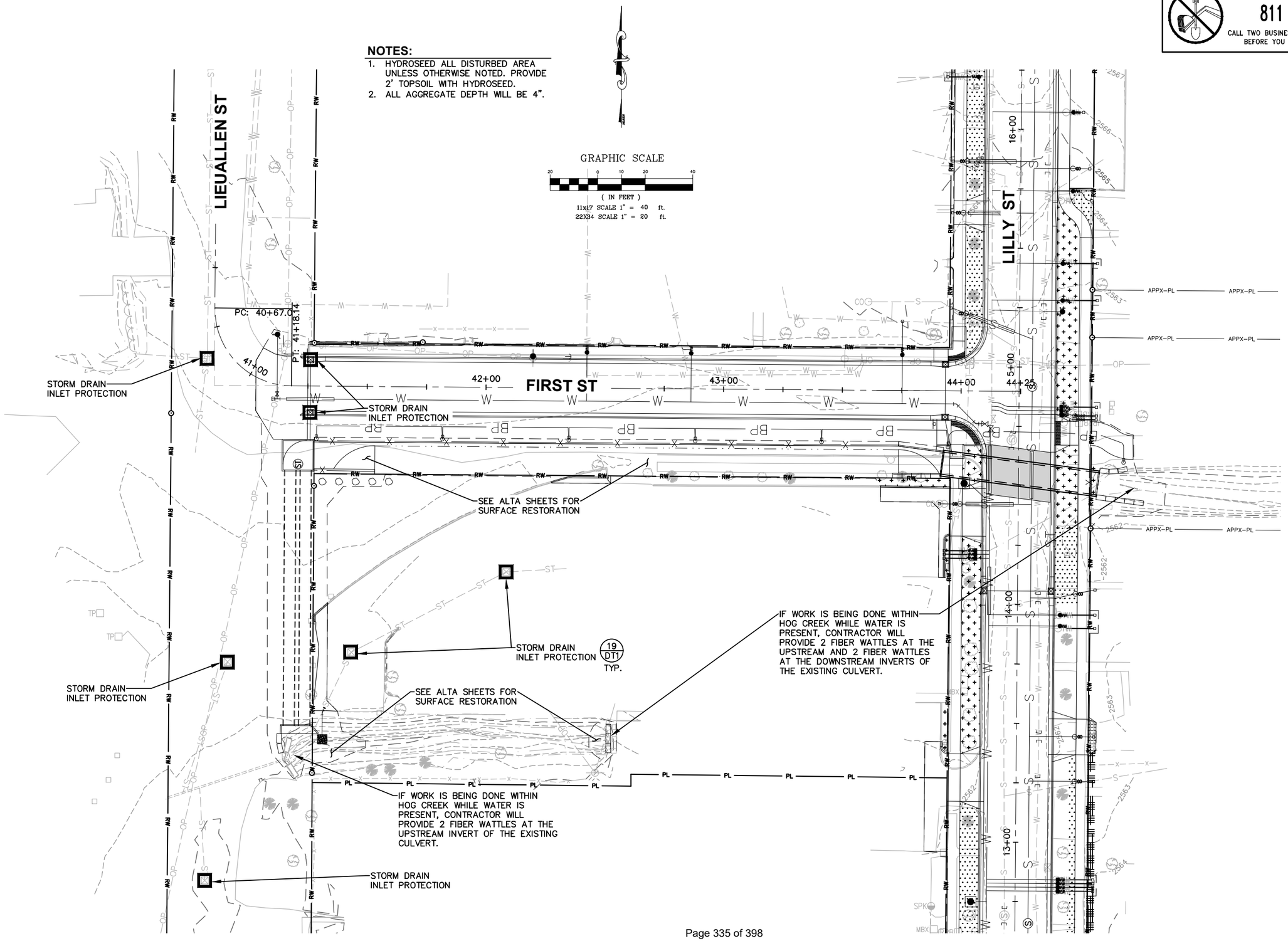

UNDERGROUND SERVICE ALERT
ONE-CALL NUMBER
811
CALL TWO BUSINESS DAYS BEFORE YOU DIG

COPYRIGHT 2022
Welch~Comer & Associates, Inc.
This document, and ideas and designs incorporated herein, as an instrument of professional service, is the property of Welch~Comer & Associates, Inc., and is not to be used in whole or in part for any other project without the written authorization of Welch~Comer & Associates, Inc.

PROFESSIONAL ENGINEER
LICENSED
15695
STATE OF IDAHO
ADAM J DORSEY

11/30/22

WELCH-COMER
ENGINEERS | SURVEYORS
www.welchcomer.com
330 E. Lakeside Ave, Suite 101
Coeur d'Alene, ID 83814
208-664-9382
(toll free) 877-815-5672
(fax) 208-664-5946

NO.	DATE	REVISION DESCRIPTION	BY

CITY OF MOSCOW
LILLY ST. RECONSTRUCTION
'A' ST. TO THIRD ST.

FIRST STREET
TEMPORARY EROSION AND SEDIMENT CONTROL PLAN

PROJ NO:	46016.01
DESIGNED BY:	AJD
DRAWN BY:	TJF
CHECKED BY:	AJD
DWG NAME:	46016.01EC01.DWG
DATE:	01-06-2022
SHEET NO:	EC2

TRAFFIC CONTROL PLAN

NOTES:

1. FABRICATION AND INSTALLATION OF TRAFFIC CONTROL DEVICES SHALL CONFORM TO ALL APPLICABLE PROVISIONS OF THE FHWA'S MANUAL ON UNIFORM TRAFFIC CONTROL DEVICES AS ADOPTED BY THE STATE.
2. FOR THE DURATION OF THIS PROJECT, THE OVERALL EFFECTIVENESS UNDER BOTH NIGHT AND DAY CONDITIONS AND THE PLACEMENT OF THESE INSTALLATIONS SHALL BE MONITORED.
3. ALL SIGNS SHALL BE MOUNTED IN A HIGH–PROFILE MANNER (SEE THE MUTCD, PART 6 FIG. 6F–2). ALL SIGNS REMAINING UP FOR THE DURATION OF THE PROJECT SHOULD BE PLACED ON GROUND MOUNT WOOD POSTS.
4. ALL EXISTING SIGNING THAT CONFLICT WITH THE TRAFFIC CONTROL SHALL BE COVERED UP OR REMOVED AND SHALL BE INCIDENTAL TO 6971 – PROJECT TEMPORARY TRAFFIC CONTROL. IF THE CONTRACTOR REMOVES THE SIGNS, IT SHALL BE THE CONTRACTORS RESPONSIBILITY TO RESET THE SIGNS AND/OR REPLACE ANY SIGNS THAT ARE DAMAGED AT HIS/HER OWN EXPENSE OR AS DIRECTED BY THE ENGINEER.
5. SEE SPECIFICATIONS FOR ADDITIONAL TRAFFIC CONTROL REQUIREMENTS.
6. USE ONE–WAY TRAFFIC AS SHOWN WHEN PERFORMING WORK IN STATE HIGHWAY 8 OR 'A' STREET, AS NECESSARY.
7. ENCROACHMENT PERMIT & TRAFFIC CONTROL PLAN HAS BEEN APPROVED BY ITD. CONTRACTOR SHALL GET APPROVAL FROM THE CITY AND ITD PRIOR TO MAKING ANY CHANGES TO THE APPROVED TRAFFIC CONTROL PLAN.
8. 'A' STREET AND HIGHWAY 8 CANNOT BE RESTRICTED TO ONE–WAY TRAFFIC AT THE SAME TIME.
9. ALL WORK WITHIN STATE HIGHWAY 8 REQUIRING ONE–LANE FLAGGING SHALL BE RESTRICTED TO NIGHT OPERATIONS. TWO–WAY TRAFFIC ON STATE HIGHWAY 8 IS TO BE MAINTAINED DURING THE DAYLIGHT HOURS. PROVIDE TWO–WAY TRAFFIC CONTROL IN ACCORDANCE WITH MUTCD.
10. WHEN TRAFFIC IS REQUIRED TO TRAVEL OVER TEMPORARY ROADWAY SURFACE, PROVIDE W8–7 LOOSE GRAVEL SIGNS AS NECESSARY. CONTRACTOR TO MAINTAIN TEMPORARY ROADWAY SURFACE AS NECESSARY UNTIL FINAL PAVING IS COMPLETED. TEMPORARY ROADWAY SURFACE SHALL BE FREE OF POTHOLES AND RUTS. MAINTENANCE SHALL ALSO INCLUDE SWEEPING OF EXISTING ROADWAY SURFACES.

SIGN ASSEMBLY LEGEND

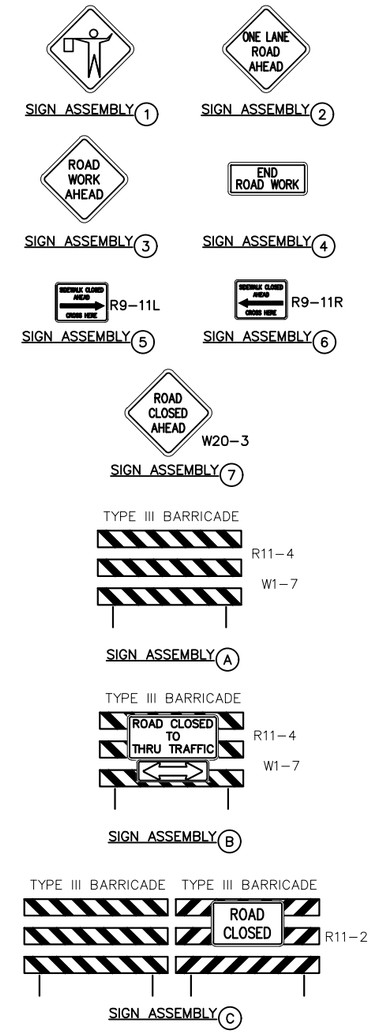

SYMBOL LEGEND:

- PORTABLE DRUMS
- PORTABLE TUBULAR MARKERS
- SIGN
- TYPE III BARRICADE
- FLAGGER

GRAPHIC SCALE

10 0 5 10 20

(IN FEET)

11x17 SCALE 1" = 20 ft.

22X34 SCALE 1" = 10 ft.

COPYRIGHT 2022
Welch~Comer & Associates, Inc.
This document, and ideas and designs incorporated herein, as an instrument of professional service, is the property of Welch~Comer & Associates, Inc., and is not to be used in whole or in part for any other project without the written authorization of Welch~Comer & Associates, Inc.

PROFESSIONAL ENGINEER LICENSED 15695 STATE OF IDAHO ADAM J DORSEY

11/30/22

WELCH-COMER ENGINEERS | SURVEYORS
www.welchcomer.com
330 E. Lakeside Ave, Suite 101
Coeur d'Alene, ID 83814
208–664–9382
(toll free) 877–815–5672
(fax) 208–664–5946

NO.	DATE	REVISION DESCRIPTION	BY

CITY OF MOSCOW

LILLY ST. RECONSTRUCTION
'A' ST. TO THIRD ST.

TRAFFIC CONTROL PLAN
PHASE 1

PROJ NO:	46016.01
DESIGNED BY:	AJD
DRAWN BY:	TJF
CHECKED BY:	AJD
DWG NAME:	46016.01TC01.DWG
DATE:	11–21–2022
SHEET NO:	TC1

TRAFFIC CONTROL PLAN PHASE 2

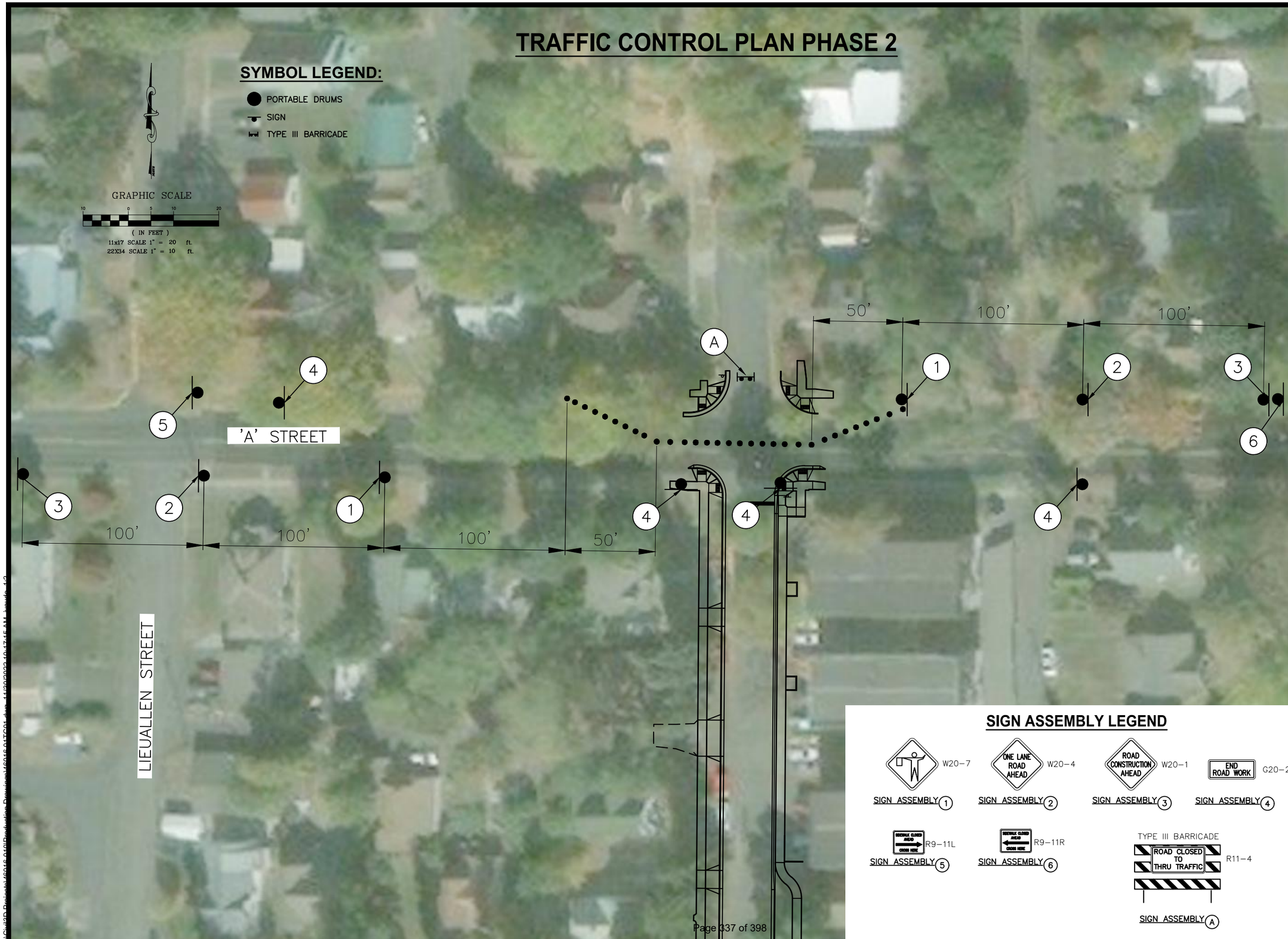

COPYRIGHT 2022
Welch~Comer & Associates, Inc.
This document, and ideas and designs incorporated herein, as an instrument of professional service, is the property of Welch~Comer & Associates, Inc., and is not to be used in whole or in part for any other project without the written authorization of Welch~Comer & Associates, Inc.

PROFESSIONAL ENGINEER
LICENSED
15695
STATE OF IDAHO
ADAM J DORSEY

11/30/22

WELCH-COMER
ENGINEERS | SURVEYORS
www.welchcomer.com 208-664-9382
330 E. Lakeside Ave, Suite 101 (toll free) 877-815-5672
Coeur d'Alene, ID 83814 (fax) 208-664-5946

NO.	DATE	REVISION DESCRIPTION	BY

CITY OF MOSCOW
LILLY ST. RECONSTRUCTION
'A' ST. TO THIRD ST.

TRAFFIC CONTROL PLAN
PHASE 2

PROJECT NO.:	46016.01
DESIGNED BY:	CSH
DRAWN BY:	CSH
CHECKED BY:	AJD
DWG NAME:	46016.01TC01.DWG
DATE:	11-21-2022
SHEET NO:	TC2

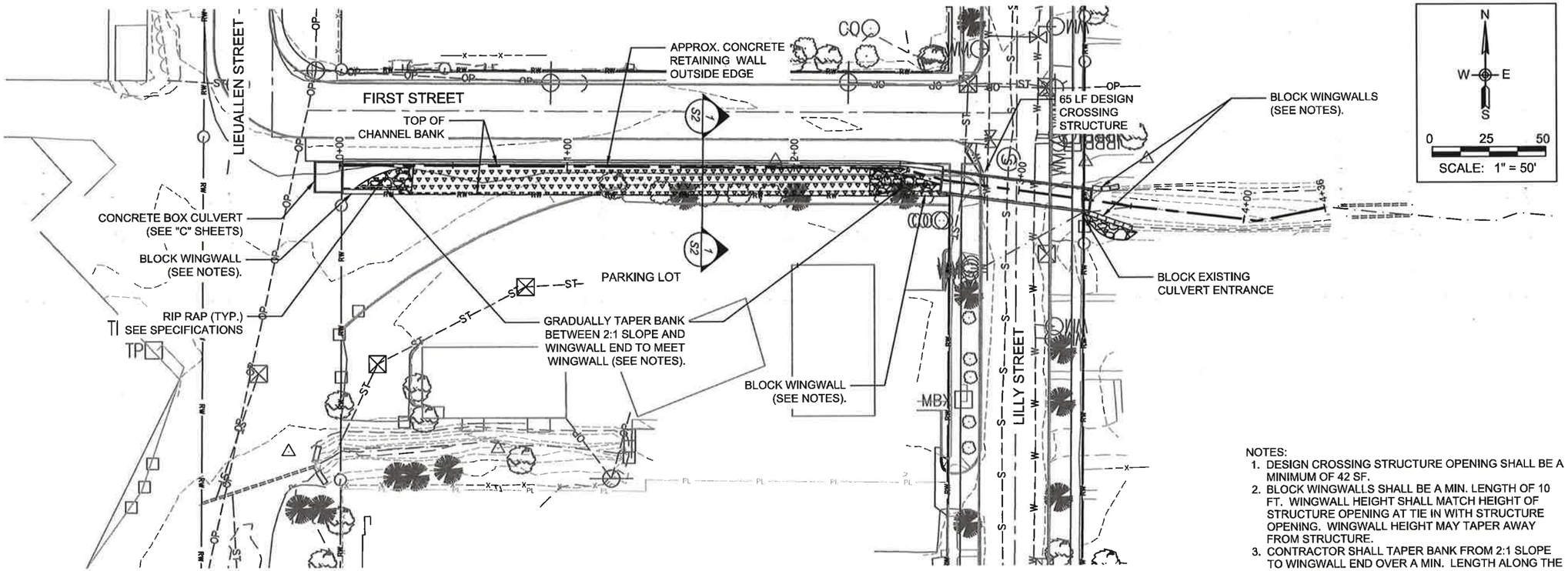

PLAN VIEW
SCALE: 1" = 50'

NOTES:
1. DESIGN CROSSING STRUCTURE OPENING SHALL BE A MINIMUM OF 42 SF.
2. BLOCK WINGWALLS SHALL BE A MIN. LENGTH OF 10 FT. WINGWALL HEIGHT SHALL MATCH HEIGHT OF STRUCTURE OPENING AT TIE IN WITH STRUCTURE OPENING. WINGWALL HEIGHT MAY TAPER AWAY FROM STRUCTURE.
3. CONTRACTOR SHALL TAPER BANK FROM 2:1 SLOPE TO WINGWALL END OVER A MIN. LENGTH ALONG THE CHANNEL CENTER OF 30 FT.

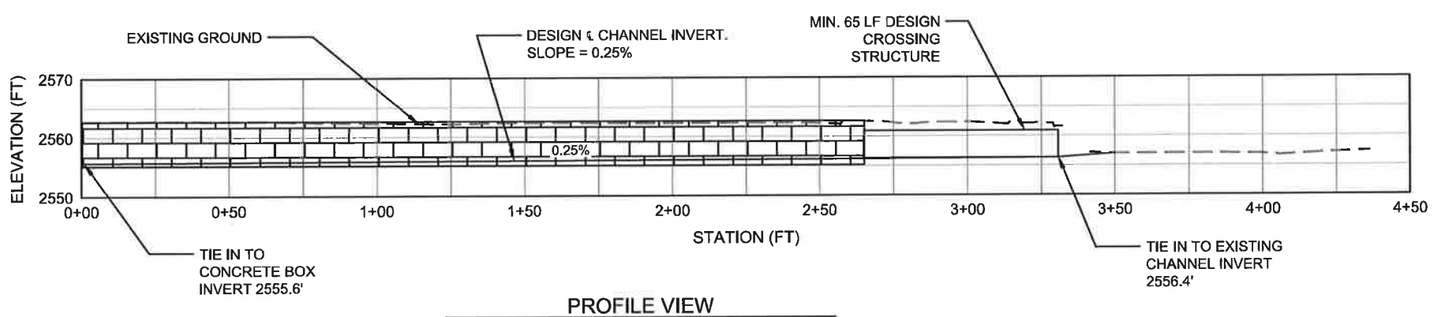

PROFILE VIEW
SCALE: HORIZONTAL: 1" = 50'; VERTICAL: 1" = 10'

LEGEND

EXISTING PROFILE	DESIGN RIP RAP
EXISTING GROUND	DESIGN WING WALL
EXISTING MAJOR CONTOUR	DESIGN RETAINING WALL
EXISTING MINOR CONTOUR	DESIGN CHANNEL TOP OF BANK (TOB)
DETAIL NUMBER	SHEET WHERE DETAIL IS SHOWN
SECTION NUMBER	SHEET WHERE SECTION IS SHOWN

Ø	DIAMETER
"	INCHES
'	FEET
APPROX/~	APPROXIMATE
BMP	BEST MANAGEMENT PRACTICE
CMP	CORRUGATED METAL PIPE
ELEV	ELEVATION
STA	STATION
TBD	TO BE DETERMINED
TOB	TOP OF BANK
TYP	TYPICAL
RW	RIGHT OF WAY

COPYRIGHT 2020
Welch-Comer & Associates, Inc.
This document, and ideas and designs incorporated herein, as an instrument of professional service, is the property of Welch-Comer & Associates, Inc., and is not to be used in whole or in part for any other project without the written authorization of Welch-Comer & Associates, Inc.

PROFESSIONAL ENGINEER LICENSED 12040 STATE OF IDAHO SUSAN FIROR
March 16, 2021

WELCH-COMER ENGINEERS | SURVEYORS
www.welchcomer.com
330 E. Lakeside Ave, Suite 101
Coeur d'Alene, ID 83814
208-664-9382
(toll free) 877-815-5672
(fax) 208-664-5946

NO.	DATE	REVISION DESCRIPTION	BY

CITY OF MOSCOW
LILLY STREET AND FIRST STREET IMPROVEMENTS

HOG CREEK PLAN & PROFILE

PROJ NO:	46016.01
DESIGNED BY:	J. DZARA
DRAWN BY:	J. DZARA/B. ROLLINS
CHECKED BY:	S. FIROR
DWG NAME:	LILLY ST_20201201.DWG
DATE:	12-01-2020
SHEET NO:	CR1

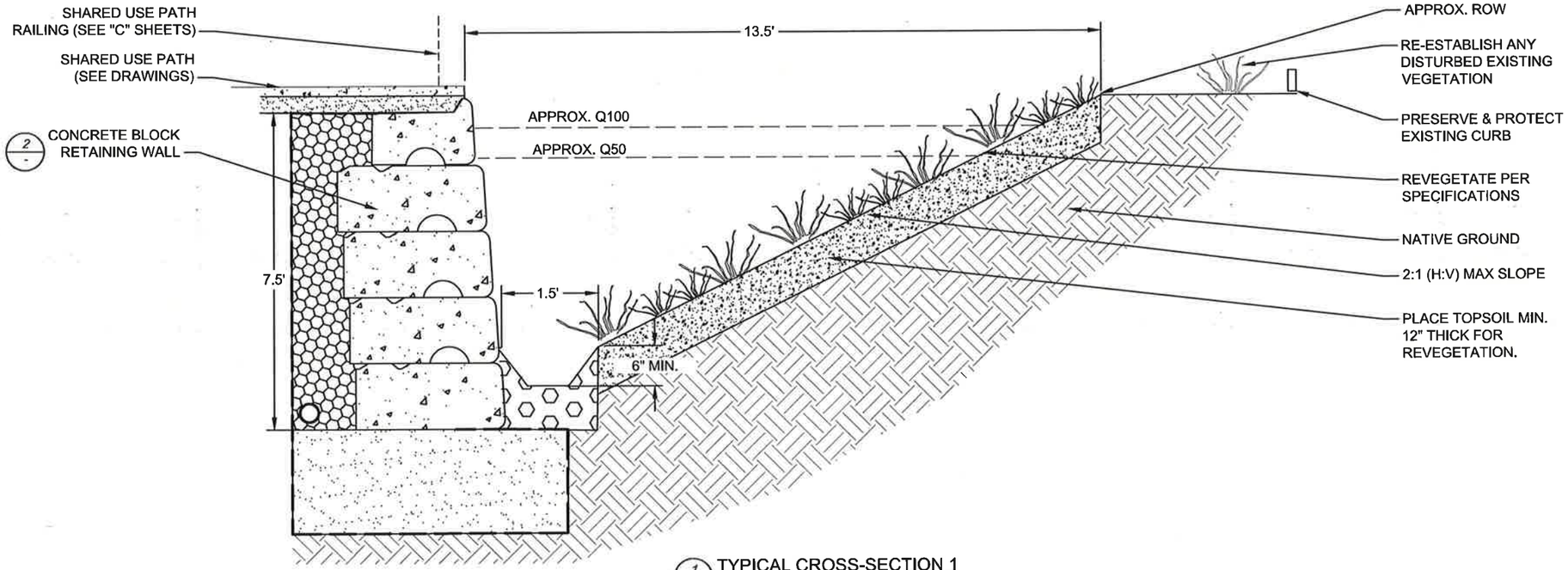

1 TYPICAL CROSS-SECTION 1
SCALE: NTS (STA.: 0+00 - 2+65)

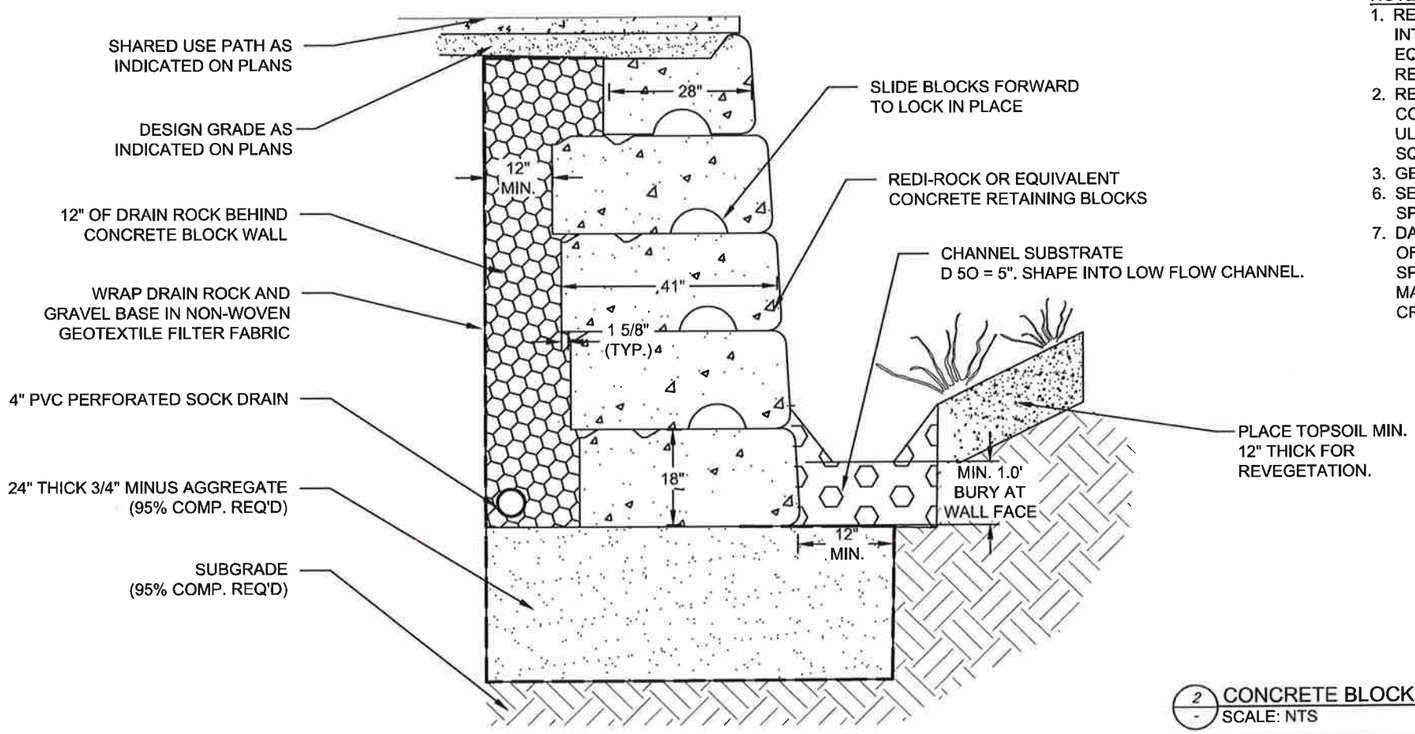

2 CONCRETE BLOCK RETAINING WALL INSTALLATION
SCALE: NTS

NOTES:
1. RETAINING WALL SHALL BE CONSTRUCTED USING INTERLOCKING CONCRETE BLOCKS (REDI ROCK OR EQUIVALENT) AND INSTALLED PER MANUFACTURER'S REQUIREMENTS.
2. RETAINING WALL INSTALLED ON THE COMPACTED BASE COURSE AS SHOWN SHALL BE DESIGNED FOR AN ULTIMATE BEARING CAPACITY OF 7,500 POUNDS PER SQUARE INCH.
3. GEOTECHNICAL REPORT AVAILABLE UPON REQUEST.
6. SEE SPECIFICATIONS FOR SEEDING & PLANTING SPECIFICATION.
7. DAYLIGHT PERFORATED DRAIN PIPE TO CHANNEL A MIN. OF EVERY 50 LF OF CONC. BLOCK WALL, OR AS SPECIFIED BY CONCRETE BLOCK WALL MANUFACTURER. SEE DETAIL 1 AND DETAIL 2 ON SHEET CR2.

COPYRIGHT 2020
Welch-Comer & Associates, Inc.
This document, and ideas and designs incorporated herein, as an instrument of professional service, is the property of Welch-Comer & Associates, Inc., and is not to be used in whole or in part for any other project without the written authorization of Welch-Comer & Associates, Inc.

PROFESSIONAL ENGINEER LICENSED 12040 STATE OF IDAHO SUSAN FIROR
March 16, 2021

WELCH-COMER ENGINEERS | SURVEYORS
www.welchcomer.com
330 E. Lakeside Ave, Suite 101
Coeur d'Alene, ID 83814
208-664-9382
(toll free) 877-815-5672
(fax) 208-664-5946

NO.	DATE	REVISION DESCRIPTION	BY

CITY OF MOSCOW
LILLY STREET AND FIRST STREET IMPROVEMENTS

HOG CREEK CROSS SECTIONS

PROJ NO:	46016.01
DESIGNED BY:	J. DZARA
DRAWN BY:	J. DZARA/B. ROLLINS
CHECKED BY:	S. FIROR
DWG NAME:	LILLY ST_20201201.DWG
DATE:	12-01-2020
SHEET NO:	CR2

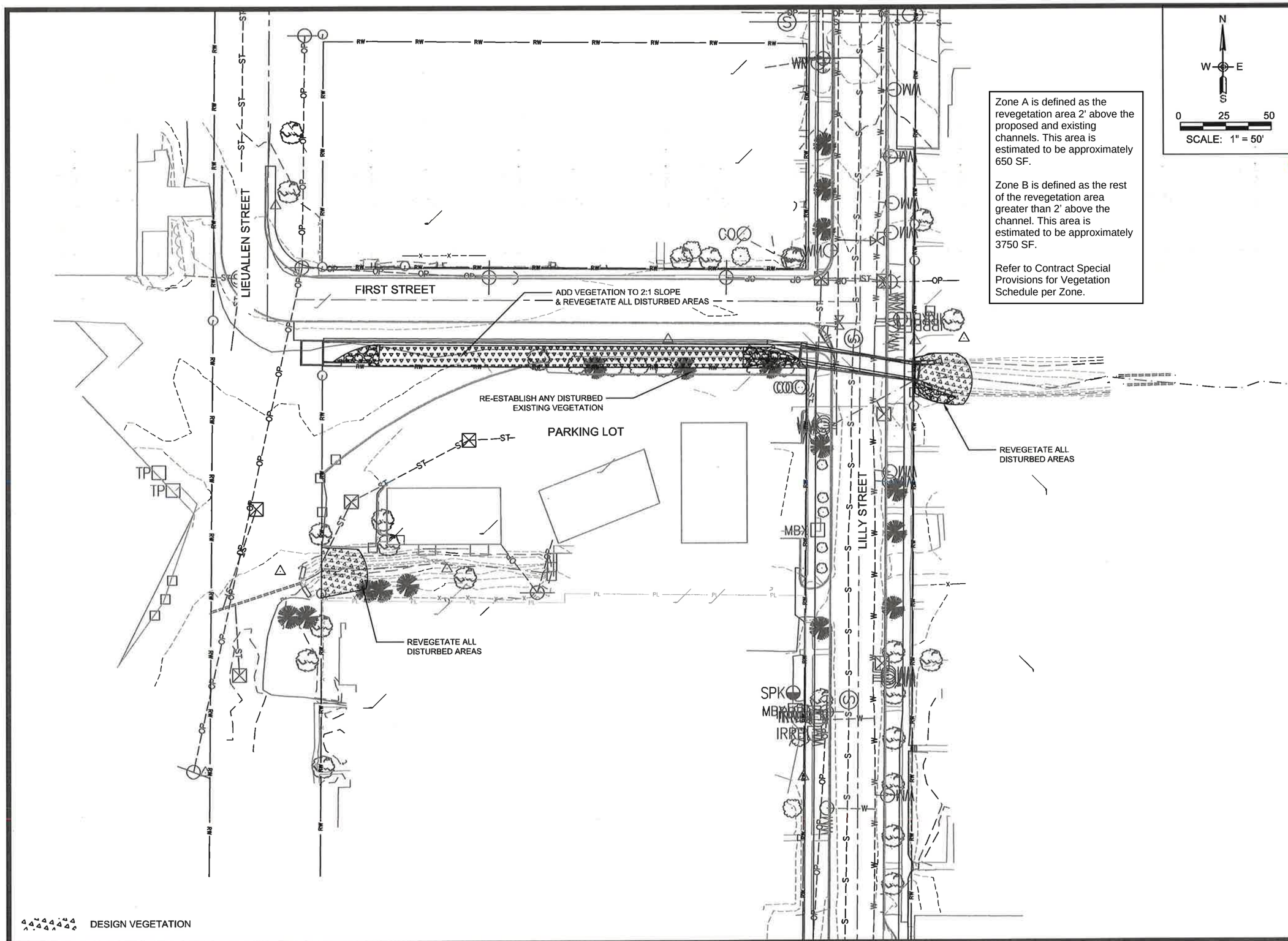

Zone A is defined as the revegetation area 2' above the proposed and existing channels. This area is estimated to be approximately 650 SF.

Zone B is defined as the rest of the revegetation area greater than 2' above the channel. This area is estimated to be approximately 3750 SF.

Refer to Contract Special Provisions for Vegetation Schedule per Zone.

N
W E
S

0 25 50
SCALE: 1" = 50'

COPYRIGHT 2020
Welch-Comer & Associates, Inc.
This document, and ideas and designs incorporated herein, as an instrument of professional service, is the property of Welch-Comer & Associates, Inc., and is not to be used in whole or in part for any other project without the written authorization of Welch-Comer & Associates, Inc.

PROFESSIONAL ENGINEER
LICENSED
12040
STATE OF IDAHO
SUSAN FIROR

March 16, 2021

WELCH-COMER
ENGINEERS | SURVEYORS
www.welchcomer.com
330 E. Lakeside Ave, Suite 101
Coeur d'Alene, ID 83814
208-664-9382
(toll free) 877-815-5672
(fax) 208-664-5946

NO.	DATE	REVISION DESCRIPTION	BY

CITY OF MOSCOW
LILLY STREET AND
FIRST STREET IMPROVEMENTS

REVEGETATION PLAN

PROJ NO:	46016.01
DESIGNED BY:	J. DZARA
DRAWN BY:	J. DZARA/B. ROLLINS
CHECKED BY:	S. FIROR
DWG NAME:	LILLY ST_20201201.DWG
DATE:	12-01-2020
SHEET NO:	CR3

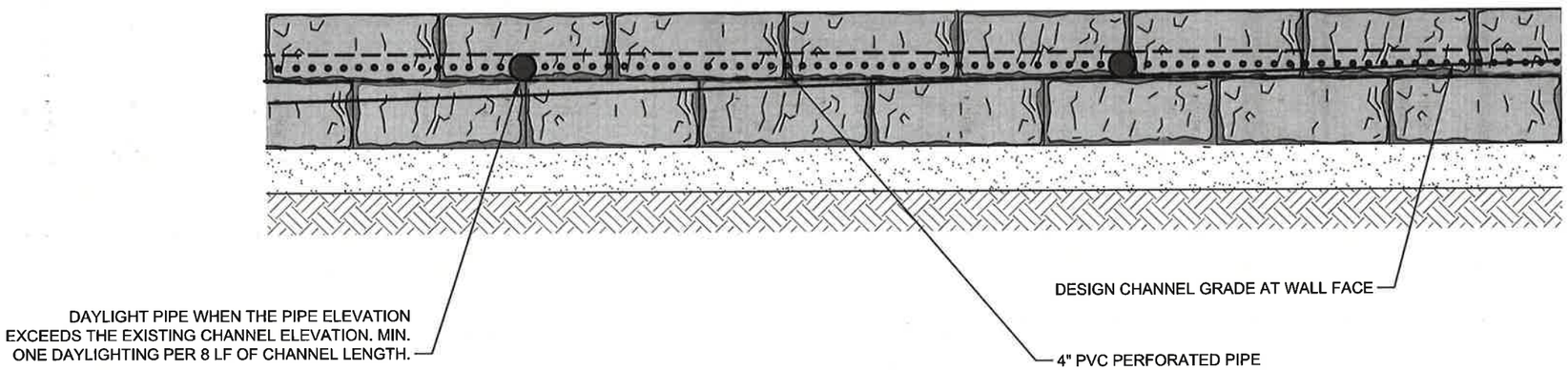

1 SOCK DRAIN DETAILS - PROFILE VIEW
SCALE: NTS

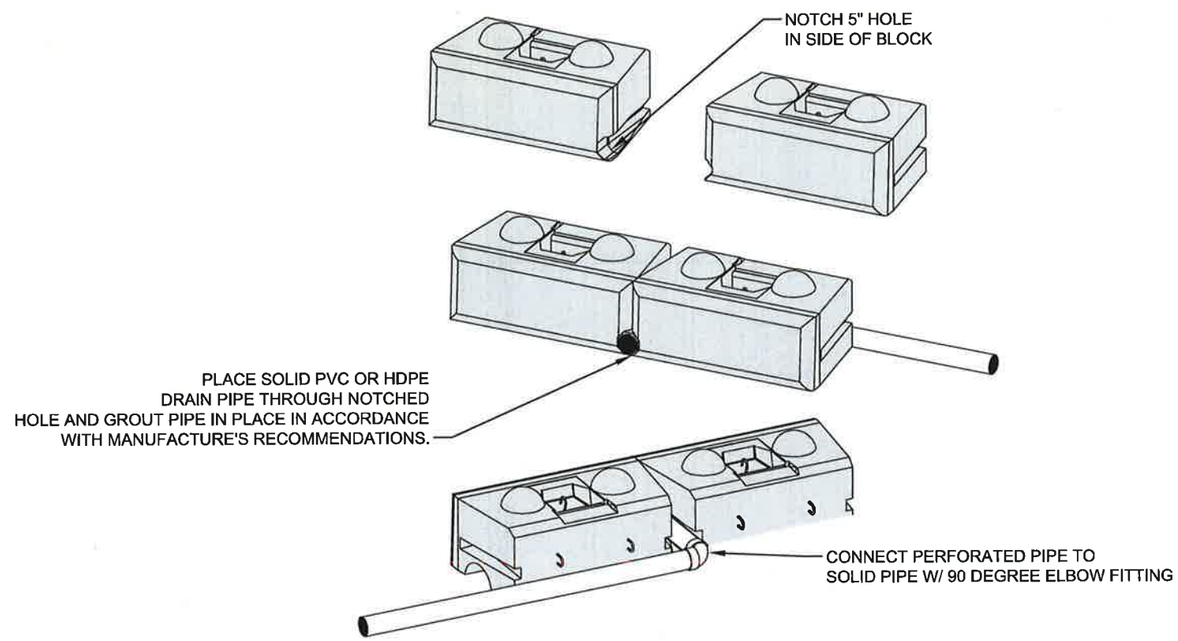

2 SOCK DRAIN DETAILS - ISOMETRIC VIEW
SCALE: NTS

COPYRIGHT 2020
Welch-Comer & Associates, Inc.
This document, and ideas and designs incorporated herein, as an instrument of professional service, is the property of Welch-Comer & Associates, Inc., and is not to be used in whole or in part for any other project without the written authorization of Welch-Comer & Associates, Inc.

PROFESSIONAL ENGINEER
LICENSED
12040
STATE OF IDAHO
SUSAN FIROR
March 16, 2021

WELCH-COMER
ENGINEERS | SURVEYORS
www.welchcomer.com
330 E. Lakeside Ave, Suite 101
Coeur d'Alene, ID 83814
208-664-9382
(toll free) 877-815-5672
(fax) 208-664-5946

NO.	DATE	REVISION DESCRIPTION	BY

CITY OF MOSCOW
LILLY STREET AND
FIRST STREET IMPROVEMENTS

SOCK DRAIN DETAILS

PROJ NO:	46016.01
DESIGNED BY:	J. DZARA
DRAWN BY:	J. DZARA/B. ROLLINS
CHECKED BY:	S. FIROR
DWG NAME:	LILLY ST_20201201.DWG
DATE:	12-01-2020
SHEET NO:	CR4

?RR?AF KCLR @

BIG SKY
CORPORATION
10063 N Navion Drive.
Hayden, ID 83835

CITY OF MOSCOW
COMMUNITY DEV ENGINEERING DIVISION
504 S WASHINGTON ST
MOSCOW, ID 83843

BID ENCLOSED: LILLY STREET RECONSTRUCTION 'A' STREET TO THIRD ST - REBID

RECEIVED
JAN 10 2023
1:46pm

BID PROPOSAL

TO: Mayor and City Council
City of Moscow, Idaho

Date: 1/10/23

This proposal is submitted as an offer by the undersigned to enter into contract with the City of Moscow, Idaho as represented by the City Council, hereinafter referred to as the 'CITY' for LILLY STREET RECONSTRUCTION 'A' ST. TO THIRD ST. - REBID, (hereinafter "Project"), specified herein and which construction documents are on file with the City Engineer, Haddock Building, 504 S. Washington Street, Moscow, Idaho, and which are a condition hereof with the same force and effect as though they were attached hereto. The offer is conditioned on the following declarations as to the facts, intention and understanding of the undersigned and the agreement of the CITY to the terms and prices herein submitted.

1. All Project specifications and drawings examined by the undersigned and their terms and conditions are hereby agreed to.

2. The undersigned certifies that he/she has received or made himself/herself aware of any and all existing site conditions that may affect the proposed work.

3. It is understood that the contract drawings may be supplemented by additional drawings and specifications in explanation and elaboration of the contract drawings, and it is agreed that such supplemental drawings, when not in conflict with those referred to in paragraph 1 above, will have the same force and effect as if attached hereto and that when received they will be considered a part of the contract.

4. The undersigned will furnish separate performance and payment bonds in the full amount of the contract price.

5. The cash, certified check, bid bond, or cashier's check accompanying this proposal shall be forfeited to the City of Moscow, Idaho to the extent of 5% of the amount bid if the undersigned shall fail or refuse to execute the contract, furnish performance and payment bonds, and insurance certificate as required by the specifications within the time limit therein after notification that the said proposal is accepted, all in accordance with the provisions of this proposal and the specifications.

6. The undersigned further agrees that CITY shall have the right to accept or reject any bid which rejection or acceptance is deemed to be in the best interest of CITY.

7. The undersigned agrees to order all necessary equipment and materials within a period of three (3) days after Notice to Proceed has been issued by the City Engineer.

8. The undersigned, as a bidder, acknowledges that Addenda Number 1 through 2 have been delivered to him/her and have been examined as part of the contract documents.

9. The undersigned agrees to complete all work embraced in the contract within the time limitations set forth in paragraph IB-13 of the Instruction to Bidders.

10. The undersigned holds Idaho Public Work's License Number 002207-U.

11. The undersigned proposes to use the following sub-contractors in the performance of meeting the contract requirements. Information herein must comply with Idaho Code Section 67-2310 and IB-16:

Subcontractors	Trade Specialty	Idaho Public Works License No.	$ Amount
a. Lucky Acres Fencing	Fencing	PWC-C-17554	24,793.48
b. Inland Traffic Control	Traffic Control	040406-C	13,000.00
c. Knox Concrete	Concrete	PWC-C-16917	229,164.00
d. ~~Poe Asphalt~~ Herco, Inc.	Asphalt	PWC-C-~~12496~~ 10067	~~111,700.00~~ 91,600.00
e. Shannon Industrial	Electrical	PWC-C-17037	1,600 —

12. The undersigned proposes to furnish labor, materials, equipment, and services of all kinds required for LILLY STREET RECONSTRUCTION 'A' ST. TO THIRD ST. - REBID as described in the specifications, including all appurtenant work, all as required by the specifications and this proposal for the prices in accordance with the completed schedule contract prices as follows:

BASE BID

Bid Item No.	Description	Pay Unit	Est. Qty.	Unit Price	Total Value of Item ($)
201.4.1.B.1	CLEARING AND GRUBBING	LS	1	$1,147	$ 1,147 –
201.4.1.C.1	REMOVAL OF OBSTRUCTIONS	LS	1	$ 261 –	$ 261 –
201.4.1.D.1	REMOVAL OF BITUMINOUS SURF	SY	3,390	$ 3 –	$ 10,170 –
201.4.1.D.2	REMOVAL OF CONC SIDEWALK	SY	860	$ 12 –	$ 10,320 –
201.4.1.D.3	REMOVAL OF DRIVEWAY	SY	94	$ 20 –	$ 1,880 –
201.4.1.E.1	REMOVAL OF CURB	LF	1,530	$ 5 –	$ 7,650 –
201.4.1.F.1	REMOVAL OF HYDRANT	EA	1	$ 912 –	$ 912 –
201.4.1.F.2	REMOVAL OF EXISTING SIGNS	EA	3	$ 116 –	$ 348 –
201.4.1.F.3	REMOVAL OF CATCH BASIN	EA	6	$ 356 –	$ 2,136 –
201.4.1.F.4	REMOVAL OF WATER VAULT	EA	1	$ 866 –	$ 866 –
201.4.1.F.5	REMOVAL OF BOX CULVERT	EA	1	$ 8,592	$ 8,592 –
201.4.1.F.6	REMOVAL AND REINSTALLATION OF BOLLARDS	EA	2	$ 868	$ 1,736 –
202.4.1.A.1	EXCAVATION	CY	600	$ 26 –	$ 15,600 –
202.4.9.A.1	LANDSCAPE BOULDER	EA	5	$ 131 –	$ 655 –
401.4.1.A.1	WATER MAIN PIPE, 8" C900 DR18	LF	525	$ 187 –	$ 98,175 –
402.4.1.A.1	MANUAL AIR RELEASE STATION	EA	2	$ 3,455 –	$ 6,910 –
403.4.1.A.1	HYDRANT	EA	2	$ 9,980 –	$ 19,960 –
404.4.1.A.1	WATER SERVICE CONNECTION, 1"	EA	20	$ 5,275 –	$ 105,500 –
405.4.1.A.1	POTABLE WATERLINE CASING - 2", TYPE SCHEDULE 80	LF	170	$ 12	$ 2,040 –
405.4.1.A.2	POTABLE WATERLINE CASING - 8", TYPE C900 DR25	LF	120	$ 62	$ 7,440 –
405.4.1.A.3	POTABLE WATERLINE CASING - 16", TYPE C900 DR25	LF	60	$ 235 –	$ 14,100 –
405.4.1.A.4	POTABLE WATERLINE CASING - 16", TYPE STEEL	LF	20	$ 299 –	$ 5,980 –
501.4.1.B.1	GRAVITY SEWER PIPE SIZE - 8" TYPE ASTM D3034	LF	790	$ 120 –	$ 94,800 –
502.4.1.A.1	SANITARY SEWER MANHOLE - 48" STANDARD	EA	5	$ 5,246 –	$ 26,230 –
502.4.1.A.2	SANITARY SEWER MANHOLE - DOGHOUSE	EA	2	$ 8,758 –	$ 17,516 –
504.4.1.B.1	SEWER SERVICE LINE - 4"	EA	14	$ 2,526 –	$ 35,364 –
507.4.1.H.1	REMOVE MANHOLE	EA	6	$ 2,334 –	$ 14,004 –
601.4.1.A.5	10" STORM PIPE PVC ASTM D3034	LF	15	$ 171 –	$ 2,565 –
601.4.1.B.5	12" STORM PIPE PVC ASTM D3034	LF	148	$ 93 –	$ 13,764 –
601.4.1.A.15	54" CULVERT CORRUGATED ALUMINIZED STEEL	LF	220	$ 299 –	$ 65,780 –
601.4.1.B.5	12" C900 STORM PIPE	LF	80	$ 157 –	$ 12,560 –
602.4.1.F.1	CATCH BASIN	EA	8	$ 2,399 –	$ 19,192 –
704.4.1.B.1	BOX CULVERT	LF	66	$ 2,131 –	$ 140,646 –
704.4.1.D.1	CONCRETE BOX CULVERT ELBOW	EA	1	$ 63,787 –	$ 63,787 –
704.4.1.D.2	PRECAST CONCRETE HEADWALL	EA	1	$ 16,477 –	$ 16,477 –
705.4.1.A.1	PORTLAND CEMENT CONCRETE PAVEMENT, CLASS 4000A	SY	64	$ 294 –	$ 18,816 –
706.4.1.A.3	VERTICAL CURB - TYPE A	LF	283	$ 46	$ 13,018 –

Bid Item No.	Description	Pay Unit	Est. Qty.	Unit Price	Total Value of Item ($)
706.4.1.A.5	CURB & GUTTER - TYPE B	LF	1,668	$ 34-	$ 56,712-
706.4.1.A.11	ROLLED CURB - TYPE C	LF	198	$ 47-	$ 9,306-
706.4.1.E.1	CONCRETE SIDEWALK, 5"	SY	1,100	$ 103-	$ 113,300-
706.4.1.E.2	CONCRETE SIDEWALK, 6"	SY	110	$ 158-	$ 17,380-
706.4.1.F.1	CONCRETE DRIVEWAY APPROACH	SY	270	$ 124-	$ 33,480-
706.4.1.H.1	PEDESTRIAN RAMP w/ DETECTABLE WARNING DOMES	SY	84	$ 261-	$ 21,924-
801.4.1.B.1	1" MINUS UNCRUSHED AGGREGATE	TON	32	$ 42-	$ 1,344-
802.4.1.B.1	CRUSHED AGGREGATE FOR BASE TYPE I	TON	1,730	$ 38-	$ 65,740-
802.4.1.B.2	CRUSHED AGGREGATE FOR BASE, 1-1/4"(-)	TON	670	$ 33	$ 22,110-
810.4.1.A.5	SUPERPAVE HMA, CLASS SP-3, 1/2" AGG	TON	660	$ 172-	$ 113,520-
901.4.1.C.1	PRESSURE IRRIGATION SYSTEM MODIFICATIONS	CA	15,000	$1.00	$15,000
1001.4.2.B.1	STABILIZED CONSTRUCTION ENTRANCE	EA	1	$2,035-	$ 2,035-
1005.4.1.I.1	FIBER WATTLE	LF	100	$ 12	$ 1,200-
1006.4.1.C.1	INLET PROTECTION	EA	28	$ 86-	$ 2408-
1007.4.1.A.1	TOPSOIL	CY	40	$ 83	$ 3,320-
1007.4.1.B.1	SEEDING	SF	6,425	$ .30	$ 1,927.50
1007.4.1.C.1	SODDING	SY	100	$ 46-	$ 4,600-
1102.4.1.I.1	LIGHTED BOLLARDS	EA	6	$3,840-	$ 23,040-
1103.4.1.A.1	CONSTRUCTION TRAFFIC CONTROL	LS	1	$17,679	$ 17,679-
2010.4.1.A.1	MOBILIZATION	LS	1	$181,000	$ 181,000
2050.4.1.C.1	SUBGRADE SEPARATION GEOTEXTILE	SY	3,210	$ 3-	$ 9,630-
SP 1.4.1.A.1	CONSTRUCTION SURVEY	LS	1	$31,015	$ 31,015-
SP 6.4.1.A.1	SWPPP MANAGEMENT	LS	1	$2,337	$ 2,337-
SP 7.4.1.A.1	ORNAMENTAL FENCE	LF	364	$ 87	$ 31,668-
ALTA SP-1	CHANNEL	LF	290	$ 103-	$ 29,870-
ALTA SP-2	CONCRETE BLOCK RETAINING WALL	SFF	2,356	$ 52-	$ 122,512-
ALTA SP-3	REVEGETATION PLANTING	SF	4,400	$ 3-	$ 13,200-
ALTA SP-4	REVEGETATION SEEDING AND MULCHING	SF	4,390	$ .70	$ 3,073-
ALTA SP-5	WATER MANAGEMENT	LS	1	$28,759	$ 28,759-
ALTA SP-6	PROVIDE WATER	DAYS	60	$ ~~275~~ 257-	$ 15,420
				Total Base Bid	$ 1,871,406.50

Total (written in words): one Million eight hundred Seventy one thousand four hundred and Six dollars & fifty cents

ADD ALTERNATE 1: FIRST STREET

Bid Item No.	Description	Pay Unit	Est. Qty.	Unit Price	Total Value of Item ($)
201.4.1.D.2	REMOVAL OF CONC SIDEWALK	SY	106	$ 14-	$ 1,484-
202.4.1.A.1	EXCAVATION	CY	470	$ 31-	$ 14,570-
401.4.1.A.1	WATER MAIN PIPE, 8" C900 DR18	LF	285	$ 96-	$ 27,360-
403.4.1.A.1	HYDRANT	EA	1	$ 10,821-	$ 10,821-
404.4.1.A.1	WATER SERVICE CONNECTION, 1"	EA	3	$ 5,540-	$ 16,620-
405.4.1.A.3	POTABLE WATERLINE CASING - 16", TYPE C900 DR25	LF	20	$ 203-	$ 4,060-
706.4.1.A.5	CURB & GUTTER - TYPE B	LF	269	$ 33	$ 8,877-
706.4.1.E.1	CONCRETE SIDEWALK, 5"	SY	150	$ 66-	$ 9,900-
802.4.1.B.1	CRUSHED AGGREGATE FOR BASE TYPE I	TON	242	$ 55-	$ 13,310-
802.4.1.B.2	CRUSHED AGGREGATE FOR BASE, 1-1/4"(-)	TON	157	$ 40-	$ 6,280-
810.4.1.A.5	SUPERPAVE HMA, CLASS SP-3, 1/2" AGG	TON	157	$ 187-	$ 29,359-
1006.4.1.C.1	INLET PROTECTION	EA	1	$ 86-	$ 86-
2010.4.1.A.1	MOBILIZATION	LS	1	$ 19,450-	$ 19,450
2050.4.1.C.1	SUBGRADE SEPARATION GEOTEXTILE	SY	756	$ 3-	$ 2,268-
SP 1.4.1.A.1	CONSTRUCTION SURVEY	LS	1	$ 6,203	$ 6,203-
SP 4.4.1.A.1	RETAINING WALL - SMALL	SF	46	$ 37-	$ 1,702-
SP 4.4.1.A.2	REMOVE AND RESET RETAINING WALL	SF	51	$ 37-	$ 1,887-
				Total Add Alternate 1	$ 174,237-

Total (written in words): one hundred Seventy four thousand. two hundred thirty Seven dollars & NO cents

Total
2,045,643.50
Base + Alt.

Big Sky ID Corp
Firm Name of Bidder

Signature of Bidder

President
Official Title

10063 Navion Drive, Hayden, ID 83835
Bidders Mailing Address

002207-U
Public Works License No.

Idaho
State of Incorporation if Incorporated

SEAL (if incorporated)

Dated at Hayden, ID

This 23rd day of January, 2023

BID BOND (PENAL SUM FORM)

Bidder	**Surety**
Name: Big Sky ID, Corp. Address *(principal place of business)*: 10063 N Navion Drive Hayden, ID 83835	Name: SWISS RE CORPORATE SOLUTIONS AMERICA INSURANCE CORPORATION Address *(principal place of business)*: 835 N. Post Street, Suite 203 Spokane, WA 99201
Owner Name: City of Moscow Address *(principal place of business)*:	**Bid** Project *(name and location)*: Lilly Street Reconstruction 'A' St. to Third St. - Rebid Bid Due Date: January 10, 2023

Bond

Penal Sum: --Five Percent of the Amount Bid (5%)--

Date of Bond: January 10, 2023

Surety and Bidder, intending to be legally bound hereby, subject to the terms set forth in this Bid Bond, do each cause this Bid Bond to be duly executed by an authorized officer, agent, or representative.

Bidder	Surety
Big Sky ID, Corp. *(Full formal name of Bidder)*	SWISS RE CORPORATE SOLUTIONS AMERICA INSURANCE CORPORATION *(Full formal name of Surety) (corporate seal)*
By: *(Signature)*	By: *(Signature) (Attach Power of Attorney)*
Name: JEREMY TRIPP *(Printed or typed)*	Name: Travis Long *(Printed or typed)*
Title: President	Title: Attorney-in-Fact
Attest: Jacki Fullerton *(Signature)*	Attest: *(Signature)*
Name: Jacki Fullerton *(Printed or typed)*	Name: Shelby L Foo *(Printed or typed)*
Title: Const. Mgr	Title: Witness

Notes: (1) Note: Addresses are to be used for giving any required notice. (2) Provide execution by any additional parties, such as joint venturers, if necessary.

EJCDC® C-430, Bid Bond (Penal Sum Form).
Copyright© 2018 National Society of Professional Engineers, American Council of Engineering Companies, and American Society of Civil Engineers. All rights reserved.

1. Bidder and Surety, jointly and severally, bind themselves, their heirs, executors, administrators, successors, and assigns to pay to Owner upon default of Bidder the penal sum set forth on the face of this Bond. Payment of the penal sum is the extent of Bidder's and Surety's liability. Recovery of such penal sum under the terms of this Bond will be Owner's sole and exclusive remedy upon default of Bidder.

2. Default of Bidder occurs upon the failure of Bidder to deliver within the time required by the Bidding Documents (or any extension thereof agreed to in writing by Owner) the executed Agreement required by the Bidding Documents and any performance and payment bonds required by the Bidding Documents.

3. This obligation will be null and void if:

   3.1. Owner accepts Bidder's Bid and Bidder delivers within the time required by the Bidding Documents (or any extension thereof agreed to in writing by Owner) the executed Agreement required by the Bidding Documents and any performance and payment bonds required by the Bidding Documents, or

   3.2. All Bids are rejected by Owner, or

   3.3. Owner fails to issue a Notice of Award to Bidder within the time specified in the Bidding Documents (or any extension thereof agreed to in writing by Bidder and, if applicable, consented to by Surety when required by Paragraph 5 hereof).

4. Payment under this Bond will be due and payable upon default of Bidder and within 30 calendar days after receipt by Bidder and Surety of written notice of default from Owner, which notice will be given with reasonable promptness, identifying this Bond and the Project and including a statement of the amount due.

5. Surety waives notice of any and all defenses based on or arising out of any time extension to issue Notice of Award agreed to in writing by Owner and Bidder, provided that the total time for issuing Notice of Award including extensions does not in the aggregate exceed 120 days from the Bid due date without Surety's written consent.

6. No suit or action will be commenced under this Bond prior to 30 calendar days after the notice of default required in Paragraph 4 above is received by Bidder and Surety, and in no case later than one year after the Bid due date.

7. Any suit or action under this Bond will be commenced only in a court of competent jurisdiction located in the state in which the Project is located.

8. Notices required hereunder must be in writing and sent to Bidder and Surety at their respective addresses shown on the face of this Bond. Such notices may be sent by personal delivery, commercial courier, or by United States Postal Service registered or certified mail, return receipt requested, postage pre-paid, and will be deemed to be effective upon receipt by the party concerned.

9. Surety shall cause to be attached to this Bond a current and effective Power of Attorney evidencing the authority of the officer, agent, or representative who executed this Bond on behalf of Surety to execute, seal, and deliver such Bond and bind the Surety thereby.

10. This Bond is intended to conform to all applicable statutory requirements. Any applicable requirement of any applicable statute that has been omitted from this Bond will be deemed to be included herein as if set forth at length. If any provision of this Bond conflicts with any applicable statute, then the provision of said statute governs and the remainder of this Bond that is not in conflict therewith continues in full force and effect.

11. The term "Bid" as used herein includes a Bid, offer, or proposal as applicable.

Copyright© 2018 National Society of Professional Engineers, American Council of Engineering Companies, and American Society of Civil Engineers. All rights reserved.

SWISS RE CORPORATE SOLUTIONS

SWISS RE CORPORATE SOLUTIONS AMERICA INSURANCE CORPORATION ("SRCSAIC")
SWISS RE CORPORATE SOLUTIONS PREMIER INSURANCE CORPORATION ("SRCSPIC")
WESTPORT INSURANCE CORPORATION ("WIC")

GENERAL POWER OF ATTORNEY

KNOW ALL MEN BY THESE PRESENTS, THAT SRCSAIC, a corporation duly organized and existing under laws of the State of Missouri, and having its principal office in the City of Kansas City, Missouri, and SRCSPIC, a corporation organized and existing under the laws of the State of Missouri and having its principal office in the City of Kansas City, Missouri, and WIC, organized under the laws of the State of Missouri, and having its principal office in the City of Kansas City, Missouri, each does hereby make, constitute and appoint:

H. KEITH McNALLY, ERIN L. REPP, WM DINNEEN, CHRIS LARSON, DIANA R. WILLIAMS,
RYAN J. PUGH, SHELBY L. FOO, DANIEL J. STOWE, TRAVIS LONG, and KIRSTEN K. JORDAN

JOINTLY OR SEVERALLY

Its true and lawful Attorney(s)-in-Fact, to make, execute, seal and deliver, for and on its behalf and as its act and deed, bonds or other writings obligatory in the nature of a bond on behalf of each of said Companies, as surety, on contracts of suretyship as are or may be required or permitted by law, regulation, contract or otherwise, provided that no bond or undertaking or contract or suretyship executed under this authority shall exceed the amount of:

FIFTY MILLION ($50,000,000.00) DOLLARS

This Power of Attorney is granted and is signed by facsimile under and by the authority of the following Resolutions adopted by the Boards of Directors of both SRCSAIC and SRCSPIC at meetings duly called and held on the 18th of November 2021 and WIC by written consent of its Executive Committee dated July 18, 2011.

"RESOLVED, that any two of the President, any Managing Director, any Senior Vice President, any Vice President, the Secretary or any Assistant Secretary be, and each or any of them hereby is, authorized to execute a Power of Attorney qualifying the attorney named in the given Power of Attorney to execute on behalf of the Corporation bonds, undertakings and all contracts of surety, and that each or any of them hereby is authorized to attest to the execution of any such Power of Attorney and to attach therein the seal of the Corporation; and it is

FURTHER RESOLVED, that the signature of such officers and the seal of the Corporation may be affixed to any such Power of Attorney or to any certificate relating thereto by facsimile, and any such Power of Attorney or certificate bearing such facsimile signatures or facsimile seal shall be binding upon the Corporation when so affixed and in the future with regard to any bond, undertaking or contract of surety to which it is attached."

SWISS RE CORPORATE SOLUTIONS AMERICA INSURANCE CORPORATION CORPORATE SEAL 1973 MISSOURI

SWISS RE CORPORATE SOLUTIONS PREMIER INSURANCE CORPORATION CORPORATE SEAL MISSOURI

By_____
Erik Janssens, Senior Vice President of SRCSAIC & Senior Vice President of SRCSPIC & Senior Vice President of WIC

By_____
Gerald Jagrowski, Vice President of SRCSAIC & Vice President of SRCSPIC & Vice President of WIC

WESTPORT INSURANCE CORPORATION CORPORATE SEAL MISSOURI

IN WITNESS WHEREOF, SRCSAIC, SRCSPIC, and WIC have caused their official seals to be hereunto affixed, and these presents to be signed by their authorized officers

this 10 day of NOVEMBER, 20 22

Swiss Re Corporate Solutions America Insurance Corporation
Swiss Re Corporate Solutions Premier Insurance Corporation
Westport Insurance Corporation

State of Illinois
County of Cook SS

On this 10 day of NOVEMBER, 20 22, before me, a Notary Public personally appeared Erik Janssens, Senior Vice President of SRCSAIC and Senior Vice President of SRCSPIC and Senior Vice President of WIC and Gerald Jagrowski, Vice President of SRCSAIC and Vice President of SPCSPIC and Vice President of WIC, personally known to me, who being by me duly sworn, acknowledged that they signed the above Power of Attorney as officers of and acknowledged said instrument to be the voluntary act and deed of their respective companies.

OFFICIAL SEAL
CHRISTINA MANISCO
NOTARY PUBLIC, STATE OF ILLINOIS
My Commission Expires March 28, 2026

Christina Manisco, Notary

I, Jeffrey Goldberg, the duly elected Senior Vice President and Assistant Secretary of SRCSAIC and SRCSPIC and WIC, do hereby certify that the above and foregoing is a true and correct copy of a Power of Attorney given by said SRCSAIC and SRCSPIC and WIC, which is still in full force and effect.
IN WITNESS WHEREOF, I have set my hand and affixed the seals of the Companies this 10th day of January, 20 23.

Jeffrey Goldberg, Senior Vice President & Assistant Secretary of SRCSAIC and SRCSPIC and WIC

Bidder Qualification Statement

10063 N. Navion Drive

Hayden, ID 83835

Phone (208) 772-9646

Fax (208) 762-6376

Email: jeremy@bigskyidaho.com

eric@bigskyidaho.com

jacki@bigskyidaho.com

BIG SKY CORPORATION

Summary

Big Sky ID Corp was established in 2003 and became an Idaho corporation in 2005. We focus primarily on civil construction, water and sewer main installation, dry utilities, lift stations, complex sewer systems,, water-treatment facilities, storm water, site construction, remediation work, retaining walls, road construction and electrical underground projects. Our field crews are Hazwoper, ICP, and OSHA trained, and we have CESCL certified erosion control inspectors. Health and safety is a priority at Big Sky ID Corp.

Company Information

- Company Address: 10063 N. Navion Dr, Hayden, ID 83835
- Years in Business: 16
- Number of Employees - 25
- TIN #: 20-3576395
- Idaho Contractors #: RCE-15163
- Washington Contractors #: BIGSKSI822NF
- DUNS #: 081031757
- Idaho Public Works #: 0002207-U
- PHD Installer #: 15-103989
- Bond #: 2155278, Agent—HUB Intnl
- Type of Business: S-Corporation (Idaho)
- Principals: Jeremy Tripp
- Website: www.bigskyidaho.com

Trade References

- CDA Paving, 120 Anton Ave., Coeur d'Alene, ID 83815, (208) 762-0235
- Consolidated Supply Co., P.O. Box 5788, Portland, OR 97288, (800) 929-5810
- Coleman Oil, P.O. Box 1308, Lewiston, ID 83501, (888) 799-2000
- Wilbert Precast, 2215 E. Brooklyn Ave, Spokane, WA 99217, (509) 325-4573

Key Personnel

Jeremy Tripp, President, Jeremy@bigskyidaho.com
Steve Thurston, General Manager, steve@bigskyidaho.com
Eric Hensyel, Estimator/Project Manager, eric@bigskyidaho.com
Jacki Fullerton, Construction Manager, jacki@bigskyidaho.com

Jeremy Tripp, President

BIG SKY CORPORATION

BSC CORP.

ACKNOWLEDGMENT

STATE OF IDAHO)
: ss.
County of Kootenai)

On the 23rd day of January, 2023 before me, the undersigned Notary Public, personally appeared Jeremy Tripp, known to me to be the person whose name is subscribed to the foregoing instrument, and acknowledged to me that s/he executed the same.

IN WITNESS WHEREOF, I have set my hand and seal the day and year as above written.

JACKI FULLERTON
NOTARY PUBLIC - STATE OF IDAHO
COMMISSION NUMBER 65275
MY COMMISSION EXPIRES 3-23-2027

Notary Public for Idaho

Residing at 7908 N Hibiscus Ln, CDA ID 83815

Commission Expires: 3/23/2027

BIG SKY CORPORATION

Idaho License Information

Public Works Search Search Again Download Results Printable View

Company Name	License Number	Work Category(s)	License Type	License Class	Status	Applicant Name
Big Sky ID, Corp.	002207	00001	1	UNLIMITED	ACTIVE	Big Sky ID, Corp.

Washington License Information

BIG SKY ID CORP

Owner or tradesperson TRIPP, JERMIAH (JEREMY) JUSTIN
10063 NAVION DR
HAYDEN, ID 83835
208-772-9646

Principals
TRIPP, JERMIAH (JEREMY) JUSTIN, PRESIDENT

Doing business as
BIG SKY ID CORP

WA UBI No.
602 933 043

Business type
Corporation

License

Verify the contractor's active registration / license / certification (depending on trade) and any past violations. Questions about licenses?

Construction Contractor

Active
Meets current requirements.

License specialties
GENERAL What can they do?

License no.
BIGSKSI822NF

Effective — expiration
03/06/2018— 03/05/2022

Past and related licenses

Report this contractor

Bond

North American Spec Ins Co
$12,000.00

Bond account no.
2107499

Received by L&I
08/03/2018

Effective date
12/01/2017

Expiration date
Until Canceled

Insurance

Western National Assur Co
$1,000,000.00

Policy no.
CFP121697602

Received by L&I
07/07/2021

Effective date
07/01/2021

Expiration date
07/01/2022

WESTERN NATIONAL MUTUAL INS CO
$2,000,000.00

Policy no.
CFP121697602

Received by L&I
07/07/2021

Effective date
07/01/2021

Expiration date
07/01/2022

Insurance history

Savings
No savings accounts during the previous 6 year period.

Lawsuits against the bond or savings
No lawsuits against the bond or savings accounts during the previous 6 year period.

L&I Tax debts
No L&I tax debts are recorded for this contractor license during the previous 6 year period, but some debts may be recorded by other agencies.

BIGSKYC-43 TROSS

ACORD

CERTIFICATE OF LIABILITY INSURANCE

DATE (MM/DD/YYYY) 7/1/2022

THIS CERTIFICATE IS ISSUED AS A MATTER OF INFORMATION ONLY AND CONFERS NO RIGHTS UPON THE CERTIFICATE HOLDER. THIS CERTIFICATE DOES NOT AFFIRMATIVELY OR NEGATIVELY AMEND, EXTEND OR ALTER THE COVERAGE AFFORDED BY THE POLICIES BELOW. THIS CERTIFICATE OF INSURANCE DOES NOT CONSTITUTE A CONTRACT BETWEEN THE ISSUING INSURER(S), AUTHORIZED REPRESENTATIVE OR PRODUCER, AND THE CERTIFICATE HOLDER.

IMPORTANT: If the certificate holder is an ADDITIONAL INSURED, the policy(ies) must have ADDITIONAL INSURED provisions or be endorsed. If SUBROGATION IS WAIVED, subject to the terms and conditions of the policy, certain policies may require an endorsement. A statement on this certificate does not confer rights to the certificate holder in lieu of such endorsement(s).

PRODUCER
Missoula Office
PayneWest Insurance, Inc.
P.O. Box 4386
Missoula, MT 59808

CONTACT NAME: Traci Ross
PHONE (A/C, No, Ext):
FAX (A/C, No):
E-MAIL ADDRESS: tross@paynewest.com

INSURER(S) AFFORDING COVERAGE	NAIC #
INSURER A: Western National Assurance Company	24465
INSURER B: Western National Mutual Insurance Co	15377
INSURER C: Mt. Hawley Insurance Company	37974
INSURER D: American Zurich Insurance Company	40142
INSURER E:	
INSURER F:	

INSURED
Big Sky ID Corp
10063 Navion Dr
Hayden, ID 83835

COVERAGES CERTIFICATE NUMBER: REVISION NUMBER:

THIS IS TO CERTIFY THAT THE POLICIES OF INSURANCE LISTED BELOW HAVE BEEN ISSUED TO THE INSURED NAMED ABOVE FOR THE POLICY PERIOD INDICATED. NOTWITHSTANDING ANY REQUIREMENT, TERM OR CONDITION OF ANY CONTRACT OR OTHER DOCUMENT WITH RESPECT TO WHICH THIS CERTIFICATE MAY BE ISSUED OR MAY PERTAIN, THE INSURANCE AFFORDED BY THE POLICIES DESCRIBED HEREIN IS SUBJECT TO ALL THE TERMS, EXCLUSIONS AND CONDITIONS OF SUCH POLICIES. LIMITS SHOWN MAY HAVE BEEN REDUCED BY PAID CLAIMS.

INSR LTR	TYPE OF INSURANCE	ADDL INSD	SUBR WVD	POLICY NUMBER	POLICY EFF (MM/DD/YYYY)	POLICY EXP (MM/DD/YYYY)	LIMITS	
A	X COMMERCIAL GENERAL LIABILITY CLAIMS-MADE X OCCUR GEN'L AGGREGATE LIMIT APPLIES PER: X POLICY PRO-JECT LOC OTHER:			CPP121697600	7/1/2022	7/1/2023	EACH OCCURRENCE DAMAGE TO RENTED PREMISES (Ea occurrence) MED EXP (Any one person) PERSONAL & ADV INJURY GENERAL AGGREGATE PRODUCTS - COMP/OP AGG	$ 1,000,000 $ 300,000 $ 10,000 $ 1,000,000 $ 2,000,000 $ 2,000,000 $
B	AUTOMOBILE LIABILITY X ANY AUTO OWNED AUTOS ONLY HIRED AUTOS ONLY SCHEDULED AUTOS NON-OWNED AUTOS ONLY			CPP121696000	7/1/2022	7/1/2023	COMBINED SINGLE LIMIT (Ea accident) BODILY INJURY (Per person) BODILY INJURY (Per accident) PROPERTY DAMAGE (Per accident)	$ 1,000,000 $ $ $ $
A	X UMBRELLA LIAB X OCCUR EXCESS LIAB CLAIMS-MADE DED RETENTION $ 0			UMB103665000	7/1/2022	7/1/2023	EACH OCCURRENCE AGGREGATE Aggregate	$ 5,000,000 $ $ 5,000,000
A	WORKERS COMPENSATION AND EMPLOYERS' LIABILITY ANY PROPRIETOR/PARTNER/EXECUTIVE OFFICER/MEMBER EXCLUDED? Y / N (Mandatory in NH) If yes, describe under DESCRIPTION OF OPERATIONS below	N / A		WCV102877400	7/1/2022	7/1/2023	X PER STATUTE OTH-ER E.L. EACH ACCIDENT E.L. DISEASE - EA EMPLOYEE E.L. DISEASE - POLICY LIMIT	$ 1,000,000 $ 1,000,000 $ 1,000,000
C	Commercial Pollution			EGL0006741	7/1/2022	7/1/2023	Aggregate	2,000,000
D	Builder's Risk			EC12387363	Per Project			2,000,000

DESCRIPTION OF OPERATIONS / LOCATIONS / VEHICLES (ACORD 101, Additional Remarks Schedule, may be attached if more space is required)

CERTIFICATE HOLDER

Informational

CANCELLATION

SHOULD ANY OF THE ABOVE DESCRIBED POLICIES BE CANCELLED BEFORE THE EXPIRATION DATE THEREOF, NOTICE WILL BE DELIVERED IN ACCORDANCE WITH THE POLICY PROVISIONS.

AUTHORIZED REPRESENTATIVE
Traci Ross

ACORD 25 (2016/03)

© 1988-2015 ACORD CORPORATION. All rights reserved.
The ACORD name and logo are registered marks of ACORD

Evidence of Authority to Sign

FILED EFFECTIVE

ARTICLES OF INCORPORATION

OF

BIG SKY DEVELOPMENT, INC.

The undersigned, acting as incorporators of a corporation under the Idaho Business Corporation Act, adopt the following Articles of Incorporation:

ARTICLE I

The name of the corporation is Big Sky Development, Inc.

ARTICLE II

The period of the corporation's duration is perpetual.

ARTICLE III

The purposes for which the corporation is organized are to transact any and all lawful business for which corporations may be incorporated under the Idaho Business Corporation Act, including but not limited to property development.

ARTICLE IV

The total authorized number of par value shares of stock is Ten Thousand (10,000). The aggregate par value of the total authorized number of par value shares is One Thousand Dollars ($1,000.00). There are no shares without par value.

ARTICLE V

The address of the initial registered office of the corporation is 212 Ironwood Drive, Suite D, #232, Coeur d'Alene, Idaho 83815. The name of its initial registered agent at such address is Jeremy Tripp.

ARTICLE VI

The number of directors constituting the initial board of directors of the corporation is one (1), and the names and addresses of the persons who are to serve as directors until the first annual meeting of shareholders or until their successors are elected and shall qualify are:

IDAHO SECRETARY OF STATE
08/29/2005 05:00
CK: 1128 CT: 26341 BH: 908863
1 @ 100.00 = 100.00 CORP # 2

ARTICLES OF INCORPORATION: 1

C 162177

Name	Address
Jeremy Tripp	212 Ironwood Dr., Suite D, #232 Coeur d'Alene, ID 83815

ARTICLE VII

The name and address of each incorporator is:

Name	Address
Jeremy Tripp	212 Ironwood Dr., Suite D, #232 Coeur d'Alene, ID 83815

DATED this 23rd day of August, 2005.

Jeremy Tripp

STATE OF IDAHO)
) ss.
County of Kootenai)

On this 23rd day of August, 2005, before me, Craig R. Wise, the undersigned Notary Public, personally appeared Jeremy Tripp, known to me or identified to me to be the person whose name is subscribed to the foregoing instrument and acknowledged to me that he executed the same.

IN WITNESS WHEREOF, I have hereunto set my hand and seal the day and year first above written.

Craig R. Wise
Notary Public
State of Idaho

Notary Public for Idaho
Residing at: Coeur d'Alene
Commission expires: 10-5-2005

ARTICLES OF INCORPORATION: 2

Projects Completed

*not a comprehensive list

Year	Description	Owner/Engineer
2022	Camp Bay Ph 3 and LSAS System	M3 Companies
2022	Panhandle Village Water System	Panhandle Village
2022	Clarkview Reservoir Interior Coating	NKWSD
2022	Hagadone Jet Port Vault Coating	Hagadone
2022	Bentley Lift Station and Valve Vault Coating	City of Post Falls
2022	Page WWTP Outfall Relocatoins	South Fork Sewer District
2022	SubAgency Housing	CDA Tribe
2022	Hayden Canyon Subdivision	SUF Holdings
2022	Ferris/Wix Road	Ferris Lane Holdings
2022	Arrow Point Tank Coating	North Kootenai Water/Sewer District
2022	HARSB Pump Station Coating	Hayden Area Regional Sewer Board
2021	Camp Bay Subdivision	M3 Companies
2021	Carlin Bay Water Treatment Plant	Carlin Bay Property Owners Assn
2021	Carlin Bay Transmission Main and Raw Water Intake	Carlin Bay Property Owners Assn
2021	Fernwood Sewer Main Rehab	Fernwood Water and Sewer District
2020	Troy Transmission Main Replacement	City of Troy
2020	Town of Rosalia Sewer and Water Improvements	Town of Rosalia
2019/20	Priest River Sewer Improvements 2018	City of Priest River
2019	Barker Road Widening	City of Spokane Valley
2019/20	Hayden Canyon Charter School	HCCS
2019/20	Watson Road Slide Repair	Worley Highway District
2019	Garland Avenue	City of Spokane Valley
2019	Fernan Lift Station	City of CDA Wastewater
2019	Black Rock Irrigation and Fire Protection Pond	Black Rock Utilities
2019	Tullamore Lift Station	City of Post Falls
2019	Third Street Leak Repair	East Shoshone County Water District
2019	Lone Mt Estates 4th and 5th Addition, Reservoir and Booster	Big Sky Capital
2018	Harrison RV Park	City of Harrison
2018	Printers Creek Remedy Protection	CDA Trust
2018	Rosebud Gulch Remedy Protection	CDA Trust
2018	Tiger Creek Remedy Protection	CDA Trust
2018	Potlatch Deltic – Dry Kiln, Basin 2-3	Potlatch Deltic
2017/18	Kellogg Ph 3 Sewer and Roadway	City of Kellogg
2017	CDA Open Trench	City of CDA
2017	Monroe Street Swales	Spokane County
2017	Potlatch St. Maries Complex Basin BMPs	Potlatch Corp.
2017	Prairie Sky Phase IV/V Subdivision	Harmony Homes, LLC
2017	Pullman Sanitary Sewer and Storm Project	City of Pullman
2016	Ph 1 Sewer and Roadway Improvements	City of Kellogg
2016	Mill Creek Remedy Protection	CDA Trust
2016	Gene Day Pond Phase 2	Idaho Department of Fish and Game
2016	Garden Grove PUD	Harmony Homes LLC
2015	CDA Trust 2015 Construction Projects (Revenue Gulch, Mill Street, South Second, and McCarthy Creek)	CDA Trust
2015	Mill Waterline Project	East Shoshone County Water District

BIG SKY CORPORATION

Owned Equipment List

EQUIPMENT	
ID #	DESCRIPTION
1-E	2016 Volvo EC300EL Excavator
2-E	2003 John Deere 550 Dozer
3-E	2008 Volvo BL70 Backhoe
4-E	2008 Cat 320DL Excavator
5-E	2017 Volvo L60H Loader
6-E	2006 Cat 315C Excavator
7-E	2015 Volvo ECR235DL Excavator
8-E	2020 Volvo EC350EL Excavator
9-E	2004 Cat 160H Road Grader
10-E	2007 Cat 320 Excavator
11-E	2006 Doosan 340 Excavator
12-E	2000 Komatsu WA250-3L Loader
13-E	2021 Yanmar SV100 Excavatpr
14-E	2012 Volvo ECR58 Compact Excavator
15-E	2018 Volvo EC350EL Excavator
16-E	2016 Volvo MCT110C Skid Steer
17-E	2016 Volvo Drum Compactor Roller
18-E	2018 Volvo L110H Loader
19-E	2007 Bomag Roller
20-E	2016 Cat D6N Dozer
21-E	2019 Hitachi ZX225 Excavator
22-E	2018 Volvo SD75B Roller
23-E	2018 Cat 302D Excavator
24-E	2019 Volvo L60H Loader
25-E	2000 Cat 615C Scraper
26-E	1997 Cat D8R Dozer
27-E	2019 Volvo ECR235EL Excavator
28-E	2021 FINN HYDROSEEDER
30-E	2022 Volvo EC350EL Crawler Excavator

TRUCKS	
ID #	DESCRIPTION
1-T	1991 Kenworth T-800
2-T	2007 Freightliner Water Truck
3-T	2000 GMC C3500 Water Truck
4-T	2018 Volvo A35G Hauler
5-T	2009 International Spraywall Truck
6-T	2006 Kenworth T800 Lowboy
7-T	2019 Volvo A30G Hauler
8-T	2006 Kenworth T800 Lowboy
9-T	2002 International Vac Truck
10-T	1997 Kenworth Dump Truck
11-T	2007 Peterbilt Water Truck
12-T	2004 Kenworth T800B Dump Truck
13-T	2001 Peterbilt 378 Dump Truck

SERVICE VEHICLES	
ID #	DESCRIPTION
1-SV	2019 Chevrolet 3500 - Steve
2-SV	2020 Dodge Ram 2500 - Randy
3-SV	2017 Ford F-350 - Dillon
4-SV	2004 GMC SRA K25 - Mark H
5-SV	2020 Dodge Ram 5500 - Mike Q
6-SV	2013 Ford F150 - Eric
7-SV	2017 GMC Sierra 3500 - Doug K
8-SV	2021 CHEVY SILVERADO - LUKASZ
9-SV	2022 Ford F550 (9271)
10-SV	2009 Dodge Ram 2500
11-SV	2017 Ford F-250 - Trent
12-SV	2016 Tungsten Chevy - Jeremy
13-SV	2014 Ford F550 (8069) - Tyler
14-SV	2014 Ford F550 (0960) - Cory
15-SV	2022 Ford F550 (9269)
16-SV	2015 GMC Sierra K2500 - Jon

Testing Equipment includes vacuum testing of manholes and pressure testing on all pipes up to 60-inches.

Trench Safety Equipment includes trench boxes up to 30 feet, manhole boxes, and safety fence up to 30 feet.

Confined Spaces safety gear includes: mask, ventilators, etc.

BIG SKY CORPORATION

Key Personnel Resumes

Jeremy Tripp, President

Jeremy has over 20 years experience in the construction industry, specifically as a civil construction superintendent for roads, water, sewer, streetlights, stop lights, and other municipal projects. Born in Montana and raised in Coeur d'Alene, Jeremy is an Inland Northwest native. After working as a civil construction superintendent for 7 years, Jeremy started Big Sky Development. Since starting Big Sky Jeremy's vision and leadership have taken the firm from constructing private subdivision utilities to the full-scale municipal construction firm it is today. Jeremy continues to push the company to explore new avenues of municipal construction, adding crew's that have specialty experience that will expand the capabilities of the firm. His vast construction knowledge and superior management experience are utilized on every project and are the driving force behind the success of Big Sky Development.

Steve Thurston, General Manager

Recent Specific Project Experience:

- ✓ Hayden Canyon Charter School
- ✓ Lone Mountain Estates 4th and 5th Addition, Reservoir, and Booster
- ✓ Watson Road Slide Repair
- ✓ Fernan Lift Station
- ✓ Tullamore Lift Station
- ✓ Black Rock Irrigation and Fire Protection Pond

Steve has over 20 years of experience in the civil construction industry. His focus is in large diameter utility construction, heavy-road construction, grading and site remediation for public works projects. As a construction project manager, he has been successful in problem solving, organization of project schedules, keeping accurate record drawings and implementing specifications of each project, site inspections, preparing reports and documentation. In addition to Steve's project management experience he is an invaluable source as our General Manager. Steve's time in the field and depth of experience helps him ensure all Big Sky projects are completed in the most successful manner possible for both the Owner and Big Sky. Steve holds certifications in Hazwoper and CPR and is very familiar with the requirements of the Institutional Controls Program used in the Bunker Hill Superfund Site.

BIG SKY CORPORATION

Key Personnel Resumes

Jacki Fullerton, Construction/Safety Manager

Jacki is a Construction Manager with 15 years experience. Her years as a project administrator for a regional civil engineering firm give her a tremendous amount of experience administering the paperwork side of a project. Jacki is extremely familiar with all funding agencies in Washington and Idaho and as part of her work at the engineering firm she has administered grants for a majority of the state and federal funding agencies in those states. She will be responsible for all project documentation and tracking to ensure compliance with project specifications and funding. Jacki is familiar with all local and state public works administrative requirements. She has a Bachelor's degree in Environmental Science and is responsible for SWPPP preparation and documentation. Jacki was responsible for writing and implementing our Safety Manual and all Site Safety Plans. Jacki is also responsible for our SprayRoq coating division.

Eric Hensyel, Project Manager/Lead Estimator

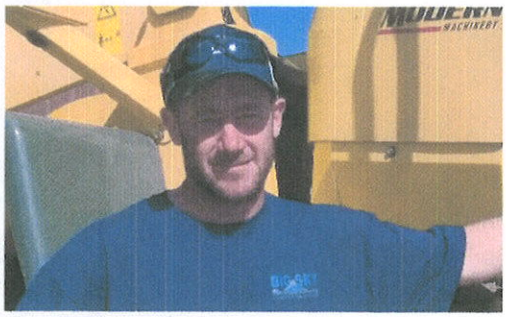

Specific Project Experience:

- ✓ Carlin Bay Water Treatment Plan
- ✓ Hayden Canyon Subdivision
- ✓ Sub Agency Housing – CDA Tribe
- ✓ Page WWTP Outfall Relocation
- ✓ Kellogg Ph 1 and Ph 3 Sewer and Road
- ✓ Barker Road Widening
- ✓ Priest River Sewer Improvements
- ✓ Rosalia Sewer Improvements
- ✓ The Union and the District Subdivisions

Eric has over 20 years of municipal construction experience. Eric is our lead project manager for Big Sky. Eric specializes in public works projects. Eric worked his way from the field to the office. Hired as an operator, quickly moved to Foreman and is now a key part of the Big Sky Management team in the office as a Project Manager. His leadership skills and easy-going personality combined with his real-world construction knowledge make him one of the best in the business! Eric's time in the field and depth of experience helps him understand the process each project will go through during construction and ensures the bids prepared are realistic and beneficial to the Project Owner and Big Sky. Prior to working for Big Sky Eric worked for ACI for many years and prior to ACI, Eric worked in the logging industry. Eric has been with Big Sky for over 10 years.

Key Personnel

Foremen
Doug Killingsworth, Trent Tamagni, Randy Wright, Mark Hogan, and Dillon Adickes

Big Sky's foremen have a combined 75 years experience in the civil construction industry. They have proven abilities and are a valuable company asset. Each superintendent was chosen for their own personal strengths in the industry to lead 1 of our crews.

Doug uses his vast pipe experience in leading our pipe crew. Their focus is on sewer and water mainline projects. His crew is highly capable in the installation of mainline small and large pipe sizes, service connections, manholes, storm pipe and storm appurtenances.

Randy is our jack of all trades. He heads our specialty crew that focuses on projects that involve both pipe and structures. He is our go to for concrete and building work. Randy's experience, can do attitude and ability to make needed changes on the fly make him an exceptional foreman.

Trent is our dirt foreman. His crew specializes in all things dirt. Large and small excavations, subgrade, finish grade, storm elements, ballast and base install. Trent's leadership experience and skills ensure his projects are both smooth as well as on-time and on-budget.

Mark Hogan has a multitude of experience in all facets of construction and is our go to on commercial building projects. His crew has many combined years of experience in pipe installation, road work, and all of the work Big Sky does best. Mark is a very organized and efficient leader.

Dillon Adickes is our other jack of all trades and was responsible for training Randy. He has many great qualities and the best of which is to see the big picture and to problem solve all the little things that can come up during a project. Dillon has a get it done attitude which is why most of his projects are completed early and with minimal change orders.

All of our Foreman are safety, OSHA, ICP and Hazwoper trained.

Reference Projects

Hayden Canyon Subdivision

Construction of civil infrastructure for this new subdivision in Hayden, Idaho. Project includes over 5000 lf of 8 – 18 inch sewer piper, 24 manholes, sewer services, over 2500 feet of storm sewer from 12-24 Inch, 24 catch basins, 18 storm manholes, 41 drywells, swale ponds, culverts, 2000 lf of 16 inch water main, services, tie-ins, 10 fire hydrants, extensive excavation including over 28,000 SY of subgrade. Contact: Thomas Tedder, SUF Holdings, 208.618.1492, Thomas.tedder@gmail.com. Contract Amount: $4.3 mil.

SubAgency Housing, Plummer, Idaho

Construction of the infrastructure for a small subdivision for the Coeur d'Alene Tribe. Work included water and sewer main and service installation, stormwater controls, a new sewage lift station, road construction, and landscaping. Engineer: CDA Tribe, Dan Willms, Project Manager, 208.686-2001, dan.willms@cdatrib-nsn.gov. Contract Amount: $2.06 mil

Carlin Bay Water Treatment Plant, Transmission Main and Raw Water Intake, Coeur d'Alene, Idaho

Construction of a new raw water intake in Lake Coeur d'Alene, new transmission main feeding the new Water Treatment Plant also being constructed by Big Sky including chlorine contact, sand filtration, and all associated interior piping, pumps, and Building. Engineer: Welch Comer Engineers, Steve Cordes, PE, Project Manager, 208.664.9382, scordes@welchcomer.com. Contract Amount: $1.8 mil

Rosalia Sewer Improvements, Town of Rosalia, WA

Construction and replacement of over 5,000 feet of gravity sanitary sewer pipe, 24 manholes, reinstating sanitary service connections, over 2,000 feet of water main, stormwater improvements including culverts, paved roadway reconstruction, utility relocations, and other related work. Owner: Town of Rosalia, Mayor Lee Root, 509.523.5991, clerk@rosaliatown.org. Contract Amount $1.7 mil.

Troy Transmission Main

Construction of approximately 11,000 lineal feet of 6-inch HDPE water main, a pressure reducing vault, valves, and connection to existing facilities. Owner: City of Troy, Idaho, Mayor Steve Corr, 208.835.2741, TroyCityHall@TroyIdaho.net. Contract Amount: $780,000.

Reference Projects

Camp Bay Subdivision, Sagle, Idaho

Construction of civil infrastructure for a new luxury subdivision on Lake Pend Oreille. Includes sewer main and services, sewer treatment system (LSAS), extensive storm water controls and SWPPP management, excavation, subgrade and roadways. Owner: m3 Companies, Alex Brownlee, 623.980.9440, alexb@m3companiesllc.com. Contract Amount: $4.5 mil

Barker Road Widening Project, Spokane Valley, WA

Construction and replacement of sanitary sewer and storm elements, road reconstruction and widening. Owner: City of Spokane Valley, Rob Lochmiller, 509.720.5010, rlochmiller@spokanevalley.org. Contract Amount 2,020,000.

Black Rock Irrigation and Fire Protection Pond

Construction of an irrigation and fire protection pond near the golf course at Black Rock. Project included large scale excavation, installation of piping and hdpe liner. Owner: Black Rock Utilities, Drew Dittman, Engineer, 208.676.0230, Dittman@lakecityengineering.com. Contract Amount $850,000.

Ph 1 and Ph 3 Sanitary Sewer and Roadway Improvements, Kellogg, ID

Construction and replacement of over 30,000 feet of gravity sanitary sewer pipe and associated manholes, reinstating sanitary service connections, paved roadway reconstruction, utility relocations, and other related work. Owner: City of Kellogg, Mayor Mac Pooler, 208.786.9131, nila.Jurkovich@Kellogg.id.gov. Contract Amount for both projects $7,000,000.

2015 -2018 CDA Trust Projects (Revenue Gulch, Mill Street, South Second, Nine Mile Side Gulches, Hunters Gulch, Printers Creek, Rosebud Gulch, and Tiger Creek), Shoshone County, ID

Install stormwater system to increase remediation efforts. Details include large diameter storm water pipe, box culverts, catch basins, manholes, stream work, minor water and sewer elements, property owner restorations, and dewatering. Owner: CDA Trust, Jim Finlay, 208.783.0222, jfinlay@cda-trust.com. Contract Amount for all projects $6,000,000.

CDA B-Interceptor, City of Coeur d'Alene, ID

Construction of approximately 400 LF of 24-inch sewer main and associated manholes through a busy CDA residential neighborhood. Also included construction of an energy-dissipating device in pre-cast vault, slide gates, demo of steel drop shaft, rehab of a 30 ft deep manhole, manhole coating, and full width surface repair. Engineer: Pete Stayton, JUB Engineers, 208.762.8787, pstayton@jub.com. Contract Amount: $508,000.

ADDENDUM NO. 1

JANUARY 03, 2023

RE: LILLY STREET RECONSTRUCTION 'A' ST. TO THIRD ST. - REBID

OWNER: CITY OF MOSCOW

FROM: Welch Comer & Associates, Inc.
330 E. Lakeside Ave., Ste. 101
Coeur d'Alene, Idaho 83814
Phone: (208) 664-9382 Fax: (208) 664-5946

TO: ALL PLAN HOLDERS

The following modifications, clarifications and information are hereby made a part of the contract provisions and shall be fully binding.

This Addendum consists of 28 pages: 4 Addendum pages and 24 attachment pages.

IMPORTANT: Bidders must acknowledge receipt of this Addendum as well as all other issued addenda on the Bid Form provided with the Contract Documents, which must be utilized by Bidder for bid to be considered responsive. Failure to do so may subject Bidder to disqualification.

SECTION 1: BIDDING INFORMATION AND DOCUMENTS

With reference to **BASE BID and ADD ALTERNATE 1: FIRST STREET Bid Schedules,** please replace with the attached revised bid schedules. Below are clarifications to some of the changes:

1. Base Bid Schedule Changes:
   - Quantities and Items have been revised to be in the correct item location.
   - Changed Potable Waterline Casing – 20", Type Steel to Potable Waterline Casing – 16", Type Steel.
   - Added Item 601.4.1.A.5 - 10" Storm Pipe PVC ASTM D3034. 10" Storm Pipe item is located on Sheet S5
2. Add Alternate Bid Schedule changes:
   - Quantities and Items have been revised to be in the correct item locations.

SECTION 3: AMENDMENTS:

With reference to **Section 202 Excavation & Embankment,** add the following:

Part 4 Measurement and Payment:

4.9.D. Landscape Boulder: By the each. Includes full compensation for all materials, labor, and equipment necessary for hauling and placing boulders in the locations shown on the plans.

1. Bid Schedule Payment References: 202.4.9.A.1.
2. Bid Schedule Description: Landscape Boulder… each (EA).

SECTION 4: SPECIAL PROVISIONS

With reference to **Section 1.04 FIELD ENGINEERING**, replace with the attached revised Section 1.04.

DRAWINGS:

Replace all "OWNER TO REPLACE EXISTING SURVEY MONUMENT" notes with "CONTRACTOR TO REPLACE EXISTING SURVEY MONUMENT"

CLARIFICATIONS:

1. For this project you have specified sleeving at these crossings, and I am wondering if the sleeving will be sufficient or if we will need to make this switch from SDR35 to water pipe in addition to the sleeving.

   Where a service lateral crosses a water main or a water service line with less than 18 inches of clearance, the contractor has the option to either case the non-potable service or main per the plans or install water-class pipe as per Section 03: Plans and Specifications, ES-20, but is not required to do both.

   As additional clarification, the casings as shown on the plans for the water services are required for water service crossing underneath the sidewalk, as per City of Moscow Standard Drawing #29.

2. The specification section says "When, in the opinion of the Engineer, the existing material in the bottom of the trench is unsuitable for support the pipe, excavate below the flow line of the pipe, as directed by the engineer…." How will this be paid? If this is incidental, is there a standard depth or will this be treated as a change order?

   The standard drawings show pipe bedding, at a minimum of 4" below the pipe, to be considered incidental and is considered part of the bid item.

3. Are all Clean-outs new?

   All proposed clean-outs are new.

4. Are all Storm Pipe to be ASTM D3034?

   All proposed Storm Pipe shall be ASTM D3034 unless otherwise specified on the plans. The City has specified a preference for PVC, however, the City would consider HDPE as an alternative.

5. Where will the water services be reconnected? If the City is providing and installing the meters, will they also be making the final change over once the meters are installed?

   The water services will be reconnected as per Page 130 of the City of Moscow Standard Amendments. The City will be making the final change over once the meter setters are installed.

6. How do you anticipate pressure testing the storm and sanitary with the existing services? Is there an alternate method that will be approved in-lieu-of pressure testing?

   We anticipate that pressure testing will involve plugging/capping ends and new services and then pressure testing following the specs before final tie-ins. The City would allow the hydrostatic exfiltration testing as shown in the specs and evaluate other proposed methods not included in the specs.

7. Would the existing road base be able to be used as trench backfill, provided a gradation is ran on it and it reasonably meets the backfill specifications?

   Trench backfill is assumed to be imported per City Standard Drawing #33b. The City would consider the existing road base to be used as backfill given that it meets backfill specifications, however, the existing road base material is anticipated to be used to achieve finished grade elevations as stated per Note #5 on Sheets C1-C6. If existing road material is used for trench backfill, then any additional import material needed to achieve finished grade elevations shall be considered incidental.

8. Permanent Signing – I don't see any callout for new signage or striping

   Striping and Signing will be performed by the City. The attached new bid schedule will reflect this change.

9. Sewer Service Cleanouts – are we installing cleanouts on every new service connection? Incidental to service connection?

   Yes, all new services shall have new cleanouts installed. Clean out locations are shown in the S sheets. These are considered incidental to the service connection item.

10. Reference to Alta plans – Are these the "CR" pages?

    Correct.

11. Page CR1 and S5 near ST 0+00: Page S5 shows a precast headwall, Page CR5 shows "Box Culvert" which is correct? What are the inlet dimensions at the 90 Degree Elbow?

    The concrete headwall shown in this location can be seen in the Concrete Box Culvert Elbow (90 Degree Elbow) detail (See Sheet DT4, Detail 2). The headwall is considered incidental to the 90 Degree Elbow pay item. The inlet opening for the headwall shall be 11'-4" width x 5'-0" height as noted in DT4, Detail 2.

    To clarify, the Precast Concrete Headwall item, as shown on Sheet DT4, Detail 3, refers to the headwall located at Sta 0+24.22 on Sheet S5.

12. Are Block wingwalls included in block retaining wall quantities or incidental to Box Culverts?

    Block wingwalls are included in the block retaining wall quantities.

13. Please identify locations of "Retaining Wall – Small" and "Remove and Reset Retaining Wall"

    "Retaining Wall – Small" is intended for removal of the existing wooden railroad tie retaining wall and construction of the concrete block retaining wall in front of the property address: 520 W 1st St.

"Remove and Reset Retaining Wall" is intended for removing and resetting the existing block retaining wall in front of the property address: 526 W 1st St.

14. Are Junction Boxes considered incidental for Lighted Bollards?

    Junction Boxes are considered incidental for Lighted Bollards, however, if deemed unnecessary, the junction boxes can be omitted, assuming that the wiring plan is in conformance to all relevant electrical code standards.

15. Will all water service reconnections have new meter setters?

    All water service reconnections shall have new meter setters.

16. Are the water meter vault callouts specifying using only one 18" meter vault riser, as indicated per the part code provided in the callout, or is it intended to use multiples and allowing different sizes to extend the water meter vault to finished grade?

    Multiples risers and varying sizes of risers for the specified vault product may be used to extend the water meter vault to finished grade. These risers are considered incidental to Pay Item.

17. On sheet S1 it states to remove the existing sewer manhole in Third Street and that a bypass pump is required. Could you provide the size of the existing sewer main?

    The size of the existing sewer main travelling East and West is 15" while the existing sewer main travelling North is 6".

18. *Is survey required for the base bid?*

    Yes, see updated Bid Schedule attached to this addendum.

19. *Where is the shared use path paid for?*

    The shared use path is paid for the Concrete Sidewalk, 5" item.

20. *Where is the rock mulch items to be bid under or are they incidental to another bid item?*

    This is shown in the EC Sheets and is paid for under the 1" Minus Uncrushed Aggregate item.

21. *Where are the 5 boulders to be bid?*

    See updated Bid Schedule attached to this addendum.

Attachments

Revised Bid Schedules
Revised Section 1.04
Pre-Bid Presentation
Pre-Bid Meeting Roster

END OF ADDENDUM 1

BASE BID

Bid Item No.	Description	Pay Unit	Est. Qty.	Unit Price	Total Value of Item ($)
201.4.1.B.1	CLEARING AND GRUBBING	LS	1	$	$
201.4.1.C.1	REMOVAL OF OBSTRUCTIONS	LS	1	$	$
201.4.1.D.1	REMOVAL OF BITUMINOUS SURF	SY	3,390	$	$
201.4.1.D.2	REMOVAL OF CONC SIDEWALK	SY	860	$	$
201.4.1.D.3	REMOVAL OF DRIVEWAY	SY	94	$	$
201.4.1.E.1	REMOVAL OF CURB	LF	1,530	$	$
201.4.1.F.1	REMOVAL OF HYDRANT	EA	1	$	$
201.4.1.F.2	REMOVAL OF EXISTING SIGNS	EA	3	$	$
201.4.1.F.3	REMOVAL OF CATCH BASIN	EA	6	$	$
201.4.1.F.4	REMOVAL OF WATER VAULT	EA	1	$	$
201.4.1.F.5	REMOVAL OF BOX CULVERT	EA	1	$	$
201.4.1.F.6	REMOVAL AND REINSTALLATION OF BOLLARDS	EA	2	$	$
202.4.1.A.1	EXCAVATION	CY	600	$	$
202.4.9.A.1	LANDSCAPE BOULDER	EA	5	$	$
401.4.1.A.1	WATER MAIN PIPE, 8" C900 DR18	LF	525	$	$
402.4.1.A.1	MANUAL AIR RELEASE STATION	EA	2	$	$
403.4.1.A.1	HYDRANT	EA	2	$	$
404.4.1.A.1	WATER SERVICE CONNECTION, 1"	EA	20	$	$
405.4.1.A.1	POTABLE WATERLINE CASING - 2", TYPE SCHEDULE 80	LF	170	$	$
405.4.1.A.2	POTABLE WATERLINE CASING - 8", TYPE C900 DR25	LF	120	$	$
405.4.1.A.3	POTABLE WATERLINE CASING - 16", TYPE C900 DR25	LF	60	$	$
405.4.1.A.4	POTABLE WATERLINE CASING - 16", TYPE STEEL	LF	20	$	$
501.4.1.B.1	GRAVITY SEWER PIPE SIZE - 8" TYPE ASTM D3034	LF	790	$	$
502.4.1.A.1	SANITARY SEWER MANHOLE - 48" STANDARD	EA	5	$	$
502.4.1.A.2	SANITARY SEWER MANHOLE - DOGHOUSE	EA	2	$	$
504.4.1.B.1	SEWER SERVICE LINE - 4"	EA	14	$	$
507.4.1.H.1	REMOVE MANHOLE	EA	6	$	$
601.4.1.A.5	10" STORM PIPE PVC ASTM D3034	LF	15	$	$
601.4.1.B.5	12" STORM PIPE PVC ASTM D3034	LF	148	$	$
601.4.1.A.15	54" CULVERT CORRUGATED ALUMINIZED STEEL	LF	220	$	$
601.4.1.B.5	12" C900 STORM PIPE	LF	80	$	$
602.4.1.F.1	CATCH BASIN	EA	8	$	$
704.4.1.B.1	BOX CULVERT	LF	66	$	$
704.4.1.D.1	CONCRETE BOX CULVERT ELBOW	EA	1	$	$
704.4.1.D.2	PRECAST CONCRETE HEADWALL	EA	1	$	$
705.4.1.A.1	PORTLAND CEMENT CONCRETE PAVEMENT, CLASS 4000A	SY	64	$	$
706.4.1.A.3	VERTICAL CURB - TYPE A	LF	283	$	$

Bid Item No.	Description	Pay Unit	Est. Qty.	Unit Price	Total Value of Item ($)
706.4.1.A.5	CURB & GUTTER - TYPE B	LF	1,668	$	$
706.4.1.A.11	ROLLED CURB - TYPE C	LF	198	$	$
706.4.1.E.1	CONCRETE SIDEWALK, 5"	SY	1,100	$	$
706.4.1.E.2	CONCRETE SIDEWALK, 6"	SY	110	$	$
706.4.1.F.1	CONCRETE DRIVEWAY APPROACH	SY	270	$	$
706.4.1.H.1	PEDESTRIAN RAMP w/ DETECTABLE WARNING DOMES	SY	84	$	$
801.4.1.B.1	1" MINUS UNCRUSHED AGGREGATE	TON	32	$	$
802.4.1.B.1	CRUSHED AGGREGATE FOR BASE TYPE I	TON	1,730	$	$
802.4.1.B.2	CRUSHED AGGREGATE FOR BASE, 1-1/4"(-)	TON	670	$	$
810.4.1.A.5	SUPERPAVE HMA, CLASS SP-3, 1/2" AGG	TON	660	$	$
901.4.1.C.1	PRESSURE IRRIGATION SYSTEM MODIFICATIONS	CA	15,000	$1.00	$15,000
1001.4.2.B.1	STABILIZED CONSTRUCTION ENTRANCE	EA	1	$	$
1005.4.1.I.1	FIBER WATTLE	LF	100	$	$
1006.4.1.C.1	INLET PROTECTION	EA	28	$	$
1007.4.1.A.1	TOPSOIL	CY	40	$	$
1007.4.1.B.1	SEEDING	SF	6,425	$	$
1007.4.1.C.1	SODDING	SY	100	$	$
1102.4.1.I.1	LIGHTED BOLLARDS	EA	6	$	$
1103.4.1.A.1	CONSTRUCTION TRAFFIC CONTROL	LS	1	$	$
2010.4.1.A.1	MOBILIZATION	LS	1	$	$
2050.4.1.C.1	SUBGRADE SEPARATION GEOTEXTILE	SY	3,210	$	$
SP 1.4.1.A.1	CONSTRUCTION SURVEY	LS	1	$	$
SP 6.4.1.A.1	SWPPP MANAGEMENT	LS	1	$	$
SP 7.4.1.A.1	ORNAMENTAL FENCE	LF	364	$	$
ALTA SP-1	CHANNEL	LF	290	$	$
ALTA SP-2	CONCRETE BLOCK RETAINING WALL	SFF	2,356	$	$
ALTA SP-3	REVEGETATION PLANTING	SF	4,400	$	$
ALTA SP-4	REVEGETATION SEEDING AND MULCHING	SF	4,390	$	$
ALTA SP-5	WATER MANAGEMENT	LS	1	$	$
ALTA SP-6	PROVIDE WATER	DAYS	60	$	$
				Total Base Bid	**$**

Total (written in words): _____

_____

ADD ALTERNATE 1: FIRST STREET

Bid Item No.	Description	Pay Unit	Est. Qty.	Unit Price	Total Value of Item ($)
201.4.1.D.2	REMOVAL OF CONC SIDEWALK	SY	106	$	$
202.4.1.A.1	EXCAVATION	CY	470	$	$
401.4.1.A.1	WATER MAIN PIPE, 8" C900 DR18	LF	285	$	$
403.4.1.A.1	HYDRANT	EA	1	$	$
404.4.1.A.1	WATER SERVICE CONNECTION, 1"	EA	3	$	$
405.4.1.A.3	POTABLE WATERLINE CASING - 16", TYPE C900 DR25	LF	20	$	$
706.4.1.A.5	CURB & GUTTER - TYPE B	LF	269	$	$
706.4.1.E.1	CONCRETE SIDEWALK, 5"	SY	150	$	$
802.4.1.B.1	CRUSHED AGGREGATE FOR BASE TYPE I	TON	242	$	$
802.4.1.B.2	CRUSHED AGGREGATE FOR BASE, 1-1/4"(-)	TON	157	$	$
810.4.1.A.5	SUPERPAVE HMA, CLASS SP-3, 1/2" AGG	TON	157	$	$
1006.4.1.C.1	INLET PROTECTION	EA	1	$	$
2010.4.1.A.1	MOBILIZATION	LS	1	$	$
2050.4.1.C.1	SUBGRADE SEPARATION GEOTEXTILE	SY	756	$	$
SP 1.4.1.A.1	CONSTRUCTION SURVEY	LS	1	$	$
SP 4.4.1.A.1	RETAINING WALL - SMALL	SF	46	$	$
SP 4.4.1.A.2	REMOVE AND RESET RETAINING WALL	SF	51	$	$
				Total Add Alternate 1	**$**

Total (written in words): _____

_____

1.04 FIELD ENGINEERING

A. The Contractor shall furnish all survey necessary for the construction of this project.

B. The Contractor shall be responsible for setting, maintaining, and resetting (as may be required) all horizontal and vertical construction staking necessary for the completion of the project. Except for the survey control data which is included in the plans, any additional calculations, surveying, and measuring required for setting and maintaining the necessary lines and grades shall be the Contractor's responsibility.

C. The Contractor shall provide the Contracting Agency copies of any, survey notes, references for monuments, calculations and staking data when requested by the Engineer.

D. The Contractor shall ensure a surveying accuracy within ±0.02 feet Vertical and ±0.04 feet Horizontal.

E. The Contracting Agency may spot-check the Contractor's surveying. These spot-checks will not change the requirements for normal checking by the Contractor.

F. The Contracting Agency will provide drawing files in 2022 AutoCad Civil3D format showing the horizontal and vertical alignments. Conversions to other versions of Civil3d are the responsibility of the contractor and will be completed at their own risk. Any conversions will be completed at the sole risk and responsibility of the contractor. The Contractor shall calculate coordinates for the alignment and develop his own staking sheets for the project.

G. A finish grade surface of the civil engineering designed data, in land xml format only, will be made available for use by the contractor. The XML file is not intended to substitute the design plans. The contractor is responsible for verifying the xml file. Use of the file will be at the Contractor's risk.

H. The Contractor shall take as-built measurements of the location of all utility piping, conduit, and wire locations; all utility structure locations; and all changes in grade, slope and elevations. The measurements shall be neatly noted on a full size set of plans, the "Record Drawings". Transmittal of an accurate and complete Record Set to the City of Moscow Engineering Manager is required prior to Contract Completion.

Lilly St. Reconstruction ‘A’ St. to Third St.
Pre-bid Presentation

December 14, 2022

Team Introductions

Team Member	Representing	Position/Responsibility
Scott Bontrager	City of Moscow	Engineering Manager
Adam Dorsey	Welch Comer Engineers	Design Engineer
Matt Gillis	Welch Comer Engineers	Design Team Project Manager

Project Overview

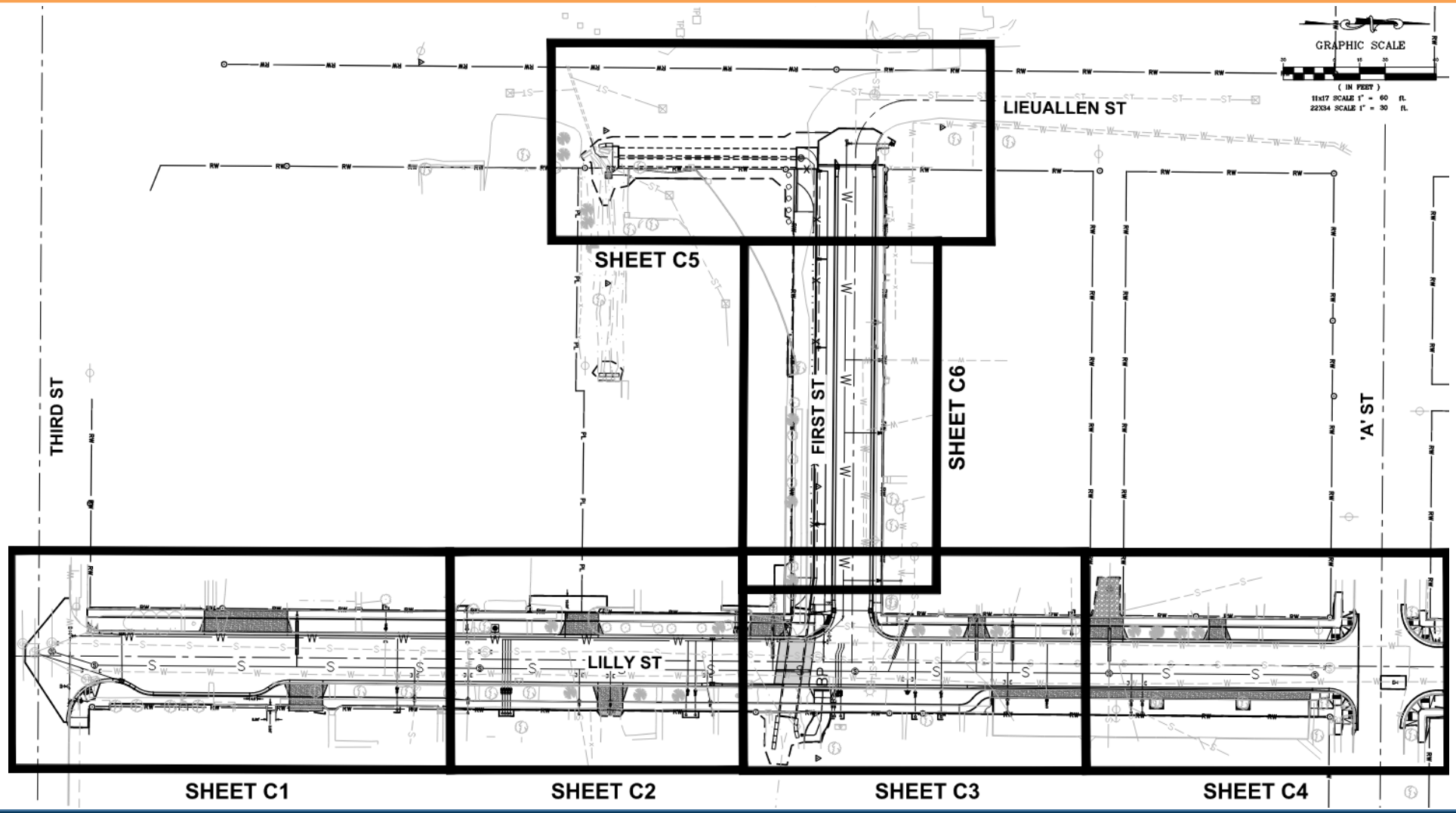

Existing Conditions

Design Elements

<u>Base Bid</u>

- Reconstruct Lilly Street
  - Roadway
  - Curb and Gutter
  - Sidewalk
- Lilly Street Utilities:
  - Gravity Sewer
  - Water Line
  - Storm Sewer
- Miscellaneous Surface Restoration

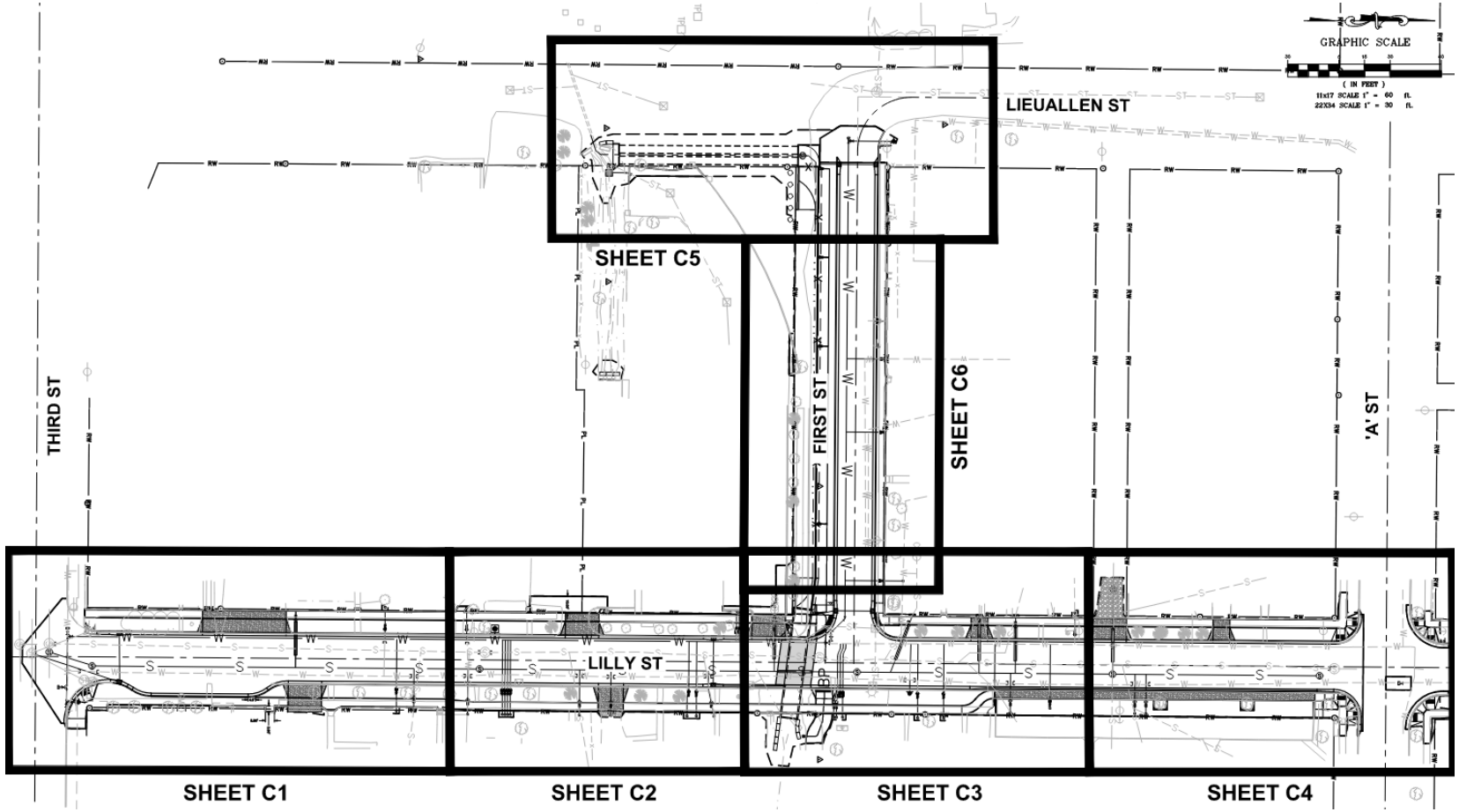

Design Elements

Base Bid

- Creek Realignment
  - Channel w/ Block Wall
  - Box Culvert
  - Concrete Headwalls
  - Concrete Elbow
  - 54” Culverts
  - Remove Existing Box Culvert
  - Abandon Remaining Culvert

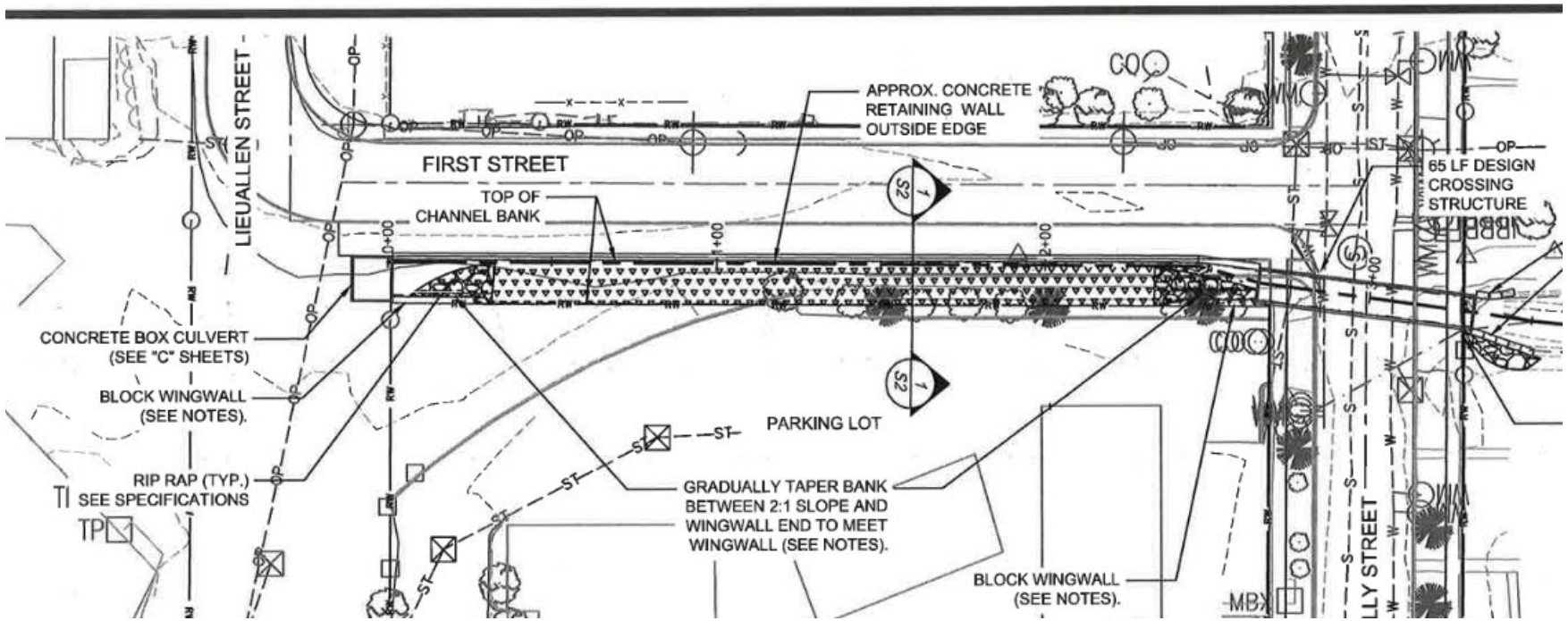

Design Elements

Add Alternate #1

- First Street Reconstruction
  - Roadway
  - Curb & Gutter
  - Sidewalk
- First Street Water Main

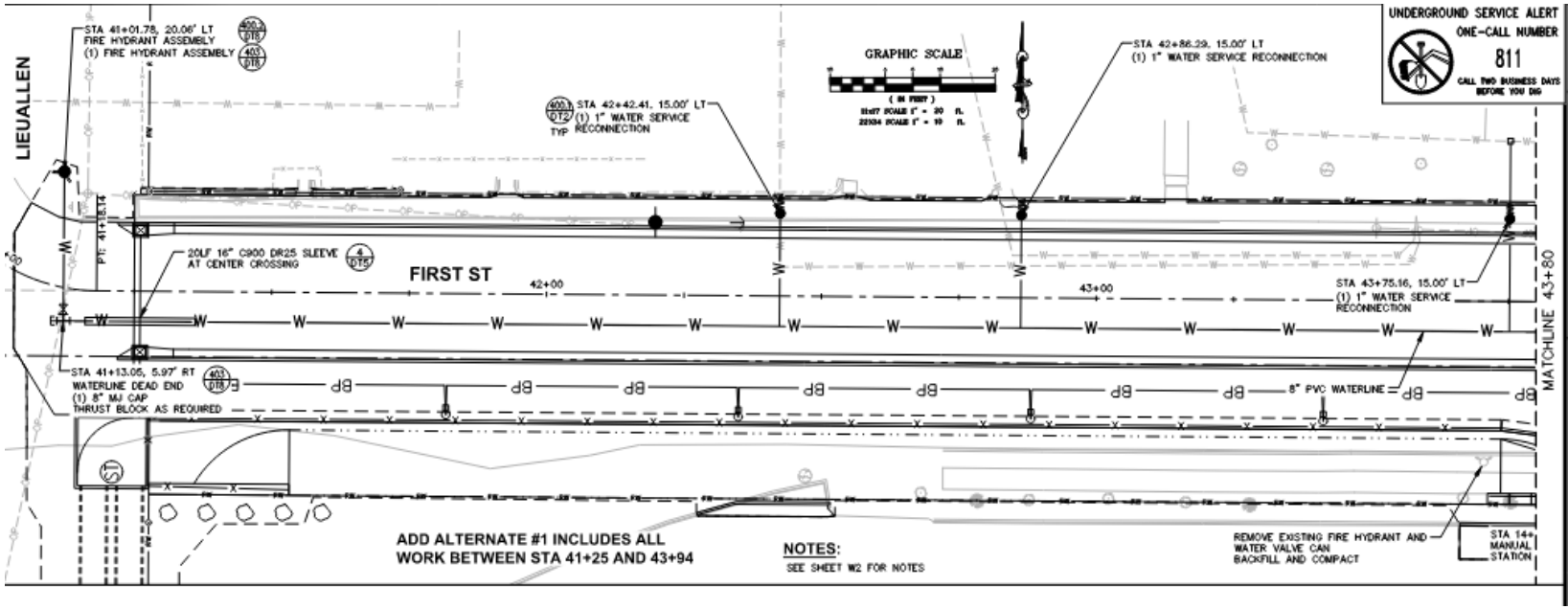

Roadway

- Retain and Protect Existing Trees
  - Field Fit Sidewalk and Buffer Zone
- Match into Private Sidewalks/Stairs

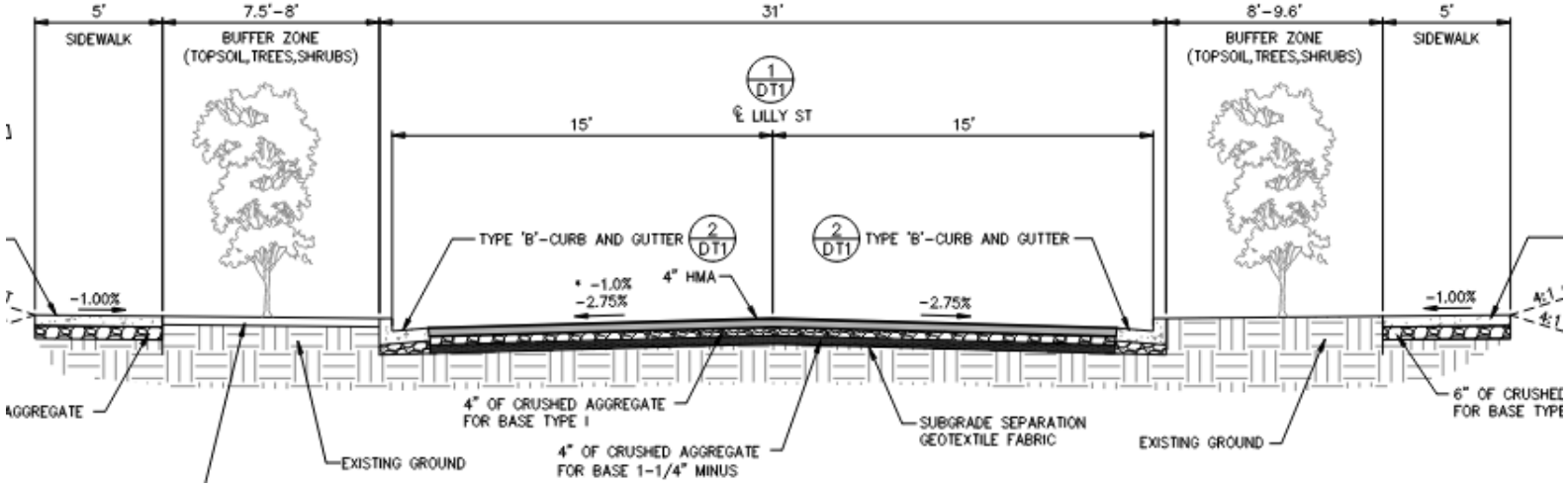

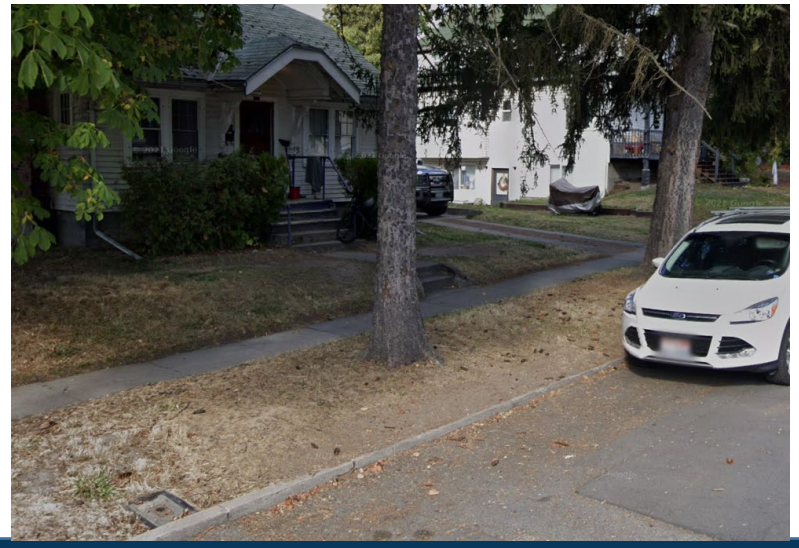

Roadway

- Apartment Parking Lots

Roadway

- First Street
  - No parking during construction
  - Retain and project existing landscaping, if possible
  - Minor block wall replacement
    - Coordinate with property owner prior

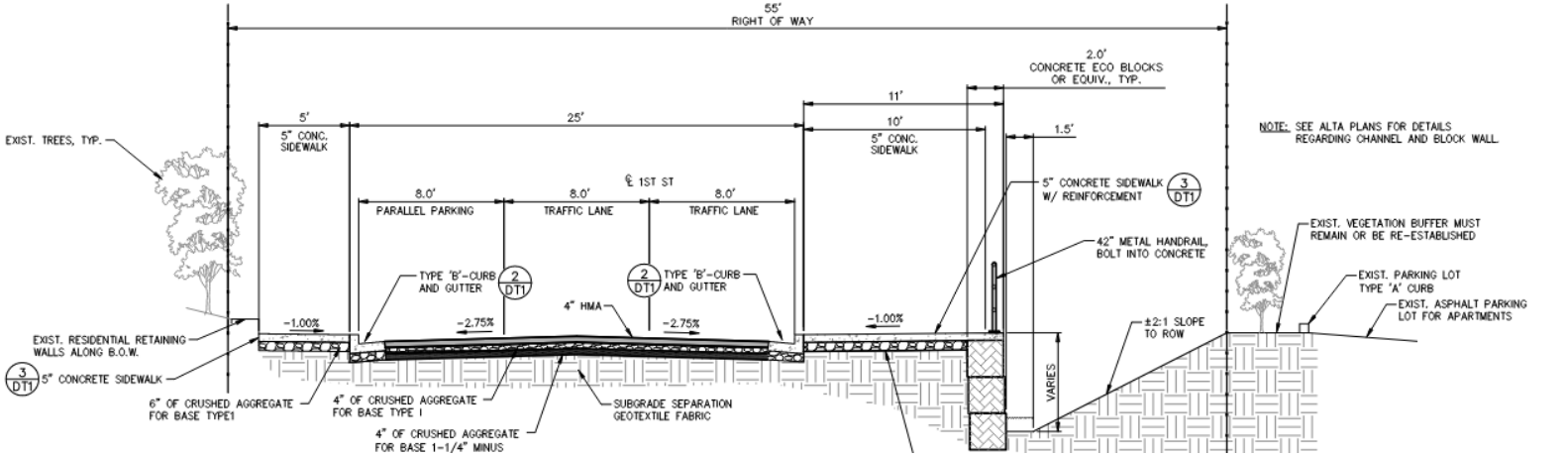

Creek Realignment

- Concrete Headwall
- 54” Culverts
- 90-deg Concrete Elbow
- Channel w/ Block Wall
- Concrete Box Culvert
- Block Wingwalls
- Remove Existing Box Culvert
- Abandon Culvert Under Apartments

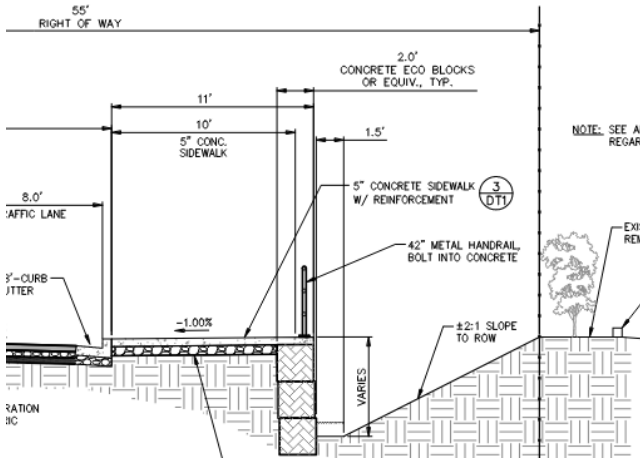

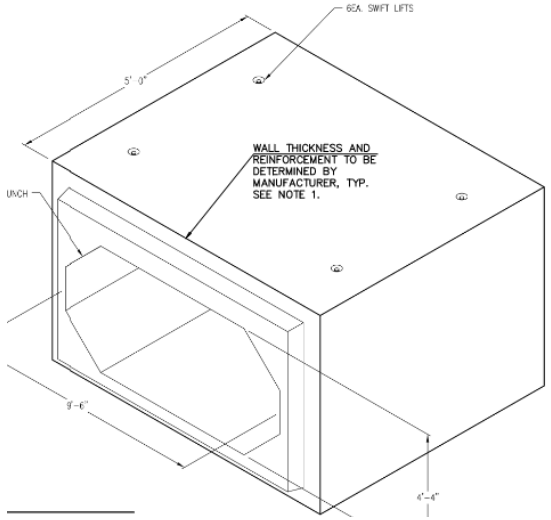

Don’t Forget about Bypass Pumping

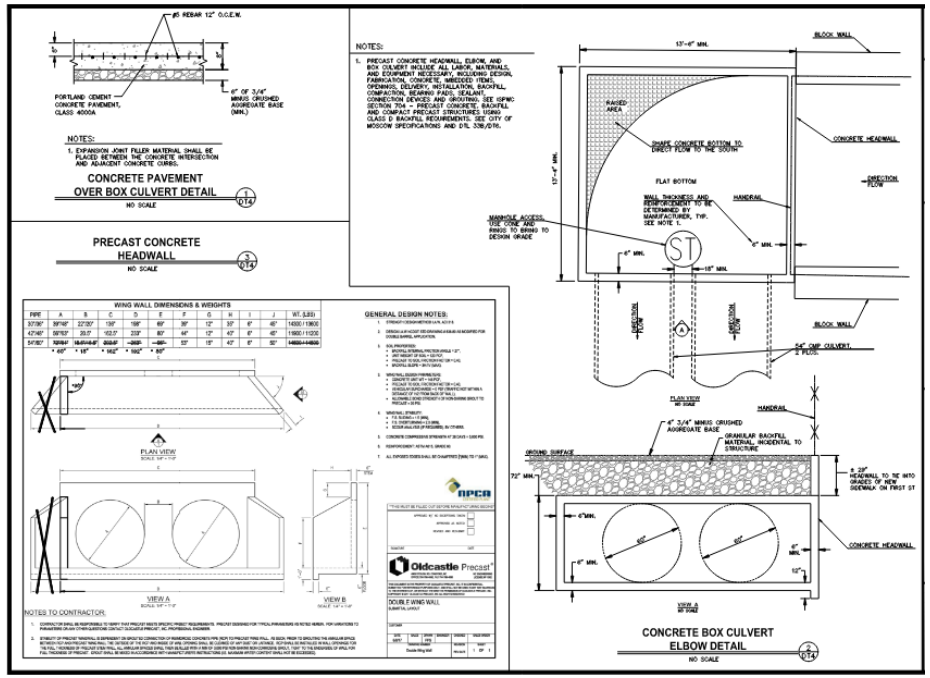

Creek Realignment

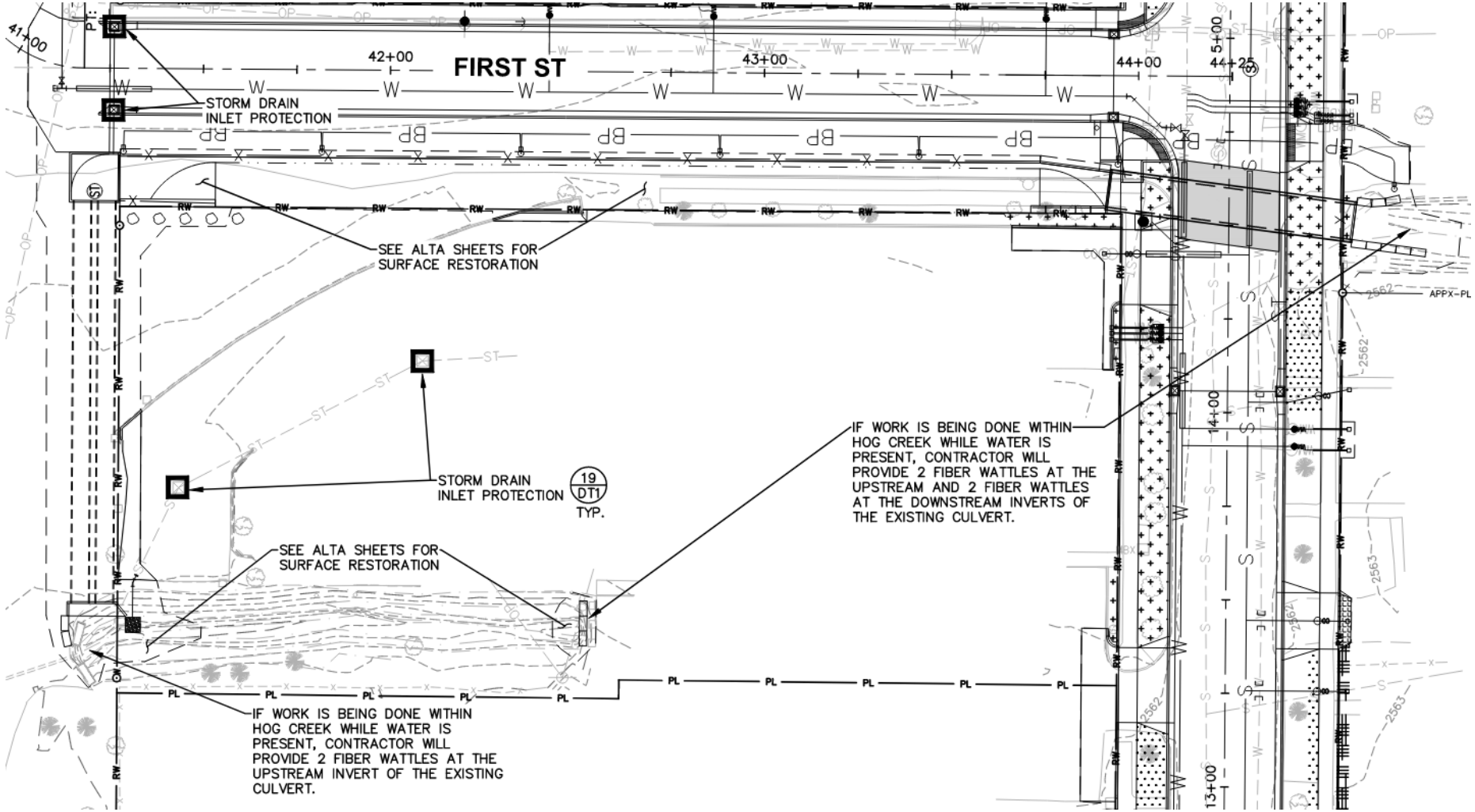

Utilities

- Water
  - Lilly Main: Highway 8 to First
  - Lilly Services: Highway 8 to Third
  - First Street Main & Services: Lieuallen to Lilly (Add Alt #1)
- Gravity Sewer & Services
  - Highway 8 to Third
- Minor Dry Utility Relocations
  - Avista to relocate poles on First Street
  - Contractor to coordinate

Utilities

- Box Culvert Crossing
- Sewer Services
  - Located by Roto-Rooter

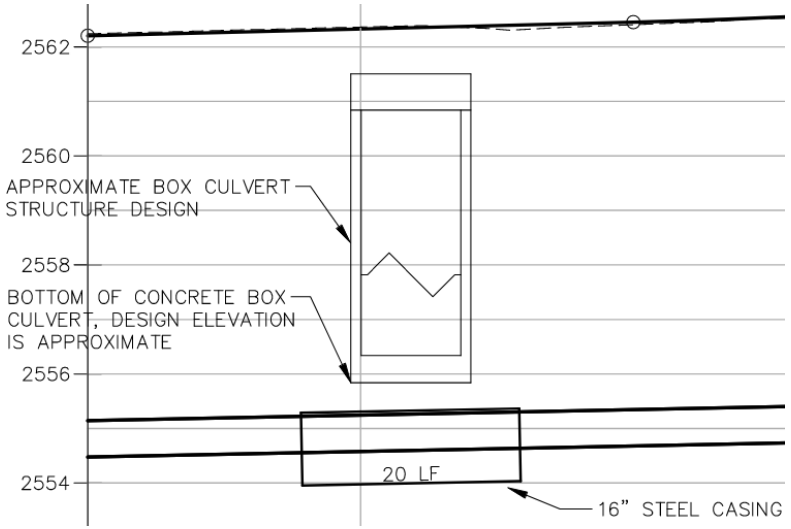

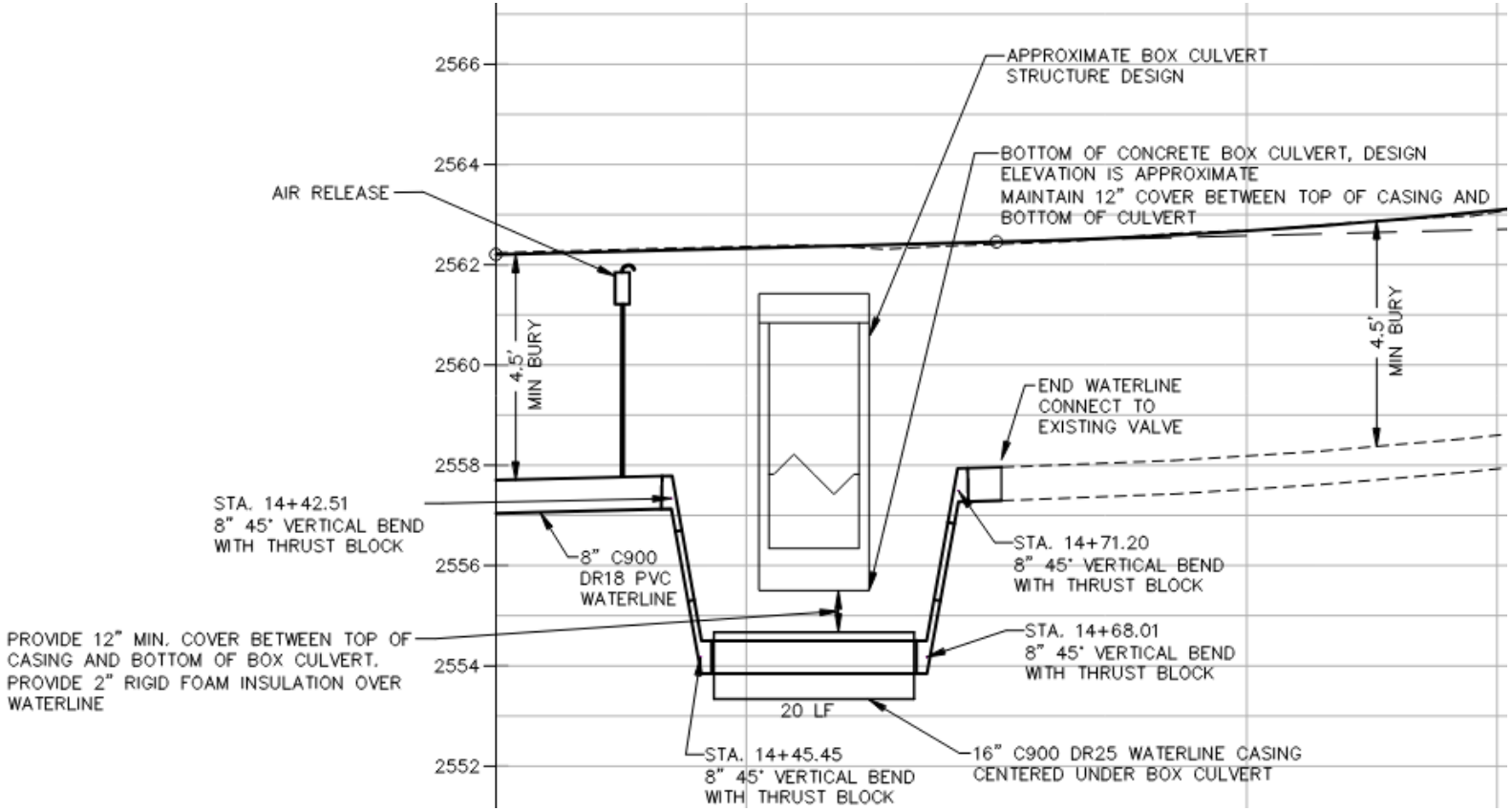

Miscellaneous Surface Restoration

- Irrigation modifications, where necessary
- Hydroseed
- Sod
- Landscape Rock

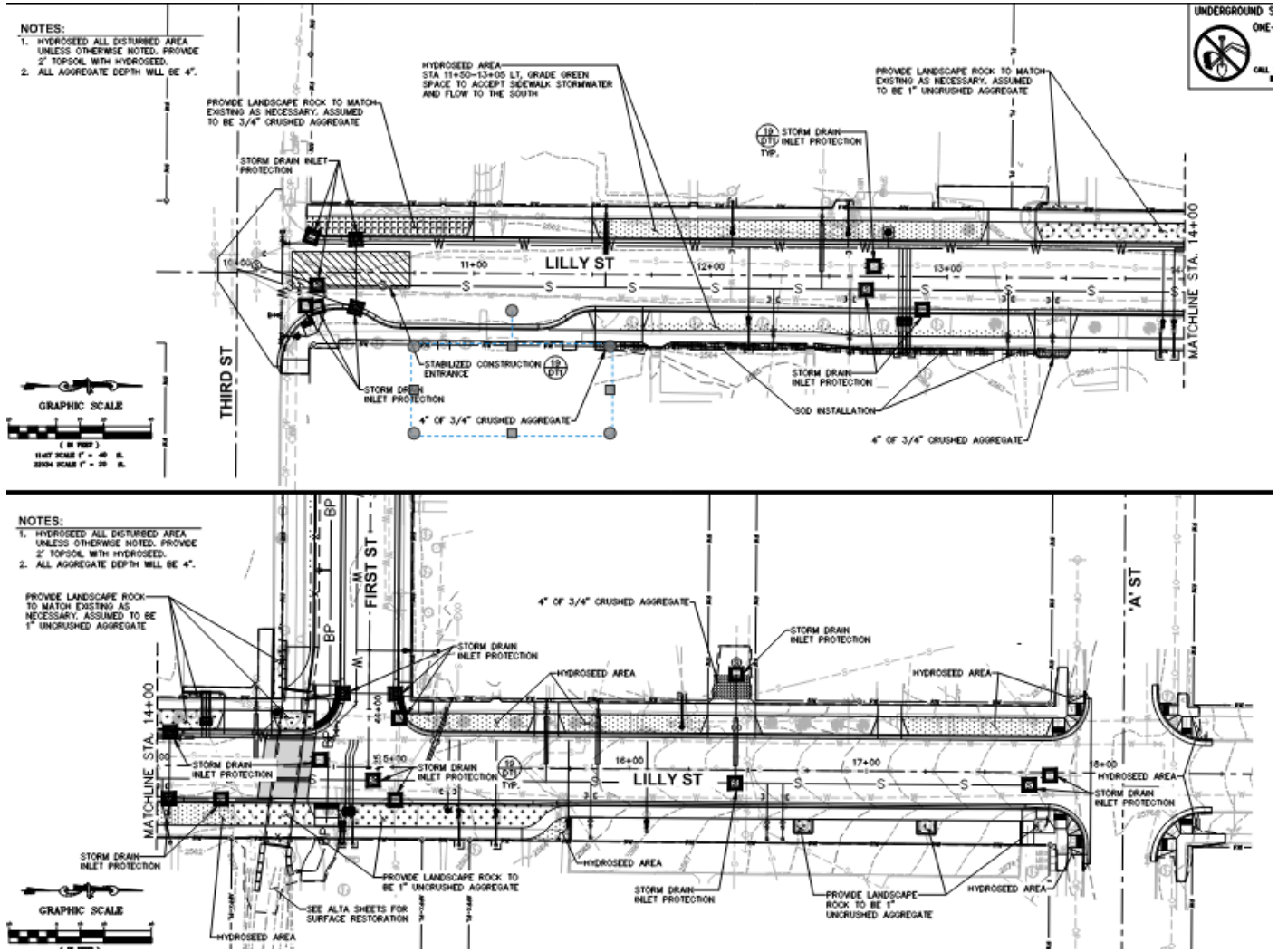

Traffic Control

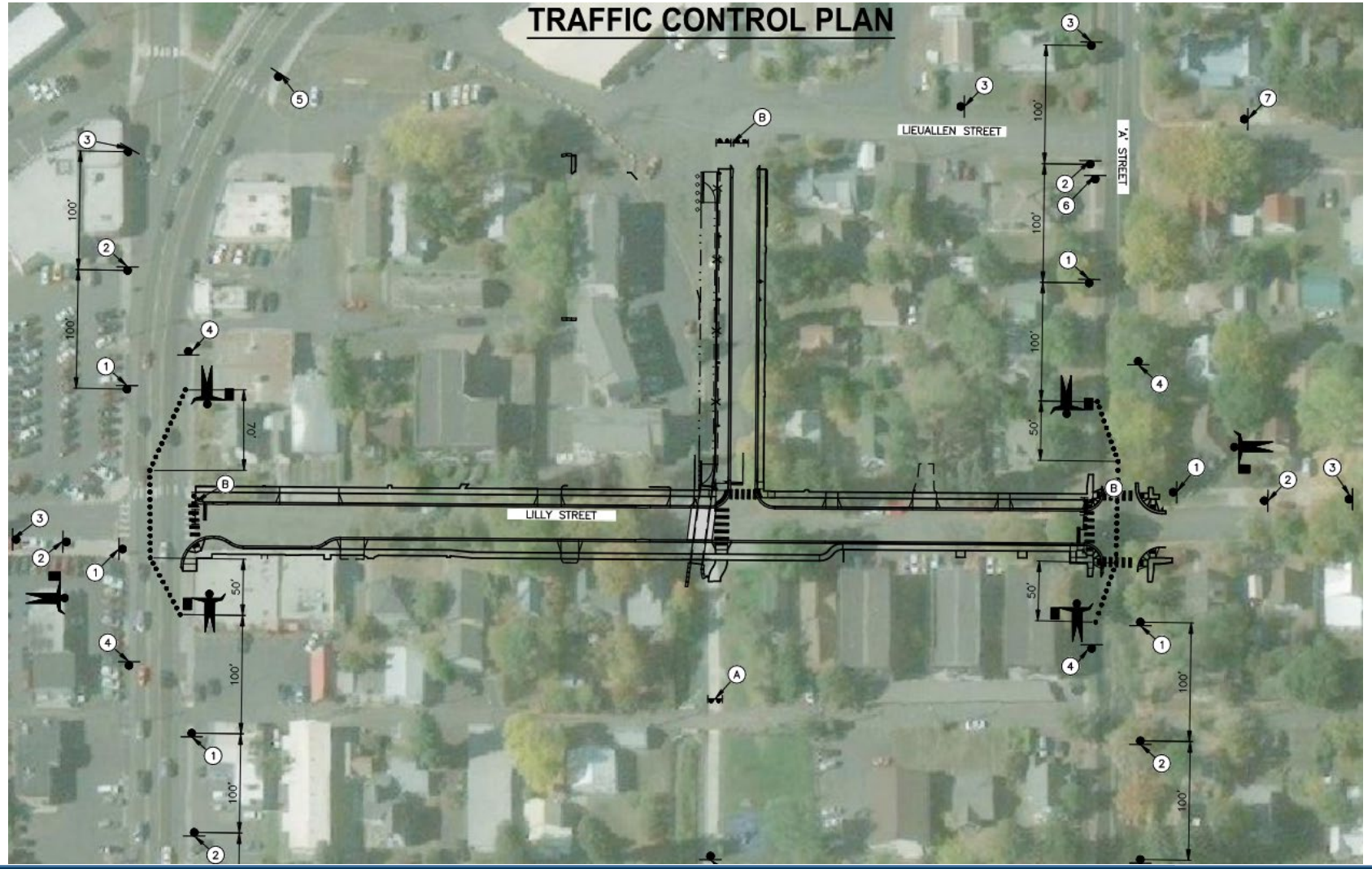

- Work within Highway 8 must be done at night
- Lilly Street may be closed to through traffic
- Maintain local traffic

Other Project Items

- Construction Staking – Contractor
- Materials Testing – Contractor Responsibility
- Engineer provided Traffic Control Plan
- All Permits and Fees are the Contractor's responsibility
  - Except ITD Permit will be provided by City
- Contractor responsible for staging
- Liquidated Damages - $4,000/Day
- Estimated Construction Costs:
  - Total: $1,800,000 to $2,000,000
- Basis of Bid Award: Base Bid + Add Alt #1 or Base Bid (possible addendum)

Bidding & Construction Timeline

- Pre-Bid Meeting – Today, December 14th
- Addendum 1 (if necessary) – planned for week of January 2nd
- Deliver Bids – Tuesday, January 10th at 2pm, Office of Community Development, Engineering Division
  - Bid Opening at 2:15 pm
- Construction –
  - Start no earlier than May 15th, 2023; Substantial Completion by August 25th, 2023
  - If add alternate selected, Substantial Completion extended to Sept 15th, 2023
  - Contractor to have all necessary pipe and pipe appurtenances before beginning work.

Questions?

MOSCOW LILLY STREET – A STREET TO 3RD STREET

CITY OF MOSCOW

MEETING ROSTER –PRE-BID MEETING

Date: 12/14/2022 Time: **3:30 pm PT** **Location: 411 S. Main St. Moscow, ID 83843 – Chamber of Commerce**

NAME	COMPANY	PHONE	EMAIL
Matt Gillis	Welch Comer	(208) 416-4877	MGillis@WelchComer.com
Adam Dorsey	Welch Comer	(208) 292-5485	ADorsey@WelchComer.com
Jack Griffing	Welch Comer	(208) 664-3632	JGriffing@WelchComer.com
Courtney Kramer	Welch Comer		CKramer@WelchComer.com
David Busto	Consolidated Supply	208-625-9295	David.Busto@consolidatedsupply.com
JOHN FORNEY	GERMER CONST.	208-882-8482	jforney@germerconstruction.com
Scott Bontrager	City of Moscow	208.882.7030	Sbontrager@ci.moscow.id.us
Selwos Youmans	Youmans Exc. Svc.	208-669-2026	SGYoumans@hotmail.com
Eric Hensye	Big Sky Corp	208 640 4359	Eric@BigSkyIdaho.com
GARY DAVIS	MOTLEY MOTLEY INC	509-872-3511	KENNY@MOTLEYMOTLEY.COM

ADDENDUM NO. 2

JANUARY 05, 2023

RE: LILLY STREET RECONSTRUCTION 'A' ST. TO THIRD ST. - REBID

OWNER: CITY OF MOSCOW

FROM: Welch Comer & Associates, Inc.
330 E. Lakeside Ave., Ste. 101
Coeur d'Alene, Idaho 83814
Phone: (208) 664-9382 Fax: (208) 664-5946

TO: ALL PLAN HOLDERS

The following modifications, clarifications and information are hereby made a part of the contract provisions and shall be fully binding.

This Addendum consists of **5** pages: 2 Addendum pages and 3 attachment pages.

IMPORTANT: Bidders must acknowledge receipt of this Addendum as well as all other issued addenda on the Bid Form provided with the Contract Documents, which must be utilized by Bidder for bid to be considered responsive. Failure to do so may subject Bidder to disqualification.

SECTION 1: BIDDING INFORMATION AND DOCUMENTS

With reference to **BASE BID Schedule,** please replace with the attached revised bid schedules. Below are clarifications to some of the changes:

1. Base Bid Schedule Changes:
   - Pay Item, **901.4.1.C.1 – PRESSURE IRRIGATION SYSTEM MODIFICATIONS**, unit cost and total cost has been added for the contingency amount.

CLARIFICATIONS:

1. It was said in the meeting that the Liquidated Damages would be $3000/Day as it is said in the specifications. The Addendum No 1 has it as $4000/Day in the presentation pages of the addendum. Which Liquidated Damages value is correct?

   Liquidated damages shall be $3,000/Day.

2. There was some discussion at the meeting about the Ornamental Fencing on mounting it to the concrete sidewalk instead of drilling it into the retaining wall. Which installation will be required?

   Please bid the project with the expectation to install the Ornamental Fencing by drilling into the retaining wall per the plans.

3. On Sheet EC1 and EC2 it states in the notes to provide 2 feet of topsoil with hydroseed. Is it supposed to read 2 feet or 2 inches?

   Only 2 inches is required to for hydroseed surface restoration.

4. It says on the presentation page of Addendum No 1 that all work on Third Street to be done at night. On the traffic control plans it states in the notes that night work is only required during one-way flagging operations and two-way traffic to be maintained during daylight hours. Can you clarify?

   Because of the location of some of the sewer work, it will be necessary to reduce traffic down to one lane with flaggers. This work will need to be done at night as indicated by the statement in the plans.

Attachments

Revised Bid Schedules

END OF ADDENDUM 2

BASE BID

Bid Item No.	Description	Pay Unit	Est. Qty.	Unit Price	Total Value of Item ($)
201.4.1.B.1	CLEARING AND GRUBBING	LS	1	$	$
201.4.1.C.1	REMOVAL OF OBSTRUCTIONS	LS	1	$	$
201.4.1.D.1	REMOVAL OF BITUMINOUS SURF	SY	3,390	$	$
201.4.1.D.2	REMOVAL OF CONC SIDEWALK	SY	860	$	$
201.4.1.D.3	REMOVAL OF DRIVEWAY	SY	94	$	$
201.4.1.E.1	REMOVAL OF CURB	LF	1,530	$	$
201.4.1.F.1	REMOVAL OF HYDRANT	EA	1	$	$
201.4.1.F.2	REMOVAL OF EXISTING SIGNS	EA	3	$	$
201.4.1.F.3	REMOVAL OF CATCH BASIN	EA	6	$	$
201.4.1.F.4	REMOVAL OF WATER VAULT	EA	1	$	$
201.4.1.F.5	REMOVAL OF BOX CULVERT	EA	1	$	$
201.4.1.F.6	REMOVAL AND REINSTALLATION OF BOLLARDS	EA	2	$	$
202.4.1.A.1	EXCAVATION	CY	600	$	$
202.4.9.A.1	LANDSCAPE BOULDER	EA	5	$	$
401.4.1.A.1	WATER MAIN PIPE, 8" C900 DR18	LF	525	$	$
402.4.1.A.1	MANUAL AIR RELEASE STATION	EA	2	$	$
403.4.1.A.1	HYDRANT	EA	2	$	$
404.4.1.A.1	WATER SERVICE CONNECTION, 1"	EA	20	$	$
405.4.1.A.1	POTABLE WATERLINE CASING - 2", TYPE SCHEDULE 80	LF	170	$	$
405.4.1.A.2	POTABLE WATERLINE CASING - 8", TYPE C900 DR25	LF	120	$	$
405.4.1.A.3	POTABLE WATERLINE CASING - 16", TYPE C900 DR25	LF	60	$	$
405.4.1.A.4	POTABLE WATERLINE CASING - 16", TYPE STEEL	LF	20	$	$
501.4.1.B.1	GRAVITY SEWER PIPE SIZE - 8" TYPE ASTM D3034	LF	790	$	$
502.4.1.A.1	SANITARY SEWER MANHOLE - 48" STANDARD	EA	5	$	$
502.4.1.A.2	SANITARY SEWER MANHOLE - DOGHOUSE	EA	2	$	$
504.4.1.B.1	SEWER SERVICE LINE - 4"	EA	14	$	$
507.4.1.H.1	REMOVE MANHOLE	EA	6	$	$
601.4.1.A.5	10" STORM PIPE PVC ASTM D3034	LF	15	$	$
601.4.1.B.5	12" STORM PIPE PVC ASTM D3034	LF	148	$	$
601.4.1.A.15	54" CULVERT CORRUGATED ALUMINIZED STEEL	LF	220	$	$
601.4.1.B.5	12" C900 STORM PIPE	LF	80	$	$
602.4.1.F.1	CATCH BASIN	EA	8	$	$
704.4.1.B.1	BOX CULVERT	LF	66	$	$
704.4.1.D.1	CONCRETE BOX CULVERT ELBOW	EA	1	$	$
704.4.1.D.2	PRECAST CONCRETE HEADWALL	EA	1	$	$
705.4.1.A.1	PORTLAND CEMENT CONCRETE PAVEMENT, CLASS 4000A	SY	64	$	$
706.4.1.A.3	VERTICAL CURB - TYPE A	LF	283	$	$

Bid Item No.	Description	Pay Unit	Est. Qty.	Unit Price	Total Value of Item ($)
706.4.1.A.5	CURB & GUTTER - TYPE B	LF	1,668	$	$
706.4.1.A.11	ROLLED CURB - TYPE C	LF	198	$	$
706.4.1.E.1	CONCRETE SIDEWALK, 5"	SY	1,100	$	$
706.4.1.E.2	CONCRETE SIDEWALK, 6"	SY	110	$	$
706.4.1.F.1	CONCRETE DRIVEWAY APPROACH	SY	270	$	$
706.4.1.H.1	PEDESTRIAN RAMP w/ DETECTABLE WARNING DOMES	SY	84	$	$
801.4.1.B.1	1" MINUS UNCRUSHED AGGREGATE	TON	32	$	$
802.4.1.B.1	CRUSHED AGGREGATE FOR BASE TYPE I	TON	1,730	$	$
802.4.1.B.2	CRUSHED AGGREGATE FOR BASE, 1-1/4"(-)	TON	670	$	$
810.4.1.A.5	SUPERPAVE HMA, CLASS SP-3, 1/2" AGG	TON	660	$	$
901.4.1.C.1	PRESSURE IRRIGATION SYSTEM MODIFICATIONS	CA	15,000	$1.00	$15,000
1001.4.2.B.1	STABILIZED CONSTRUCTION ENTRANCE	EA	1	$	$
1005.4.1.I.1	FIBER WATTLE	LF	100	$	$
1006.4.1.C.1	INLET PROTECTION	EA	28	$	$
1007.4.1.A.1	TOPSOIL	CY	40	$	$
1007.4.1.B.1	SEEDING	SF	6,425	$	$
1007.4.1.C.1	SODDING	SY	100	$	$
1102.4.1.I.1	LIGHTED BOLLARDS	EA	6	$	$
1103.4.1.A.1	CONSTRUCTION TRAFFIC CONTROL	LS	1	$	$
2010.4.1.A.1	MOBILIZATION	LS	1	$	$
2050.4.1.C.1	SUBGRADE SEPARATION GEOTEXTILE	SY	3,210	$	$
SP 1.4.1.A.1	CONSTRUCTION SURVEY	LS	1	$	$
SP 6.4.1.A.1	SWPPP MANAGEMENT	LS	1	$	$
SP 7.4.1.A.1	ORNAMENTAL FENCE	LF	364	$	$
ALTA SP-1	CHANNEL	LF	290	$	$
ALTA SP-2	CONCRETE BLOCK RETAINING WALL	SFF	2,356	$	$
ALTA SP-3	REVEGETATION PLANTING	SF	4,400	$	$
ALTA SP-4	REVEGETATION SEEDING AND MULCHING	SF	4,390	$	$
ALTA SP-5	WATER MANAGEMENT	LS	1	$	$
ALTA SP-6	PROVIDE WATER	DAYS	60	$	$
				Total Base Bid	**$**

Total (written in words): _____

_____

ADD ALTERNATE 1: FIRST STREET

Bid Item No.	Description	Pay Unit	Est. Qty.	Unit Price	Total Value of Item ($)
201.4.1.D.2	REMOVAL OF CONC SIDEWALK	SY	106	$	$
202.4.1.A.1	EXCAVATION	CY	470	$	$
401.4.1.A.1	WATER MAIN PIPE, 8" C900 DR18	LF	285	$	$
403.4.1.A.1	HYDRANT	EA	1	$	$
404.4.1.A.1	WATER SERVICE CONNECTION, 1"	EA	3	$	$
405.4.1.A.3	POTABLE WATERLINE CASING - 16", TYPE C900 DR25	LF	20	$	$
706.4.1.A.5	CURB & GUTTER - TYPE B	LF	269	$	$
706.4.1.E.1	CONCRETE SIDEWALK, 5"	SY	150	$	$
802.4.1.B.1	CRUSHED AGGREGATE FOR BASE TYPE I	TON	242	$	$
802.4.1.B.2	CRUSHED AGGREGATE FOR BASE, 1-1/4"(-)	TON	157	$	$
810.4.1.A.5	SUPERPAVE HMA, CLASS SP-3, 1/2" AGG	TON	157	$	$
1006.4.1.C.1	INLET PROTECTION	EA	1	$	$
2010.4.1.A.1	MOBILIZATION	LS	1	$	$
2050.4.1.C.1	SUBGRADE SEPARATION GEOTEXTILE	SY	756	$	$
SP 1.4.1.A.1	CONSTRUCTION SURVEY	LS	1	$	$
SP 4.4.1.A.1	RETAINING WALL - SMALL	SF	46	$	$
SP 4.4.1.A.2	REMOVE AND RESET RETAINING WALL	SF	51	$	$
				Total Add Alternate 1	**$**

Total (written in words): _____

_____

CITY COUNCIL STAFF REPORT

DATE: Monday, February 6, 2023

AGENDA ITEM TITLE

Approval to update authorized signers on the City of Moscow Wells Fargo, Zions and US Bank Accounts - Sarah Banks

RESPONSIBLE STAFF	REVIEWED BY
Sarah Banks, Finance Director	This was reviewed by the Public Works/Finance Committee on January 23, 2023 and approved.
ADDITIONAL PRESENTER(S)	**OTHER RESOURCES**

DESCRIPTION

The Finance Department is updating authorized signers on the City of Moscow Wells Fargo, Zions and US Bank accounts. We are removing previous City Supervisor Gary Riedner, previous Mayor William Lambert, and previous Treasury Management Coordinator Julie Fry. We are adding City Supervisor Willard Belknap, Mayor Art Bettge and Assistant Finance Director Renee Tack.

STAFF RECOMMENDATION

Approval to update authorized signers on the City of Moscow Wells Fargo, Zions and US Bank accounts.

PROPOSED ACTIONS

ACTION: Approve updating the authorized signers on the City of Moscow Wells Fargo, Zions and US Bank accounts.

FISCAL IMPACT

PERSONNEL IMPACT

ATTACHMENTS

None

COMMITTEE STAFF REPORT

DATE: Monday, February 6, 2023

RESPONSIBLE STAFF

Aimee Hennrich, Planner I

ADDITIONAL PRESENTER(S)

OTHER RESOURCES

AGENDA ITEM TITLE

Proposed Lot Division and Lot Line Adjustment at 412 and 418 Southview Ave (ACTION ITEM) – Aimee Hennrich

DESCRIPTION

The applicant, Ryan Itani, is requesting a lot division to create three lots of approximately 7,292 sf, 7,695 sf, and 7,975 sf in size from two existing parcels of 11,028 sf and 11,977 sf in size. The properties are addressed as 412 and 418 Southview Ave. The intention of the lot division is to create one additional single-family lot. The subject properties are located within the Moderate Density, Single Family Residential (R-2) Zoning District, which requires a minimum lot size of 7,000 square feet. All proposed lots meet the minimum lot area requirements of the R-2 Zone. This item was reviewed by the Public Works and Finance Committee and recommended for approval on January 23, 2023.

STAFF RECOMMENDATION

Approve the lot division and lot line adjustment request at 412 and 418 Southview Ave with no conditions.

PROPOSED ACTIONS

PROPOSED ACTIONS: Approve the lot division and lot line adjustment request with no conditions; or approve the lot division and lot line adjustment request with conditions; or deny the lot division and lot line adjustment request; or provide staff further direction.

FISCAL IMPACT

PERSONNEL IMPACT

ATTACHMENTS

1. Application Materials.1
2. Public Comment
3. NPM LUP2022-0038 - 412 & 418 Southview Ave LD - PWF 01-23-23
4. Public Comment 2
5. Public Comment 3

Hodge & Associates, Inc. ENGINEERS • PLANNERS • LANDSCAPE ARCHITECTS • SURVEYORS

December 20, 2022

Mayor Bettge and Moscow City Council
City Hall
Moscow, Idaho

Re: Indian Hills 9th Addition Block 3 Lots 4 and 5 Lot Division.

Dear Mayor Bettge and City Council

The Indian Hills 9th Addition Block 3, Lots 4 and 5 owner, Itani Quality Homes is requesting a lot division. The proposed division would take a portion of lot 4 and lot 5 to create an additional lot.

Please see attached proposed record of survey for clarification.

Enclosed are:
1. Existing Plat
2. Proposed Record of Survey
3. Proposed Legal Descriptions

Please do not hesitate to contact me if you have any questions regarding this lot division request

Sincerely,

Scott Becker, PE
Principal
Hodge & Associates, Inc.

405 South Washington Street
PO Box 8728
Moscow, ID 83843

Tel: (208) 882-3520
Fax: (208) 882-2622
E-mail: hodge@moscow.com

SCOTT BECKER, PE PRINCIPAL

Received 12-20-2022

12/19/2022

Legal Description by Hodge & Associates for:
Itani Quality Homes, Inc.
Parcel 1

A parcel of land, being a portion of Lot 4 of Block 3 of Indian Hills 9th Addition, Instrument #595522, Latah County Records, located in the Southwest Quarter of Section 17, Township 39 North, Range 5 West, Boise Meridian, Latah County, Idaho, described as follows:

Beginning at the southwest corner of Lot 4 of Block 3 of Indian Hills 9th Addition;
Thence along the west line of said Lot 4, N05º23'18"W, 116.96 feet to the northwest corner thereof;
Thence along the north line of said Lot 4, N75º50'39"E, 69.31 feet;
Thence leaving said north line, S00º23'18"E, 116.73 feet to a point on the south line of said Lot 4 and on the north right-of-way line of Southview Avenue;
Thence along said south line and along said north right-of-way line the following two courses:
31.55 feet along a curve to the left, said curve having a Delta = 9º02'16",
Radius = 200.00 feet, Chord = 31.52 feet and a Chord Bearing = S75º49'38"W;
Thence S71º18'30"W, 27.93 feet to the **Point of Beginning**.

Parcel contains 7,292 square feet, more or less.

Subject to: A utility and sidewalk easement along the south 10.00 feet and a sewer service easement along the west 10.00 feet of the above described parcel, as shown on the plat of Indian Hills 9th Addition.

DRAFT

F:\4609-Itani Southview Lot Line Adjustment\4609-Word\4609 Parcel 1 Legal.doc\Legal Description

Received 12-20-2022

12/19/2022

Legal Description by Hodge & Associates for:
Itani Quality Homes, Inc.
Parcel 2

A parcel of land, being portions of Lots 4 and 5 of Block 3 of Indian Hills 9th Addition, Instrument #595522, Latah County Records, located in the Southwest Quarter of Section 17, Township 39 North, Range 5 West, Boise Meridian, Latah County, Idaho, described as follows:

Beginning at the southeast corner of Lot 4 of Block 3 of Indian Hills 9th Addition;
Thence along the south line of said Lot 4 and along the north right-of-way line of Southview Avenue, 30.68 feet along a curve to the left, said curve having a Delta = 8º47'16", Radius = 200.00 feet, Chord = 30.65 feet and a Chord Bearing = S84º44'24"W;
Thence leaving said south line and said north right-of-way line N00º23'18"W, 116.73 feet to a point on the north line of said Lot 4;
Thence along said north line, N75º50'39"E, 33.28 feet to the northwest corner of Lot 5 of Block 3 of Indian Hills 9th Addition;
Thence along the north line thereof, S80º28'17"E, 42.81 feet;
Thence leaving said north line, S09º31'43"W, 117.64 feet to a point on the south line of said Lot 5 and on the north right-of-way line of Southview Avenue;
Thence along said south line and along said north right-of-way line, 23.74 feet along a curve to the left, said curve having a Delta = 6º48'02", Radius = 200.00 feet, Chord = 23.72 feet and a Chord Bearing = N87º27'57"W to the **Point of Beginning**.

Parcel contains 7,695 square feet, more or less.

Subject to: A utility and sidewalk easement along the south 10.00 feet of the above described parcel, as shown on the plat of Indian Hills 9th Addition.

DRAFT

PROFESSIONAL LAND SURVEYOR
LICENSED
17534
STATE OF IDAHO
MICHAEL E. DAHLIN

F:\4609-Itani Southview Lot Line Adjustment\4609-Word\4609 Parcel 2 revised.doc\Legal Description

Received 12-20-2022

12/19/2022

Legal Description by Hodge & Associates for:
Itani Quality Homes, Inc.
Parcel 3

A parcel of land, being a portion of Lot 5 of Block 3 of Indian Hills 9th Addition, Instrument #595522, Latah County Records, located in the Southwest Quarter of Section 17, Township 39 North, Range 5 West, Boise Meridian, Latah County, Idaho, described as follows:

Beginning at the southeast corner of Lot 5 of Block 3 of Indian Hills 9th Addition;
Thence along the south line of said Lot 5 and along the north right-of-way line of Southview Avenue, 60.25 feet along a curve to the left, said curve having a Delta = 17º15'37",
Radius = 200.00 feet, Chord = 60.02 feet and a Chord Bearing = N75º26'07"W;
Thence leaving said south line and said north right-of-way line N09º31'43"E, 117.64 feet to a point on the north line of said Lot 5;
Thence along said north line, S80º28'17"E, 74.01 feet to the northeast corner of Lot 5 of Block 3 of Indian Hills 9th Addition;
Thence along the east line thereof, S16º07'48"W, 123.73 feet to the **Point of Beginning**.

Parcel contains 7,975 square feet, more or less.

Subject to: A utility and sidewalk easement along the south 10.00 feet and a sewer service easement along the east 10.00 feet of the above described parcel, as shown on the plat of Indian Hills 9th Addition.

DRAFT

F:\4609-Itani Southview Lot Line Adjustment\4609-Word\4609 Parcel 3 revised.doc\Legal Description

Received 12-20-2022

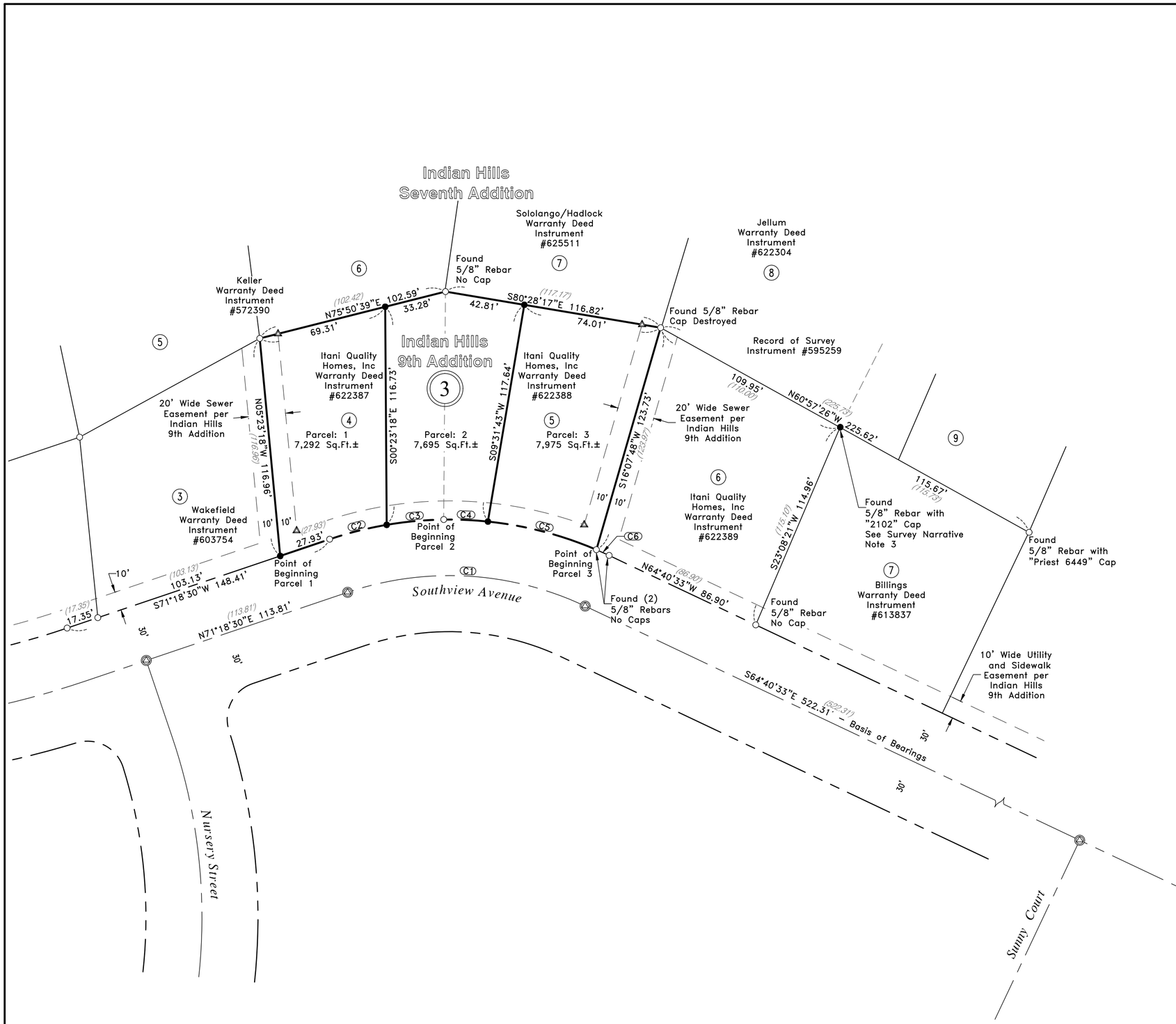

Section 17, T39N, R5W, BM

Survey References:

1. Indian Hills Seventh Addition to the City of Moscow, Instrument #413230, by J. Hammond, PE/LS #2102.
2. Warranty Deed, Instrument #572390, Pope to Keller.
3. Record of Survey, Instrument #595259, by D. Priest, PLS #6449.
4. Indian Hills 9th Addition, Instrument #595522, by J. Hammond, PS/LS #52102.
5. Warranty Deed, Instrument #603754, Blum to Wakefield.
6. Warranty Deed, Instrument #613837, Swift to Billings.
7. Warranty Deed, Instrument #622304, Swift to Jellum.
8. Warranty Deed, Instrument #622387, Indian Hills Trading Company, LLC to Itani Quality Homes, Inc.
9. Warranty Deed, Instrument #622388, Indian Hills Trading Company, LLC to Itani Quality Homes, Inc.
10. Warranty Deed, Instrument #622389, Indian Hills Trading Company, LLC to Itani Quality Homes, Inc.
11. Warranty Deed, Instrument #625511, Vogt to Sotolongo/Hadlock.

Surveyor's Certificate

I, Michael E. Dahlin, PLS #17534, State of Idaho, do hereby certify that the survey represented by this map was performed by me or under my supervision in accordance with the laws of the State of Idaho and at the request of Rafik Itani in November 2022.

Basis of Bearings

The Basis of Bearings for this survey is identical to the Idaho Coordinate System, West Zone, NAD 83 as shown between the found monuments along the centerline of Southview Avenue, said bearing being S64°40'33"E.

Surveyor Narrative

1. The purpose of this survey was to locate, monument and map the boundaries of Lots 4, 5 and 6 of Block 3 of Indian Hills 9th Addition, Instrument #595522, and to subdivide Lots 4 and 5 into three separate parcels, as shown.
2. The centerline of Southview Avenue was located to establish the Basis of Bearings and primary boundary control. Lots 4, 5 and 6 of Block 3 of Indian Hills 9th Addition was rotated to project basis and located accordingly.
3. The rebar marking the northeast corner of Lot 6 of Block 3 of Indian Hills 9th Addition was found badly bent and out of position. This corner was reestablished by proportion between the found northwest corner of said Lot 6 and the found northeast corner of Lot 7 of Block 3 of Indian Hills 9th Addition.
4. This survey was conducted without a title search. It does not show the extents of all easements and or encumberances, recorded or unrecorded, that may affect the property.
5. Prior to any conveyance, compliance with any state and local statutes, ordinances and regulations governing the division of land are the landowner's responsibility.

Legend

- Set 5/8" Diameter Rebar w/Aluminum Cap Stamped "PLS 17534"
- Set 1/2" Diameter Rebar w/Yellow Plastic Cap Stamped "EASEMENT PLS 17534"
- Found 5/8" Diameter Rebar w/Yellow Plastic Cap Stamped "Hedco PE/LS 2102" or as Described
- Found Aluminum Cap Centerline Monument Stamped "Hedco PE/LS 2102"
- (1) Block Number
- (1) Lot Number
- (100) Record Data – per Indian Hills 9th Addition.
- New Parcel Boundary Line, this Survey
- Existing Lot/Parcel Boundary
- Original Lot Line, No Longer Parcel Boundary
- Centerline
- Right-of-Way
- Easement

Curve Table

Curve	Length	Delta	Radius	Chord	Chrd Brng
C1	130.60'	44°00'57"	170.00'	127.41'	S86°41'01"E
C2	31.55'	9°02'16"	200.00'	31.52'	S75°49'38"W
C3	30.68'	8°47'16"	200.00'	30.65'	S84°44'24"W
C4	23.74'	6°48'02"	200.00'	23.72'	N87°27'57"W
C5	60.25'	17°15'37"	200.00'	60.02'	N75°26'07"W
C6	7.43'	2°07'46"	200.00'	7.43'	S65°44'26"E

Curve Data Shown for Curves 1 and 6 Matches Corresponding Curve Data From Indian Hills 9th Addition.

N

SCALE: 1"=40'

FEET 40 30 20 10 0 20 40

NO._____
AT THE REQUEST OF:

DATE & HOUR:

_____ M.
TONYA DODGE
LATAH COUNTY RECORDER

FEE $_____ BY_____

Hedges & Associates, Inc.
Engineers • Planners • Surveyors
P.O. Box 8728
4405 S. Washington Street
Moscow, Idaho 83843
(208) 882-3520

RIM ROCK CONSULTING, INC.
Land Surveying
Site Engineering
Mapping
135 West 3rd Street #102 Moscow, Idaho 83843 208.883.5339 rimrock@moscowconsulting.net

PRELIMINARY NOT FOR RECORDING

PROFESSIONAL LAND SURVEYOR LICENSED 17534 STATE OF IDAHO MICHAEL E. DAHLIN

Record of Survey for:
Itani Quality Homes, Inc
Latah County, Idaho

Drafted by:	SW
Checked by:	MED
File Name:	4609 ROS.dwg
Tab:	Layout
Plot Style	Default.ctb
Project:	4609-10-22
Date:	12/15/22

1 of 1

Received 12-20-2022

595522

SHEET 1 OF 3	SW 1/4, S. 17 & SE 1/4, S. 18, T. 39 N., R. 5 W., B.M.

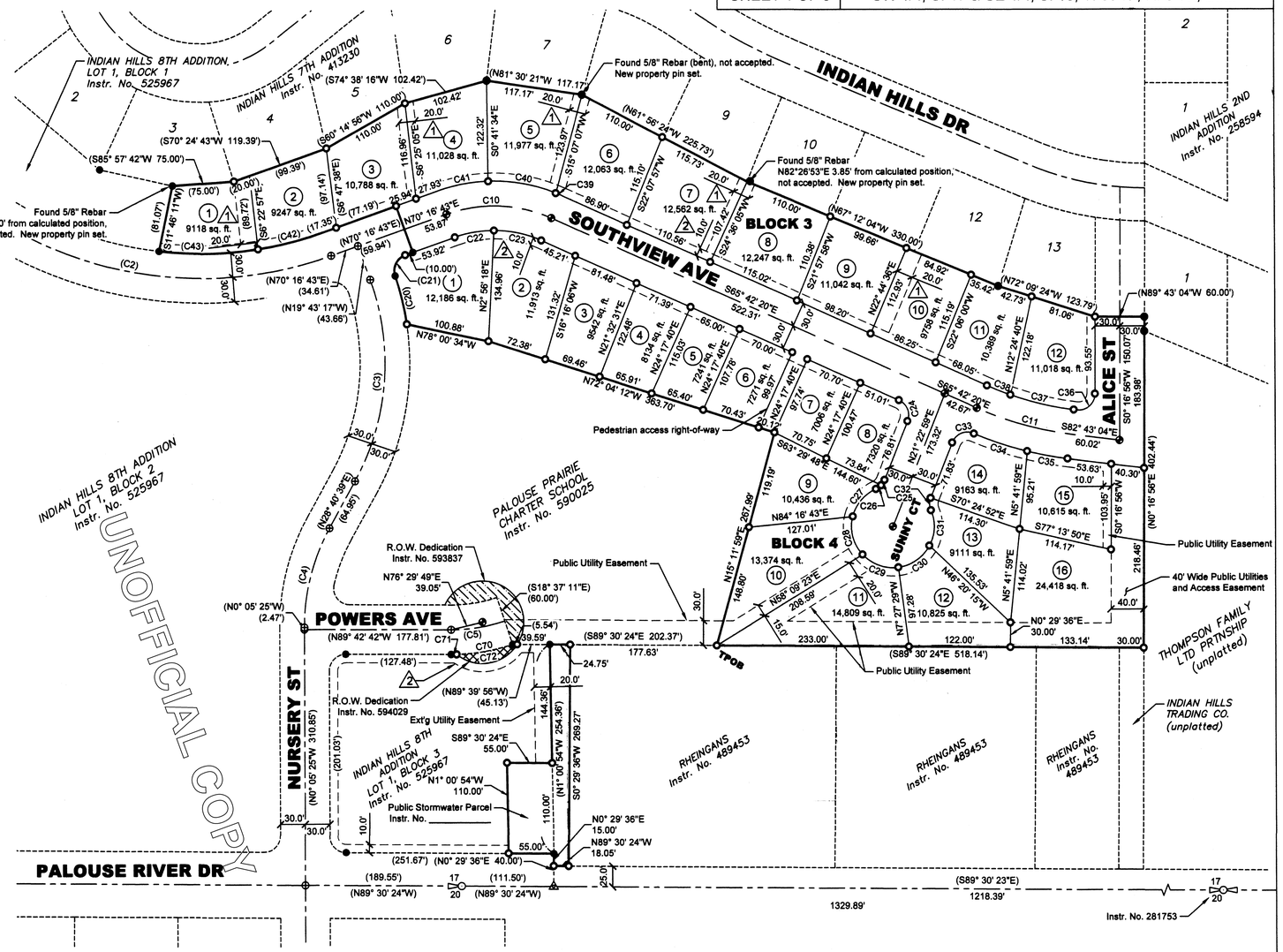

BASIS OF BEARING

The Basis of Bearing For This Survey Is The South Line Of The Southwest Quarter of Section 17 As Per Record Of Survey For the Nelson Addition Completed on 2-15-1974 by Hamilton and Voeller, Inc.

BOUNDARY DESCRIPTION

BLOCKS 3 & 4

A tract of land located in the Southwest quarter of Section 17, T. 39 N., R. 5 W., B.M., City of Moscow, Latah County, State of Idaho, more particularly described as follows;

Commencing at the Southwest corner of Section 17 running thence along the centerline of Palouse River Drive S 89°30'24" E 1441.13 feet to a 2" aluminum centerline monument; thence N 00°29'36" E 40.00 feet to a point on the northerly right-of-way line of said Palouse River Drive also being the southeast corner of Lot 1, Block 3 and the boundary of Indian Hills 8th Addition; thence continuing along said boundary N 1°00'54" W 254.36 feet along the easterly line of said Lot 1, Block 3 to the northeasterly corner of said lot; thence S 89°30'24" E 202.37 feet to the THE TRUE POINT OF BEGINNING for this description; thence N 15°11'59" E 267.99 feet; thence N 72°04'12" W 363.70 feet; thence N 78°00'34" W 100.88 feet to a point on the easterly right-of-way line of Nursery Street, also being the easterly boundary of said Indian Hills 8th Addition; thence continuing 60.56 feet along said boundary line which is a curve to the left having a central angle of 10°30'50", a radius of 330.00 feet, and a chord length of 60.47 feet bearing N 13°25'35" W; thence continuing 31.05 feet along said boundary line which is a curve to the right having a central angle of 88°57'44", a radius of 20.00 feet, and a chord length of 28.03 feet bearing N 25°47'52" E to a point on the southerly right-of-way line of Southview Avenue; thence continuing along said right-of-way line N 70°16'43" E 10.00 feet to a point on the easterly boundary line of said Indian Hills 8th Addition; thence continuing along said boundary line N 19°43'17" W 60.00 feet to a point on the northerly right-of-way line of said Southview Avenue; thence continuing along said right-of-way line S 70°16'43" W 94.55 feet; thence continuing 202.05 feet along said right-of-way line which is a curve to the right having a central angle of 26°36'47", a radius of 435.00 feet, and a chord length of 200.24 feet bearing S 83°35'07" W to a point on the easterly boundary of said Indian Hills 8th Addition; thence continuing along said boundary line N 11°46'11" E 81.07 feet to a point on the southerly boundary line of Indian Hills 7th Addition; thence continuing along said boundary line N 85°57'42" E 75.00 feet; thence continuing along said boundary line N 70°24'43" E 119.39 feet; thence continuing along said boundary line N 60°14'56" E 110.00 feet; thence continuing along said boundary line N 74°38'16" E 102.42 feet; thence continuing along said boundary line S 81°30'21" E 117.17 feet; thence continuing along said boundary line S 61°56'24" E 225.73 feet; thence continuing along said boundary line S 67°12'04" E 330.00 feet; thence continuing along said boundary line S 72°09'24" E 123.79 feet to a point on the westerly right-of-way line of Alice Street; thence continuing along said boundary line S 89°43'04" E 60.00 feet to a point on the easterly right-of-way line of Alice Street, said point also being on the westerly boundary line of Indian Hills 2nd Addition; thence S 00°16'56" W 402.44 feet; thence N 89°30'24" W 518.14 feet to the TRUE POINT OF BEGINNING.

100 0 100 200
Scale: 1" = 100'

LEGEND

- Centerline
- Section Line
- New Lot Line
- Existing Lot Line
- Plat Boundary
- Utility Easement
- Existing Fence Line
- XXXXXX Field Measurement
- (XXXXXX) Record Measurement
- Found Property Corner (as described)
- Set 5/8" dia. Rebar w/ yellow cap stamped, "HEDCO, Inc. PE/LS 2102"
- Calculated Point
- Set Centerline Monument
- Found Centerline Monument or Lewiston Control Network Monument
- Found 1/16 Corner
- Found 1/4 Corner
- Found Section Corner

Curve Table

Curve #	Length	Radius	Delta	Chord Direction	Chord Length
(C1)	290.58'	600.00'	27°44'56"	S61° 55' 16"E	287.75'
(C2)	500.54'	465.00'	61°40'28"	S78° 53' 02"E	476.72'
(C3)	253.42'	300.00'	48°23'56"	N4° 28' 41"E	245.95'
(C4)	125.52'	250.00'	28°46'04"	N14° 17' 37"E	124.21'
(C5)	66.00'	200.00'	18°54'29"	S80° 50' 03"W	65.70'
(C6)	132.82'	500.00'	15°13'10"	S6° 35' 41"W	132.43'
(C20)	60.56'	330.00'	10°30'50"	N13° 25' 35"W	60.47'
(C21)	31.05'	20.00'	88°57'44"	S25° 47' 52"W	28.03'
(C42)	81.48'	435.00'	10°43'55"	N75° 38' 41"E	81.36'

Curve #	Length	Radius	Delta	Chord Direction	Chord Length
(C43)	120.57'	435.00'	15°52'52"	N88° 57' 04"E	120.19'
C10	130.60'	170.00'	44°00'57"	S87° 42' 48"E	127.41'
C11	118.77'	400.00'	17°00'44"	S74° 12' 42"E	118.33'
C22	48.26'	140.00'	19°45'09"	S80° 09' 18"W	48.03'
C23	59.29'	140.00'	24°15'47"	N77° 50' 14"W	58.84'
C25	7.75'	20.00'	22°12'28"	N32° 29' 13"E	7.70'
C26	7.75'	20.00'	22°12'28"	N54° 41' 41"E	7.70'
C27	45.07'	50.00'	51°38'34"	S39° 58' 37"W	43.56'
C28	49.71'	50.00'	56°57'55"	S14° 19' 38"E	47.69'

Curve #	Length	Radius	Delta	Chord Direction	Chord Length
C29	47.69'	50.00'	54°38'54"	S70° 08' 02"E	45.90'
C30	47.54'	50.00'	54°28'35"	N55° 18' 13"E	45.77'
C31	44.59'	50.00'	51°05'51"	N2° 31' 00"E	43.13'
C34	68.09'	430.00'	9°04'24"	S71° 30' 23"E	68.02'
C35	50.10'	387.33'	7°24'40"	S79° 22' 49"E	50.07'
C36	33.86'	20.00'	97°00'00"	N48° 46' 56"E	29.96'
C37	79.26'	370.00'	12°16'25"	S76° 34' 51"E	79.11'
C38	30.60'	370.00'	4°44'19"	S68° 04' 29"E	30.59'
C39	7.43'	200.00'	2°07'46"	N66° 46' 13"W	7.43'

Curve #	Length	Radius	Delta	Chord Direction	Chord Length
C40	83.99'	200.00'	24°03'39"	N79° 51' 56"W	83.37'
C41	62.22'	200.00'	17°49'31"	S79° 11' 29"W	61.97'
C70	69.01'	230.00'	17°11'29"	N79° 58' 33"E	68.75'
C71	6.89'	230.00'	1°43'00"	N89° 25' 48"E	6.89'
C72	83.61'	50.00'	95°48'43"	N80° 44' 40"E	74.20'

NOTES

1. 20 foot wide sewer service easement for the benefit of adjacent lots in Indian Hills 7th Addition. The property line shall be the easement centerline, except where the easement is shown to be all on one lot.
2. 10 foot public utility and sidewalk easement, typical along right-of-way as shown

PROFESSIONAL ENGINEER • LAND SURVEYOR REGISTERED #2102 STATE OF IDAHO JACK S. HAMMOND 10/1/18

HEDCO
HAMMOND ENGINEERING & DEVELOPMENT CO.
528 BRYDEN AVENUE LEWISTON, IDAHO 83501
(208) 798-5422

INDIAN HILLS 9TH ADDITION
SW 1/4, S. 17 & SE 1/4, S. 18, T. 39 N., R. 5 W., B.M.
CITY OF MOSCOW
LATAH COUNTY, IDAHO

SCALE 1"=100'	
DRAWN BY MEE	CHECKED BY JSH
DATE 10-01-18	JOB # 1722
SHEET 1 OF 3	
DRAWING # 1722-FP1	

595522

SHEET 2 OF 3	SW 1/4, S. 17 & SE 1/4, S. 18, T. 39 N., R. 5 W., B.M.

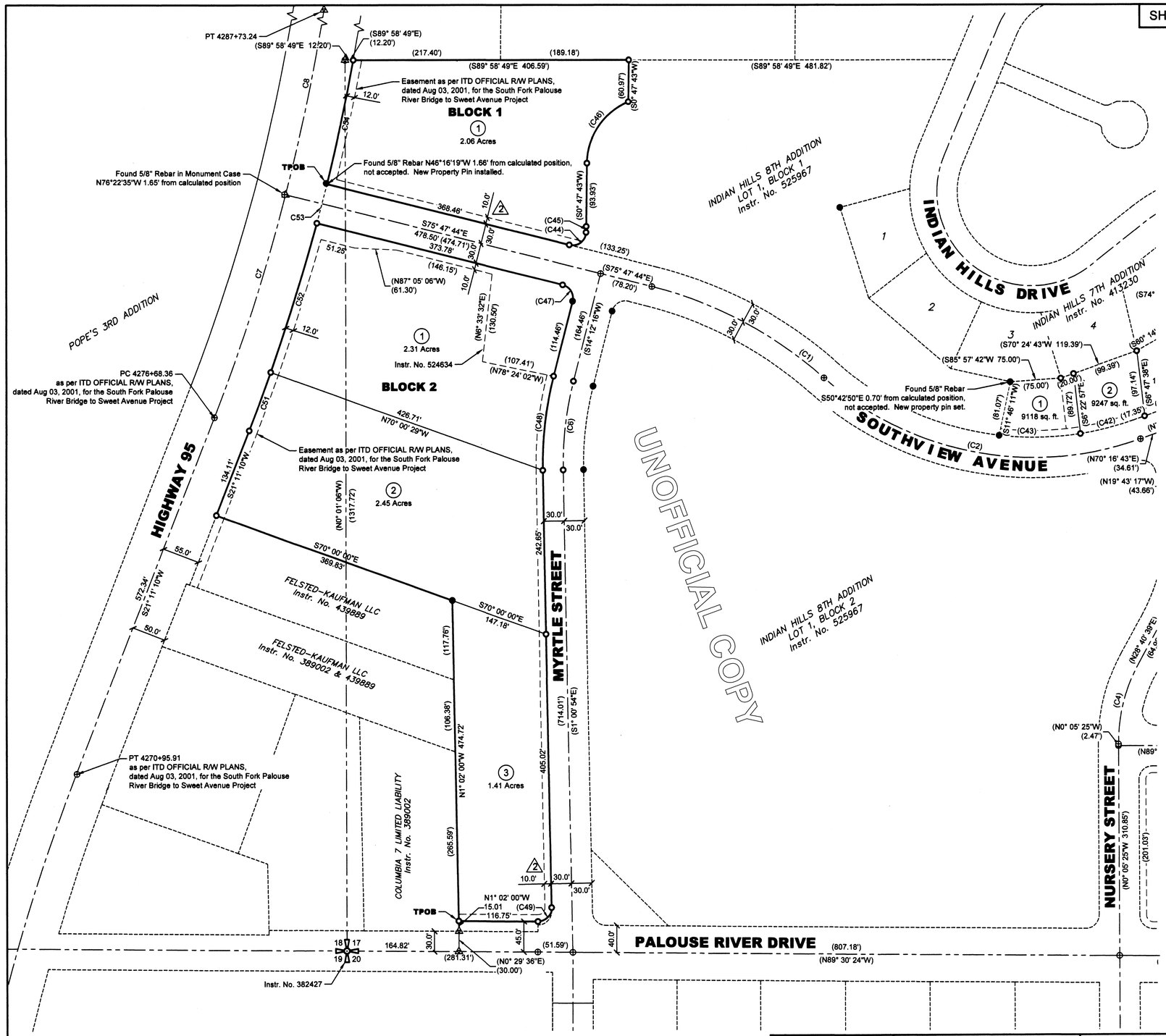

BLOCK 1 BOUNDARY DESCRIPTION

A tract of land located in the Southwest quarter of Section 17, T. 39 N., R. 5 W., B.M., City of Moscow, Latah County, State of Idaho, more particularly described as follows; Commencing at the Southwest corner of Section 17 running thence along the centerline of Palouse River Drive S89°30'24"E 164.82 feet to a point; thence N0°29'36"E 30.00 feet to a point on the northerly right-of-way line of said Palouse River Drive; thence N1°02'00"W 15.01 feet to a point on the northerly right-of-way line of said Palouse River Drive; thence N1°02'00"W 474.72 feet; thence N70°00'00"W 369.83 feet to a point on the easterly right-of-way line of Highway 95; thence along said right-of-way line N21°11'10"E 134.11 feet; thence continuing along said right-of-way line which is a curve to the left having a central angle of 1°45'35", a radius of 3007.75 feet and chord length of 92.37 feet, bearing N20°18'23"E to a point; thence continuing along said right-of-way line which is a curve to the left having a central angle of 4°23'58", a radius of 3007.75 feet and chord length of 230.89 feet, bearing N17°13'37"E to a point on the southerly right-of-way line of Southview Avenue; thence N14°27'21"E 60.00 feet to a point on the northerly right-of-way line of Southview Avenue, also being on the easterly right-of-way line of said Highway 95, and THE TRUE POINT OF BEGINNING for this description; thence continuing along said Highway 95 right-of-way line which is a curve to the left having a central angle of 3°33'36", a radius of 3007.75 feet and chord length of 186.85 feet, bearing N12°06'15"E; thence S 89°58'49" E 406.59 feet to a point on the northwesterly boundary line of Indian Hills 8th Addition; thence continuing along said boundary line S 0°47'43" W 60.97 feet; thence continuing along said boundary line which is a curve to the left having a central angle of 66°25'19", a radius of 100.00 feet and a chord length of 109.54 feet, bearing S34°00'22"W; thence continuing along said boundary line S 0°47'43" W 93.93 feet; thence continuing along said boundary line which is a curve to the right having a central angle of 1°52'20", a radius of 270.00 feet and a chord length of 8.82 feet, bearing S 1°43'53" W; thence continuing along said boundary line which is a curve to the right having a central angle of 101°32'13", a radius of 20.00 feet, and a chord length of 30.98 feet bearing s 53°26'10"W to a point on the northerly right-of-way line of said Southview Avenue; thence continuing along said right-of-way line N 75°47'44" W 368.46 feet to the TRUE POINT OF BEGINNING.

BLOCK 2 BOUNDARY DESCRIPTION

A tract of land located in the Southwest quarter of Section 17, T. 39 N., R. 5 W., B.M., City of Moscow, Latah County, State of Idaho, more particularly described as follows; Commencing at the Southwest corner of Section 17 running thence along the centerline of Palouse River Drive S89°30'24"E 164.82 feet to a point; thence N0°29'36"E 30.00 feet to a point on the northerly right-of-way line of said Palouse River Drive; thence N1°02'00"W 15.01 feet to a point on the northerly right-of-way line of said Palouse River Drive and THE TRUE POINT OF BEGINNING for this description; thence N1°02'00"W 474.72 feet; thence N70°00'00"W 369.83 feet to a point on the easterly right-of-way line of Highway 95; thence along said right-of-way line N21°11'10"E 134.11 feet; thence continuing along said right-of-way line which is a curve to the left having a central angle of 1°45'35", a radius of 3007.75 feet and chord length of 92.37 feet, bearing N20°18'23"E to a point; thence continuing along said right-of-way line which is a curve to the left having a central angle of 4°23'58", a radius of 3007.75 feet and chord length of 230.89 feet, bearing N17°13'37"E to a point on the southerly right-of-way line of Southview Avenue; thence continuing along said right-of-way line S75°47'44"E 373.78 feet; thence continuing along said right-of-way line which is a curve to the right having a central angle of 90°00'00", a radius of 20.00 feet, and chord length of 28.28 feet bearing S30°47'44"E to a point on the westerly right-of-way line of Myrtle Street; thence continuing along said right-of-way line S14°12'16"W 114.46 feet; thence continuing along said right-of-way line which is a curve to the left having a central angle of 15°13'10", a radius of 530.00 feet, and a chord length of 140.37 feet bearing S 6°35'41" E; thence continuing along said right-of-way line S1°00'54"E 647.67 feet; thence continuing along said right-of-way line which is a curve to the right having a central angle of 91°30'30", a radius of 20.00 feet, and chord length of 28.65 feet bearing S44°44'21"W to a point on the new northerly right-of-way line of said Palouse River Drive; thence continuing along said right-of-way line N 89°30'24" W 116.75 feet to the TRUE POINT OF BEGINNING.

Curve Table

Curve #	Length	Radius	Delta	Chord Direction	Chord Length
(C1)	290.58'	600.00'	27°44'56"	S61° 55' 16"E	287.75'
(C2)	500.54'	465.00'	61°40'28"	S78° 53' 02"E	476.72'
(C6)	132.82'	500.00'	15°13'10"	S6° 35' 41"W	132.43'
(C44)	35.44'	20.00'	101°32'13"	S53° 26' 10"W	30.98'
(C45)	8.82'	270.00'	1°52'20"	S1° 43' 53"W	8.82'
(C46)	115.93'	100.00'	66°25'19"	S34° 00' 22"W	109.54'
(C47)	31.42'	20.00'	90°00'00"	S30° 47' 44"E	28.28'
(C48)	140.78'	530.00'	15°13'10"	S6° 35' 41"W	140.37'
(C49)	31.94'	20.00'	91°30'30"	S44° 44' 21"W	28.65'
C7	346.62'	2952.75'	6°43'33"	N17° 49' 24"E	346.42'
C8	758.26'	2952.75'	14°42'48"	N7° 06' 13"E	756.17'
C51	92.37'	3007.75'	1°45'35"	N20° 18' 23"E	92.37'
C52	230.94'	3007.75'	4°23'58"	N17° 13' 37"E	230.89'
C53	60.00'	3007.75'	1°08'35"	N14° 27' 21"E	60.00'
C54	186.88'	3007.75'	3°33'36"	N12° 06' 15"E	186.85'

100 0 100 200
Scale: 1" = 100'

PROFESSIONAL ENGINEER REGISTERED #2102 STATE OF IDAHO JACK S. HAMMOND
10/17/18

HEDCO
HAMMOND ENGINEERING & DEVELOPMENT CO.
528 BRYDEN AVENUE LEWISTON, IDAHO 83501
(208) 798-5422

INDIAN HILLS 9TH ADDITION
SW 1/4, S. 17 & SE 1/4, S. 18, T. 39 N., R. 5 W., B.M.
CITY OF MOSCOW
LATAH COUNTY, IDAHO

SCALE 1"=100'	
DRAWN BY MEE	CHECKED BY JSH
DATE 10-01-18	JOB # 1722
SHEET 2 OF 3	
DRAWING # 1722-FP2	

595522

DEDICATION

INDIAN HILLS TRADING COMPANY, LLC is the owner of the land and premises in the accompanying plat, have caused said land to be platted as an Addition to the City of Moscow, Idaho, to be known as Indian Hills 9th Addition. Said undersigned Member does herewith declare their intentions to include the land located within the boundaries of said plat and they hereby dedicate to the public use all of the easements & rights-of-ways as shown upon said plat.

IN WITNESS WHEREOF We do hereby set our hands.
This 1st day of Oct, 2018

NDIAN HILLS TRADING COMPANY, LLC

By: Sally Powers
Sally Powers - Member/Manager

STATE OF ~~IDAHO~~ } Washington
S.S.
COUNTY OF ~~LATAH~~ } Adams

On this 1st day of Oct, 2018, before me, the undersigned, a Notary Public, in and for said State, personally appeared Sally Powers, known to me, and/or identified to me on the basis of satisfactory evidence, to be the Agent of INDIAN HILLS TRADING COMPANY, LLC whose name is subscribed to this instrument and acknowledged to me that they executed the same on behalf of said company.

WITNESS MY HAND AND OFFICIAL SEAL

Shauna K Miller
Notary Public In and For the State of Idaho Residing at: Adams Co. Washington
My Commission Expires: Feb 21, 2019

Notary Public
State of Washington
SHAUNA K MILLER
My Appointment Expires Feb 21, 2019

SURVEYOR'S CERTIFICATE

I, Jack S. Hammond, Professional Engineer and Professional Land Surveyor in the State of Idaho, hereby certify that I have surveyed the Plat of Indian Hills 9th Addition to the City of Moscow, Idaho as herein drawn and described and that the streets, lots, distances and monuments have been measured and located as herein shown. Interior Lot Corner Pins will be set at a later date.
Witness my hand and seal 1st day of Oct, 2018

Jack S. Hammond
Jack S. Hammond Idaho License No.2102

REGISTERED PROFESSIONAL ENGINEER • LAND SURVEYOR
#2102
STATE OF IDAHO
JACK S. HAMMOND

FILINGS

Filed for record this 2nd day of Nov., 2018 at 10:23 o'clock A m. at the request of SHELLEY L. BENNETT and recorded in Book ____ of Plats, page ____ records of Latah County, State of Idaho.
595522
STEWART K. WESTBERG by S. Chapman, deputy 11.00 rec fee
Latah County Recorder

UNOFFICIAL COPY

LATAH COUNTY TREASURERS CERTIFICATION

Examined and approved this 30th day of Oct, 2018. I hereby certify that taxes and assessments on property shown herein have been paid for 2018 and preceding years this 30th day of 2018, 2018.

Latah County Treasurer

LATAH COUNTY TREASURER AND EX-OFFICIO TAX COLLECTOR IDAHO

LATAH COUNTY SURVEYOR

Examined and approved by Latah County Surveyor this Oct. day of 30, 2018.

John Erobury
Latah County Surveyor

CITY OF MOSCOW PLANNING AND ZONING COMMISSION

Examined and approved by action of the Moscow Planning and Zoning Commission at a regular meeting with a quorum present this 23rd day of May, 2018

Chairman Planning & Zoning Commission

CITY OF MOSCOW MAYOR

Examined and approved by action of the Moscow City Council at a regular meeting with a quorum present this 18th day of June, 2018. Dedication of all public streets and easements as described on this plat is hereby accepted in accordance with Section 50-1313, Idaho Code. Approval of this plat by the City of Moscow certifies agreement to allow connection of the above described property to the municipal water system and satisfies Section 50-1334, Idaho Code.

Bill Lambert
Mayor-City of Moscow, Idaho — City Clerk-City of Moscow, Idaho

CITY OF MOSCOW ENGINEER

Examined and approved by City Engineer this 26th day of OCTOBER, 2018

City Engineer-City of Moscow, Idaho

HEDCO
HAMMOND ENGINEERING & DEVELOPMENT CO.
528 BRYDEN AVENUE LEWISTON, IDAHO 83501
(208) 798-5422

INDIAN HILLS 9TH ADDITION
SW 1/4, S. 17 & SE 1/4, S. 18, T. 39 N., R. 5 W., B.M.
CITY OF MOSCOW
LATAH COUNTY, IDAHO

SCALE	
DRAWN BY MEE	CHECKED BY JSH
DATE 6-28-18	JOB # 1722
SHEET 3 OF 3	
DRAWING # 1722-FP3	

Public Works/Finance

I hope to attend your meeting, but want to make comments in any event

I strongly support this lot split proposal.

On the south side of the street, slightly to the east are 4 lots addressed 433, 439, 445, 457 which you will see in the plat in your packet have sizes ranging from 7006 to 7320 sq ft. which are smaller or comparable to the three proposed lots: 7292, 7695, 7975 sq ft. The four existing lots are built with houses that look similar to those on the north side of the street and in the Tax Assessor's parcel database have assessed improvement values of:
433 Southview $380,746
439 Southview $460,244
445 Southview $380,746
457 Southview $No assessed value in the database
Average value of small lot houses: $407,245

On the north side of the street to the east only two houses have values in the Assessors database
430 Southview $524,499
506 Southvies $447,832
On the south side of the street, on larger lots, one house is nearing completion, but there is no assessed value of improvements on any of the lots.
Average value of houses on larger lots: $486,165

Consider two cases:

1. two houses valued like the other large-lot houses on the block are constructed with a value of $486,165 each
2. three houses valued like the other small-lot houses on the block are constructed with a value of $407,245 each

The second option, the result of your approval of the lot split will result in more taxable assessed value for the city:
3x $407,245 - 2x $486,165 = $249,407 (value of 3 small-lot homes - value of 2 large-lot homes)

This is important because the City has a liability to maintain, repair and replace Southview Ave and the utilities under it. Those costs are proportional to the linear foot of the roadway. This proposal is fiscally prudent because it produces more tax revenue per linear foot of street frontage.

The proposal also addresses the Council's goal of creating more affordable housing. While none of these prices is anywhere near what can be afforded by many members of Moscow's workforce, the smaller-lot houses are still likely to be $80,000 less expensive than larger houses. That could be an important difference in price for some buyers.

To the west of the proposed lot split the zoning changes from R2 to R3. Immediately west is a twinhome 406/408 Southview. West of the twinhome is a 3-unit townhouse constructed by Moscow Affordable Housing Trust. These two structures have greater mass and lot coverage than the single family houses to the east. Considering the bulk and character of the street wall, it is unlikely that a casual observer will

realize that the homes on the smaller lots produced by this request are materially different from the ones to the east.

In conclusion, I'm making a general argument that density and smaller lot size is valuable to the City coffers,and the smaller lots will produce slightly more affordable houses, further the proposed change will not materially alter the character of the street or impact other property values.

Nils Peterson
Executive Director
Moscow Affordable Housing Trust, Inc
510 W Palouse River Drive, Moscow, ID 83843
MoscowHousingTrust.org
(509) 336-1664 (cell)

pronouns: he, him, his

NOTICE OF PUBLIC MEETING

Proposed Lot Division at 412 and 418 Southview Ave
in the City of Moscow, Idaho. Permit Application LUP2022-0038

A public meeting before the Public Works/Finance Committee of the City Council will be conducted during which the following proposal will be considered:

> Proposed lot division to create three lots of approximately 7,292 sf, 7,695 sf, and 7,975 sf in size from two existing parcels of 11,028 sf and 11,977 sf in size. The properties are addressed 412 and 418 Southview Ave, as shown on the vicinity map below. The intention of the lot division is to create one additional single family lot.

MEETING DATE: Monday, January 23, 2023

LOCATION OF MEETING: Council Chambers, Second Floor, Moscow City Hall
206 East Third Street, Moscow, Idaho

MEETING TIME: 4:00 p.m.

Note: Meeting start time is not necessarily indicative of the start time for the proposal advertised in this notice. Multiple hearings and/or agenda items may make it difficult to determine the start time, which could occur late in the meeting.

The file containing information on this matter is available for public review at the Community Development Department located in the Haddock Building at 504 S Washington Street, Moscow, Idaho. Call 883-7035 for a meeting agenda and further information about the matter. You may obtain further information about the public hearing process and procedures on the City Website at: https://www.ci.moscow.id.us/593/Public-Hearing-Notices

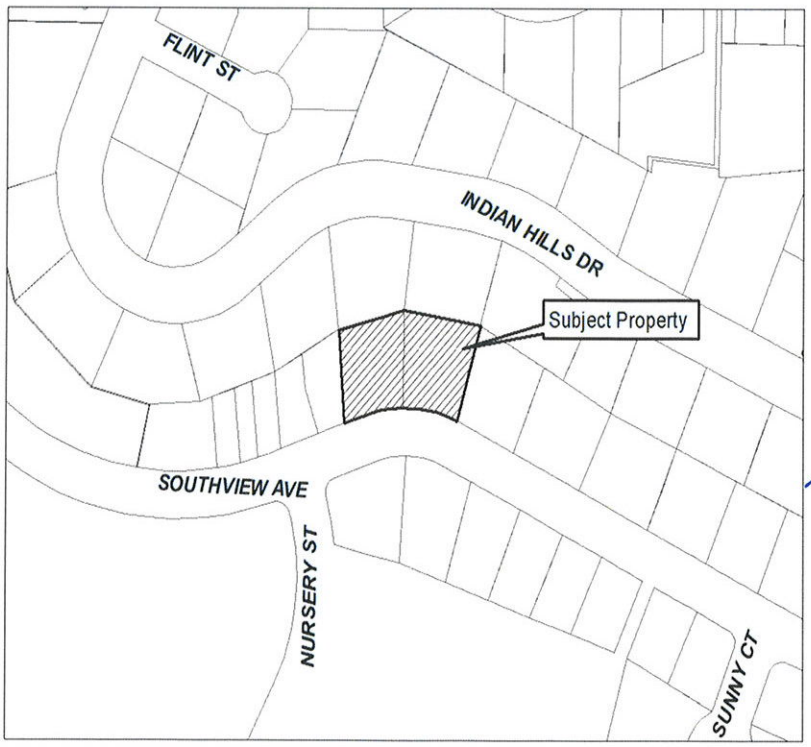

Laurie M. Hopkins
Moscow City Clerk

Jennifer Fleischman
Deputy City Clerk

Publish: January 7, 2023

> Dear Councilors:
>
> My husband, Lee Jellum, and I live at 763 Indian Hills Dr. We moved into our home in June 2022, so we are new to the area and unfamiliar with the subdivision process here in Moscow. Nevertheless, I write to express our concern with the proposed lot division of 412 and 418 on Southview Ave.
>
> As neighbors, we are concerned that the proposed lot division will increase traffic on an already busy road, decrease property values, allow taller houses that would block views, increase population density, and negatively impact the abundant wildlife(there is a red fox den in that area right now). Southview Ave. is a very busy road with the apartment complex and multi-family housing units near the two properties. The high density area attracts numerous visitors, many of whom do not drive slowly or carefully. Some of the homes on that street have small children who are at risk with the traffic already. Adding another home could increase the danger.
>
> Further, the process that is being used to approve the lot division does not seem to comply with the City Code. Title 5, Chapter 1 of the City Code (Public Ways and Property) identifies the procedures that a subdivider must follow when dividing an undeveloped lot. Section 1-1B defines a subdivision as "The division … of a developed or undeveloped lot, tract, or parcel of land, platted or unplatted and laid out or to be laid out … for homes…." According to this definition, dividing the two properties into three properties makes them their own subdivision (a subdivision within a bigger subdivision).
>
> Any subdivision thus defined may be approved only according to the procedures identified in sections 1-8 through 1-10. To my understanding, the subdivider has not followed those procedures. Rather, the subdivider has simply asked for a lot division so that an "additional single family lot" can be built. Because the subdivider is subdividing the land pursuant to the City Code, the subdivider and the Committee must follow the procedures in the code.
>
> Further, the Code contains no procedures or standards that apply to lot divisions. The code simply doesn't anticipate them. Rather, the entire subdivision plat likely must be amended.
>
> I would also note that the plat for the Indian Hills neighborhood was considered by the Committee in detail within the last few years, when that entire neighborhood plat went through the process identified in the Code. Through that process, the councilors were able to ask questions and confirm that the standards in the code were being met. Now, with one owner's request to change the lot dividing lines, the plat is being amended with no hearings, no process, and no standards.
>
> The Committee might also want to consider that if it allows this lot division, then any property owners in the subdivision could ask to subdivide their property as well. Would the Committee similarly just allow a letter request to serve as the basis for approval? Because there are no standards, it would be difficult for the City to deny these requests if it allows this request. If so, the plat has effectively been amended with no process and no standards.
>
> In sum, because the subdivider is seeking to create a new subdivision, the procedures identified in the City Code should be followed. We plan to attend the meeting tomorrow and will be happy to further discuss our concerns. Thank you for your time and consideration of our concerns.
>
> Sincerely,
> Linda Jellum
> Lee Jellum
> 763 Indian Hills Dr.
> Moscow, ID 83843

CAUTION: This message originated from outside the City of Moscow's network. Exercise caution when clicking links or opening attachments. If in doubt, please contact Information Systems at extension 7004.

Good morning,

I'm writing to express my concerns regarding the proposed split of 412 & 418 Southview into 3 single family smaller lots. As a resident of the neighborhood, this additional home has several negative impacts on the surrounding area and residents of the neighborhood. I'm hopeful you will consider the following concerns below.

First, property values. Some of the homes adjacent or all but adjacent to the subject lots are high end homes with views, spacious lots and an expectation of like housing next door. The split of the two lots will reduce the value of these mentioned homes as new small cramped homes will be built. This is not the expectation of those of us who live in this area. This is not the general make-up of the neighborhood (specifically this side of the street and above). New residents who have recently bought their homes with an understanding of the neighborhood density (relying on an advertised plat map) are going to be negatively impacted. This change benefits no one but the developer. More thoughtful planning of our neighborhoods and the impact of growth seems not be a priority. Instead, it's all about how many homes can be crammed into a development.

Secondly, one more house does increase road traffic on a street that already has too much constant traffic. Southview is being used as a shortcut to other parts of town and with the already dense population of the apartment buildings just west of these lots, this neighborhood is just experiencing too much traffic growth. The additional traffic is not only dangerous but also an unwanted nuisance in a once quiet neighborhood. With cars frequently speeding by, the easy neighborhood of walking dogs and letting children run free seems to be coming to an end.

Other concerns are that increasing density affects the local wildlife including quail, fox and more. We now have fox in the neighborhood and residents are loving the wildlife. One more house means one more fence, one more source of light pollution, one more source of noise….it's unwanted.

Thank you,

Tanja Blue

COMMITTEE STAFF REPORT

DATE: Monday, February 6, 2023

RESPONSIBLE STAFF

Cody Riddle, Deputy City Supervisor - Community Development

ADDITIONAL PRESENTER(S)

OTHER RESOURCES

AGENDA ITEM TITLE

Public Hearing - Fee Resolution Amendment to include fees for Personal Delivery Devices (ACTION ITEM) – Cody Riddle

DESCRIPTION

On August 1, 2022, the City Council adopted Resolution 2022-23, establishing fees for services to take effect on October 1, 2022 (Fee Resolution). Since that time, staff has developed an agreement for licensing the operation of personal delivery devices in the City right-of-way. As there is staff time to administer this license, a new fee of $250.00 is proposed. Per Idaho Code 63-1311A, amendment of the Fee Resolution to include a new fee requires a public hearing. Staff has noticed the hearing per Idaho Code and the draft resolution is presented to the City Council for review. The new fee is listed as Item J, located on page 17 of the attached resolution. It is identified as "Personal Delivery Devices Annual License Fee". This is the only change proposed to the existing fee structure.

The Administrative Committee recommended approval of the new fee on January 23, 2023, and that it be scheduled for public hearing before City Council.

STAFF RECOMMENDATION

Upon completion of the public hearing, adopt the FY 2023 Fee Resolution amendment.

PROPOSED ACTIONS

PROPOSED ACTIONS: Conduct a public hearing to consider the FY2023 Fee Resolution amendment and approve the additional licensing fee for personal delivery devices; or provide staff further direction.

FISCAL IMPACT

The new fee will cover the costs for reviewing and administering the provisions of the license agreement.

PERSONNEL IMPACT

ATTACHMENTS

1. Resolution 2023-___ Amending FY2023 fee schedule to include personal delivery devices_final

RESOLUTION NO. 2023 – __

A RESOLUTION OF THE CITY OF MOSCOW, IDAHO, A MUNICIPAL CORPORATION OF THE STATE OF IDAHO, AMENDING THE FEE SCHEDULE ATTACHED TO RESOULTION 2022-23 BY ADOPTING A NEW FEE FOR THE LICENSING OF PERSONAL DELIVERY DEVICES WITH ALL OTHER FEES REMAINING THE SAME; PROVIDING FOR THIS RESOLUTION TO REPLACE RESOLUTION 2022-23; AND PROVIDING FOR THE EFFECTIVE DATE OF FEBRUARY 6, 2023 FOR ALL FEES.

WHEREAS, Pursuant to Idaho Code Sections 63-1311 and 63-1311A, the City may impose and cause to be collected fees that are reasonably related to the actual cost of the service being rendered, regarding City fees for services and fee increases; and

WHEREAS, City Council has deemed it appropriate to charge an appropriate fee to cover the cost of licensing personal delivery devices according to the costs incurred by the City; and

WHEREAS, City Council has determined that the new fee included in this Resolution is appropriate and is reasonably related to the purpose for which such fee is charged;

NOW, THEREFORE, BE IT RESOLVED by the Mayor and City Council of the City of Moscow that all matters stated above are found to be true and correct and are incorporated herein by reference as if copied in their entirety and shall be adopted with the following:

1. That the fees set forth in Exhibit "A" attached hereto and made a part hereof, be in full force and effect in all matters relating to fees from and after the 6th day of February, 2023.
2. That this Resolution replaces Resolution 2022-23.
3. That any Resolution or provision thereof which is inconsistent with this Resolution is hereby repealed.

PASSED on Motion by the Following Vote:

	Aye	Nay	Abstain	Absent
Drew Davis	_____	_____	_____	_____
Sandra Kelly	_____	_____	_____	_____
Maureen Laflin	_____	_____	_____	_____
Hailey Lewis	_____	_____	_____	_____
Julia Parker	_____	_____	_____	_____
Gina Taruscio	_____	_____	_____	_____

ADOPTED by the City Council of the City of Moscow, Idaho and **APPROVED** by the Mayor of the City of Moscow, this ___ day of _____, 2023.

_____
Arthur D. Bettge, Mayor

CERTIFICATION and ATTESTATION. I hereby certify that the above is a true copy of a Resolution passed at a regular meeting of the City Council, City of Moscow, held on _____, 2023 and attest to the Mayor's signature.

_____
Laurie M. Hopkins, City Clerk

EXHBIT "A"

CITY OF MOSCOW
FY2023 FEE SCHEDULE

RESOLUTION NO. 2023 – __ **EFFECTIVE February 6, 2023**

SUBJECT		FEE
LAND USE AND DEVELOPMENT FEES		
A.	Conditional and Special Use Permits	545.00
B.	Variance	545.00
C.	Zoning or Comprehensive Plan Amendments	1,040.00
D.	Annexation Request (includes Comprehensive Plan and Zoning Review)	1,040.00
E.	Planned Unit Developments and Design Reviews	
	1. Preliminary or Major Amendment	700.00
	2. Final PUD	445.00 plus 28.00 per lot
	3. Minor Amendment or Design Review (where required)	295.00
F.	Subdivision Plat	
	1. Preliminary Plat	955.00
	2. Final plat	460.00 plus 28.00 per lot
G.	Lot Division Request	360.00 plus 16.00 per lot
H.	Lot Line Adjustment Request	215.00 plus 16.00 per lot
I.	Multi Family or Commercial Site Plan Review or Parking Lot Development or Modification Review:	135.00 plus 5.50 per parking space
J.	Fence Permit (fences over six feet in height may require a structural building permit)	31.00
K.	Accessory Structure Permit (One-story detached residential accessory building used as tool and storage sheds with a floor area less than 200 sq. ft. and where no building permit is required)	31.00
L.	Floodplain Development Permit	78.00
M.	Sign Permits (Additional electrical permit required for electrical signs)	
	1. Permanent Signs	78.00
	2. Portable Signs	31.00
	3. Temporary Signs	16.00
N.	Mobile Home Park Fees	
	1. Plan Review of Mobile Home Parks	560.00
	2. Final Plan Review of Mobile Home Parks	262.50
	3. Construction Permits (to be issued by the Administrative Authority upon approval of all final plans by the City Council to start construction)	525.00 plus 6.50 per lot
O.	Recreational Vehicle Parks	
	1. Preliminary Plan Review Fee	480.00
	2. Final Plan Review Fee	273.00
P.	Telecommunications Zoning Review	273.00

Q. Appeals (For an appeal of any decision of City board and/or commission, Zoning Administrator determination, or Building Official Determination)	273.00
GRADING PERMIT FEES	
A. Grading Plan Review Fees	
1. 50 cubic yards or less	no fee
2. 51 to 100 cubic yards	29.40
3. 101 to 1,000 cubic yards	43.00
4. 1,001 to 10,000 cubic yards	58.00
5. 10,001 to 100,000 cubic yards	58.00 for 1st 10,000 cubic yards plus 29.00 for each additional 10,000 cubic yards or fraction thereof
6. 100,001 cubic yards to 200,000 cubic yards	320.00 for 1st 100,000 cubic yards plus 16.25 for each additional 10,000 cubic yards or fraction thereof
7. 200,001 cubic yards or more	483.50 for 1st 200,000 cubic yards plus 8.65 for each additional 10,000 cubic yards or fraction thereof
B. Grading Permit Fees	
1. Permit Issuance Fee	26.50
2. 50 cubic yards or less	29.50
3. 51 to 100 cubic yards	43.00
4. 101 to 1,000 cubic yards	43.00 for 1st 100 cubic yards plus 20.50 for each additional 100 cubic yards or fraction thereof
5. 1,001 to 10,000 cubic yards	228 for 1st 1,000 cubic yards plus 17.25 for each additional 1,000 cubic yards or fraction thereof
6. 10,001 to 100,000 cubic yards	383.00 for 1st 10,000 cubic yards plus 78.25 for each additional 10,000 cubic yards or fraction thereof
7. 100,001 cubic yards or more	1,088.00 for 1st 100,000 cubic yards plus 43.00 for each additional 10,000 cubic yards or fraction thereof
BUILDING PERMIT FEES	
A. Permit Issuance Fee (charged with all permits except flat fee and commercial and institutional permits)	30.00
B. Plan Review Fee (Only for projects over $10,000 in valuation, excluding commercial windows, doors and roofs.)	65% of building permit fee (40% of building permit fee for duplicate plans)
C. Plan Review Deposit (credited toward plan review fee)	500.00
D. Building Permit Fees ***Valuation based on the ICC Building Valuations as published in the February issue of the Building Safety Journal with the following additions:*** *Decks $13.00 sq ft* *Porches $19.00 sq ft* *Pole Buildings $20.00 sq ft* *Unfinished Basement $43.00* ***Foundation Permits for Modular Homes:***	

Crawl Space $21.40 *Unfinished Basement $43.00* *Finished Basement $107.08*	
Total Valuation	Valuation Fee
$1.00 to $500.00	27.50
$501.00 to $2,000	27.00 for first 500.00 plus 3.50 for each additional 100 or fraction thereof to and including 2,000
$2,001 to $25,000	79.50 for the first 2,000 plus 14.50 for each additional 1,000 or fraction thereof, to and including 25,000
$25,000 to $50,000	413.00 for first 25,000 plus 10.50 for each additional 1,000 or fraction thereof, to and including 50,000
$50,001 to $100,000	675.50 for the first 50,000 plus 7.50 for each additional 1,000 or fraction thereof to and including 100,000
$100,000 and up	1050.50 for first 100,000 plus 6.00 for each additional 1,000 or fraction thereof.
E. Other inspections and flat fee permits	
1. Inspections outside normal business hours (per hour; minimum charge – 2 hrs.)	72.00
2. Re-inspection fee	72.00
3. Inspection for which no fee is specifically indicated (per hour; minimum charge - one-half hour)	72.00
4. Special Inspection (when required by the Building Official)	72.00
5. Additional plan review required by changes, additions or revisions to approved plans (per hour; minimum charge – one-half hour)	72.00
6. Structure Moving permit	72.00
7. Inspection of building to be moved	same as Certificate of Compliance inspection
8. No Permit – Failure to obtain a permit before commencing work	fee equal to the building permit fee
9. Certificate of Compliance Inspection	
a. Building Ins. (structural & zoning)	72.00
b. Commercial Roofing	72.00
c. Foundation only	72.00
d. Existing wood stove	72.00
e. Electrical	72.00
f. Plumbing	72.00
g. Heating (mechanical)	72.00
10. Demolition Permit	
a. Simple Demolition (non-structural alterations)	63.00
b. Complex Demolition (structural or complete building demolition)	268.00
11. Re-roofing permits for residential structures up to four units (commercial re-roofs require full building permit).	65.50

12. Residing permit (residential up to four units, commercial requires full building permit)	65.50
13. Residential Window & Exterior and Fire Door Installations (residential up to four units, commercial projects require full building permit)	65.50
14. Installation Permits for Mobile/Manufactured Homes and Prefabricated Storage Buildings 300 square feet or less with Manufacturer's Structural Plans (for installations not involving permanent foundations. Additional fees may apply for foundation permits.)	65.50
15. Certificate of Occupancy – Existing Commercial Buildings (includes life safety inspections)	72.00
16. Installation Permit for Mobile / Manufactured Homes when that installation includes electrical and plumbing. No additional electrical or plumbing permits required.	184.00
Plumbing Permit Fees	
A. Permit issuance fee (charged with all permits except flat fee and commercial and institutional permits)	30.00
B. Plumbing residential permit – per dwelling unit (single family and two family only)	21.50 plus 10.00 per plumbing fixture
C. Plumbing appliance installation (water heaters and boilers)	21.50
D. Commercial (includes multi-family dwellings, fraternities and sororities) Fee based on contract price:	
1. 0 - $2,000 Contract Price	30.00 plus 4% contract price up to 2,000
2. $2,000 - $10,000 Contract Price	110.00 plus 3% of contract price over 2,000
3. $10,000 - $100,000 Contract Price	350.00 plus 2% of contract price over 10,000
4. Over $100,000 Contract Price	2,150 plus 1% of contract price over 100,000
E. Additional fees: in addition to aforementioned permit fee and residential or commercial/industrial fees, the following charges will be made:	
1. Each lawn sprinkler system backflow device	14.25
2. Vacuum breakers or backflow	14.25
3. For each gray water system	72.00
4. Fire sprinkler inspection and plan review	130.00 plus 2.00 per sprinkler head
Electrical Permit Fees	
A. Permit issuance fee (charged with all permits except flat fee and commercial and institutional permits)	30.00
B. Temporary service	21.50
C. New Residential Electrical Permit - per dwelling unit (single family and two family only)	
1. New Dwelling unit electrical service and wiring	0.122 /sq. ft.
2. Electric Furnaces and unit space heaters (per appliance)	6.00
D. Alterations and Others	
1. Electrical Service Change Out	67.00
2. Extension or addition of up to six (6) circuits	44.00

3. Extension or addition of more than six (6) circuits	67.00
4. Electric Furnaces, Heat Pump, Air Conditioners, Unit Space Heaters and Ventilation Fans (per appliance)	8.00
5. Domestic Water Pumps	33.00
E. Commercial (includes multi-family dwellings, fraternities and sororities, and distribution wiring and pedestals for mobile parks). Fee based on contract price:	
1. $0 – $2,000 contract price	30.00 plus 4% of contract price up to 2,000
2. $2,000 - $10,000 contract price	110.00 plus 3% of contract price over 2,000
3. $10,000 - $100,000 contract price	350.00 plus 2% of contract price over 10,000
4. Over $100,000 contract price	2,150 plus 1% of contract price over 100,000
Gas/Mechanical Permit Fees	
A. Gas/Mechanical Permits	
1. Permit Issuance Fee (charged with all permits except flat fee and commercial permits)	30.00
2. Residential install of gas fueled furnace, water heater, boiler, fireplace, unit or space heater, per appliance by the BTU as follows:	
a. 0 – 180 thousand BTU	36.00
b. 181 thousand BTU and above	45.00
3. Gas Piping – Fixture or appliance outlets (per outlet)	9.75
4. Wood/Pellet Stoves	21.50
5. Air handlers, for each air-handling unit, including ducts attached thereto	18.75
6. Commercial (includes multi-family dwellings, fraternities and sororities) Fee based on contract price:	
a. $0 - $2,000 Contract Price	30.00 plus 4% of contract price up to 2,000
b. $2,000 - $10,000 Contract Price	110.00 plus 3% of contract price over 2,001
c. $10,000 - $100,000 Contract Price	350.00 plus 2% of contract price over 10,000
d. Over $100,000 Contract Price	2,150 plus 1% of contract price over 100,000
7. Installation, relocation or replacement of each appliance vent installed and not included in an appliance permit.	12.00
8. Repair of, alteration of, or addition to each heating appliance, refrigeration unit, cooling unit, or similar system, including installation of controls regulated by this Code.	24.50
9. For each ventilation fan connected to a single duct	12.00
ENGINEERING SERVICES	
A. Engineering public improvement plan review (2 submittals)	135.00 plus 39.50 per plan sheet
B. Engineering extended plan review (3rd submittal and beyond) for: Multi-Family and Commercial Site Plan Reviews Parking Lot Development or Modification Reviews	63.00 / hour

Public Improvements Plan Reviews Other Miscellaneous Plan Reviews	
C. Engineering grading plan review including erosion control agreement	142.00 each
D. Grading Permit Security Deposit	3% of estimated total cost of grading and excavation
E. Engineering telecommunication review – on City facilities only	1,950.00 each
F. Engineering review of revisions or modification to existing telecommunications facilities on City facility	230.00
G. Engineering development agreements including legal review	285.00
H. Engineering monumentation agreements including legal review	131.25
I. Engineering inspection (subdivision, PUD, commercial, and multi-family residential)	1.25% of public improvements construction cost as verified by City
J. Engineering "as-constructed" plan preparation	285.00 plus 39.00 per plan sheet
K. Engineering easement document review/preparation	80.00
L. Highway right-of-way use permits through Idaho Transportation Department	115.00 each
M. Right of Way encroachment agreements – administrative	78.00 each
N. Right of Way encroachment agreements – council action	141.50 each
O. Engineering variance – Council Action	141.50
P. Right-of-Way Vacation Request (Includes publication and registered mailings)	720.00
Q. Address Change Fee	27.00
R. No Permit – Non-Compliance Review Fee (one-hour minimum)	72.00 / hour
Engineering Publications and Printing	
A. Maps	
1. 8 ½ x 11 City Limit	1.00
2. 11 x 17 City Limit	1.00
3. 22 x 30 City Limit	1.50
4. 22 x 30 Zoning Map	1.50
5. Address, City Limit, Area of City Impact, Comprehensive Plan, Zone, L.I.D., Plat, Street Numbers, Water, Storm, Sanitary, Road, Street and other miscellaneous maps	5.00
6. Digital Contours (per tile)	125.00
B. Printing and Copies	
1. Copier	
a. 8 ½ x 11	0.10
b. 8 ½ x 14	0.25
c. 11 x 17	0.50
d. 18 x 24	1.00
e. 24 x 36	2.00
f. 24" Roll	1.00/foot
g. 36" Roll	1.25/foot
2. Digital Copies	
a. Standard Drawings	5.00/page
b. Construction Drawings	1.00/page

3. Plotter	
a. Prints	
i. 8 ½ x 11	2.00
ii. 11 x 17	2.50
iii. 18 x 24	3.00
iv. 24 x 36	5.00
v. 24” Roll	2.00/foot
vi. 30” Roll	2.50/foot
vii. 36” Roll	3.00/foot
viii. 36” Color	4.00/foot
ix. 42” Roll	4.50/foot
x. 42” Color	5.00/foot
xi. Plot Set up Fee (per additional layer)	5.00
b. Orthophotos	
i. 8 ½ x 11	3.00
ii. 11 x 17	4.00
iii. 18 x 24	5.00
iv. 24 x 36	10.00
v. 24” Roll	5.00/foot
vi. 30” Roll	6.00/foot
vii. 36” Roll	7.50/foot
viii. 42” Color	9.00/foot
ix. Plot Set up Fee (per additional layer)	5.00
C. Documents	
1. Comprehensive Water System Plan (free on website)	35.00
2. Comprehensive Sewer System Plan (free on website)	35.00
3. Multimodal Transportation Plan (free on website)	35.00
4. Standard Drawings (free on website)	5.00
5. Construction Specifications (free on website)	5.00
Sewer Permit Fees and Charges	
A. Permit Fee	40.00
B. No Permit – Noncompliance Review Fee (one-hour minimum)	60.00/hour
C. Sewer Tapping Fee (The customer will provide the excavation required to expose the main, pump out ground water, shore or slope hole as needed, provide traffic control as needed, fill/compact, and make temporary street patch as needed.)	190.00
D. SE Moscow Water and Sewer District Tapping Fee Surcharge (Properties Outside City Limits)	5.00
E. General Facilities Charge - Equivalent Plumbing Fixture Unit (PFU) (25 PFU = Equivalent Residential Unit (ERU))	107.32
F. Orchard Avenue Sewer Connection Surcharge – only for addresses above 1400 and streets north of Ponderosa	1,400.00
G. Sewer Service inspections	75.00
H. Video Inspection of Public Sewer Main Construction	97.50 /hour

I. SE Moscow Water and Sewer District Inspection Fee Surcharge (Properties Outside City Limits)	5.00
J. Sewer Service Disconnection	45.00
K. Commercial Portable Waste Discharge at the Wastewater Treatment Plant	
1. Load up to 300 gallons	22.01
2. Each subsequent gallon	0.30
Monthly Sewer Service Rates	
A. Residential Service	
1. Single family and duplexes or other multiple units served by separate meters.	54.73
2. Trailer homes (per unit) defined as multiple units served by a common meter (like a mobile home park)	40.24
3. Multi-family dwellings including duplexes (per unit) defined as multiple units served by a common water meter.	40.24
B. Commercial Users	
1. Commercial – Low For commercial users with combined Biochemical Oxygen Demand / Total Suspended Solids (BOD/TSS) of 0-200 mg/L	75.19 plus 5.67 per 100 cubic feet metered water
2. Commercial – Medium For commercial users with combined BOD/TSS of 201-400 mg/L	75.19 plus 7.85 per 100 cubic feet metered water
3. Commercial – High For Commercial Users with combined BOD/TSS of 401+ mg/L	75.19 plus 9.63 per 100 cubic feet metered water
** These strength-based categories are based on user type contribution of combined Biochemical Oxygen Demand/Total Suspended Solids (BOD/TSS). Users are placed in the applicable category using California State Water Resource Board standards that correspond with the activities undertaken in each establishment based on their response to a City of Moscow Commercial User Survey.*	
4. Small Commercial Office with Irrigation Limited to Commercial – Low users with exterior irrigation and an average monthly winter water use of less than 700 cubic feet per month.	75.19 plus use rate for 200 cubic feet (11.34)
** For the purpose of determining the monthly sewer rates based on the volume of metered water, metered water will be averaged periodically using meter readings of winter water use period so the irrigation period may be excluded.*	
C. Mixed Use Service – Defined as different sewer customers listed in this section of the fee resolution that are served by a single water meter. For existing mixed-use customers, a weighted model will be used to estimate the contribution based on metered water use. The estimated contribution of each customer served by the meter will be charged as a percentage of the total monthly use at the associated non-residential rate. Future mixed-use accounts will be assessed at the highest contribution rate for all metered water consumption.	75.19
D. University of Idaho (Annual Charge)	1,268,200.00
E. SE Moscow Water and Sewer District Sewer Service Surcharge (outside City limits)	3.00

Water Permit Fees and Charges	
A. Permit Fee	42.00
B. No Permit – Noncompliance Review Fee (one hour minimum)	60.00/hour
C. Water Service Inspection	78.75
D. Installation of service and meters (No existing service line to property line)	
1. 5/8" meter	3,594.00
2. 1" meter	3,986.00
3. 1 1/2" meter	4,597.00
4. 2" meter	4,939.00
5. Other meters	at cost
E. Installation of service and meters (Existing service line to property line).	
1. 5/8” meter	1,630.00
2. 1” meter	1,712.00
3. 1 1/2” meter	2,910.00
4. 2” meter	3,434.00
5. Other meters	at cost
F. Other fees	
1. Tap	
a. Fire line or other (3" and larger diameter); customer provides the street cut, excavation to expose the main, water removal, traffic control, backfill, temporary (cold mix) street patch, tapping sleeve, gate valve and valve box. Includes up to 45 s.f. not mix patch by City. Additional patch at $2.65 per s.f.	1,186.50 min
b. Fire line or other (2" or smaller); Customer provides a corporation elbow and curb stop rather than sleeve and gate valve provided by customer in 'a' above. Customer is to provide all other work as outlined in 'a' above.	735.00 min
2. Relocation of meters – Limited to same property	
a. No new tap of main	
i. 5/8” to 1”	304.50
ii. 1 ½” to 2”	341.30
b. New tap of main	
i. No street cut	
a) 5/8” meter	2,656.50
b) 1” meter	2,672.25
c) 1 ½” meter	2,703.75
d) 2” meter	2,730.00
ii. Street cut	
a) 5/8” meter	3,727.50
b) 1” meter	3,748.50
c) 1 ½” meter	3,780.00
d) 2” meter	3,811.50
3. Meter Box Adjustments	
a. Vertical Adjustment (± 12”)	245.00
b. Horizontal Adjustment	at cost

4. Resetter Installation	
a. 5/8” – 2” meter	at cost
5. Water Service Disconnection (abandonment)	
a. With Street Cut	798.00
b. Without Street Cut	546.00
6. Turn on - turn off after regular working hours	70.29
7. Labor and materials to repair damage to water distribution system.	at cost
8. Labor and materials to repair meter boxes damaged by neglect or careless operation of motor vehicles.	at cost
G. General Facilities Charge	
1. 5/8 x 3/4" meter (20 gal/min; meter equiv – 1.0)	2,732.00
2. 1" meter (50 gal/min; meter equiv – 2.5)	6,830.00
3. 1 1/2" meter (100 gal/min; meter equiv – 5.0)	13,660.00
4. 2" meter (160 gal/min; meter equiv – 8.0)	21,856.00
5. Larger than 2"	by special contract with City
H. Orchard Avenue Water Connection Surcharge – only for addresses above 1400 and streets north of Ponderosa	1400.00
I. Disinfection	
1. First test	511.00
2. Second test (pigging of line may be required)	505.00
3. Third or more test (pigging of line may be required)	656.00
J. Bacterial Testing [at the discretion of the City]	
1. Samples (per each)	50.00
2. Saturday Samples (per each)	145.00
3. After hours and Saturday Sampling Labor	70.29
K. Pressure testing fees	
1. Tests performed by City	
i. First Test	882.00
ii. Second Test	1,102.00
iii. Third or more test	1,323.00 / test
Water Service Rates	
A. Standard Monthly Rates	
1. Fixed charge	
a. Single family residential/Duplex/Tri-plex per meter (Definition is a single meter servicing each dwelling unit)	39.81
b. Multi-family (definition is a meter servicing more than one dwelling unit.) based on meter size	
➢ 5/8 Inch	39.81

➢ 1 Inch	49.79
➢ 1 ½ Inch	99.32
➢ 2 Inch	158.93
➢ 3 Inch	298.04
c. Commercial Accounts based on meter size	
➢ 5/8 Inch	39.81
➢ 1 Inch	49.79
➢ 1 ½ Inch	99.32
➢ 2 Inch	158.93
➢ 3 Inch	298.04
➢ 4 Inch	502.20
d. High fire demand	71.90
2. Consumption Charge for Residential/Duplex or Triplex (Definition serviced by a single meter per dwelling unit)	
a. 0-700 per cubic feet	2.96 /ccf
b. 701-2000 per cubic feet	3.51 /ccf
c. Over 2000 cubic feet	5.95 /ccf
3. All Usage Consumption Charge for Multi-Family or Commercial Accounts (one meter serving multiple units)	3.89 /ccf
4. Rate for Moscow Cemetery	3.31 /ccf
B. Water and Sewer rate charge for water and sewer furnished outside the boundaries of the City.	200% of the minimum service charge and water rate charge
C. Bulk water usage.	
1. Construction or portable bulk water meter with backflow assembly	110.00
2. Construction or portable bulk water equipment rental fee	25.00/month
3. Bulk water rate per 1,000 gallons	7.60
4. Bulk water equipment repairs	at cost
STREET / STORM DEPARTMENT	
A. Stormwater User Fee per Equivalent Service Unit (ESU)	
1. Standard User fee per ESU	7.92
2. Direct Discharger per ESU	1.58
3. MS4 Owner/Operator per ESU	6.34
4. K-12 Educational Activities per ESU	6.34
B. Large banner installation and removal	150.00/banner
C. Small banner installation and removal	45.00/banner
D. Information sign installation	120.00 plus cost of sign

E. Street Cut Damage Recovery Fee: Fee based on Overall Condition Index (OCI) rating of street in accordance with most recent street condition survey: OCI 81-100 61-80 41-60 21-40 0-20			 800.00 600.00 400.00 200.00 0
F. Right of Way Excavation Permit			35.00 (plus 100.00 Idaho Transportation Department permitting, if applicable)
G. Right of Way Excavation Security Deposit Rate Schedule			
Total Valuation of Work in Right of Way			
$100 to $500			245.00
$501 to $1,000			367.50
$1,001 to $1,500			490.00
$1,501 to $2,000			615.00
$2,001 to $2,500			735.00
$2,501 to $3,000			860.00
$3,001 to $3,500			980.00
$3,501 to $4,000			1,100.00
$4,001 to $4,500			1,230.00
Greater than $4,500			1,850.00
Multiple Projects (up to four (4) active projects)			3,675.00
H. Public Lighting Costs – per month – per Utility Service			
1. Residential Units			3.10
2. Commercial Units			8.05
I. City Barricades for Private Projects (applicable only when the City supplies devices on an emergency or prearranged basis for securing construction sites or other traffic revisions – standard traffic control operations shall not be eligible for device rental) (Limited availability) (Maximum 10 devices per project)	Day	Week	Month
1. Construction Sign	9.60	36.00	108.00
2. Construction Sign with Tripod	20.40	76.80	152.00
3. Hi-Level Sign Stand	3.60	10.80	31.00
4. Type II Barricade	8.40	31.20	92.00
5. Type III Barricade	32.40	127.20	379.00
6. Construction Drum	12.00	46.80	132.00
7. Tubular Markers	4.80	15.60	44.00
8. 28” Orange Traffic Cones	1.20	4.80	12.00
9. Type A, B, C Warning Lights	2.40	6.00	16.00

10. Set-up	62.00
11. Removal	62.00
J. Traffic Control (Setup / Devices) for On-Street Events Main Street Closures between A Street and 6th Street	
1. Recommended – 3rd Street to 5th Street	
Daytime	88.00
Nighttime	136.00
2. Full Closure – A Street to 6th Street	
Daytime	192.00
Nighttime	420.00
3. Partial Closures/Number of Blocks	
a. One Block	
Daytime	88.00
Nighttime	136.00
b. Two Blocks	
Daytime	94.00
Nighttime	147.00
c. Three Blocks	
Daytime	99.00
Nighttime	158.00
d. Four Blocks	
Daytime	105.00
Nighttime	169.00
4. Other Street Closures (per block)	
Daytime	88.00
Nighttime	136.00
K. Crowd Control Barriers	
1. Barrier Rental Fee (per barrier, per event)	2.00
2. Replacement Cost (if damaged or lost)	110.00
L. Traffic Control (Setup / Devices) for Parades	
1. Main Street – Minor Route	330.00
2. Other Routes and Locations	time and materials
M. Traffic Control (Setup / Devices) for Block Parties One Block Standard Set-up	92.00
FINANCE	
A. Turn off and turn on for non-payment first occurrence.	30.00
B. Turn off and turn on for non-payment repeat occurrences in 12 months.	60.00
C. Accounts Receivable Billing Late Fee Penalty	
1. Notice of delinquency (occurs 46 days after billing)	15.00 or 5% whichever is greater
D. Deposits – Utility	
1. Residential	125.00
2. Commercial	175.00
E. NSF (Non-sufficient funds) Returned Check Charge Fees	25.00/check

F. Convenience Fee	2.5% for credit/debit card (2.00 minimum) 1.00 for electronic ACH
BUSINESS REGULATION FEES	
A. Circuses	
1. Circus or Tent show, First Class (2,000 or more people at one time)	260.00
2. Circus, or Tent show, Second Class (not to exceed 2,000 people at one time)	180.00
3. Merry go-rounds or mechanical rides – per ride	15.00
4. Amusement and other concessions – per exhibition	5.00
B. Peddlers, Solicitors and Canvassers Registration (per applicant)	
1. New Peddlers, Solicitors and Canvassers Registration	60.00
2. Peddlers, Solicitors and Canvassers Registration Renewal (without fingerprints)	35.00
3. Peddlers, Solicitors Registration Renewal (with fingerprints)	60.00
C. Vendor	
1. New Vendor License	60.00
2. Vendor License Renewal (without fingerprints)	35.00
3. Vendor License Renewal (with fingerprints)	60.00
4. New Mobile Vending Unit Inspection	66.50
5. Mobile Vending Unit Renewal Inspection	30.00
6. Sidewalk Vending Unit Inspection (new and renewal)	no fee
D. Second Hand/Pawn Dealers	
1. New Second Hand/Pawn Dealer License	60.00
2. Second Hand/Pawn Dealer Renewal (without fingerprints)	35.00
3. Second Hand/Pawn Dealer Renewal (with fingerprints)	60.00
E. Taxicabs, Pedicab, and Carriage	
1. Taxicab, Pedicab, and Carriage Owner License/Renewal (each vehicle)	15.00
2. New Taxicab, Pedicab, and Carriage Operator License	60.00
3. Taxicab, Pedicab, and Carriage Operator License Renewal (without fingerprints)	35.00
4. Taxicab, Pedicab, and Carriage Operator License Renewal (with fingerprints)	60.00
F. Sidewalk Café License	
1. New Sidewalk Café License	25.00
2. Sidewalk Café License Renewal License	25.00
3. New Sidewalk Café License Inspection	125.00

(if applied for concurrently with new alcohol application, inspection fee may be waived)	
4. Sidewalk Café License Renewal Inspection *(if alcohol is served in café area, inspection fee is included in alcohol license renewal)*	30.00
G. Alcohol Licensing	
1. Beer License *	
a. Draught, bottled and/or canned beer with consumption on premise	200.00
b. Bottled and/or canned beer with no consumption on premise	50.00
c. Transfer fee (not eligible for prorate)	50.00
2. Liquor License *	
a. Annual fee (includes wine on-premise)	562.50
b. Transfer fee (includes wine on-premise)	562.50
3. Wine License *	
a. Wine combined with on and off premise consumption	200.00
b. Wine with on premise consumption only	150.00
c. Wine with off premise consumption only	150.00
d. Transfer fee (not eligible for prorate)	50.00
**With the exception of license transfers, all licenses issued for a portion of a year shall be prorated as of the month of actual issue; provided that no fee shall be less than one half of the total fee herein set forth.*	
4. Inspection fee (not eligible for prorate) *To cover cost of required inspection by Fire Department and Community Planning and Design. This fee must be paid before any inspections are scheduled. If license application is withdrawn the fee will be forfeited to the city. If a building permit is required for any construction or remodeling, the inspection fee will be waived.*	
a. New beer, wine and/or liquor license	125.00
b. Renewal of beer, wine, and/or liquor license	30.00
5. Restaurant Certification (required to permit admittance to individuals under the age of 21)	no fee
6. Alcohol Catering Permit Fee (set by State Code)	20.00
H. Appeal from denial, suspension, or revocation of a business regulation license, permit, waiver, etc. (unless otherwise specifically set out herein)	55.00
I. Shared Mobility Operator Fees (as defined by City Code)	
1. Annual License Fee	2,500.00
2. Annual Device Fee	100.00/device
3. Device Security Deposit (one-time)	20.00/device
4. Impound Fee (per day)	25.00/device
J. Personal Delivery Devices Annual License Fee	250.00
Child Care License	
A. Family Day Care Facility Registration (includes administration, fire inspection and background check for one day care provider)	80.00
B. New Facility Application Fee (includes administration, inspections by Code Enforcement, Fire Department, and Health Dept.)	

1. Family Day Care Facility (1-5 children)	75.00
2. Group Day Care Facility (6-12 children)	100.00
3. Small Day Care Facility (13-20 children)	125.00
4. Large Day Care Facility (21+ children)	150.00
C. New Employee/Provider Application Fee	30.00
D. Facility License Annual Renewal Application Fee	
1. Family Day Care Facility (1-5 children)	50.00
2. Group Day Care Facility (6-12 children)	75.00
3. Small Day Care Facility (13-20 children)	100.00
4. Large Day Care Facility (21+ children)	125.00
E. Employee/Provider License Annual Renewal Application Fee	10.00
See Miscellaneous for Background Check Fees	
F. Code Compliance Enforcement to be Billed to Day Care Facility	
1. First and Second Communication	no charge
2. Third Communication	25.00
3. Fourth Communication	40.00
4. Fifth and each subsequent Communication	60.00
5. Tardy Renewal Applications (Facility and Provider)	10.00
G. Change of Ownership	15.00 plus other inspection fees as deemed appropriate.
H. Change of Premises	15.00 plus other inspection fees as deemed appropriate.
Bicycle License Lifetime Ownership Tag	7.00
Burglary and Robbery Alarms – False Alarms (for each occurrence)	50.00
Dog Licensing and Related Fees	
A. Lifetime registration tag	
1. Unaltered	35.00
2. Altered	25.00
B. Duplicate tag	5.75
C. Adoption (out)	
1. Altered	15.00
2. Unaltered	27.50
D. Adoption (placing own animal in)	20.00
E. Euthanasia	100.00
F. Boarding - per day or part thereof	20.00
G. Impound	

1. First time	20.00
2. Second time	30.00
3. Third time	40.00
4. Fourth and each subsequent time	60.00
H. Surcharge Fee	
1. Unaltered	30.00
2. Altered	20.00
Miscellaneous Fees	
A. Accident Reports (see G. Copies of official records…)	
B. Background Checks	
1. City of Moscow Police Department – Name Check	20.00
2. Idaho State Police – Fingerprints	42.00
3. Idaho State Police - Name Check	20.00
4. Health and Welfare Statewide Child Abuse Registry Check	20.00
C. City Code (Free on website)	
1. Initial cost	260.00
2. Annual charge for updating	52.00
3. Zoning Code	20.00
D. Copies of official records or documents	
1. Police files – per page (no charge for first 100 pages)	0.10
2. Other City documents – per page (no charge for first 100 pages)	0.10
3. Audio or video tape copy	amount allowed by Idaho Code Section 74-102(10)
4. Audio or video CD copy	amount allowed by Idaho Code Section 74-102(10)
5. Where a request for public records of the City of Moscow is for more than one hundred (100) pages of paper records; or the request includes records from which non-public information must be separated, deleted, and/or redacted; or where actual labor associated with responding to a request for public records exceeds two (2) person hours, the requestor shall be charged the copy and/or labor costs allowed by Idaho Code Section 74-102(10) unless the requestor demonstrates an exemption pursuant to Idaho Code Section 74-102(10)(f), as determined by the City Clerk.	amount allowed by Idaho Code Section 74-102(10)
6. The Clerk or designee may require advance payment of the cost authorized pursuant to Idaho Code Section 74-102(12). Any money received by the City shall be credited to the account for which the expense being reimbursed was or will be charged.	
E. Criminal History Letters (letters typed on letterhead stationery indicating the absence of a criminal history in this department. Exclude police records checks requested by federal, state or local government agencies)	30.00
F. Parking Space Permits	
1. Downtown (City Hall, Jackson and Jefferson Street Lots)	
a. Per month	52.00
b. Per quarter	130.00
c. Annual	370.00

2. Magenta (West Park School / Ghormley Lot)	
a. Per month	15.00
3. Construction uses in right-of-way	
a. Per day	42.00
A. E-911 Monthly Service Fee	1.00
B. Escort Services / Special Event Security	
1. Sunday through Saturday (Non-holiday) (per officer) (two hour minimum)	75.00
2. Holiday (per officer) (two hour minimum)	130.00
Escort services, traffic direction and any special event requiring police services including, but not limited to, parades, house moving and other events where advance police assistance or supervision is requested or required.	
C. Fire Nuisance Alarms	
1. 1st Nuisance Alarm within 12 months	no charge
2. 2nd Nuisance Alarm within 12 months	no charge
3. 3rd Nuisance Alarm within 12 months	25.00
4. 4th Nuisance Alarm within 12 months	50.00
5. 5 or More Nuisance Alarms within 12 months	100.00 each occurrence
D. Fingerprinting – Any fingerprinting requested by a person or a company, but excluding fingerprinting related to criminal or other city matters.	20.00
E. General City Code Infraction (unless otherwise specified herein or established by State Code)	72.00
F. Nuisance Abatement	200.00 plus removal at cost
G. Parking Violations	
1. 5 Minute Parking Zone	25.00
2. No Parking 3 a.m. - 6 a.m. (City and campus)	25.00
3. No Parking Residential District	25.00
4. Double Parking	25.00
5. Parking in alley, on sidewalk, blocking driveway	25.00
6. Parking in School Bus Zone	25.00
7. Loading Zone Business & Campus Area	25.00
8. Commercial Zones (3 hr. limitation)	25.00
9. Parking Unattended, Motor Running	25.00
10. Parking in Fire Lane, Street & Off-street	40.00
11. Parking within 15 feet of Fire Hydrant	40.00
12. Parking behind Fire Station	25.00
13. Parking in front of Fire Station	40.00
14. Parking obstructing traffic	25.00
15. Improper Parking, other than listed	25.00
16. Parking citations not paid within fifteen (15) calendar day period	late fee 10.00
17. MCC 11-4-12 Prohibited parking trucks/similar vehicles	25.00
18. MCC 11-4-13 Handicapped parking	100.00
19. Parking Boot Removal (per incidence)	100.00

H. Public Hearing Mailing List	25.00
I. Smoking in Restricted Area Fine	10.00
1. First Offense (if paid within fourteen [14] days of notice of violation)	10.00
2. Second Offense (if paid within fourteen [14] days of notice of violation)	25.00
3. A First or Second Offense not paid within fourteen (14) days of notice of violation or a Third Offense	50.00
Towing and Storage Fees on Illegally Parked Vehicles	
A. Towing charged by the commercial towing service	actual cost
B. Storage of three-quarter (3/4) ton size pickups and smaller vehicles - per day	15.00
C. Storage of vehicles larger than three-quarter (3/4) ton pickups - per day	20.00
D. Vehicle Inventory Fee	11.00
City Programs and Other Services	
A. Van Pool (to cover costs only)	not to exceed 130.00/month
B. Van Pool Conference Commuter Service	Federal mileage reimbursement rate based on miles traveled
C. Information Systems – Fiber Optic Lease Rate Per Month	0.064 strand/ft. 0.066 strand/ft. (effective 1/1/23)
D. Information Systems – Rack Space Lease	42.77 month/1u 44.05 per 1u (effective 1/1/23)
Community Forestry	
Subdivision Development Tree Fee	250.00/tree
Parks and Recreation	
A. City Park Picnic Shelter East City Park Stage Rental Additional Picnic Table Move-In Per Trailer Load of Four (4) Tables	25.00 each shelter 20.00
B. Tree Service Contractor License	25.00
C. Recycling Deposit Fees (attendance of more than fifty [50] participants)	50.00
D. Park Shelter Reservations 4-hour blocks of time	25.00
E. Extra tables brought in for park rentals, per 4 tables	20.00
F. Crop Harvest Fee – West Palouse River Drive Property	70.00/acre
Hamilton Indoor Recreation Center	
A. Rental of Full Gym per Hour – court use only w/no set up required	70.00
B. Rental of Half of Gym per Hour – court use only w/no set up required	43.00
C. Rental of Full gym – requiring set up of tarp.	32.00
D. Rental of Multipurpose Room per Hour – Group I (City business)	no charge
E. Rental of Multipurpose Room – Group II per hour (Non-profit groups, service clubs)	32.00
F. Rental of multipurpose Room – Group III per hour, (Private parties, wedding receptions, commercial, for-profit organizations)	80.00
G. Rental of Multipurpose Room – Group IV per hour (Other Governmental Organizations)	43.00
H. Rental of Sound System per rental	10.00

Hamilton-Lowe Aquatic Center	
A. Pool Passes	
1. Season Adult, Non-Resident	121.00
2. Season Adult, Resident	108.00
3. Season Child (4-17 years old) Non-Resident	108.00
4. Season Child (4-17 years old) Resident	91.00
5. Season Senior (65+ years old) Non-Resident	108.00
6. Season Senior (65+ years old) Resident	91.00
7. Season Household (up to five (5) family members; flat $15.30 each additional member) Non-Resident	211.00 five family members 15.30 each additional member
8. Season Household (up to five (5) family members; flat $ 12.75 each additional member) Resident	176.00 five family members 12.75 each additional member
9. ID Card Replacement Fee	5.00
B. Daily Admission Prices	
1. Children (3 years old and under)	FREE
2. Children (4-17 years old)	5.42
3. Adults (18-64 years old)	7.31
4. Seniors (65 + years old)	5.50
5. Child Coupon Sales	5.50
C. Private Event Rentals	
1. Option 1: Up to 150 patrons	375.00/hour
2. Option 2: 151 to 300 patrons	445.00/hour
3. Option 3: 300 + patrons	600.00
D. Private Event Rentals: Fun Run Inflatable	190.00/rental
E. Aquatic Center Picnic Table Rental, per hour, per table	7.75
F. Swim team rentals	6.35/lane
G. Locker rentals	0.50
H. Bathroom Personals	0.25
I. American Red Cross (ARC) Swim Lessons, All levels	43.50
J. Swim Lessons, Adaptive	43.50
K. ARC Guardstart	58.00
L. ARC Lifeguard Training	136.50
M. ARC Lifeguard Instructor	136.50
N. ARC Water Safety Instructor	136.50
O. Aquacize & Water Class – Season Pass	70.00
P. Aquacize & Water Class – 10-punch Pass	45.00
Q. Aquacize & Water Class – Drop-in	8.00
R. Customized Swim Lessons	
1. 1 student / per hour	45.00
2. 2 students / per hour	54.00
3. 3 students / per hour	60.00
Youth Sports	**Resident (Res) / Non-Resident (Non-Res)**
A. Micro Soccer U5 – U7 Early Bird (Spring and Fall)	Res 36.50 / Non-Res 37.50
B. Micro Soccer U5 – U7 (Spring and Fall)	Res 41.50 / Non-Res 42.50
C. Micro Soccer U8 – U12 Early Bird (Spring and Fall)	Res 42.50 / Non-Res 43.50
D. Micro Soccer U8 – U12 (Spring and Fall)	Res 47.50 / Non-Res 48.50

E. Flag Football Early Bird	Res 45.00 / Non-Res 46.00
F. Flag Football	Res 50.00 / Non-Res 51.00
G. Youth Volleyball Early Bird – Grades 4th – 6th (Fall)	Res 36.00 / Non-Res 37.00
H. Youth Volleyball – Grades 4th – 6th (Fall)	Res 41.00 / Non-Res 42.00
I. Youth Basketball Early Bird – Grades K – 3rd (Winter)	Res 41.00 / Non-Res 42.00
J. Youth Basketball – Grades K – 3rd (Winter)	Res 47.00 / Non-Res 48.00
K. Youth Basketball Early Bird – Grades 4th – 5th (Fall)	Res 41.00 / Non-Res 42.00
L. Youth Basketball – Grades 4th – 5th (Fall)	Res 47.00 / Non-Res 48.00
M. Junior Fast Pitch Early Bird – Grades 3rd – 5th	Res 62.00 / Non-Res 63.00
N. Junior Fast Pitch – Grades 3rd – 5th	Res 67.00 / Non-Res 68.00
O. Senior Fast Pitch Early Bird – Grades 6th – 8th	Res 62.00 / Non-Res 63.00
P. Senior Fast Pitch – Grades 6th – 8th	Res 67.00 / Non-Res 68.00
Q. Youth T-Ball / Coach Pitch Early Bird	Res 38.50 / Non-Res 39.50
R. Youth T-Ball / Coach Pitch	Res 43.50 / Non-Res 44.50
S. Skyhawks Youth Camps	
1. Soccer / Swim	129.00
2. Tennis	115.00
3. Basketball	129.00
4. Tiny Hawk Soccer	65.00
5. Multi-sport	129.00
6. Mini Hawk	115.00
7. Soccer	115.00
8. Flag Football / Swim (Monday – Friday)	119.00
9. Flag Football (Monday, Tuesday, Wednesday)	99.00
T. Mini Junior / Junior Golf Lessons	Res 67.00 / Non-Res 68.00
U. Youth Shirts	17.00
V. Youth Karate	Res 48.00 / Non-Res 49.00
Adult Sports	**Resident (Res) / Non-Resident(Non-Res)**
A. Volleyball Fall & Winter (Co-Rec)	248.00
B. Basketball (Moscow/Pullman League)	525.00
C. Co-Rec Softball, per team	475.00
D. Softball, per team	833.00
E. Horseshoes – Doubles and Singles	Res 6.50 / Non-Res 8.50
F. Adult Soccer, per team	475.00
G. Field Set-Up Fee for Private Use	20.00 per set up
General Recreation Programs	**Resident (Res) / Non-Resident(Non-Res)**
A. Salmon River Trips (two varieties of trips)	
1. Youth	Res 63.25 / Non-Res 64.25
2. Adult	Res 72.00 / Non-Res 74.00
B. Dog Obedience	
1. Kinderpuppy	Res 64.25 / Non-Res 66.25
2. Beginning Obedience	Res 64.25 / Non-Res 66.25
3. Advanced Obedience	Res 64.25 / Non-Res 66.25
4. Rally Obedience	Res 64.25 / Non-Res 66.25
C. Hunters' Education	Res 21.50 / Non-Res 22.50
D. Tone & Stretch	
1. Per Class	Res 3.50 / Non-Res 3.61

2. 10 class punch card 3. Drop In	49.00 6.25
E. Zumba Class	Res 60.00 / Non-Res 62.00
F. Zumba Punch Card	45.00
G. Zumba Walk-in	6.25
H. Open Life Drawing Studio	Res 10.75 / Non-Res 12.75
I. Hunting Spring Mushrooms	Res 42.75 / Non-Res 44.75
J. Hunting Fall Mushrooms	Res 42.75 / Non-Res 44.75
K. Beginning Birding	Res 10.00 / Non-Res 12.00
L. Athletic Performance Training	Res 100.00 / Non-Res 101.00
M. Beginning Sewing	Res 42.00 / Non-Res 43.00
N. Get Moving	Res 96.00 / Non-Res 97.00
O. Fall Tree Pruning	Res 17.00 / Non-Res 18.00
P. Trees of Idaho	Res 10.00 / Non-Res 12.00
Q. Trees in Your Neighborhood	Res 10.00 / Non-Res 12.00
R. Fruit Tree Pruning	Res 17.00 / Non-Res 19.00
S. Choosing and Planting New Street Trees	Res 17.00 / Non-Res 19.00
T. Firewise Principles and Practices	Res 5.00 / Non-Res 7.00
U. What's Wrong With My Tree?	Res 5.00 / Non-Res 7.00
V. Mah Jong Class	Res 35.00 / Non-Res 37.00
W. Green Cleaning	Res 10.00 / Non-Res 12.00
X. Naturally Clean Home	Res 10.00 / Non-Res 12.00
Y. Cornhole Challenge Early Bird	Res 10.00 / Non-Res 12.00
Z. Cornhole Challenge	Res 15.00 / Non-Res 17.00
AA. Mini Drone Challenge Early Bird	Res 10.00 / Non-Res 12.00
BB. Mini Drone Challenge	Res 15.00 / Non-Res 17.00
CC. Moscow Rolling Hills Half Marathon	Res 40.00 / Non-Res 50.00
DD. Community Garden Garden Plot Rental Clean-up Deposit	 53.00 each 25.00 each
Eggan Youth Center Activities	**Resident (Res) / Non-Resident(Non-Res)**
A. Youth Center Rentals, per hour	35.00
B. Kids Kamps, Per Each Activity Day	Res 22.00 / Non-Res 23.00
C. High Adventure Camp - Daily	Zip Line 120.00 Kayak / Horse 85.00
D. Breakfast with Santa and Candy Cane Hunt	Individual 7.50 / Family 26.00
E. Palouse Youth Triathlon / Sponsorships	17.50 / 500.00
F. Snow Ball	Individual 11.50 / Couple 28.00
G. Youth Enrichment Classes	44.75
H. After School Activities	10.00
I. Teen Night Out	Res 9.00 / Non-Res 10.00
J. Super Bowl Bash	Res 5.00 / Non-Res 6.00
K. Undetermined Programs	2,000.00
$1.00 / $2.00 (Child/Adult) non-resident fee is charged for programs in addition to the process listed above.	1.00 / 2.00

New recreational programs that do not appear in this fee resolution are often developed and implemented during the fiscal year.	varies per program
Fire Department	
A. Compressed Gases	30.00
B. Fireworks	30.00
C. Flammable or Combustible Liquids	30.00
D. Covered Malls	30.00
E. Tents, Canopies and Temporary Membrane Structures	30.00
F. Fire Code Inspections	30.00
SOLID WASTE	
Rates for Residential Units	
A. Roll Cart – Variable Size, Variable Rate System (monthly fee per roll cart collected weekly)	
35 Gallon	22.14 /month
65 Gallon	28.43 /month
95 Gallon	34.78 /month
35 Gallon On Demand – Base Fee	16.74 /month
35 Gallon On Demand – Per Service	2.10/each
Roll Cart Size Exchange (after initial 30 day period)	18.50 /each
Roll Cart Replacement (lost, stolen, damage from abuse)	57.89 /each
B. Penalty - for any garbage exceeding service level	6.60 per can/bag
C. Carry-out service Outside of building - additional per can, per unit, per month	12.17
D. Inside of building - additional per can, per unit, per month	13.80
E. Return service (blocked roll cart, roll cart not set out on time or otherwise not able to be serviced by Franchisee) per calendar year	
First Occurrence	0.00
Second Occurrence	13.80
Third and Following Occurrences	27.57
Residential units utilizing mechanical containers or compactors shall be billed at the business rate for such equipment.	
F. Apartment Single Stream Recycling Fee	5.05/unit, per month
Rates for Business Units and Commercial Cans	
A. Loose yardage on ground	34.07 /cubic yard
B. Extra service for dumpster/mechanical containers with 24-hour notice	36.17 /each dump plus tipping fee
C. Extra service for dumpsters/mechanical containers per yard.	16.70/cubic yard
D. Compactor Service Pick Up	232.61 /each pick up plus tipping fee
E. Small Compactor Yardage	85.17 /cubic yard
F. Commercial Roll Cart – Variable Size, Variable Rate System (monthly fee per roll cart collected weekly)	
35 gallon	19.99 /month
65 gallon	30.17 /month
95 gallon	40.26 /month
Roll Cart Size Exchange (after initial 60-day period)	18.50 /each
Roll Cart Replacement (lost, stolen, damage from abuse)	57.89 /each
G. Commercial Single Stream Recycling Fee	5.05/unit, per month
H. Additional Commercial Recycling Cart	5.05/unit, per month

Rates for Recycling Mobile Containers per month	(sales tax will be added)
A. Size: 6 Yard	59.16
B. Size: 10 1/2 Yard	90.37
C. Size: 12 Yard	110.68
Types of Services	
A. Franchisee Services/Value of Recycled Materials Retained by Franchisee: RMC hauled, emptied and exchanged by Franchisee.	48.10 /haul
B. Franchisee Services/Value of Recycled Materials retained by customer: RMC hauled, emptied and exchanged by Franchisee.	57.80 /haul
C. Customer Service/Value of Recycled Materials retained by customer: RMC hauled and exchanged by customer	0.00/haul
Rates for Dumpsters/Mechanical Containers per month	(Sales taxes will be added)

			Times per week				
Size / yd	Rental	Tax	1	2	3	4	5
1	12.79	0.77	67.74	139.47	210.55	267.50	336.04
2	14.58	0.87	133.99	271.51	412.18	563.04	724.02
3	26.92	1.62	197.59	403.51	616.53	845.77	1091.53
4	29.97	1.80	261.18	535.55	819.43	1119.78	1439.11
6	40.83	2.45	388.38	799.58	1225.24	1666.33	2130.65
8	50.72	3.04	515.62	1063.69	1637.64	2254.49	2894.94

Dumpster Locking Mechanisms	**3.50/month**
Producers who request that their mechanical containers be temporarily removed shall be charged for removal and re-delivery of the container.	45.50 /move
Rates for Solid Waste Processing Facility Access Service	
A. Transfer Station Tipping Fee (MSW)	97.80 /ton
B. Compost Materials	no charge
C. Clean Wood Waste	no charge
D. Inert/Demolition Materials Tipping Fee (NMSW)	39.90 /ton
E. Mixed Materials Tipping Fee (combination MSW/NMSW)	69.00 /ton
F. Minimum Fee – MSW, NMSW or Mixed – includes 200 lbs MSW or 460 lbs NMSW or 280 lbs Mixed	10.00/trip
G. Large Appliances	6.90/each
H. Appliances that do not have the Chlorofluorocarbon removed, and do not have a certified removal sticker	25.55/appliance
I. Vehicle Bodies	43.35/each
J. Tires	213.15 /ton
K. Asbestos	167.50/ton
The foregoing rates are not all-inclusive. The City may establish and/or change rates for unique or special waste.	
Special Hauls	
A. Pickup truck when requested by customer from landfill to City	83.40 plus tipping fee
B. Packer truck when requested by customer	
1. On day of service	71.45 plus tipping fee
2. From landfill to City	147.55 plus tipping fee

C. Roll-off unit

Container Size	Rental Rate One time or Exchange	Per Trip (Plus Tipping Fee)	Rental rate per day after the first five working days
22 yd.	14.50	122.30	19.73
30 yd.	19.73	122.30	19.73

Special haul rates shall be charged for collection and disposal of dead animals.

Rate for hazardous wastes and for infectious and potentially harmful waste shall be the actual cost for such service as billed by the City, plus 10% for administrative costs.

Community Events

A. Moscow Farmers Market 26 Week Season, May through October

1.

	Registration	11' x 15' Daily Space	5.5' x 15' Daily Space	Vehicle Surcharge Daily Parking
Tier 1				
Attend 1-8 markets	16.00	32.00	16.00	26.00
Tier 2				
Attend 9-17 markets	53.00	21.00	13.00	22.00
Tier 3				
Attend 18-26 markets	131.00	16.00	9.00	16.00

2. Youth Vendor (exempt from registration fee)	6.00/day per group
3. Performance Vendor (exempt from registration fee)	7.00 for 2.5 hours/day per group
4. Non-neighbor Space	5.00/day
5. Electricity use	11.00 day
6. Third penalty policy violation fine	50.00
7. Miscellaneous merchandise sales	up to 7,000
B. Mayor's Golf Tournament	
1. Registration	105.00 /individual 400.00 /team of four
C. Event Fees	
1. Event Permit	40.00
2. Alcohol Use application fee	100.00
3. Street Parade Permit	120.00
4. Idaho Transportation Department Permit	100.00
Arts Department	
A. Artwalk (Season)	
1. Business	450.00
2. Non-Profit	100.00
B. Artwalk (June)	
1. Host Location: Business	100.00
2. Host Location: Non-Profit	50.00
3. Arts Listing (available only in combination with host registration)	25.00
4. Youth Arts Listing (available only in combination with host registration)	no fee
5. Food Vendor	80.00
6. Youth Food Vendor	no fee
7. Main Street Art Vendor / Demonstrator	50.00

8. Youth Main Street Art Vendor / Demonstrator	no fee
C. Artwalk (October – May)	
1. Host Location: Business	40.00
2. Host Location: Non-Profit	20.00
3. Arts Listing (available only in combination with host registration)	10.00
4. Youth Arts Listing (available only in combination with host registration)	no fee
D. Palouse Plein Air	
1. Artist Registration	35.00
2. Student Artist Registration (18 years and older)	30.00
3. Plein Air Master Class	200.00
E. Entertainment in the Park	
1. Food Vendor	40.00
2. Outreach Vendor (no sale of merchandise or services)	25.00
F. Third Street Gallery	
1. Art Sales Commission	20%
2. Juried Exhibition Submission Fee	20.00

CITY COUNCIL STAFF REPORT

DATE: Monday, February 6, 2023

AGENDA ITEM TITLE

2022 Citizen Survey Report Presentation (ACTION ITEM) - Bill Belknap

RESPONSIBLE STAFF	REVIEWED BY
Bill Belknap, City Supervisor	
ADDITIONAL PRESENTER(S)	**OTHER RESOURCES**

DESCRIPTION

2022 marks the tenth comprehensive Citizen Survey conducted by the City of Moscow. Surveys have been conducted biennially since 2002 with the exception of 2020 due to the COVID-19 pandemic. These regular assessments serve as a benchmark of community perceptions and provide an evaluation of the municipal services delivered by the City of Moscow as measured by its residents. The results of each survey are used as a resource to assist in strategic planning efforts and resource allocation by City leaders by providing a means to measure citizen satisfaction with the City government and the services provided. Staff will provide an overview of the survey and the results for the Council's consideration.

STAFF RECOMMENDATION

Accept the 2022 Citizen Survey report.

PROPOSED ACTIONS

PROPOSED ACTIONS: Accept the 2022 Citizen Survey report; or take other action as deemed appropriate.

FISCAL IMPACT

PERSONNEL IMPACT

ATTACHMENTS

1. 2022 Citizen Survey Final Report

City of Moscow
2022 Citizen Survey

Report of Results

2022 marks the tenth comprehensive survey conducted by the City of Moscow. Surveys have been conducted biennially since 2002 in 2004, 2006, 2008, 2010, 2012, 2014, 2016, and 2018 with the exception of 2020 due to the COVID-19 pandemic. These regular assessments serve as a benchmark of community perceptions and provide an evaluation of the municipal services delivered by the City of Moscow as measured by its residents.

The results of each survey are used as a resource to assist in planning efforts and resource allocation by City leaders by providing a means to measure citizen satisfaction with the government and how to improve it.

This page intentionally left blank.

Table of Contents

Introduction 1
Background 1
Methodology 1
Topics 2
Response Rate 2
Measurement Scale 3
Converting Responses to the 100-Point Scale 3
Precision of Estimates 3
Data Comparison 4
Standard City Service Results 6
Quality of Life (Q1) 6
Quality of Your Neighborhood 6
Moscow as a Place to Raise Children, Live, Retire 7
Characteristics as they Relate to Moscow (Q2) 7
General Safety (Q3) 9
Safety Walking Alone at Night (Q4) 10
Problems in Moscow (Q5) 10
Population, Business/Retail, Jobs Growth (Q6) 12
City's Planning for Growth (Q7) 12
Frequency of Service Use (Q8) 13
Quality of City of Moscow Provided Services (Q9) 14
Overall Quality of Services (Q10) 16
Value of Services (Q11) 17
Interaction with City Government (Q12) 17
Obtain Information Related to the City (Q13) 18
Overall Direction of City (Q14) 19
Demographics 22
Employment (Q15) 22
Enrolled at a Local University (Q16) 23
Method of Transportation (Q17 – Q18) 23
Residency (Q19) 24
Housing & Household (Q20 – Q25) 24
Education Level (Q26) 25
Gender (Q27) 26
Income (Q28) 26
Race or Ethnicity (29) 27
Age (Q30) 27
Voter Registration & Habits (Q31 – Q35) 27

Open-Ended Comments 28
Conclusion 28
Appendix – Citizen Survey Tool with Percentage Responses i

This page intentionally left blank

.

Introduction

Background

2022 marks the tenth comprehensive survey conducted by the City of Moscow. Surveys have been conducted biennially since 2002 with the exception of 2020 due to the COVID-19 pandemic. These regular assessments serve as a benchmark of community perceptions and provide an evaluation of the municipal services delivered by the City of Moscow as measured by its residents. The results of each survey are used as a resource to assist in strategic planning efforts and resource allocation by City leaders by providing a means to measure citizen satisfaction with City government and the services provided.

The survey should be viewed as a consumer scorecard for the community that provides a representative cross-section of all residents. Previous, current, and future survey data provide a planning tool to measure both trends in the community and a basis for addressing important issues through the City's strategic planning process. These randomly administered surveys are carefully formulated, tabulated, and analyzed to provide elected officials with the best means of unbiased decision-making. Most of the respondents are typically not involved in local government and rarely attend City meetings or contact City staff or elected officials with questions. Respondents are typical of the nearly 25,500 (2020 Census) residents who make Moscow their home.

Methodology

To ensure an appropriate sample size that would provide statistically valid results, a random sample of 1,200 Moscow residential addresses is used. To develop the random sample of 1,200, an address list is obtained that includes all residential addresses within the 83843 zip code. From that list, all addresses outside of the Moscow city limits are removed and a random number is assigned to each of the remaining addresses which are then sorted by those randomly assigned values, with the first 1,200 chosen for the sample.

Geographic distribution of respondents is a fairly well-balanced representation from all sectors of the survey. The lowest response rate from every survey previously collected as well as for this survey, has occurred in the University sector with higher rates found in the more densely populated sections of the city. Sector response rates are as follows:

- South 10%
- East 22%
- Central City South 14%
- Central City North 17%
- University 9%
- North Central 16%
- Northwest 13%

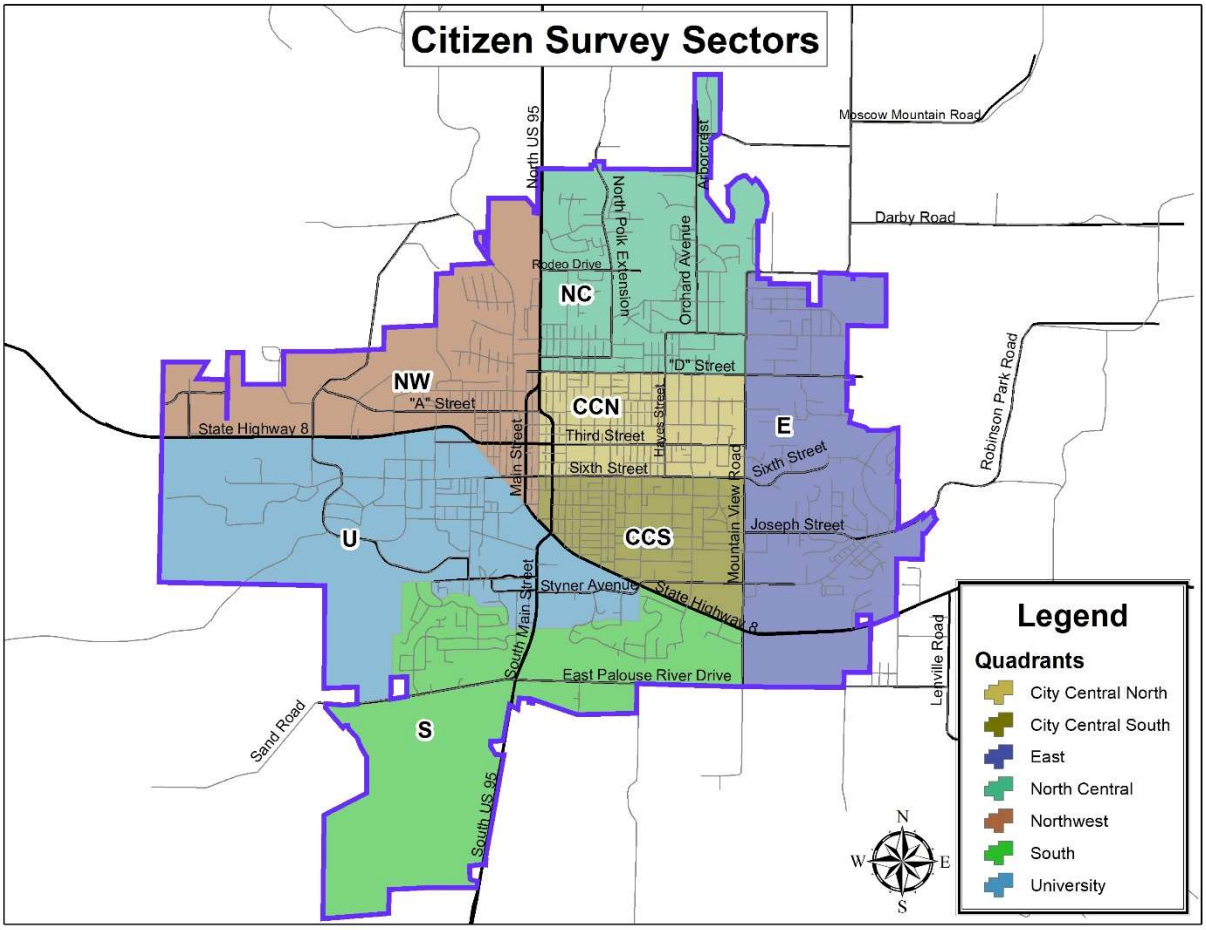

Topics

A variety of topics are covered in the City of Moscow Citizen Survey. Questions 1 through 14 include standard City-service questions, asked in the same manner each year. Demographic questions include 15 through 35, and 36 and 37 are open-ended questions. Prior year surveys also included questions from City Commissions. Beginning in 2017, the City adopted an annual survey process, conducting Commission surveys in odd years and Citizens Surveys in even years. A full listing of responses for this survey, by percent for each item is listed in Appendix – Citizen Survey Tool with Responses.

Response Rate

The 2022 survey response rate was 26% and accounts for 20 non-deliverable returned surveys compared to 29% in 2018, 29% in 2016, 29% in 2014; 33% in 2012; 31% in 2010; 32% in 2008; 36% in 2006; 43% in 2004; and 40% in 2002. Generally mailed survey response rates range from 25% to 40%. While the 2022 survey responses fell within this range, it was the lowest response rate since the inception of the survey. The 26% response rate resulted in a final sample size of 311 respondents which provided a confidence interval of plus or minus 5.5% utilizing a 95% confidence level.

Some questions received a high non-response or “don’t know” rating, resulting is a non-statistically valid response. Those items have been noted throughout the report. Non-responses are either questions that were simply not answered, or were not answered properly. For example, where two options were chosen

when only one was requested. All figures are rounded so totals may be slightly greater than 100 points or percent in some instances. Additionally, percentages in the report, especially for standard city questions, are calculated using the actual response rate per question after removing the non-response counts from the calculation. For comparison, percentages in the appendix are raw percentages and are not adjusted to account for non-responses.

Measurement Scale

Questions are based, to the greatest extent possible, on a five-point Likert scale, a widely used psychometric scale commonly used in questionnaires (i.e. excellent, good, neutral, poor, very poor). The Likert scale allows a respondent to evaluate a specific item based upon their level of agreement or disagreement with that item. All survey questions except for demographic questions are based on this scale because of its standardization and the ability to easily compare and provide a visual graph of the data.

The Likert scale is also used to convert data to a 100-point scale for ease of comprehension and comparison. For the 100-point scale a score of 100 represents "excellent" (the most agreed with response), and 0 represents "very poor" (the most disagreed with response). For practical purposes, a score of 70 is equivalent to "good" on the Likert scale.

Converting Responses to the 100-Point Scale

Converting to the 100-point scale is accomplished by assigning a numerical value to each of the Likert scale rankings. If "don't know" was checked or the respondent left the question blank, the response was not included in the computation of the score. Using the 100-point scale, each response was assigned a number: excellent = 1, good = 0.75, neutral = 0.50, poor = 0.25 and very poor = 0. These numbers were then used to weigh each percentage for evaluative questions. Below is a hypothetical example where 20% of total respondents rated a service "excellent," 24% "very good," 28% "neutral," 16% "poor," and 12% "very poor," for a score of 56 on a 100-point scale.

Conversion to 100 – Point Scale						
	Excellent	Good	Neutral	Poor	Very Poor	Total
# Surveys	10	12	14	8	6	50
% Surveys	20%	24%	28%	16%	12%	100%
100-Point Scale	20% x 1	24% x 0.75	28% x 0.5	16% x 0.25	12% x 0	=
	0.2	0.18	0.14	0.04	0	0.56 x 100 = 56

Precision of Estimates

It is typical to describe the precision of estimates made from surveys by a both a confidence level as well as a confidence interval. The confidence level represents the accuracy of the survey, that is the percentage of responses that would fall within the confidence interval 95% of the time. The confidence interval is the width of the range the responses would fall within at the specified confidence level. As the sample size decreases, the confidence interval will increase for a given confidence level. For the 2022 survey at the 95% confidence level, the confidence interval is ±5.5%. As a result, it would be expected that 95% of the time, the general population's response to a question would be within ±5.5% of the score reported from the survey respondents. Hence, if the proportion of respondents who rate the overall quality of life in Moscow as "excellent" is 36% in 2022, had we been able to ask the same question to every adult in the

City of Moscow, we would find that 95% of the time between 30.5% and 41.5% would rate the overall quality of life in Moscow as “excellent.”

If more precise results are sought in the future, the City could choose a larger sample size; however, increasing precision by two percentage points will require an increase in the sample size by more than 1,000 participants, essentially tripling the required size of the sample. The precision of estimates also decreases within each geographic subsection because the smaller number of responses.

Data Comparison

Citizen surveys are a great way for leaders to understand how citizens feel about their community and the services that a City provides. Communities that have conducted citizen surveys for many years believe it is essential that leaders keep in mind that very few residents participate in government policy-making through traditional means, as this survey substantiates. This citizen survey, however, gives residents a chance to voice their opinions in a way they might not otherwise.

With data from multiple surveys, reaching as far back as 2002, we are able to monitor trends in the data. Future surveys will continually be analyzed to substantiate the trends found in this and previous surveys. Accurately interpreting this and survey data from past years is essential to identifying the needs of the citizens of Moscow.

This page intentionally left blank.

Standard City Service Results

Quality of Life (Q1)

A majority of the questions in this survey were dedicated to gauging citizen perceptions on the quality of life and services provided in the community. Respondents have again rated the overall quality of life as very favorable, with 93% of the citizens noting the overall quality of life in Moscow as "good" or "excellent." That percentage, converted to the 100-point scale, rates as an 82. Scores in previous surveys ranged from 80 to 84.

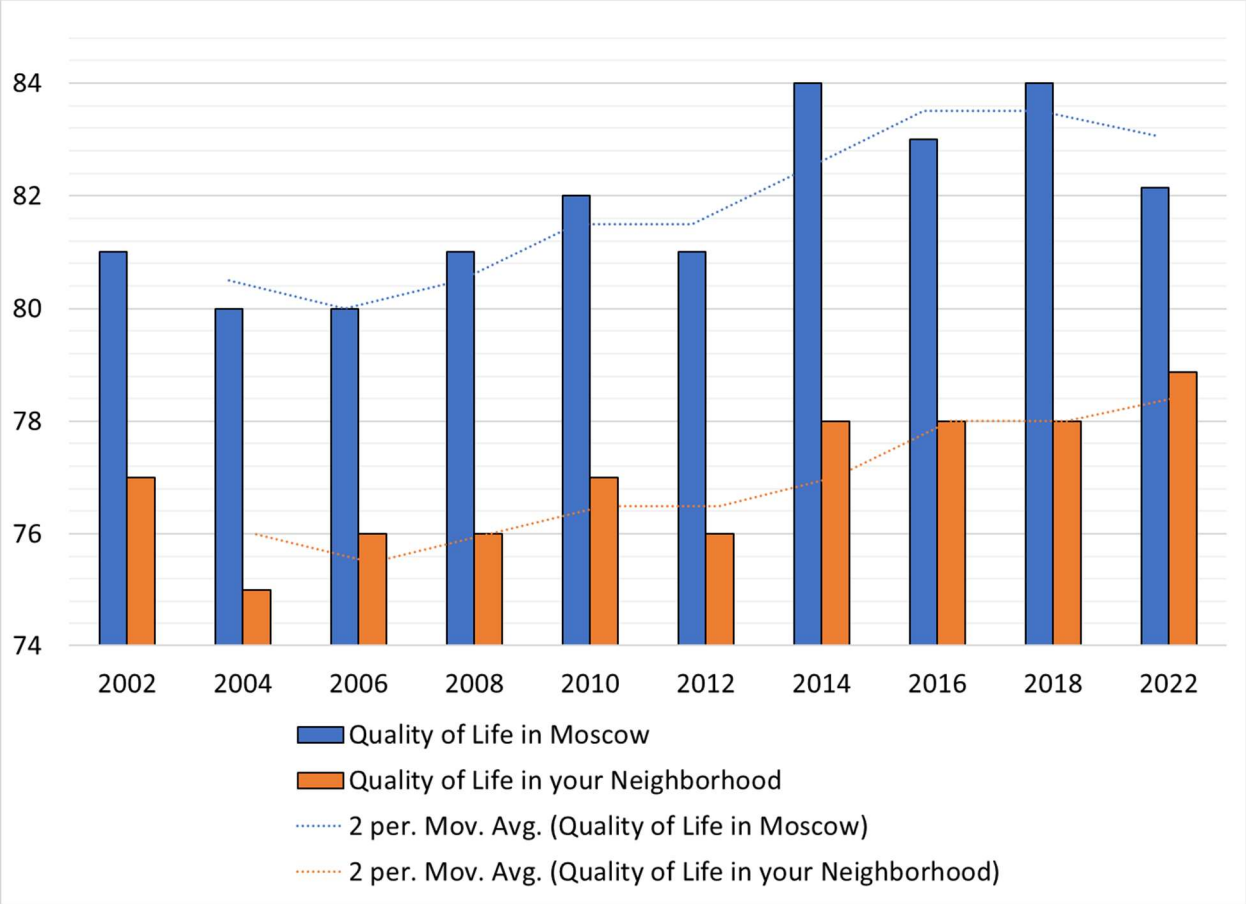

Quality of Your Neighborhood

Overall, quality of neighborhoods in Moscow was rated by respondents as very favorable, with a score of 79 in 2022 and historical average of 77. When answers were broken down by quadrants, University and North West received the worst 100-Point Scale ratings at 70 and 72 respectfully, and the East and South received the best at 83 and 85 respectfully.

Moscow as a Place to Raise Children, Live, Retire

Respondents rated their perceptions as a place to raise children, live, and retire above the 10-year average in 2022. The 100-point scale score for Moscow as a place to raise children 84 (average 83), place to live 81 (average 81), and place to retire 71 (average 68).

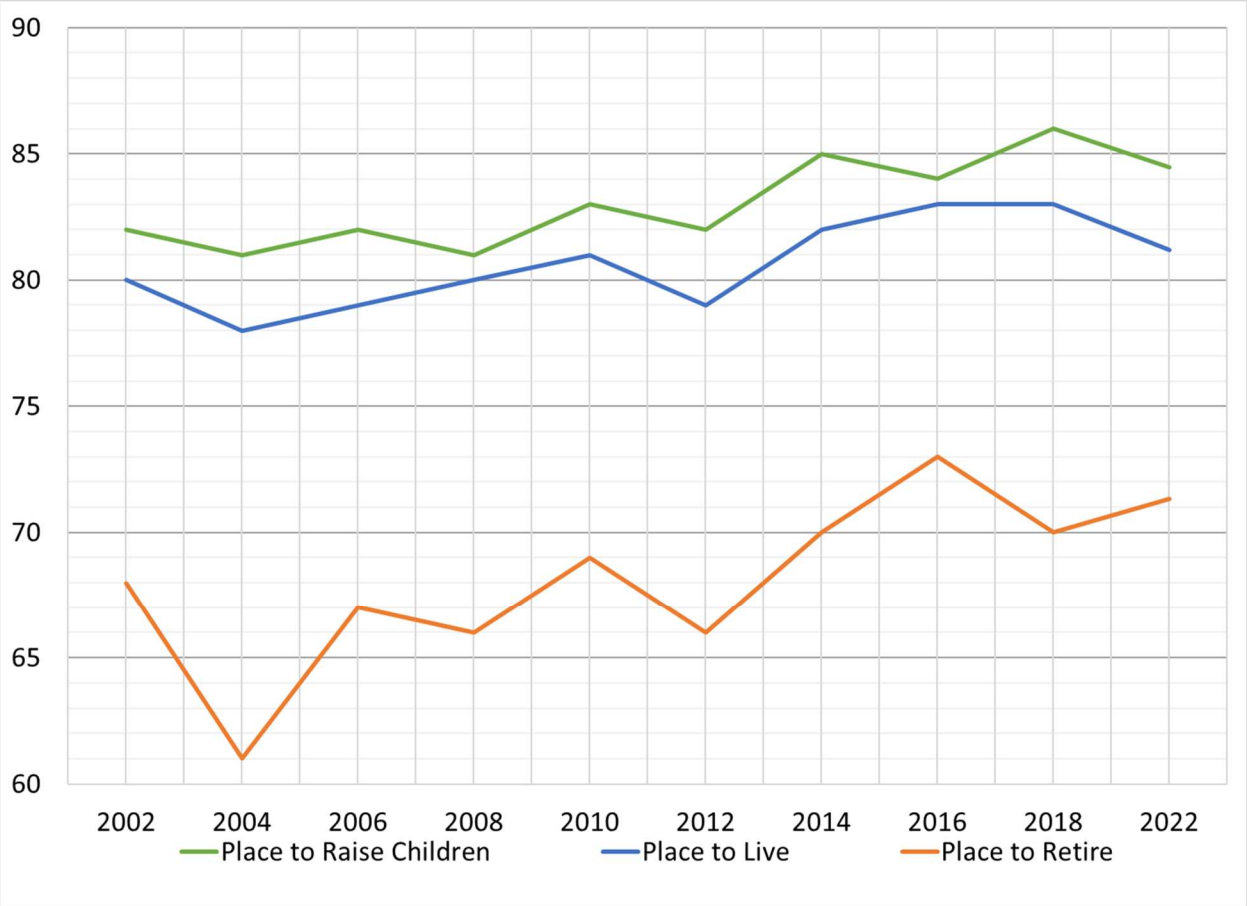

Characteristics as they Relate to Moscow (Q2)

Listed in the table below are ten characteristics of Moscow, the 2022 results in 100-point scale, the lowest and highest scores from past surveys (with most recent year noted), and the point spread for those scores. Results show four with a positive increase from 2018 to 2022 including overall appearance of the City, shopping opportunities, job opportunities, and entryways to Moscow. Job opportunities had the greatest increase from 2018 to 2022 at 10%. The items resulting in decreases include quality of K-12 schools, air quality, recreation opportunities, access to affordable housing, and openness and acceptance of the community to people of diverse backgrounds. Access to affordable housing dropped 31% from 2018 to 2022. Air quality, access to affordable housing, and openness and acceptance of the community towards people of diverse backgrounds each received the lowest 100-Point Score since the survey began. The quality of K-12 schools, opportunities to attend cultural activities, and recreation opportunities have remained relatively stable varying within a few points on the 100-point scale.

	2018	2022	Lowest	Highest	Point Spread
Overall appearance of the City	73	76	71 (2008)	76 (2022)	5
Quality of K – 12 schools in Moscow*	72	70	69 (2008)	72 (2018)	3
Opportunities to attend cultural activities	76	76	75 (2010)	78 (2014)	3
Shopping opportunities	50	54	47 (2016)	58 (2002)	9
Air quality	75	69	69 (2022)	79 (2016)	10
Recreation opportunities	74	72	70 (2012)	74 (2018)	4
Job opportunities	53	59	41 (2010)	59 (2022)	18
Access to affordable housing	46	35	35 (2022)	53 (2002)	18
Openness and acceptance of the community towards people of diverse backgrounds	70	63	63 (2022)	77 (2014)	14
Entryways to Moscow**	63	64	63 (2018)	64 (2022)	1

**"Don't Know" or non-response rate greater than 20%, historically consistent for this item.*
***Question was first asked in 2018.*

General Safety (Q3)

The City of Moscow ranks safety as an upmost concern and prides itself on the service provided to citizens in the area of safety. Whether it is the community policing approach embraced and promoted daily by police officers, or the thousands of volunteer hours donated by fire fighters, the City of Moscow continues to receive high marks in the category of safety. Three categories were questioned: safety from violent crimes (e.g. robbery, assault), property crimes (i.e. burglary, theft), and fires.

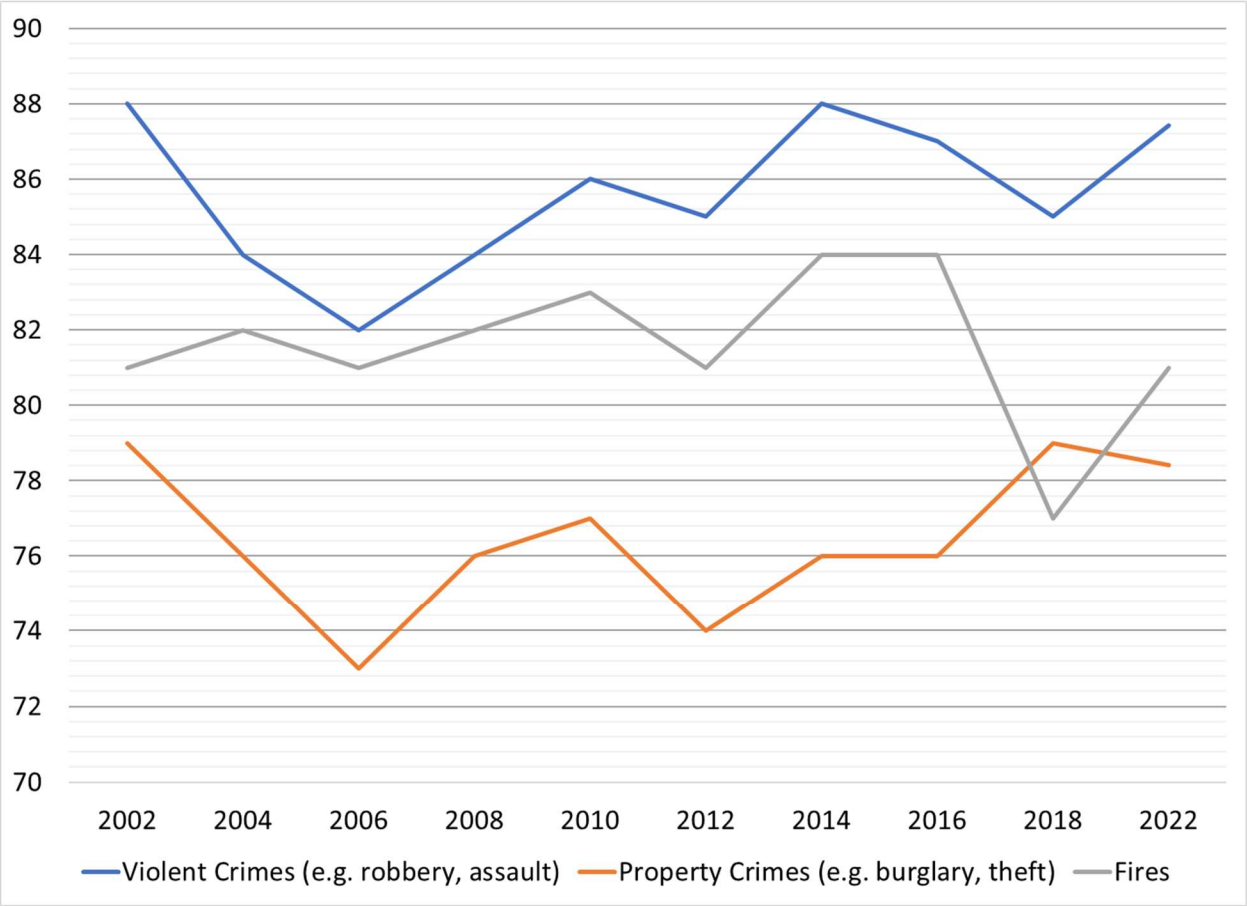

Safety Walking Alone at Night (Q4)

In this question respondents are asked to rate how safe they feel walking alone at night, in downtown areas, in City parks outside their neighborhood, and with current levels of street lighting. The results for neighborhoods and parks outside their neighborhoods improved from 2018. Current levels of street lighting decreased by six points from 2018. Although the street lighting saw a decrease, all aspects of these safety items are still ranked above their historical averages.

	2002	2004	2006	2008	2010	2012	2014	2016	2018	2022
In your neighborhood	84	83	81	82	83	83	86	85	84	85
In downtown areas	81	77	77	79	81	82	83	83	81	81
In parks outside your neighborhood	69	67	67	68	69	69	71	71	66	73
With current levels of street lighting	66	62	62	60	65	66	67	65	73	67

Problems in Moscow (Q5)

Respondents were asked to gauge how problematic certain aspects in Moscow are including traffic, drug abuse, alcohol abuse, taxes, loitering youth, growth, crime, domestic violence, and run-down houses and buildings. Drug abuse, alcohol abuse and domestic violence all received a greater than 20% “don’t know” or non-response rate. Drug abuse and domestic violence have consistently experienced this, alcohol abuse has been high, but has not consistently been greater than 20%. These results are less reliable due to the reduced response rate.

Trends over time for all items are shown in the table below, for purposes of clearly examining these items, a larger 100-point score means the item is perceived as less of a problem. The 2022 survey results showed greatest perceived problems are growth, taxes, and traffic. Growth dropped by 15 points compared to the 2018 survey results. Other aspects that also dropped compared to 2018 are traffic (6 points), taxes (4 points), and domestic violence (1 point). Items that improved compared to 2018 include drug abuse (7 points), alcohol abuse (5 points), loitering youth (1 point), crime (1 point), and run-down houses and buildings (3 points).

	2022	Lowest	Highest	Point Spread
Traffic	60	60 (2022)	71 (2018)	11
Drug Abuse	58	51 (2018)	64 (2002)	13
Alcohol Abuse	59	54 (2018)	60 (2016)	6
Taxes	62	62 (2022)	72 (2010)	10
Loitering Youth	88	79 (2012)	88 (2022)	9
Growth	56	56 (2022)	74 (2012)	18
Crime	74	73 (2018)	77 (2010)	4
Domestic Violence	59	59 (2022)	68 (2008)	9
Run Down Houses	68	65 (2018)	69 (2004)	4

When breaking down each issue by responses per quadrant, we may be able to focus more on the aspect in that portion of the City versus others. Below is a table broken down by issue and the quadrants that found them most and least problematic. Their 100-point scale score is included.

	Most Problematic	Least Problematic	Difference
Traffic	East (55)	South (65)	10
Drug Abuse	East/South (53)	City Central North (66)	13
Alcohol Abuse	East (54)	City Central North (65)	11
Taxes	South (55)	University (81)	26
Loitering Youth	East (80)	University (91)	11
Growth	East (47)	North West (72)	25
Crime	University/East (71)	City Central North (78)	7
Domestic Violence	City Central North (53)	University (71)	18
Run Down Houses	North West (64)	University (73)	9

Population, Business/Retail, Jobs Growth (Q6)

Respondents were asked to rate specific growth items including population, business/retail and job growth on a five-point Likert scale of "much too slow" to "much too fast" with an option for "don't know." This question is more understandable by looking at percentage of respondents for each category. Below are the results as compared to the 2016 results. Respondents had a lower perception of population growth "just right" by 5%. Response rates increased for "too fast" by 2%. Business/ Retail growth and Jobs have been perceived as "too slow," however Job Growth responses resulted in a 19% decrease of "too slow," and an increase for "just right" by 1%.

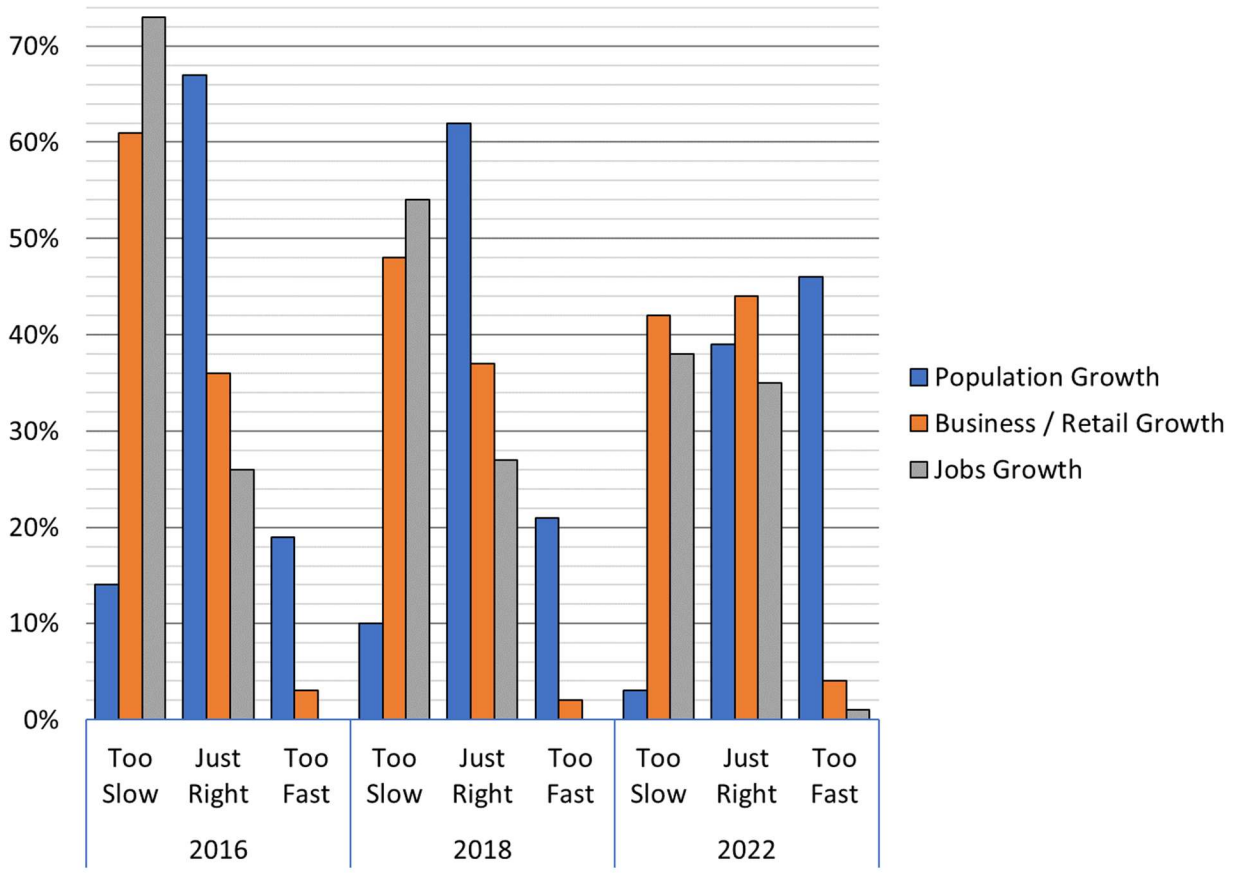

**Job growth received a greater than 20% "don't know" or non-response rate.*

City's Planning for Growth (Q7)

When asked if the City does a good job of planning for the growth of our community, responses have been fairly low for all years surveyed which is in keeping with national trends. The 2022 results showed similar trends to those seen previously with 32% of respondents noting they "strongly agree" or "agree" that "The City does a good job of planning for the growth of our community." This is down 6% percent from 2018 and up by 12% from the lowest rating of 20% in 2004. This translates to a score of 48 on the 100-point scale. 35% of respondents were neutral on the subject, and 33% selected "disagree" or "strongly disagree" that the City is doing a good job of planning for the growth of our community. The quadrants that selected "disagree" or "strongly disagree" the most were East and North Central. The ones that

agreed that the City does a good job of planning for growth the most were City Central South, University and North West quadrants.

Frequency of Service Use (Q8)

When asked to rate the frequency of which citizens participate in certain activities, respondents were given five options ranging from "'once/never" to "> 26 times" and "don't know." Items surveyed included use of the public library, participation in a recreation program or activity, visiting city parks, recycling paper, cans or bottles, volunteering for a group or activity, and attending an event at the 1912 Center. All items were surveyed for all years, except recycling, volunteerism and visits to the 1912 Center which were included beginning in 2004.

The chart below shows the percentage of usage as reported by respondents in 2022. The majority of respondents noted they used the library, participated in a recreation program, volunteered and attended an event at the 1912 Center either once or never. The majority of respondents noted they visited a City park "3 – 12 Times," and generally recycled "more than 26 times" in the last year, consistent with the 2018 results. Generally speaking, participation in recreation programs and visits to city parks increased slightly compared to 2018 results while public library services, recycling, volunteering and attending 1912 Center events decreases. These changes could be a result from COVID 19 impacts.

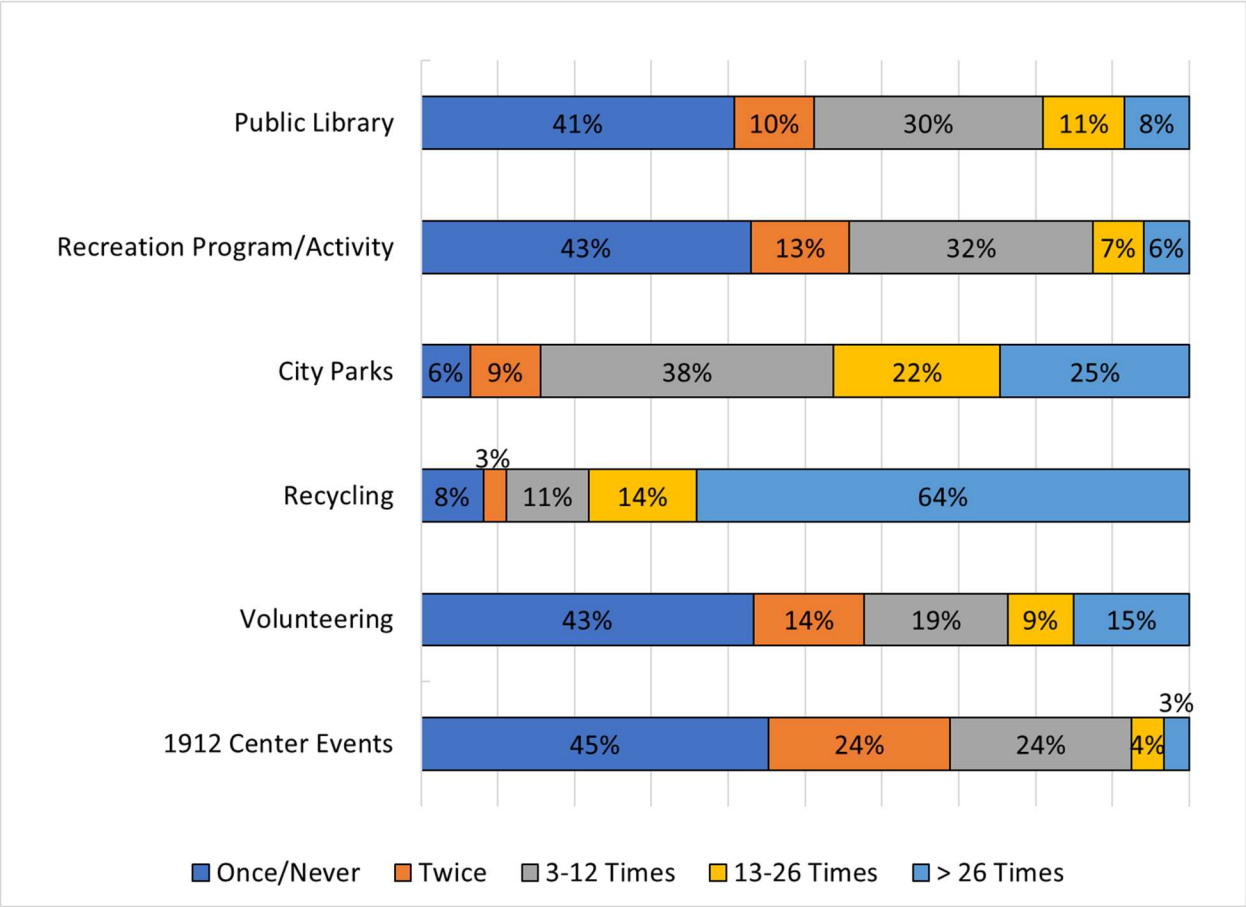

The table below breaks down use of each service by quadrant.

	Most Used	Least Used
Public Library	City Central North	North West
Recreation Program	South	North West
City Parks	City Central North	University
Recycling	City Central North	University
Volunteering	City Central North	North West
1912 Center Events	City Central North	University

Quality of City of Moscow Provided Services (Q9)

Survey participants were asked to rate virtually all aspects of services provided by the City of Moscow. Historical 100-point scale trends from 2002 to present can be analyzed from the table below. Most services received an above historical average score except Police, Fire, Emergency Medical, Garbage, Recycling, Public Parking, Traffic Laws, Planning and Zoning, and Sidewalk Maintenance.

From 2018 to 2022 most services had an increased score except for Police, Fire, Emergency Medical, Garbage, Library, Recreation Facilities, Traffic Laws, Planning and Zoning, and ADA Accessibility which decreased in score. The most significant decrease from 2018 to 2022 was Garbage Collection (5 points) and Planning and Zoning (6 points). The most significant increase from 2018 to 2022 was Recycling Services and Street Lighting.

The overall greatest rated services are Fire, Emergency Medical, Library, Park Maintenance, and City Parks which all received a score above 80. The least rated services are Street Maintenance, Public Parking, Planning and Zoning, and Sidewalk Maintenance which all received a score below 60. The best rated service is City Parks with a 84 score and the worst service is Public Parking with a 48 score.

	2002	2004	2006	2008	2010	2012	2014	2016	2018	2022
Amount of Public Parking	51	48	49	53	51	54	55	51	47	48
City Parks	79	77	78	77	79	79	79	80	82	84
Cleanliness of Streets	67	67	67	62	70	67	70	67	69	71
Ease of Car Travel in the City	60	58	59	64	64	62	65	64	63	63
Emergency Medical Services/Ambulance	80	80	81	82	81	82	83	84	83	81
Enforcement of Traffic Laws	64	63	64	65	67	66	68	69	66	63
Fire Services	83	83	84	83	83	83	85	85	84	83
Garbage Collection	79	79	80	79	78	81	79	82	80	75
Handicap Accessibility in Public Places*	*	64	65	66	67	64	67	64	64	61
Library Services	79	78	78	79	81	79	80	79	82	81
Park Maintenance	78	77	78	76	79	78	77	79	81	82
Planning and Zoning*	54	47	45	48	52	57	55	55	57	51
Police Services	73	74	74	78	78	78	78	82	80	76
Recreation Facilities	71	72	72	74	75	70	74	76	76	75
Recreation Programs and Classes*	71	70	70	71	71	69	70	71	71	72
Recycling Services	83	81	83	80	79	79	74	80	66	71
Sewer Services	75	73	74	75	75	74	74	76	76	76
Sidewalk Maintenance	55	54	52	49	54	51	53	51	50	50
Snow Removal	63	55	58	50	55	54	59	59	61	62
Street Lighting	61	56	57	56	58	59	61	58	57	61
Street Maintenance	60	57	58	55	60	59	58	55	56	58
Water Services	73	65	67	68	68	69	69	69	70	70

**Handicap accessibility in public places, recreation programs and classes, and planning & zoning received > 20% "don't know" or non-response rate.*

	Highest Score	Lowest Score	Difference
Amount of Public Parking	South (52)	North West/North Central (46)	6
City Parks	South (87)	University/North Central (82)	5
Cleanliness of Streets	South (74)	North Central (66)	8
Ease of Car Travel in the City	South (66)	University (59)	7
Emergency Medical Services/Ambulance	City Central North (86)	North Central (76)	10
Enforcement of Traffic Laws	North West (69)	University (55)	14
Fire Services	City Central North (88)	East (79)	9
Garbage Collection	City Central South (79)	North Central (67)	12
Handicap Accessibility in Public Places*	South (66)	North West (57)	9
Library Services	University/East (85)	North West (76)	9
Park Maintenance	North West/South (85)	East/City Central North (80)	5
Planning and Zoning*	City Central South/South (55)	North West/East (49)	6
Police Services	City Central South (81)	North Central (71)	10
Recreation Facilities	East (78)	North Central (70)	8
Recreation Programs and Classes*	University (77)	North Central (67)	10
Recycling Services	City Central South (81)	University (56)	25
Sewer Services	East/City Central North (78)	North Central (71)	7
Sidewalk Maintenance	East (56)	City Central North (43)	13
Snow Removal	South (66)	North West (58)	8
Street Lighting	South (66)	University (54)	12
Street Maintenance	City Central South/South (62)	North Central (49)	13
Water Services	East (76)	University (63)	13

Overall Quality of Services (Q10)

When asked generally about the overall quality of services provided by the City of Moscow, scores are consistently positive for all years surveyed. In 2022, this question received a score of 73 on a 100-point scale, in keeping with the historical average of 72 and just two points lower than the highest score of 75 received in 2016. When breaking this question down by quadrant, East and City Central South gave the most positive responses while North Central and University gave the least.

Value of Services (Q11)

Respondents were asked to rate the value they felt they received for City-provided services, considering the amount charged for the service. Services included for rating were garbage, water, sewer, and parks and recreation programs. All services have remained relatively consistent from previous years' surveys and all services either increased or remained the same when compared to the 2018 survey. The historical ratings can be found in the following table.

	2002	2004	2006	2008	2010	2012	2014	2016	2018	2022
Garbage collection	74	74	72	72	71	71	70	72	71	71
Water services	69	59	60	62	61	63	63	61	64	66
Sewer services	71	68	67	67	69	69	68	68	69	70
Parks & Rec programs	70	71	69	68	71	71	71	71	72	73

Below is a table that breaks responses down by least and greatest responses by quadrant.

	Highest Score	Lowest Score	Difference
Garbage collection	East (74)	North Central/South (68)	6
Water services	City Central South (70)	North Central (61)	9
Sewer services	University (81)	North Central (61)	20
Parks & Rec programs	University (81)	North Central (65)	16

Interaction with City Government (Q12)

Since 2004, respondents have been asked to rate their frequency of interaction with City government on a scale ranging from "once/never" to "> 26 times." Previous survey results were expressed by a 100-point scale, however, this year it is represented as a percentage to provide a better understanding and more accurately represent the survey results. The least participated interaction by respondents is providing oral testimony at public meetings with 96% saying they had either once or never participated. The highest participated interaction with city government was reading legal notices in the newspaper.

For future surveys it is recommended that questions be included asking respondents how often they access streaming video on the web or via social media. Below is a table of responses for 2022.

	Once/Never	Twice	3-12 Times	13-26 Times	> 26 Times
Accessed Council agendas, public hearing notices, the City Code &/or other info from the City's website	56%	14%	22%	4%	1%
Read a legal notice in the newspaper	54%	14%	18%	8%	3%
Attended a City Committee or Commission meeting	88%	6%	4%	2%	0%
Provided oral or written testimony at a public meeting	96%	2%	1%	0%	0%
Contacted the Mayor or City Supervisor regarding City policy &/or process	88%	8%	3%	0%	0%
Contacted a City Council member regarding City policy &/or process	82%	12%	5%	0%	0%
Contacted City staff regarding City policy &/or process	77%	14%	8%	0%	0%
Watch a City Council Meeting on TV	83%	10%	6%	0%	0%

Obtain Information Related to the City (Q13)

Starting in 2012, respondents were asked how they obtained information about Governmental activities. From 2012 until 2016, an "Other" option was available. Starting in 2016, the "Other" option was changed to "City Sponsored Social Media". In previous surveys, these answers were represented by the 100-point scale. For the 2022 survey, we combined "Very Often" and "Often" and compared the same numbers to previous survey results. The graph below shows a trend over time for how "often" each type of media is used to obtain information. There is a decrease in local newspaper and the rest of the medias have either remained consistent or have seen more use over time. Although there is a decrease in use of local newspaper, it is still the most popular method. It is suggested for future surveys to include the City's YouTube channel as a source of information.

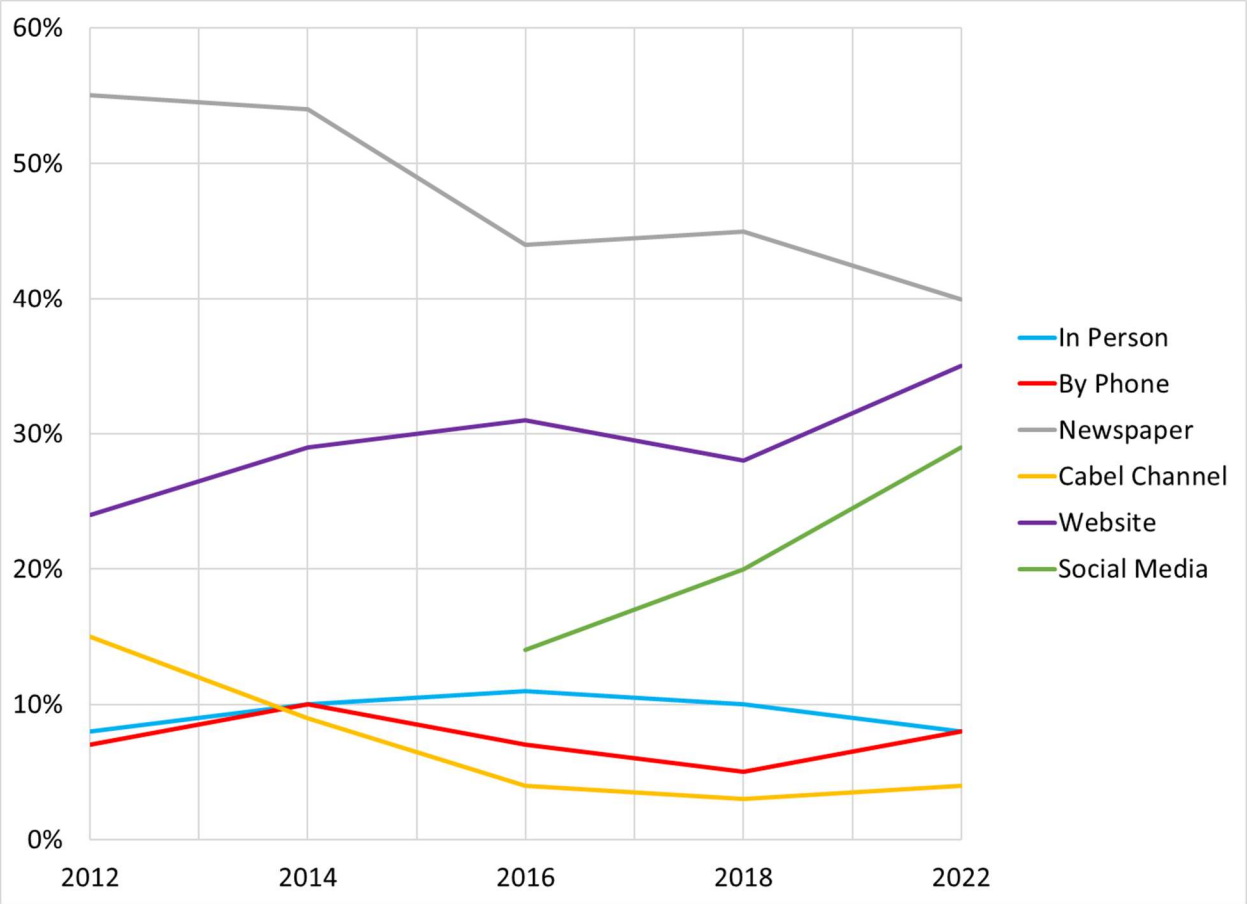

Overall Direction of City (Q14)

Beginning in 2004, a series of questions was included to gauge respondents' overall views of the City as an organization. Respondents were asked to convey their level of agreement with statements such as "I am pleased with the overall direction the City is taking." All items within the question pertain to communication and access to local government.

All of these items received a score greater than the historical average and either remained consistent with the 2018 responses or increased. The opinion of "The City considers citizen's opinions in decisions" received a greater than 20% "Don't Know" response. Below is a table comparing the 100-point scores for all years this question was asked.

	2004	2006	2008	2010	2012	2014	2016	2018	2022
I am pleased with the overall direction that the City is taking	58	54	54	58	60	61	65	63	63
I am well informed on major issues in the City of Moscow	53	55	55	55	51	55	53	53	61
The City government welcomes citizen involvement	58	62	61	64	63	67	66	65	69
The City considers citizen's opinion in decisions*	51	55	53	57	57	60	59	59	66
I am well informed about City process and procedures	47	50	49	50	48	49	48	48	57
The City provides adequate access to public information related to governmental activities	56	61	60	62	63	63	62	62	65

	Most Agreed	Least Agreed	Difference
I am pleased with the overall direction that the City is taking	North West/City Central North (63)	City Central North/South (56)	7
I am well informed on major issues in the City of Moscow	City Central North/City Central South (62)	University (46)	16
The City government welcomes citizen involvement	City Central North (72)	North Central (58)	14
The City considers citizen's opinion in decisions*	University (66)	North Central (51)	15
I am well informed about City process and procedures	City Central South (57)	University (36)	21
The City provides adequate access to public information related to governmental activities	City Central South (68)	North Central (55)	13

This page intentionally left blank.

Demographics

Demographics collected for the survey reveals that a good cross-section of the community responded to the survey. Data is collected on employment, enrollment at local universities, transportation habits, residency, household make up, education, income, ethnicity, age, gender, and voting habits. Applicable demographics are compared to the U.S. Census and to verify that the sample used in the survey is a good representation of the population of Moscow as a whole. This sample does correlate with US Census data.

Employment (Q15)

Employment of Moscow residents as represented by the survey samples includes 53% of the population that is employed full-time, 15% that are employed part-time, 32% that are not employed and 3% who chose to not respond.

In the years the surveys have been administered, the percentages have been fairly steady, within about 3 – 4% difference per item over the years. In 2022 "full-time" employment results increased 3% from 2018 and "not employed" decreased by 3% from 2018.

	2002	2004	2006	2008	2010	2012	2014	2016	2018	2022
Not Employed	32%	28%	29%	27%	30%	31%	32%	24%	35%	32%
Part-time	19%	22%	23%	20%	17%	18%	19%	16%	13%	15%
Full-time	49%	50%	48%	53%	52%	48%	48%	57%	50%	53%

Enrolled at a Local University (Q16)

Of the respondents in the 2020 survey 10% noted they were attending a local university full-time and 3% were attending part-time, while 88% said they were not attending a local university, 2% did not respond. This is in line with previous years with a one percent increase in full-time attendance.

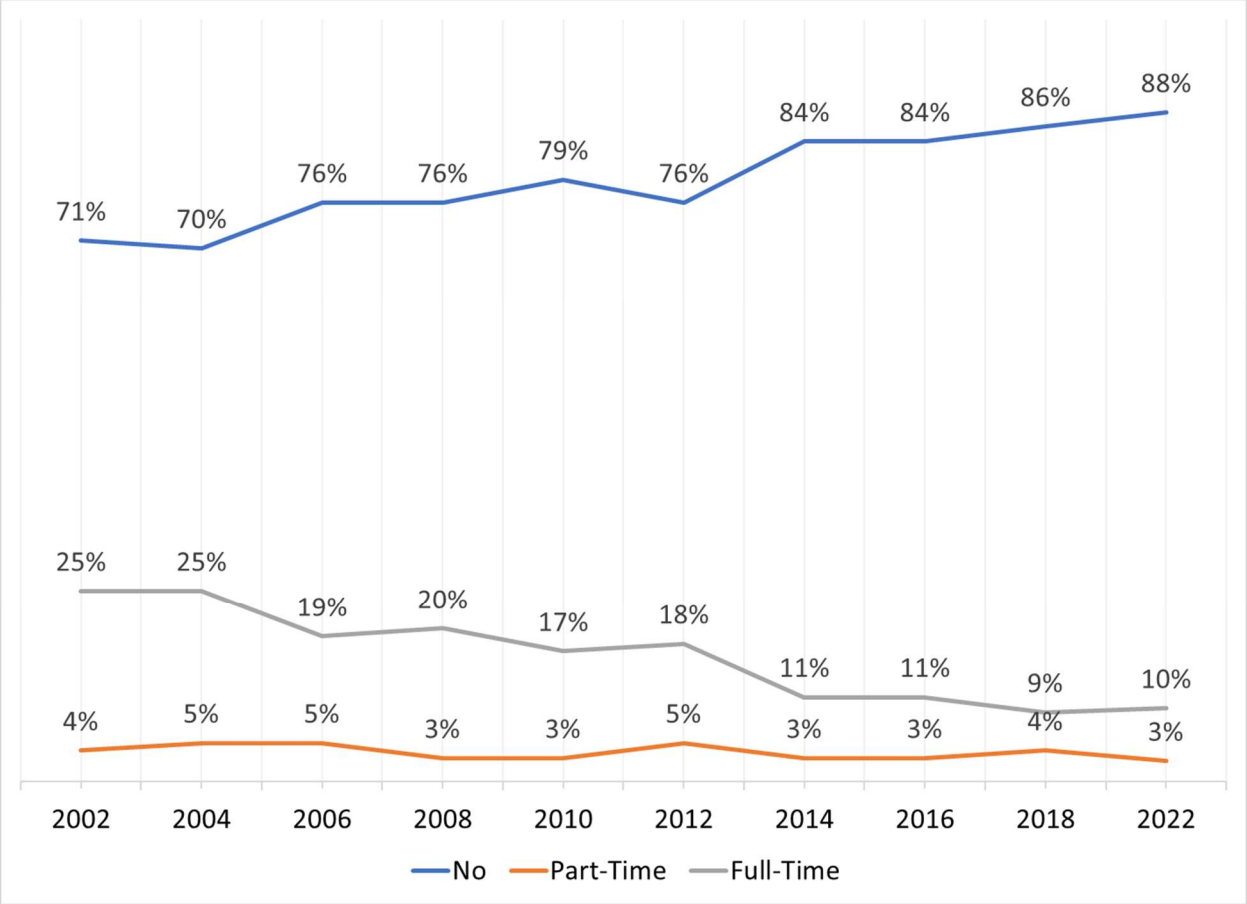

Method of Transportation (Q17 – Q18)

When asked what one method of transportation respondents usually use for the longest distance of their commute to work or school, 78% reported they use a motorized vehicle, 7% bike, 6% walk, 4% work at home, 5% said other, and 6% did not respond. When respondents marked other or did not respond, comments included local transit and retirement. Future surveys could include the public transportation option as a response, and gauge use of those services in the community.

	2002	2004	2006	2008	2010	2012	2014	2016	2018	2020
Motorized Vehicle	76%	77%	74%	73%	65%	70%	70%	71%	77%	78%
Bicycle	6%	7%	9%	10%	9%	9%	7%	7%	4%	7%
Walk/Run	14%	12%	13%	12%	10%	11%	7%	11%	9%	6%
Work at Home	2%	1%	2%	2%	3%	2%	1%	1%	2%	4%
Other	1%	3%	3%	3%	2%	2%	4%	4%	4%	5%

As a follow up question for those who use motorized vehicles, respondents noted if other people (adults or children) usually ride with them to and from work, 22% of those who use motorized vehicles answered they do ride with others, while 71% of those who use motorized vehicles noted they do not.

Residency (Q19)

Respondents were asked to note how long they've lived in Moscow. 2022 results showed a similar trend to those seen in 2018 except a 7% increase for results "2 – 5 years." Percentages of length of residency for all survey years are listed in the table below.

	2002	2004	2006	2008	2010	2012	2014	2016	2018	2022
Less than 2 Years	12%	13%	15%	13%	11%	11%	13%	13%	10%	12%
2 – 5 Years	23%	23%	24%	20%	22%	21%	15%	16%	19%	17%
6 – 10 Years	16%	12%	10%	17%	13%	14%	14%	10%	10%	17%
11 – 20 Years	12%	16%	16%	14%	14%	15%	15%	18%	19%	16%
More than 20 Years	36%	36%	35%	37%	38%	37%	41%	40%	40%	38%

Housing & Household (Q20 – Q25)

Of the2022 respondents, 63% said they live in a detached one family house detached from any other houses, while 12% are living in a duplex or townhouse, 22% in an apartment or condominium, and 3% in a mobile home. All responses are consistent with the historical average. However, single family housing dropped by 6% and apartments or condominiums increased by 5%. Some respondents selected "Other" as an option and most comments were Senior Living Facility.

Additionally, respondents provided information on the number of people living in the household, with 22% reporting they lived alone, 44% said two people, 13% three people, 11% four people, 5% five people, and 4% live with more than five people. The amount of people that live on their own increased by 4% while people who live with one other person decreased by 4% from 2018 to 2022. Other statistics remained consistent. In 2021, the US Census Bureau reported the average persons per household in Moscow was 2.18 and the owner-occupied housing rate was 42%.

When asked the age levels of household members, 23% were reported as children under twelve, 11% are teenagers between thirteen and seventeen, and 35% are sixty-five or older. The 2021 US Census Bureau reported 19% of Moscow's population was under the age of 18 and 10% of the population was over 65 years of age. Future surveys will continue to monitor these demographics to ensure a representative sample of the population.

Additionally, 14% of respondents reported that at least one member of the household had a physical disability. This is consistent with the historic average of 12%, and the US Census data at 8%. However, the census data provides estimates only for those under the age of 65.

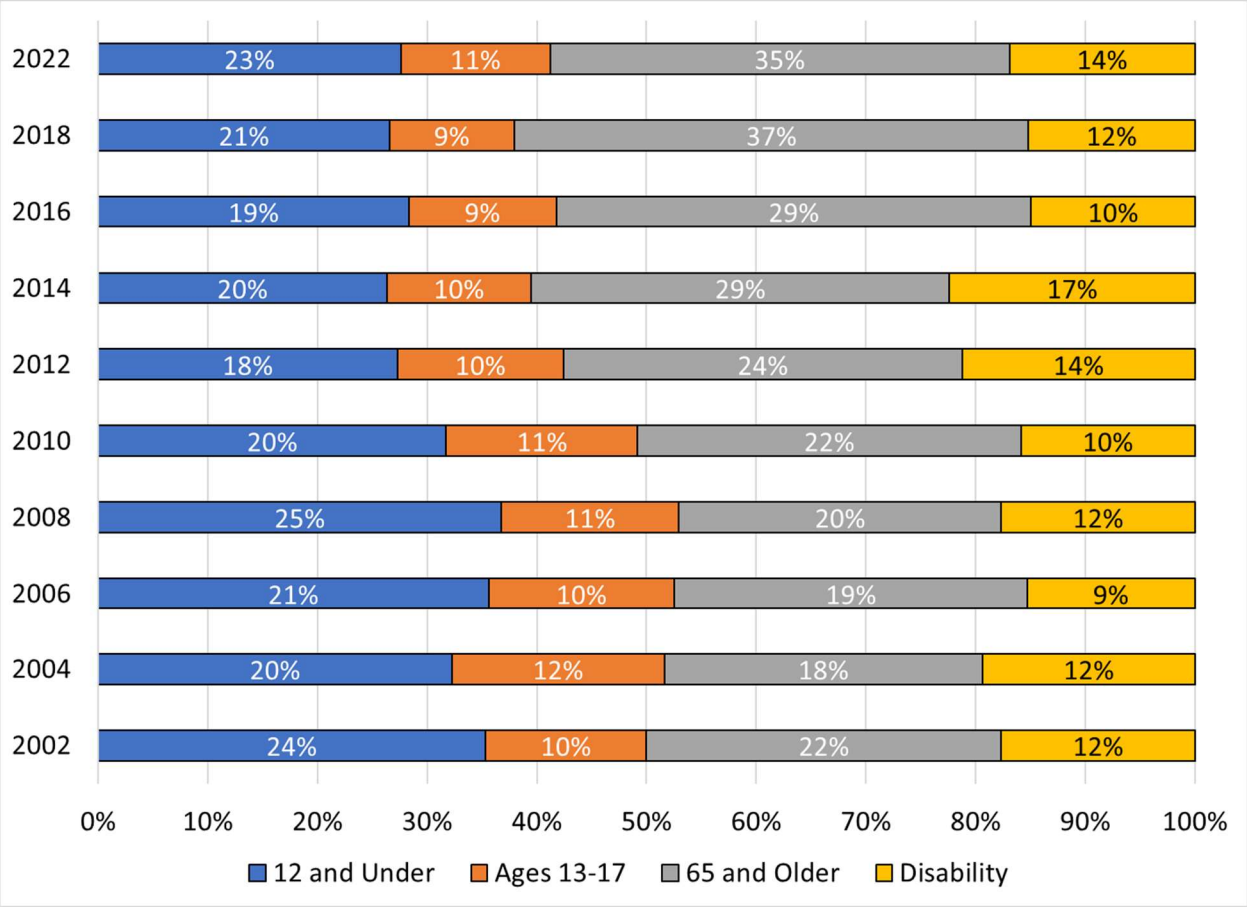

Education Level (Q26)

The educational level of Moscow's population is represented in the sample as 1% of respondents noted they do not have a high school diploma, 7% have a high school diploma, 11% note they have some college but no degree, 9% note they have an associate's degree, 30% note a bachelor's degree, and 41% reporting a graduate or professional degree. When compared to previous years all categories had a significant percentage increase with and exception in those reporting as having a bachelor's degree which decreased by four percent. The US Census Bureau reported in 2021 that 97% of the population over the age of 25 reported being a high school graduate or higher. Also, 52% of the same age group reported having a Bachelors degree or higher.

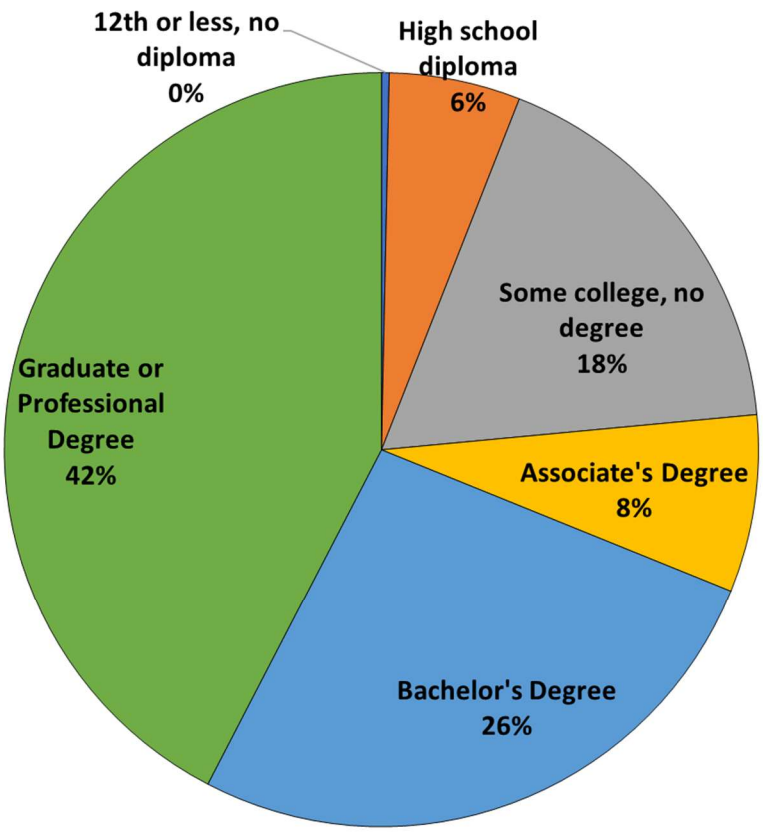

Gender (Q27)

Of the respondents in the 2022 survey, results show 49% of respondents were female and 43% were male. This year's survey offered a "Decline" or "Other" option after receiving lots of feedback from the previous survey. 1% marked Other, 6% declined to answer, and 4% did not respond. When compared to previous years women had a seven percent increase and males had a three percent increase. The US Census Bureau reported 48% of Moscow's population in 2021 were female.

Income (Q28)

A historical trend for household income is showed in the table below. The results for 2022 kept the trend consistent with the different income categories either remaining the same or slightly increasing. The category of making less than $24,999 has decreased by 17% over the last decade and those making $100,000 or more has increased by 20% while other categories have remained relatively the same.

	2002	2004	2006	2008	2010	2012	2014	2016	2018	2022
Less than $24,999	31%	34%	30%	22%	24%	27%	21%	17%	13%	14%
$25,000 to $49,999	27%	28%	27%	25%	28%	26%	23%	23%	24%	24%
$50,000 to $99,999	34%	26%	31%	37%	32%	30%	34%	33%	33%	34%
$100,000 or more	9%	11%	12%	15%	11%	13%	18%	23%	29%	29%

Race or Ethnicity (29)

Reported race or ethnicity follows the reported estimates from the US Census including 2% of respondents identifying themselves as American Indian or Alaska Native, 3% as Asian or Pacific Islander, 0% as Black or African American, 2% as Hispanic, Spanish, or Latino, 90% as White or Caucasian, and 2% noting "other." 4% of respondents chose to not answer this question.

Age (Q30)

Ages reported by respondents include the following breakdown. When compared to 2018 results there was a decrease in respondents aged 25-34, 35-44, and 65-74 years of age. Those between the ages of 18-24, 45-54, and 55-64 showed an increase. Majority of this year's surveys were filled out by those between the ages of 65 and 74. The least responsive age category was 18-24 followed by those 75 years and older.

Voter Registration & Habits (Q31 – Q35)

Respondents were asked their current registration status as well as their recent voting participation. 88% said they are registered to vote in Moscow. As a reference, general elections are held every four years and City elections are held every two years. Each City election cycle typically includes three City council positions and every other election includes the position of Mayor. Results for the 2022 survey are all at or above average for all voting questions.

	2002	2004	2006	2008	2010	2012	2014	2016	2018	2022
Registered to Vote	84%	81%	83%	87%	82%	82%	82%	86%	89%	88%
Voted in the most recent City election	55%	60%	69%	79%	65%	59%	66%	71%	84%	68%
Voted in Most Recent general election	81%	89%	81%	90%	82%	80%	80%	88%	89%	83%
Likely to vote next City election	75%	76%	83%	83%	77%	76%	81%	82%	91%	85%
Likely to vote next general election	90%	80%	90%	93%	89%	88%	88%	91%	94%	94%

Open-Ended Comments

Two questions (36 and 37) were provided for respondents to make narrative comments, which were then categorized for ease of analysis. Responses are available on the original documents which may be viewed upon request by contacting the City Clerk. Question 36 reads, "What do you feel will be the single most important issue facing the City of Moscow over the next several years?" Question 37 allows respondents to make any other comments or suggested they feel the City of Moscow needs to consider. The following is a list of the top 10 items that were mentioned.

1. Lack of available and affordable housing
2. Religious presence in the community
3. Declining aquifer and water supply
4. Rapid population and infrastructure growth
5. Increased property taxes
6. Increased downtown and highway entrance traffic
7. Lack of parking downtown
8. Street and sidewalk maintenance
9. Condition and funding of public schools
10. Pedestrian and bicyclist safety

Conclusion

Regular surveys provide City of Moscow officials with a unique opportunity to gain the perspective of the average resident of Moscow. This survey includes a representative sample of Moscow residents who do not typically participate in local government.

The 2022 Citizen Survey achieved a 26% response rate. The survey results are statistically valid and empirically defensible. A large portion of those returning the survey also completed one or both of the open-ended comment questions, providing City officials with specific, personal concerns.

Perhaps not all the right questions were asked and some important ones left out. However, the citizen survey is a dynamic document that is continually revisited. When used correctly, the biennial survey is a powerful tool for continuous improvement of the Moscow community and an important link between the citizens and City leadership.

In short, citizens are satisfied with the quality of life in Moscow; 94% felt quality of life in the community is "good" or "excellent", which has slightly decreased since the first survey conducted in 2002 and remained within 4% of previous years.

This page intentionally left blank.

2022 City of Moscow Citizen Survey

*Please complete this questionnaire if you are the adult (age 18 or older) in the household **who most recently had a birthday**. The adult's year of birth does not matter. Your responses are anonymous and will be reported in group form only.*

1. Please check the box that comes closest to your opinion of how you would rate each of the following questions:

	Excellent	Good	Neutral	Poor	Very Poor	Don't Know
a. The overall quality of life in Moscow	36%	57%	5%	1%	0%	0%
b. The overall quality of your neighborhood	33%	55%	8%	5%	0%	0%
c. Moscow as a place to raise children	41%	41%	6%	1%	0%	12%
d. Moscow as a place to live	35%	57%	6%	1%	0%	0%
e. Moscow as a place to retire	22%	38%	17%	5%	2%	14%

2. Please rate each of the following characteristics as they relate to Moscow as a whole:

	Excellent	Good	Neutral	Poor	Very Poor	Don't Know
Overall appearance of the City	19%	67%	12%	3%	0%	0%
Quality of K – 12 schools in Moscow	15%	34%	14%	5%	1%	31%
Opportunities to attend cultural activities	30%	45%	16%	3%	2%	4%
Shopping opportunities	7%	34%	31%	24%	4%	0%
Air quality	14%	57%	22%	6%	1%	0%
Recreation opportunities	23%	51%	19%	6%	1%	1%
Job opportunities	5%	43%	27%	12%	4%	9%
Access to affordable housing	2%	11%	26%	41%	15%	6%
Openness and acceptance of the community towards people of diverse backgrounds	13%	43%	24%	12%	3%	4%
Entryways to Moscow (Hwy 95 - north and south, Hwy 8 - east and west)	11%	49%	28%	11%	2%	0%

3. Please rate how safe you feel from the following occurring to you in Moscow:

	Very Safe	Fairly Safe	Not Safe or Unsafe	Somewhat Unsafe	Very Unsafe	Don't Know
Violent crimes (e.g. robbery, assault)	58%	36%	1%	3%	0%	1%
Property crimes (e.g. burglary, theft)	31%	58%	4%	5%	1%	1%
Fires	39%	49%	7%	3%	1%	2%

4. Please rate how safe you feel walking alone at night:

	Very Safe	Fairly Safe	Not Safe or Unsafe	Somewhat Unsafe	Very Unsafe	Don't Know
a. In your neighborhood	52%	40%	3%	3%	1%	1%
b. In downtown areas	42%	43%	6%	5%	1%	3%
c. In City parks outside your neighborhood	25%	44%	15%	6%	2%	9%
d. Current levels of street lighting	24%	43%	13%	13%	5%	2%

5. To what degree are the following problems in the City of Moscow:

	Extreme Problem	Major Problem	Important Problem	Minor Problem	Not a Problem	Don't Know
a. Traffic	6%	12%	32%	38%	12%	1%
b. Drug abuse	2%	7%	32%	18%	6%	35%
c. Alcohol abuse	2%	9%	26%	23%	6%	34%
d. Taxes	7%	12%	22%	22%	23%	13%
e. Loitering youth	0%	1%	7%	26%	51%	15%
f. Growth	8%	17%	34%	16%	20%	5%
g. Crime	0%	1%	21%	46%	20%	11%
h. Domestic violence	2%	5%	24%	13%	7%	48%
i. Run down houses and buildings	3%	8%	21%	46%	18%	4%

6. Please evaluate the rate of growth in the following areas in Moscow over the past 5 years:

	Much too Slow	Too Slow	Right Amount	Too Fast	Much too Fast	Don't Know
a. Population growth	0%	3%	39%	33%	13%	12%
b. Business/retail growth	5%	37%	44%	4%	0%	10%
c. Jobs growth	8%	29%	35%	1%	0%	26%

7. Please rate the following statement:

	Strongly Agree	Agree	Neutral	Disagree	Strongly Disagree	Don't Know
a. The City does a good job of planning for the growth of our community	2%	26%	31%	22%	7%	13%

8. In the last 12 months, about how many times have you or other household members done the following things:

	Once/ Never	Twice	3 – 12 Times	13 – 26 Times	> 26 Times	Don't Know
a. Used the Moscow Public Library or services	41%	10%	30%	11%	8%	0%
b. Participated in a recreation program or activity	42%	13%	31%	6%	6%	2%
c. Visited a City park	6%	9%	38%	22%	25%	0%
d. Recycled used paper, cans or bottles from your home	8%	3%	11%	14%	64%	1%
e. Volunteered your time to some group/activity in Moscow	43%	14%	18%	8%	15%	1%
f. Attended an event at the 1912 Center	45%	23%	23%	4%	3%	1%

9. How do you rate the quality of each of the following City of Moscow services:

	Excellent	Good	Neutral	Poor	Very Poor	Don't Know
a. Police services	29%	49%	12%	3%	2%	5%
b. Fire services	39%	42%	7%	1%	0%	11%
c. Emergency medical services/ambulance	33%	45%	6%	1%	1%	14%
d. Garbage collection	27%	54%	11%	6%	1%	1%
e. Recycling	26%	46%	14%	8%	3%	3%
f. Water services	21%	51%	12%	8%	4%	5%
g. Sewer services	24%	52%	13%	2%	1%	8%
h. Library services	35%	35%	9%	3%	1%	18%
i. Recreation facilities	25%	43%	15%	3%	1%	13%
j. Recreation programs and classes	15%	34%	15%	2%	2%	32%
k. Park maintenance	36%	53%	6%	1%	1%	4%
l. City parks	43%	49%	4%	1%	0%	3%
m. Street maintenance	12%	40%	24%	15%	8%	0%
n. Cleanliness of streets	16%	58%	19%	6%	1%	0%
o. Snow removal	13%	48%	17%	14%	6%	3%
p. Street lighting	10%	46%	22%	16%	4%	1%
q. Amount of public parking	6%	28%	27%	30%	8%	1%
r. Ease of car travel in the City	10%	48%	29%	10%	3%	0%
s. Enforcement of traffic laws	10%	39%	27%	8%	3%	13%
t. Planning and zoning	4%	22%	32%	14%	6%	22%
u. Sidewalk maintenance	5%	33%	28%	21%	11%	2%
v. ADA accessibility in public places	7%	26%	20%	9%	2%	36%

10. Overall, how would you rate:

	Excellent	Good	Neutral	Poor	Very Poor	Don't Know
a. The quality of services provided by the City of Moscow	15%	64%	15%	4%	0%	2%

11. What do you feel is the level of service you receive versus the amount you pay for the following:

	Excellent	Good	Neutral	Poor	Very Poor	Don't Know
a. Garbage collection	20%	49%	16%	7%	2%	6%
b. Water services	16%	42%	18%	8%	5%	10%
c. Sewer services	19%	42%	21%	6%	2%	11%
d. Parks & Recreation programs	20%	38%	16%	3%	1%	22%

12. In the <u>last 12 months</u>, about how many times have you or other household members done the following things:

	Once/ Never	Twice	3 – 12 Times	13 – 26 Times	> 26 Times	Don't Know
a. Accessed Council or Commission agendas, public hearing notices, the City Code and/or other information from the City's website	56%	14%	22%	4%	1%	3%
b. Read a legal notice in the newspaper	54%	14%	18%	8%	3%	2%
c. Attended a City Committee or Commission meeting	88%	6%	4%	2%	0%	1%
d. Provided oral or written testimony at a public meeting	96%	2%	1%	0%	0%	0%
e. Contacted the Mayor or City Supervisor regarding City policy and/or process	88%	8%	3%	0%	0%	1%
f. Contacted a City Council member regarding City policy or process	82%	12%	5%	0%	0%	1%
g. Contacted City staff regarding City policy and/or process	77%	14%	8%	0%	0%	1%
h. Watched a City Council meeting on TV	83%	10%	6%	1%	0%	0%

13. How often do you currently obtain information related to City governmental activities?

	Very Often	Often	Neutral	Rarely	Very Rarely	Don't Know
a. In person from City staff	2%	6%	5%	18%	63%	7%
b. By phone	1%	7%	5%	16%	65%	6%
c. Local newspaper	13%	25%	14%	13%	31%	4%
d. City's governmental cable channel (Channel 18)	1%	2%	5%	8%	72%	12%
e. City's website (www.ci.moscow.id.us)	9%	24%	14%	19%	28%	6%
f. City sponsored social media efforts	7%	20%	12%	11%	42%	9%

14. Please rate the following statements by checking the box that most closely represents your opinion:

	Strongly Agree	Agree	Neutral	Disagree	Strongly Disagree	Don't Know
a. I am pleased with the overall direction that the City is taking	5%	48%	24%	15%	4%	4%
b. I am well informed on major issues in the City of Moscow	7%	34%	36%	15%	5%	3%
c. The City government welcomes citizen involvement	11%	40%	23%	5%	3%	19%
d. The City considers citizen's opinion in decisions	8%	31%	24%	8%	5%	25%
e. I am well informed about City process and procedures	2%	26%	33%	20%	7%	12%
f. The City provides adequate access to public information related to governmental activities	6%	39%	25%	8%	3%	19%

The following questions are about your household. Again, all of your responses to this survey are completely anonymous and will be reported in group form only.

15. Are you currently employed?

32%	No
15%	Part-time
53%	Full-time

16. Are you currently enrolled at a local university?

88%	No
3%	Part-time
10%	Full-time

17. What one method of transportation do you usually use for the longest distance of your commute to travel to work or school?

78%	Motorized vehicle (e.g. car, truck, van, motorcycle, etc.)
7%	Bicycle
6%	Walk/Run
4%	Work at home
5%	Other:

18. If you checked the motorized vehicle box in 17, do other people (adults or children) usually ride with you to or from work?

22%	Yes	71%	No

19. How many years have you lived in Moscow?

12%	Less than 2 years
17%	2-5 years
17%	6-10 years
16%	11-20 years
38%	More than 20 years

20. How many people live in your household?

24%	1	11%	4
44%	2	5%	5
13%	3	4%	More than 5

21. Which best describes the building you live in?

63%	One family house detached from any other houses
12%	One family house attached to one or more houses (e.g. duplex or townhouse)
22%	Building with two or more apartments or condominiums
3%	Mobile home
1%	Other:

22. Do any children 12 or under live in your household?

23%	Yes	77%	No

23. Do any teenagers between 13 and 17 live in your household?

11%	Yes	89%	No

24. Are you or any other members of your household age 65 or older?

35%	Yes	65%	No

25. Does any member of your household have a physical disability?

14%	Yes	86%	No

26. What is the highest degree or level of school you have completed (mark one box):

0%	12th or less, no diploma
6%	High school diploma
18%	Some college, no degree
8%	Associate's degree (e.g. AA, AS)
26%	Bachelor's degree (e.g. BA, AB, BS)
42%	Graduate or professional degree

27. What is your gender?

49%	Female	43%	Male
1%	Other	6%	Decline

28. How much do you anticipate your household's total income before taxes will be for the current year?

14%	Less than $24,999
24%	$25,000 to $49,999
34%	$50,000 to $99,999
29%	$100,000 or more

29. What is your race or ethnicity? (Mark one or more races to indicate what race or ethnicity you consider yourself to be.)

2%	American Indian or Alaska Native
3%	Asian or Pacific Islander
0%	Black, African American
2%	Hispanic, Spanish, Latino
90%	White, Caucasian
2%	Other:

30. In which category is your age?

8%	18-24 years	14%	25-34 years
17%	35-44 years	14%	45-54 years
15%	55-64 years	21%	65-74 years
10%	75 years or older		

31. Are you registered to vote in Moscow?

88%	Yes	11%	No

32. Did you vote in the most recent City election?

68%	Yes	31%	No

33. Did you vote in the most recent general election?

83%	Yes	16%	No

34. Are you likely to vote in the next City election?

85%	Yes	14%	No

35. Are you likely to vote in the next general election?

94%	Yes	6%	No

CITY COUNCIL STAFF REPORT

DATE: Monday, February 6, 2023

AGENDA ITEM TITLE

Legislative Travel and Meetings Budget Discussion (ACTION ITEM) - Bill Belknap

RESPONSIBLE STAFF

Bill Belknap, City Supervisor

REVIEWED BY

ADDITIONAL PRESENTER(S)

OTHER RESOURCES

DESCRIPTION

Within the City's Legislative Fund budget, there is funding allocated for Council members' travel to various educational meetings and conferences. Prior to the 2021 fiscal year, the City budgeted $16,000 annually for those expenses. During the COVID-19 pandemic, there was a significant reduction in travel expenses and the budgeted amount was reduced to $10,000 annually, which was what was budgeted for the FY2023 fiscal year. Post-pandemic, Council member travel and overall travel expenses and hotel rates have increased and are likely to exceed the $10,000 budgeted amount. In addition, two Council members have expressed a desire to attend the National League of Cities Congressional City Conference that will be held in March of this year. Within FY2023, the Council has $20,000 budgeted for non-prioritized projects that could be utilized to fund the additional travel expenses. Staff would recommend an allocation of $10,000 of the non-prioritized project line item for these additional travel expenses.

STAFF RECOMMENDATION

Approve allocation of $10,000 from Legislative Non-Prioritized Projects line item 101-010-670-16 for Council travel expenses; or take other action as deemed appropriate.

PROPOSED ACTIONS

PROPOSED ACTIONS: Approve allocation of $10,000 from Legislative Non-Prioritized Projects line item 101-010-670-16 for Council travel expenses; or take other action as deemed appropriate.

FISCAL IMPACT

$10,000 from Non-Prioritized Projects line item 101-010-670-16.

PERSONNEL IMPACT

ATTACHMENTS

None